gear-1000.imi

Generated by IMITATOR 3.4-beta "Cheese Durian"
Build: develop/6908f5d
Generation time: Tue Jan 23, 2024 10:12:38

2 clocks	3 parameters	Initial
x xabs	p1 t tprime	p1 >= 0 & t >= 0 & tprime >= 0 & x = 0 & xabs = 0

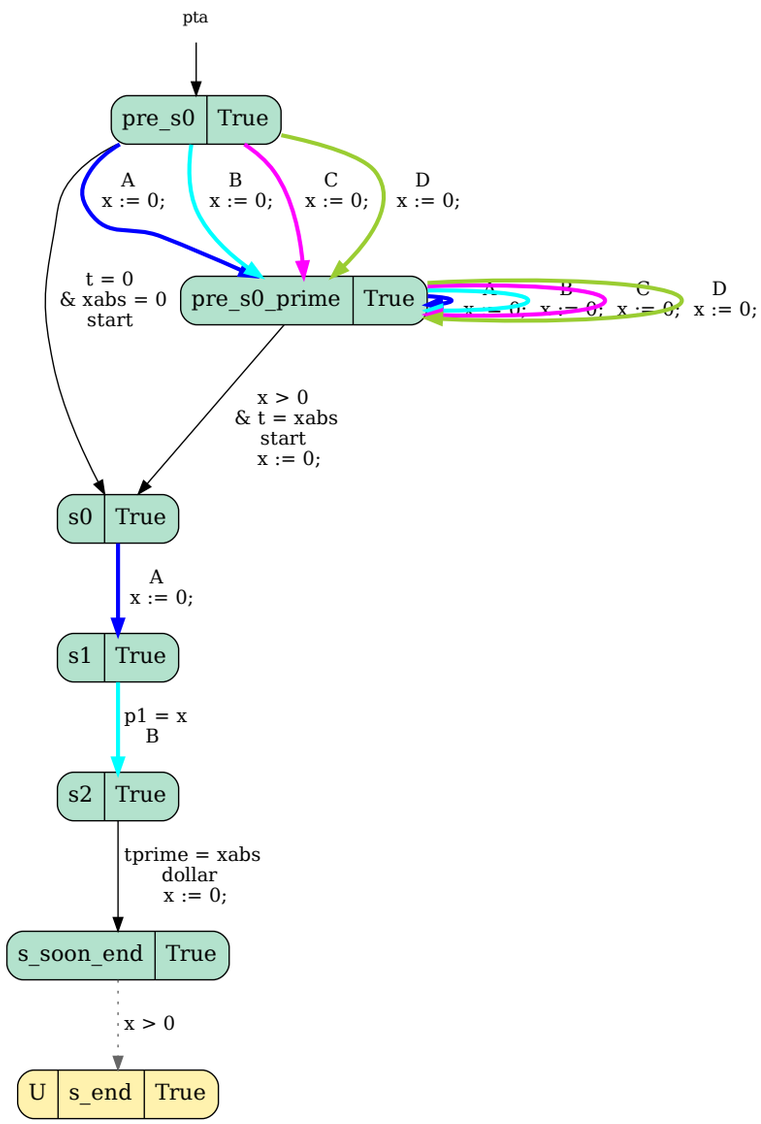

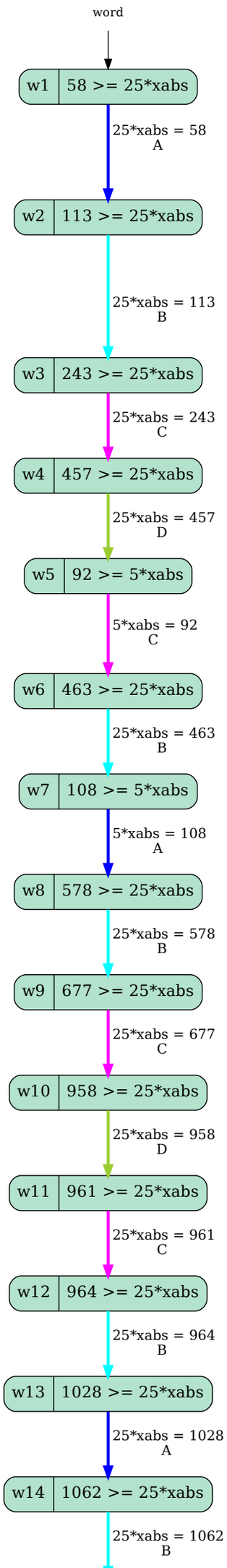

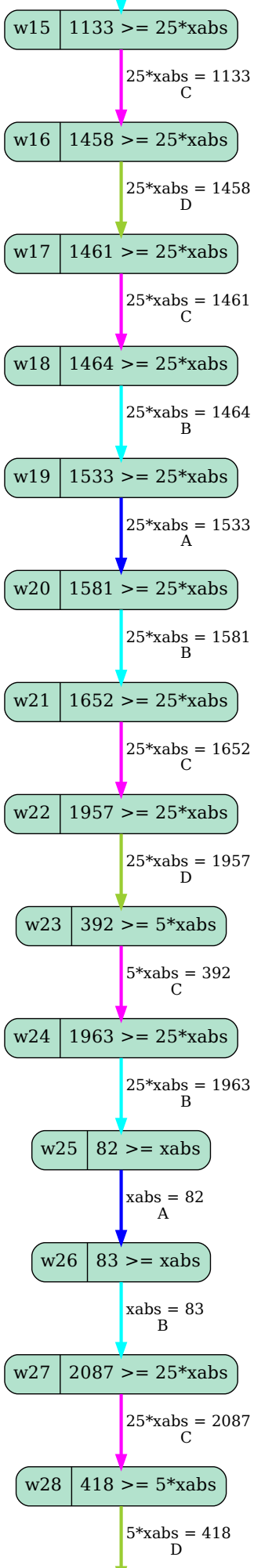
w15
1133 >= 25*xabs
25*xabs = 1133
C
w16
1458 >= 25*xabs
25*xabs = 1458
D
w17
1461 >= 25*xabs
25*xabs = 1461
C
w18
1464 >= 25*xabs
25*xabs = 1464
B
w19
1533 >= 25*xabs
25*xabs = 1533
A
w20
1581 >= 25*xabs
25*xabs = 1581
B
w21
1652 >= 25*xabs
25*xabs = 1652
C
w22
1957 >= 25*xabs
25*xabs = 1957
D
w23
392 >= 5*xabs
5*xabs = 392
C
w24
1963 >= 25*xabs
25*xabs = 1963
B
w25
82 >= xabs
xabs = 82
A
w26
83 >= xabs
xabs = 83
B
w27
2087 >= 25*xabs
25*xabs = 2087
C
w28
418 >= 5*xabs
5*xabs = 418
D

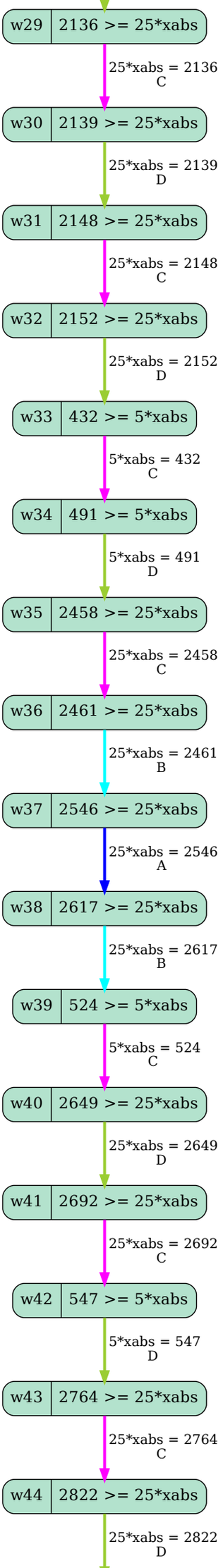
w29
2136 >= 25*xabs
25*xabs = 2136
C
w30
2139 >= 25*xabs
25*xabs = 2139
D
w31
2148 >= 25*xabs
25*xabs = 2148
C
w32
2152 >= 25*xabs
25*xabs = 2152
D
w33
432 >= 5*xabs
5*xabs = 432
C
w34
491 >= 5*xabs
5*xabs = 491
D
w35
2458 >= 25*xabs
25*xabs = 2458
C
w36
2461 >= 25*xabs
25*xabs = 2461
B
w37
2546 >= 25*xabs
25*xabs = 2546
A
w38
2617 >= 25*xabs
25*xabs = 2617
B
w39
524 >= 5*xabs
5*xabs = 524
C
w40
2649 >= 25*xabs
25*xabs = 2649
D
w41
2692 >= 25*xabs
25*xabs = 2692
C
w42
547 >= 5*xabs
5*xabs = 547
D
w43
2764 >= 25*xabs
25*xabs = 2764
C
w44
2822 >= 25*xabs
25*xabs = 2822
D

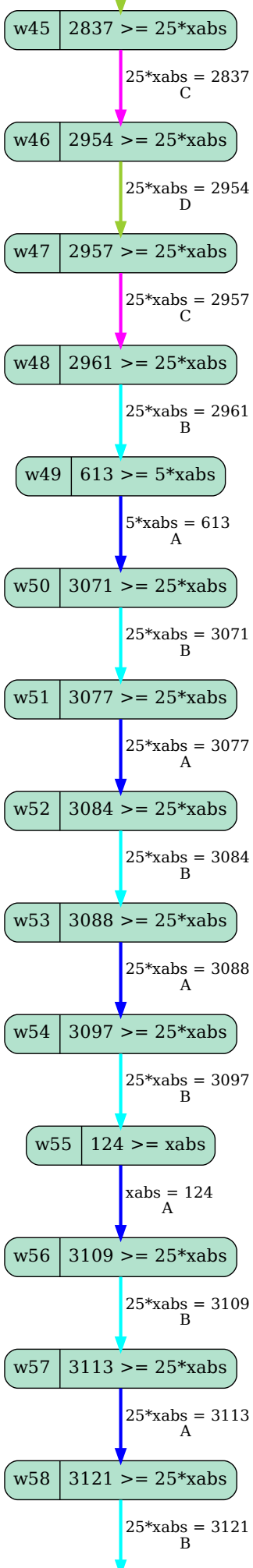
w45
2837 >= 25*xabs
25*xabs = 2837
C
w46
2954 >= 25*xabs
25*xabs = 2954
D
w47
2957 >= 25*xabs
25*xabs = 2957
C
w48
2961 >= 25*xabs
25*xabs = 2961
B
w49
613 >= 5*xabs
5*xabs = 613
A
w50
3071 >= 25*xabs
25*xabs = 3071
B
w51
3077 >= 25*xabs
25*xabs = 3077
A
w52
3084 >= 25*xabs
25*xabs = 3084
B
w53
3088 >= 25*xabs
25*xabs = 3088
A
w54
3097 >= 25*xabs
25*xabs = 3097
B
w55
124 >= xabs
xabs = 124
A
w56
3109 >= 25*xabs
25*xabs = 3109
B
w57
3113 >= 25*xabs
25*xabs = 3113
A
w58
3121 >= 25*xabs
25*xabs = 3121
B

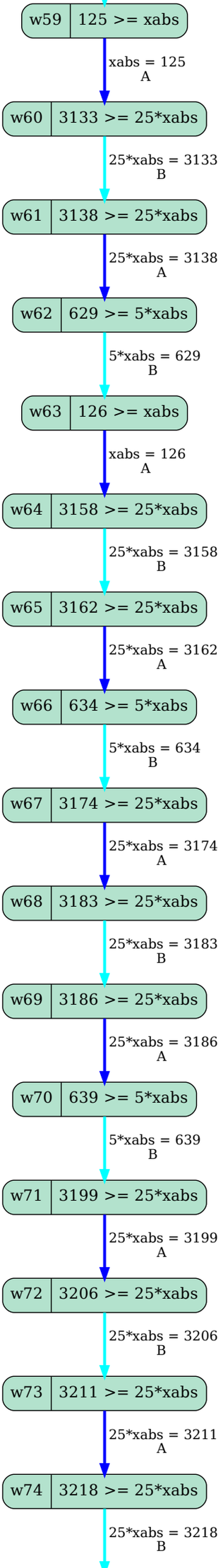
w59
125 >= xabs
xabs = 125
A
w60
3133 >= 25*xabs
25*xabs = 3133
B
w61
3138 >= 25*xabs
25*xabs = 3138
A
w62
629 >= 5*xabs
5*xabs = 629
B
w63
126 >= xabs
xabs = 126
A
w64
3158 >= 25*xabs
25*xabs = 3158
B
w65
3162 >= 25*xabs
25*xabs = 3162
A
w66
634 >= 5*xabs
5*xabs = 634
B
w67
3174 >= 25*xabs
25*xabs = 3174
A
w68
3183 >= 25*xabs
25*xabs = 3183
B
w69
3186 >= 25*xabs
25*xabs = 3186
A
w70
639 >= 5*xabs
5*xabs = 639
B
w71
3199 >= 25*xabs
25*xabs = 3199
A
w72
3206 >= 25*xabs
25*xabs = 3206
B
w73
3211 >= 25*xabs
25*xabs = 3211
A
w74
3218 >= 25*xabs
25*xabs = 3218
B

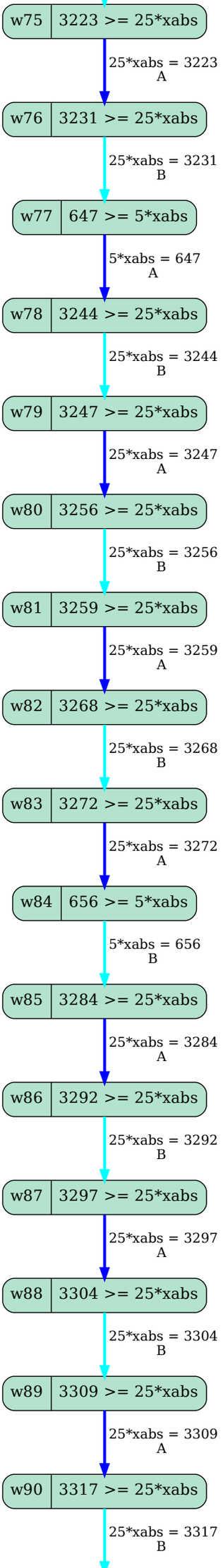
w75
3223 >= 25*xabs
25*xabs = 3223
A
w76
3231 >= 25*xabs
25*xabs = 3231
B
w77
647 >= 5*xabs
5*xabs = 647
A
w78
3244 >= 25*xabs
25*xabs = 3244
B
w79
3247 >= 25*xabs
25*xabs = 3247
A
w80
3256 >= 25*xabs
25*xabs = 3256
B
w81
3259 >= 25*xabs
25*xabs = 3259
A
w82
3268 >= 25*xabs
25*xabs = 3268
B
w83
3272 >= 25*xabs
25*xabs = 3272
A
w84
656 >= 5*xabs
5*xabs = 656
B
w85
3284 >= 25*xabs
25*xabs = 3284
A
w86
3292 >= 25*xabs
25*xabs = 3292
B
w87
3297 >= 25*xabs
25*xabs = 3297
A
w88
3304 >= 25*xabs
25*xabs = 3304
B
w89
3309 >= 25*xabs
25*xabs = 3309
A
w90
3317 >= 25*xabs
25*xabs = 3317
B

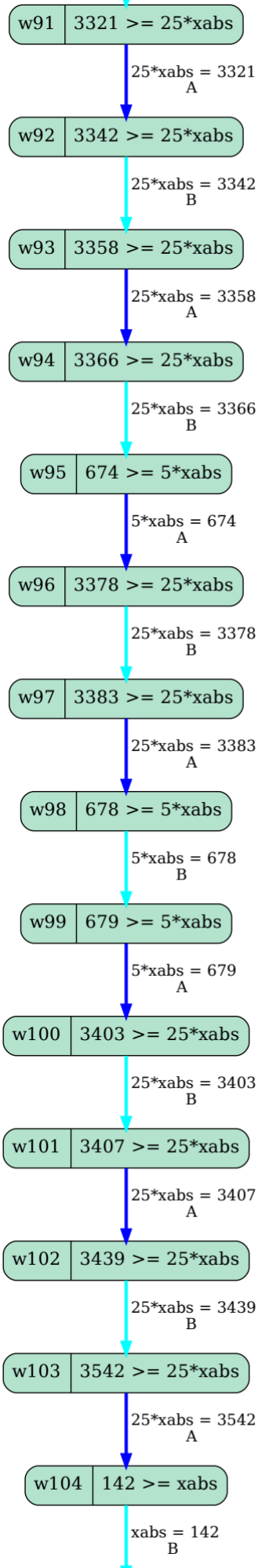
w91
3321 >= 25*xabs
25*xabs = 3321
A
w92
3342 >= 25*xabs
25*xabs = 3342
B
w93
3358 >= 25*xabs
25*xabs = 3358
A
w94
3366 >= 25*xabs
25*xabs = 3366
B
w95
674 >= 5*xabs
5*xabs = 674
A
w96
3378 >= 25*xabs
25*xabs = 3378
B
w97
3383 >= 25*xabs
25*xabs = 3383
A
w98
678 >= 5*xabs
5*xabs = 678
B
w99
679 >= 5*xabs
5*xabs = 679
A
w100
3403 >= 25*xabs
25*xabs = 3403
B
w101
3407 >= 25*xabs
25*xabs = 3407
A
w102
3439 >= 25*xabs
25*xabs = 3439
B
w103
3542 >= 25*xabs
25*xabs = 3542
A
w104
142 >= xabs
xabs = 142
B

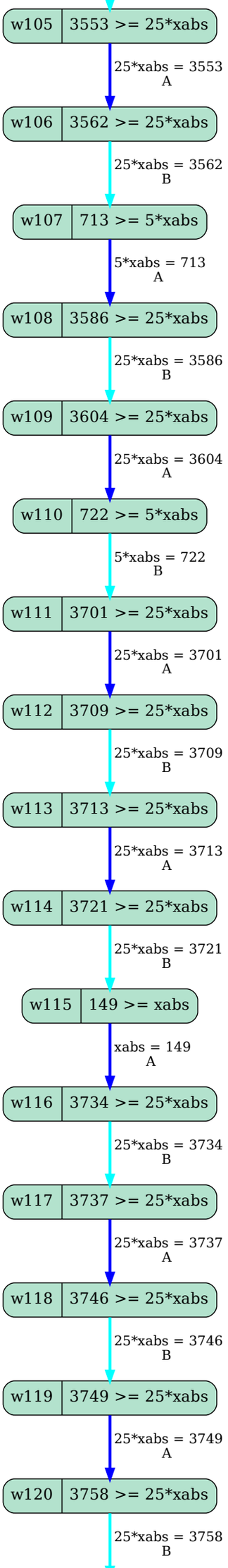
w105
3553 >= 25*xabs
25*xabs = 3553
A
w106
3562 >= 25*xabs
25*xabs = 3562
B
w107
713 >= 5*xabs
5*xabs = 713
A
w108
3586 >= 25*xabs
25*xabs = 3586
B
w109
3604 >= 25*xabs
25*xabs = 3604
A
w110
722 >= 5*xabs
5*xabs = 722
B
w111
3701 >= 25*xabs
25*xabs = 3701
A
w112
3709 >= 25*xabs
25*xabs = 3709
B
w113
3713 >= 25*xabs
25*xabs = 3713
A
w114
3721 >= 25*xabs
25*xabs = 3721
B
w115
149 >= xabs
xabs = 149
A
w116
3734 >= 25*xabs
25*xabs = 3734
B
w117
3737 >= 25*xabs
25*xabs = 3737
A
w118
3746 >= 25*xabs
25*xabs = 3746
B
w119
3749 >= 25*xabs
25*xabs = 3749
A
w120
3758 >= 25*xabs
25*xabs = 3758
B

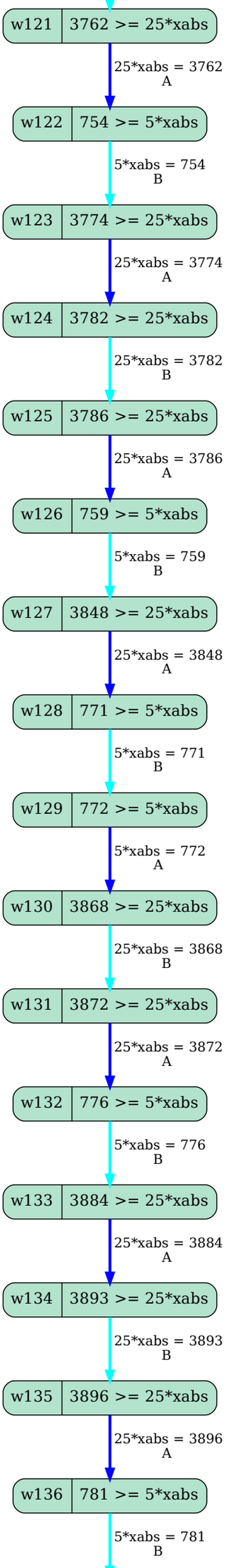
w121
3762 >= 25*xabs
25*xabs = 3762
A
w122
754 >= 5*xabs
5*xabs = 754
B
w123
3774 >= 25*xabs
25*xabs = 3774
A
w124
3782 >= 25*xabs
25*xabs = 3782
B
w125
3786 >= 25*xabs
25*xabs = 3786
A
w126
759 >= 5*xabs
5*xabs = 759
B
w127
3848 >= 25*xabs
25*xabs = 3848
A
w128
771 >= 5*xabs
5*xabs = 771
B
w129
772 >= 5*xabs
5*xabs = 772
A
w130
3868 >= 25*xabs
25*xabs = 3868
B
w131
3872 >= 25*xabs
25*xabs = 3872
A
w132
776 >= 5*xabs
5*xabs = 776
B
w133
3884 >= 25*xabs
25*xabs = 3884
A
w134
3893 >= 25*xabs
25*xabs = 3893
B
w135
3896 >= 25*xabs
25*xabs = 3896
A
w136
781 >= 5*xabs
5*xabs = 781
B

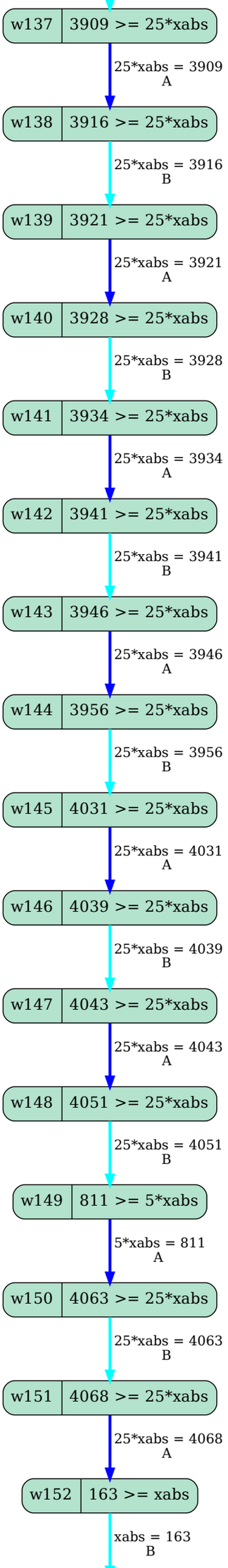
w137
3909 >= 25*xabs
25*xabs = 3909
A
w138
3916 >= 25*xabs
25*xabs = 3916
B
w139
3921 >= 25*xabs
25*xabs = 3921
A
w140
3928 >= 25*xabs
25*xabs = 3928
B
w141
3934 >= 25*xabs
25*xabs = 3934
A
w142
3941 >= 25*xabs
25*xabs = 3941
B
w143
3946 >= 25*xabs
25*xabs = 3946
A
w144
3956 >= 25*xabs
25*xabs = 3956
B
w145
4031 >= 25*xabs
25*xabs = 4031
A
w146
4039 >= 25*xabs
25*xabs = 4039
B
w147
4043 >= 25*xabs
25*xabs = 4043
A
w148
4051 >= 25*xabs
25*xabs = 4051
B
w149
811 >= 5*xabs
5*xabs = 811
A
w150
4063 >= 25*xabs
25*xabs = 4063
B
w151
4068 >= 25*xabs
25*xabs = 4068
A
w152
163 >= xabs
xabs = 163
B

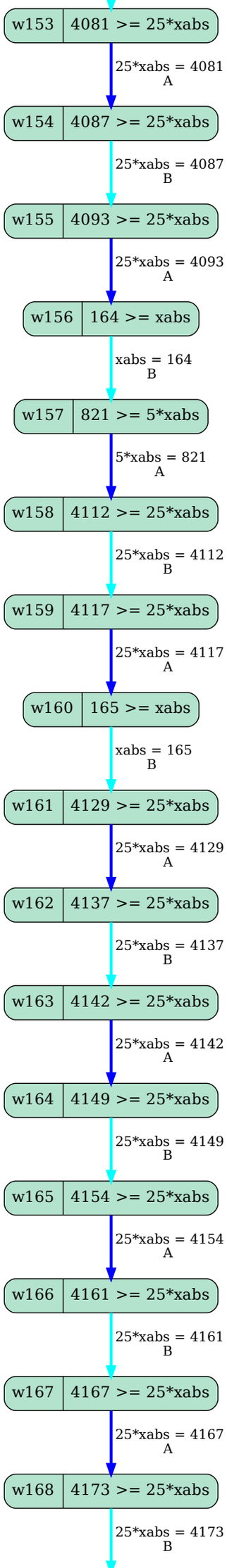
w153
4081 >= 25*xabs
25*xabs = 4081
A
w154
4087 >= 25*xabs
25*xabs = 4087
B
w155
4093 >= 25*xabs
25*xabs = 4093
A
w156
164 >= xabs
xabs = 164
B
w157
821 >= 5*xabs
5*xabs = 821
A
w158
4112 >= 25*xabs
25*xabs = 4112
B
w159
4117 >= 25*xabs
25*xabs = 4117
A
w160
165 >= xabs
xabs = 165
B
w161
4129 >= 25*xabs
25*xabs = 4129
A
w162
4137 >= 25*xabs
25*xabs = 4137
B
w163
4142 >= 25*xabs
25*xabs = 4142
A
w164
4149 >= 25*xabs
25*xabs = 4149
B
w165
4154 >= 25*xabs
25*xabs = 4154
A
w166
4161 >= 25*xabs
25*xabs = 4161
B
w167
4167 >= 25*xabs
25*xabs = 4167
A
w168
4173 >= 25*xabs
25*xabs = 4173
B

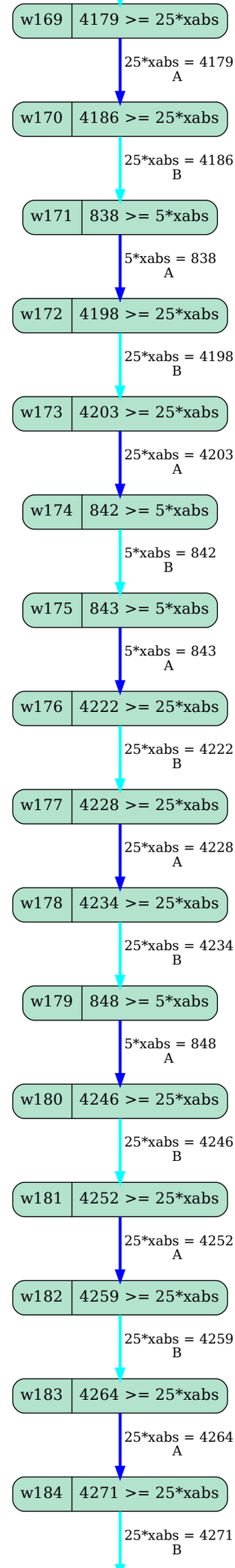
w169
4179 >= 25*xabs
25*xabs = 4179
A
w170
4186 >= 25*xabs
25*xabs = 4186
B
w171
838 >= 5*xabs
5*xabs = 838
A
w172
4198 >= 25*xabs
25*xabs = 4198
B
w173
4203 >= 25*xabs
25*xabs = 4203
A
w174
842 >= 5*xabs
5*xabs = 842
B
w175
843 >= 5*xabs
5*xabs = 843
A
w176
4222 >= 25*xabs
25*xabs = 4222
B
w177
4228 >= 25*xabs
25*xabs = 4228
A
w178
4234 >= 25*xabs
25*xabs = 4234
B
w179
848 >= 5*xabs
5*xabs = 848
A
w180
4246 >= 25*xabs
25*xabs = 4246
B
w181
4252 >= 25*xabs
25*xabs = 4252
A
w182
4259 >= 25*xabs
25*xabs = 4259
B
w183
4264 >= 25*xabs
25*xabs = 4264
A
w184
4271 >= 25*xabs
25*xabs = 4271
B

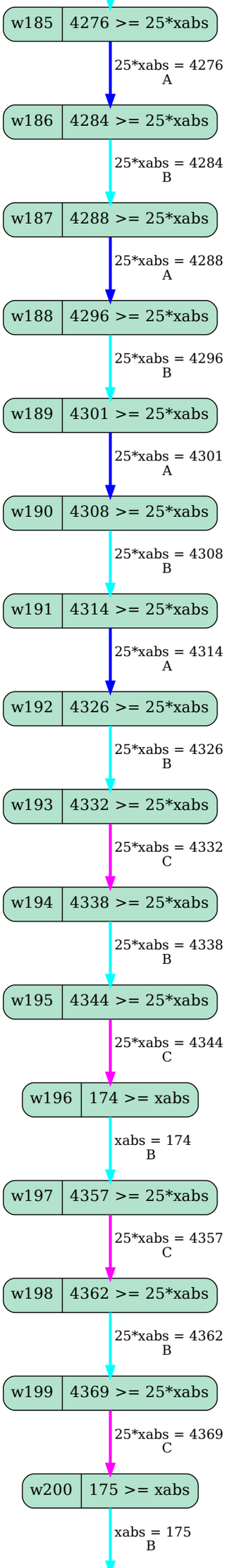
w185
4276 >= 25*xabs
25*xabs = 4276
A
w186
4284 >= 25*xabs
25*xabs = 4284
B
w187
4288 >= 25*xabs
25*xabs = 4288
A
w188
4296 >= 25*xabs
25*xabs = 4296
B
w189
4301 >= 25*xabs
25*xabs = 4301
A
w190
4308 >= 25*xabs
25*xabs = 4308
B
w191
4314 >= 25*xabs
25*xabs = 4314
A
w192
4326 >= 25*xabs
25*xabs = 4326
B
w193
4332 >= 25*xabs
25*xabs = 4332
C
w194
4338 >= 25*xabs
25*xabs = 4338
B
w195
4344 >= 25*xabs
25*xabs = 4344
C
w196
174 >= xabs
xabs = 174
B
w197
4357 >= 25*xabs
25*xabs = 4357
C
w198
4362 >= 25*xabs
25*xabs = 4362
B
w199
4369 >= 25*xabs
25*xabs = 4369
C
w200
175 >= xabs
xabs = 175
B

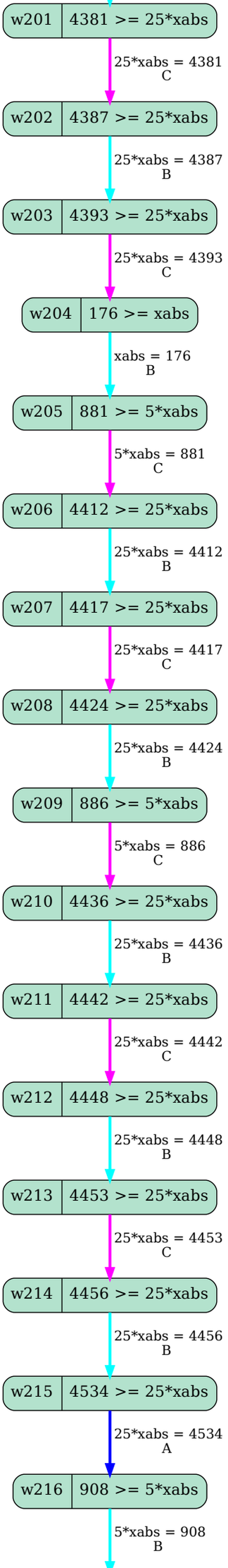
w201
4381 >= 25*xabs
25*xabs = 4381
C
w202
4387 >= 25*xabs
25*xabs = 4387
B
w203
4393 >= 25*xabs
25*xabs = 4393
C
w204
176 >= xabs
xabs = 176
B
w205
881 >= 5*xabs
5*xabs = 881
C
w206
4412 >= 25*xabs
25*xabs = 4412
B
w207
4417 >= 25*xabs
25*xabs = 4417
C
w208
4424 >= 25*xabs
25*xabs = 4424
B
w209
886 >= 5*xabs
5*xabs = 886
C
w210
4436 >= 25*xabs
25*xabs = 4436
B
w211
4442 >= 25*xabs
25*xabs = 4442
C
w212
4448 >= 25*xabs
25*xabs = 4448
B
w213
4453 >= 25*xabs
25*xabs = 4453
C
w214
4456 >= 25*xabs
25*xabs = 4456
B
w215
4534 >= 25*xabs
25*xabs = 4534
A
w216
908 >= 5*xabs
5*xabs = 908
B

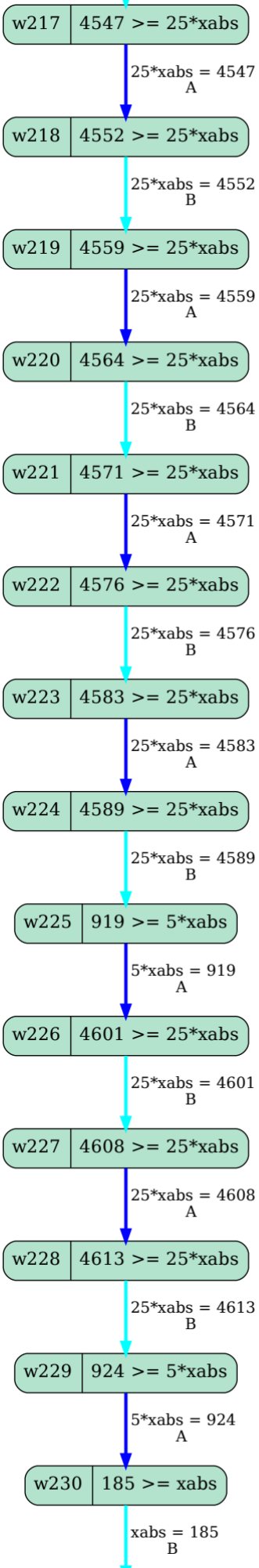
w217
4547 >= 25*xabs
25*xabs = 4547
A
w218
4552 >= 25*xabs
25*xabs = 4552
B
w219
4559 >= 25*xabs
25*xabs = 4559
A
w220
4564 >= 25*xabs
25*xabs = 4564
B
w221
4571 >= 25*xabs
25*xabs = 4571
A
w222
4576 >= 25*xabs
25*xabs = 4576
B
w223
4583 >= 25*xabs
25*xabs = 4583
A
w224
4589 >= 25*xabs
25*xabs = 4589
B
w225
919 >= 5*xabs
5*xabs = 919
A
w226
4601 >= 25*xabs
25*xabs = 4601
B
w227
4608 >= 25*xabs
25*xabs = 4608
A
w228
4613 >= 25*xabs
25*xabs = 4613
B
w229
924 >= 5*xabs
5*xabs = 924
A
w230
185 >= xabs
xabs = 185
B

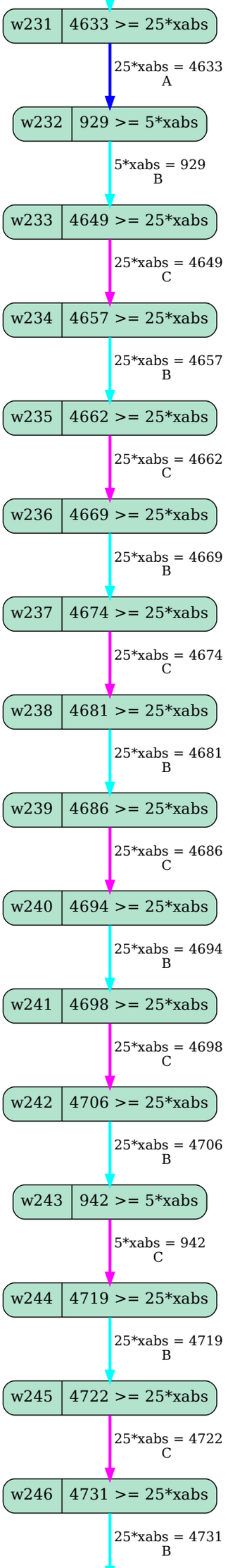
w231
4633 >= 25*xabs
25*xabs = 4633
A
w232
929 >= 5*xabs
5*xabs = 929
B
w233
4649 >= 25*xabs
25*xabs = 4649
C
w234
4657 >= 25*xabs
25*xabs = 4657
B
w235
4662 >= 25*xabs
25*xabs = 4662
C
w236
4669 >= 25*xabs
25*xabs = 4669
B
w237
4674 >= 25*xabs
25*xabs = 4674
C
w238
4681 >= 25*xabs
25*xabs = 4681
B
w239
4686 >= 25*xabs
25*xabs = 4686
C
w240
4694 >= 25*xabs
25*xabs = 4694
B
w241
4698 >= 25*xabs
25*xabs = 4698
C
w242
4706 >= 25*xabs
25*xabs = 4706
B
w243
942 >= 5*xabs
5*xabs = 942
C
w244
4719 >= 25*xabs
25*xabs = 4719
B
w245
4722 >= 25*xabs
25*xabs = 4722
C
w246
4731 >= 25*xabs
25*xabs = 4731
B

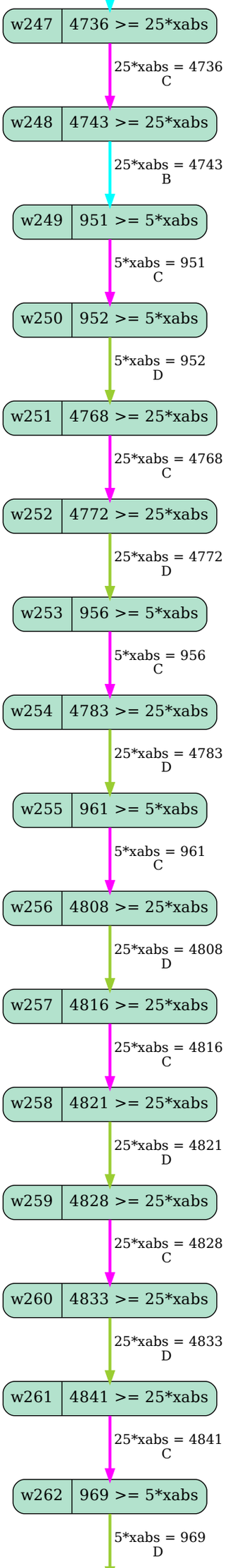
w247
4736 >= 25*xabs
25*xabs = 4736
C
w248
4743 >= 25*xabs
25*xabs = 4743
B
w249
951 >= 5*xabs
5*xabs = 951
C
w250
952 >= 5*xabs
5*xabs = 952
D
w251
4768 >= 25*xabs
25*xabs = 4768
C
w252
4772 >= 25*xabs
25*xabs = 4772
D
w253
956 >= 5*xabs
5*xabs = 956
C
w254
4783 >= 25*xabs
25*xabs = 4783
D
w255
961 >= 5*xabs
5*xabs = 961
C
w256
4808 >= 25*xabs
25*xabs = 4808
D
w257
4816 >= 25*xabs
25*xabs = 4816
C
w258
4821 >= 25*xabs
25*xabs = 4821
D
w259
4828 >= 25*xabs
25*xabs = 4828
C
w260
4833 >= 25*xabs
25*xabs = 4833
D
w261
4841 >= 25*xabs
25*xabs = 4841
C
w262
969 >= 5*xabs
5*xabs = 969
D

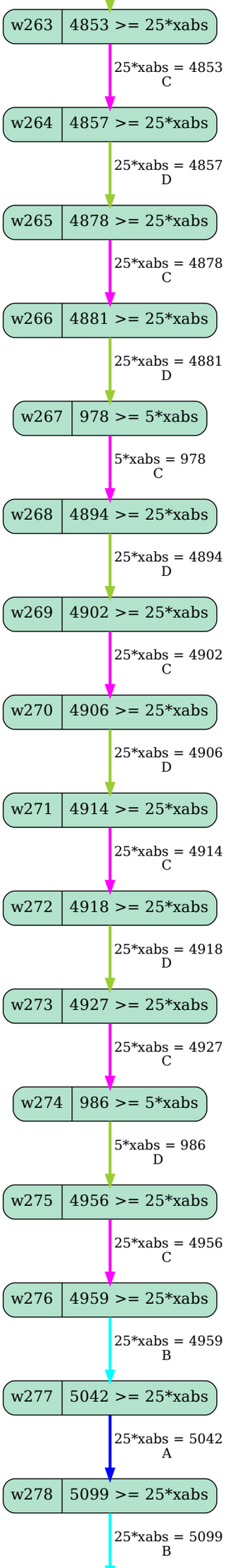
w263
4853 >= 25*xabs
25*xabs = 4853
C
w264
4857 >= 25*xabs
25*xabs = 4857
D
w265
4878 >= 25*xabs
25*xabs = 4878
C
w266
4881 >= 25*xabs
25*xabs = 4881
D
w267
978 >= 5*xabs
5*xabs = 978
C
w268
4894 >= 25*xabs
25*xabs = 4894
D
w269
4902 >= 25*xabs
25*xabs = 4902
C
w270
4906 >= 25*xabs
25*xabs = 4906
D
w271
4914 >= 25*xabs
25*xabs = 4914
C
w272
4918 >= 25*xabs
25*xabs = 4918
D
w273
4927 >= 25*xabs
25*xabs = 4927
C
w274
986 >= 5*xabs
5*xabs = 986
D
w275
4956 >= 25*xabs
25*xabs = 4956
C
w276
4959 >= 25*xabs
25*xabs = 4959
B
w277
5042 >= 25*xabs
25*xabs = 5042
A
w278
5099 >= 25*xabs
25*xabs = 5099
B

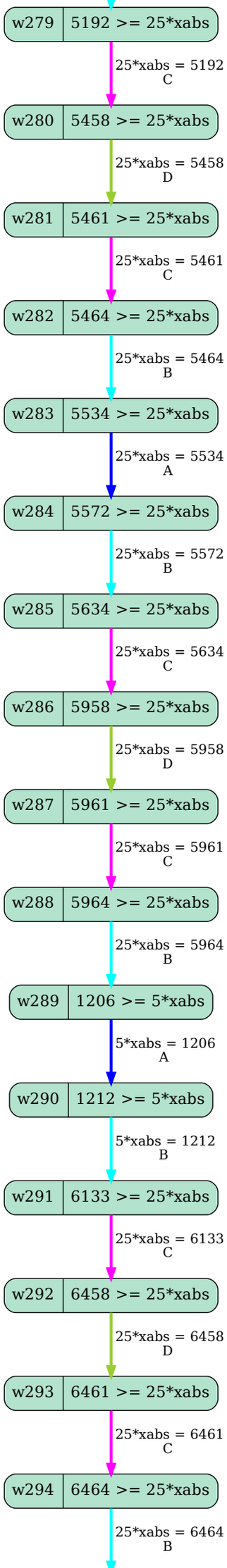
w279
5192 >= 25*xabs
25*xabs = 5192
C
w280
5458 >= 25*xabs
25*xabs = 5458
D
w281
5461 >= 25*xabs
25*xabs = 5461
C
w282
5464 >= 25*xabs
25*xabs = 5464
B
w283
5534 >= 25*xabs
25*xabs = 5534
A
w284
5572 >= 25*xabs
25*xabs = 5572
B
w285
5634 >= 25*xabs
25*xabs = 5634
C
w286
5958 >= 25*xabs
25*xabs = 5958
D
w287
5961 >= 25*xabs
25*xabs = 5961
C
w288
5964 >= 25*xabs
25*xabs = 5964
B
w289
1206 >= 5*xabs
5*xabs = 1206
A
w290
1212 >= 5*xabs
5*xabs = 1212
B
w291
6133 >= 25*xabs
25*xabs = 6133
C
w292
6458 >= 25*xabs
25*xabs = 6458
D
w293
6461 >= 25*xabs
25*xabs = 6461
C
w294
6464 >= 25*xabs
25*xabs = 6464
B

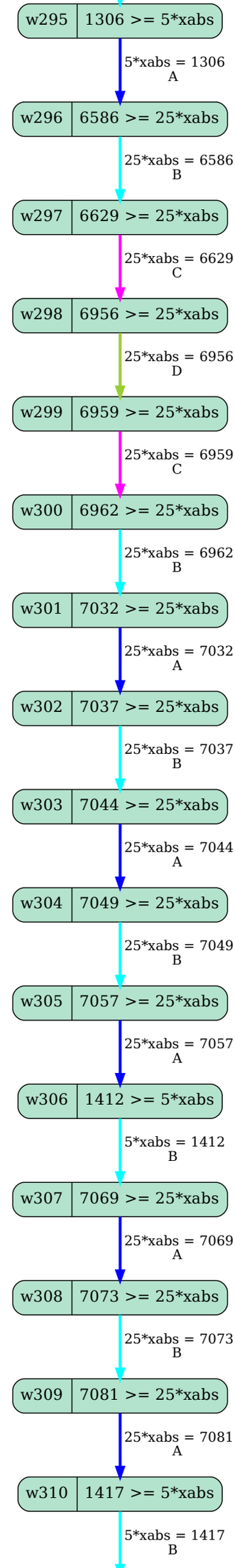
w295
1306 >= 5*xabs
5*xabs = 1306
A
w296
6586 >= 25*xabs
25*xabs = 6586
B
w297
6629 >= 25*xabs
25*xabs = 6629
C
w298
6956 >= 25*xabs
25*xabs = 6956
D
w299
6959 >= 25*xabs
25*xabs = 6959
C
w300
6962 >= 25*xabs
25*xabs = 6962
B
w301
7032 >= 25*xabs
25*xabs = 7032
A
w302
7037 >= 25*xabs
25*xabs = 7037
B
w303
7044 >= 25*xabs
25*xabs = 7044
A
w304
7049 >= 25*xabs
25*xabs = 7049
B
w305
7057 >= 25*xabs
25*xabs = 7057
A
w306
1412 >= 5*xabs
5*xabs = 1412
B
w307
7069 >= 25*xabs
25*xabs = 7069
A
w308
7073 >= 25*xabs
25*xabs = 7073
B
w309
7081 >= 25*xabs
25*xabs = 7081
A
w310
1417 >= 5*xabs
5*xabs = 1417
B

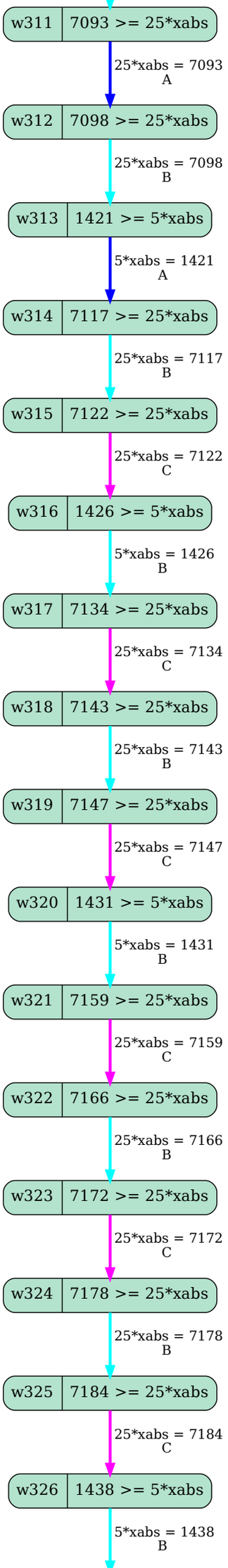
w311
7093 >= 25*xabs
25*xabs = 7093
A
w312
7098 >= 25*xabs
25*xabs = 7098
B
w313
1421 >= 5*xabs
5*xabs = 1421
A
w314
7117 >= 25*xabs
25*xabs = 7117
B
w315
7122 >= 25*xabs
25*xabs = 7122
C
w316
1426 >= 5*xabs
5*xabs = 1426
B
w317
7134 >= 25*xabs
25*xabs = 7134
C
w318
7143 >= 25*xabs
25*xabs = 7143
B
w319
7147 >= 25*xabs
25*xabs = 7147
C
w320
1431 >= 5*xabs
5*xabs = 1431
B
w321
7159 >= 25*xabs
25*xabs = 7159
C
w322
7166 >= 25*xabs
25*xabs = 7166
B
w323
7172 >= 25*xabs
25*xabs = 7172
C
w324
7178 >= 25*xabs
25*xabs = 7178
B
w325
7184 >= 25*xabs
25*xabs = 7184
C
w326
1438 >= 5*xabs
5*xabs = 1438
B

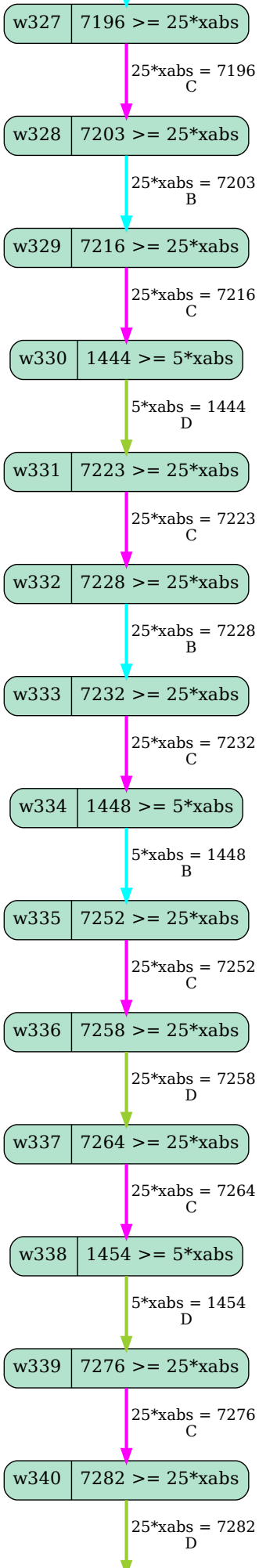
w327
7196 >= 25*xabs
25*xabs = 7196
C
w328
7203 >= 25*xabs
25*xabs = 7203
B
w329
7216 >= 25*xabs
25*xabs = 7216
C
w330
1444 >= 5*xabs
5*xabs = 1444
D
w331
7223 >= 25*xabs
25*xabs = 7223
C
w332
7228 >= 25*xabs
25*xabs = 7228
B
w333
7232 >= 25*xabs
25*xabs = 7232
C
w334
1448 >= 5*xabs
5*xabs = 1448
B
w335
7252 >= 25*xabs
25*xabs = 7252
C
w336
7258 >= 25*xabs
25*xabs = 7258
D
w337
7264 >= 25*xabs
25*xabs = 7264
C
w338
1454 >= 5*xabs
5*xabs = 1454
D
w339
7276 >= 25*xabs
25*xabs = 7276
C
w340
7282 >= 25*xabs
25*xabs = 7282
D

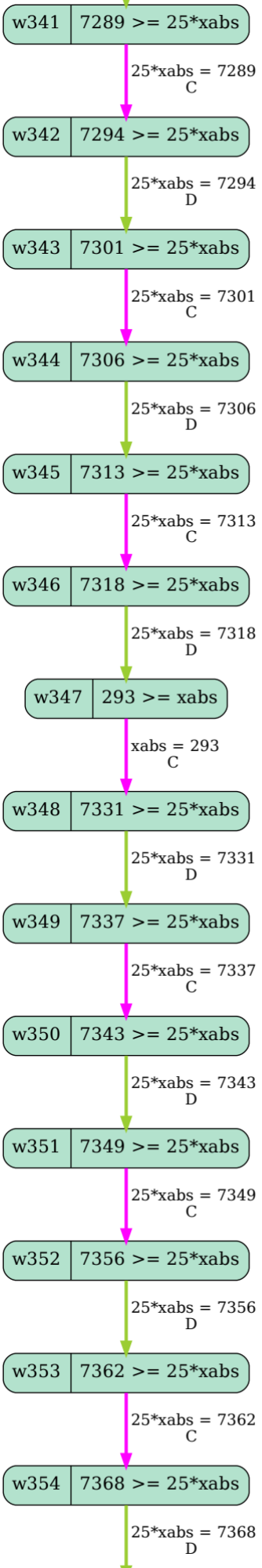
w341
7289 >= 25*xabs
25*xabs = 7289
C
w342
7294 >= 25*xabs
25*xabs = 7294
D
w343
7301 >= 25*xabs
25*xabs = 7301
C
w344
7306 >= 25*xabs
25*xabs = 7306
D
w345
7313 >= 25*xabs
25*xabs = 7313
C
w346
7318 >= 25*xabs
25*xabs = 7318
D
w347
293 >= xabs
xabs = 293
C
w348
7331 >= 25*xabs
25*xabs = 7331
D
w349
7337 >= 25*xabs
25*xabs = 7337
C
w350
7343 >= 25*xabs
25*xabs = 7343
D
w351
7349 >= 25*xabs
25*xabs = 7349
C
w352
7356 >= 25*xabs
25*xabs = 7356
D
w353
7362 >= 25*xabs
25*xabs = 7362
C
w354
7368 >= 25*xabs
25*xabs = 7368
D

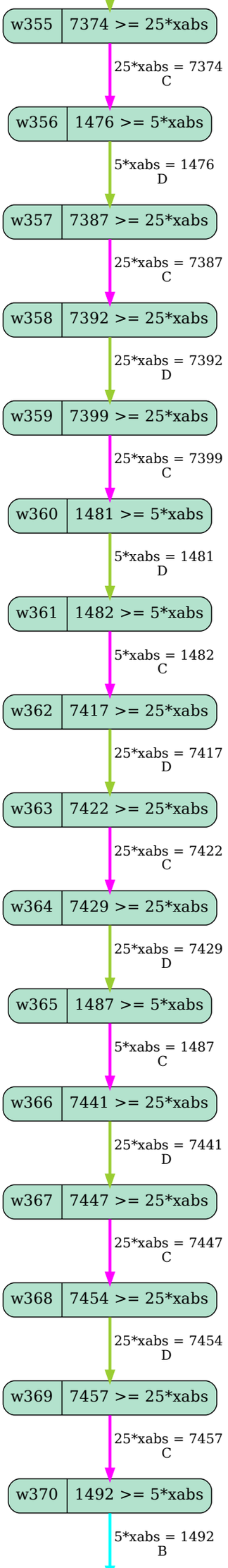
w355
7374 >= 25*xabs
25*xabs = 7374
C
w356
1476 >= 5*xabs
5*xabs = 1476
D
w357
7387 >= 25*xabs
25*xabs = 7387
C
w358
7392 >= 25*xabs
25*xabs = 7392
D
w359
7399 >= 25*xabs
25*xabs = 7399
C
w360
1481 >= 5*xabs
5*xabs = 1481
D
w361
1482 >= 5*xabs
5*xabs = 1482
C
w362
7417 >= 25*xabs
25*xabs = 7417
D
w363
7422 >= 25*xabs
25*xabs = 7422
C
w364
7429 >= 25*xabs
25*xabs = 7429
D
w365
1487 >= 5*xabs
5*xabs = 1487
C
w366
7441 >= 25*xabs
25*xabs = 7441
D
w367
7447 >= 25*xabs
25*xabs = 7447
C
w368
7454 >= 25*xabs
25*xabs = 7454
D
w369
7457 >= 25*xabs
25*xabs = 7457
C
w370
1492 >= 5*xabs
5*xabs = 1492
B

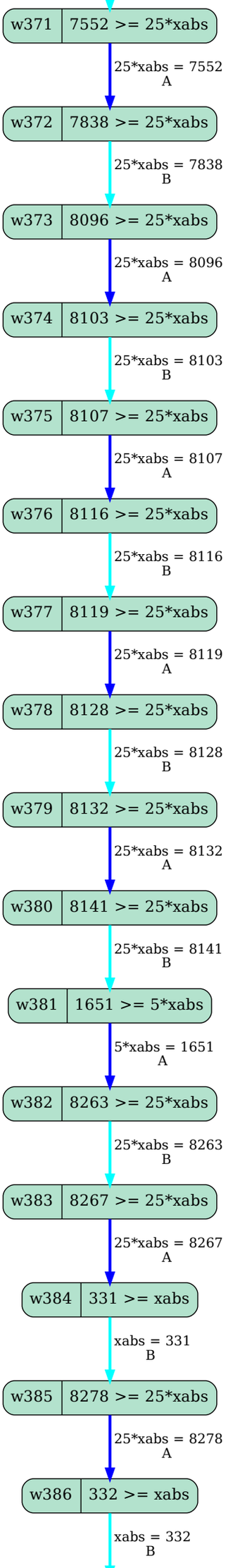
w371
7552 >= 25*xabs
25*xabs = 7552
A
w372
7838 >= 25*xabs
25*xabs = 7838
B
w373
8096 >= 25*xabs
25*xabs = 8096
A
w374
8103 >= 25*xabs
25*xabs = 8103
B
w375
8107 >= 25*xabs
25*xabs = 8107
A
w376
8116 >= 25*xabs
25*xabs = 8116
B
w377
8119 >= 25*xabs
25*xabs = 8119
A
w378
8128 >= 25*xabs
25*xabs = 8128
B
w379
8132 >= 25*xabs
25*xabs = 8132
A
w380
8141 >= 25*xabs
25*xabs = 8141
B
w381
1651 >= 5*xabs
5*xabs = 1651
A
w382
8263 >= 25*xabs
25*xabs = 8263
B
w383
8267 >= 25*xabs
25*xabs = 8267
A
w384
331 >= xabs
xabs = 331
B
w385
8278 >= 25*xabs
25*xabs = 8278
A
w386
332 >= xabs
xabs = 332
B

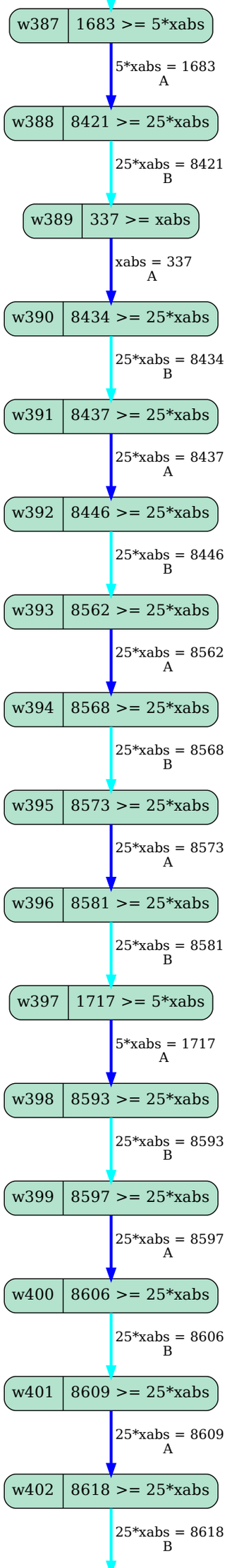
w387
1683 >= 5*xabs
5*xabs = 1683
A
w388
8421 >= 25*xabs
25*xabs = 8421
B
w389
337 >= xabs
xabs = 337
A
w390
8434 >= 25*xabs
25*xabs = 8434
B
w391
8437 >= 25*xabs
25*xabs = 8437
A
w392
8446 >= 25*xabs
25*xabs = 8446
B
w393
8562 >= 25*xabs
25*xabs = 8562
A
w394
8568 >= 25*xabs
25*xabs = 8568
B
w395
8573 >= 25*xabs
25*xabs = 8573
A
w396
8581 >= 25*xabs
25*xabs = 8581
B
w397
1717 >= 5*xabs
5*xabs = 1717
A
w398
8593 >= 25*xabs
25*xabs = 8593
B
w399
8597 >= 25*xabs
25*xabs = 8597
A
w400
8606 >= 25*xabs
25*xabs = 8606
B
w401
8609 >= 25*xabs
25*xabs = 8609
A
w402
8618 >= 25*xabs
25*xabs = 8618
B

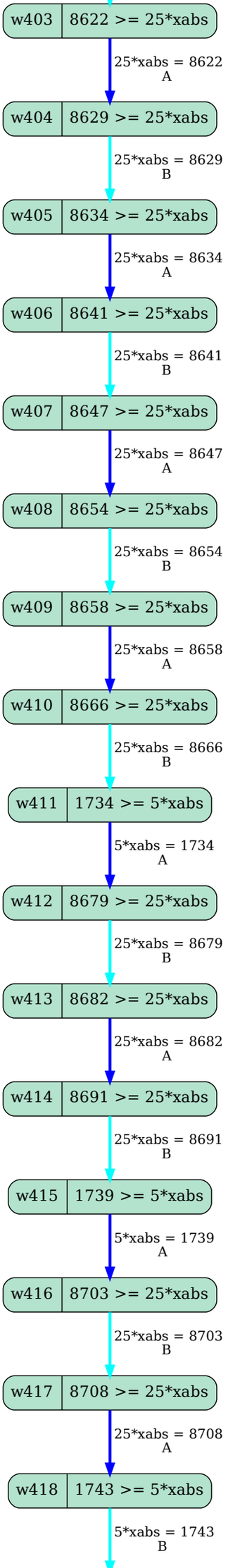
w403
8622 >= 25*xabs
25*xabs = 8622
A
w404
8629 >= 25*xabs
25*xabs = 8629
B
w405
8634 >= 25*xabs
25*xabs = 8634
A
w406
8641 >= 25*xabs
25*xabs = 8641
B
w407
8647 >= 25*xabs
25*xabs = 8647
A
w408
8654 >= 25*xabs
25*xabs = 8654
B
w409
8658 >= 25*xabs
25*xabs = 8658
A
w410
8666 >= 25*xabs
25*xabs = 8666
B
w411
1734 >= 5*xabs
5*xabs = 1734
A
w412
8679 >= 25*xabs
25*xabs = 8679
B
w413
8682 >= 25*xabs
25*xabs = 8682
A
w414
8691 >= 25*xabs
25*xabs = 8691
B
w415
1739 >= 5*xabs
5*xabs = 1739
A
w416
8703 >= 25*xabs
25*xabs = 8703
B
w417
8708 >= 25*xabs
25*xabs = 8708
A
w418
1743 >= 5*xabs
5*xabs = 1743
B

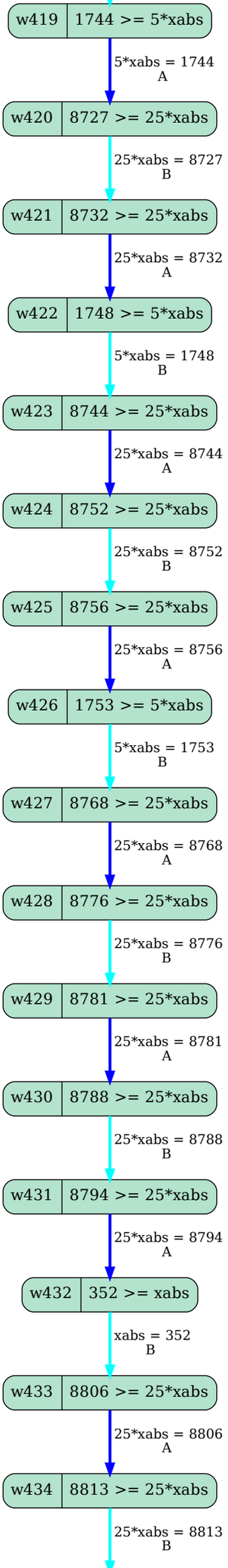
w419
1744 >= 5*xabs
5*xabs = 1744
A
w420
8727 >= 25*xabs
25*xabs = 8727
B
w421
8732 >= 25*xabs
25*xabs = 8732
A
w422
1748 >= 5*xabs
5*xabs = 1748
B
w423
8744 >= 25*xabs
25*xabs = 8744
A
w424
8752 >= 25*xabs
25*xabs = 8752
B
w425
8756 >= 25*xabs
25*xabs = 8756
A
w426
1753 >= 5*xabs
5*xabs = 1753
B
w427
8768 >= 25*xabs
25*xabs = 8768
A
w428
8776 >= 25*xabs
25*xabs = 8776
B
w429
8781 >= 25*xabs
25*xabs = 8781
A
w430
8788 >= 25*xabs
25*xabs = 8788
B
w431
8794 >= 25*xabs
25*xabs = 8794
A
w432
352 >= xabs
xabs = 352
B
w433
8806 >= 25*xabs
25*xabs = 8806
A
w434
8813 >= 25*xabs
25*xabs = 8813
B

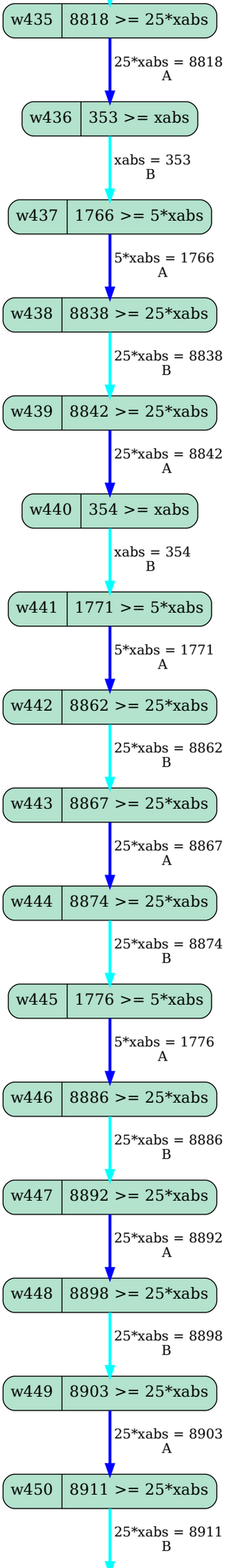
w435
8818 >= 25*xabs
25*xabs = 8818
A
w436
353 >= xabs
xabs = 353
B
w437
1766 >= 5*xabs
5*xabs = 1766
A
w438
8838 >= 25*xabs
25*xabs = 8838
B
w439
8842 >= 25*xabs
25*xabs = 8842
A
w440
354 >= xabs
xabs = 354
B
w441
1771 >= 5*xabs
5*xabs = 1771
A
w442
8862 >= 25*xabs
25*xabs = 8862
B
w443
8867 >= 25*xabs
25*xabs = 8867
A
w444
8874 >= 25*xabs
25*xabs = 8874
B
w445
1776 >= 5*xabs
5*xabs = 1776
A
w446
8886 >= 25*xabs
25*xabs = 8886
B
w447
8892 >= 25*xabs
25*xabs = 8892
A
w448
8898 >= 25*xabs
25*xabs = 8898
B
w449
8903 >= 25*xabs
25*xabs = 8903
A
w450
8911 >= 25*xabs
25*xabs = 8911
B

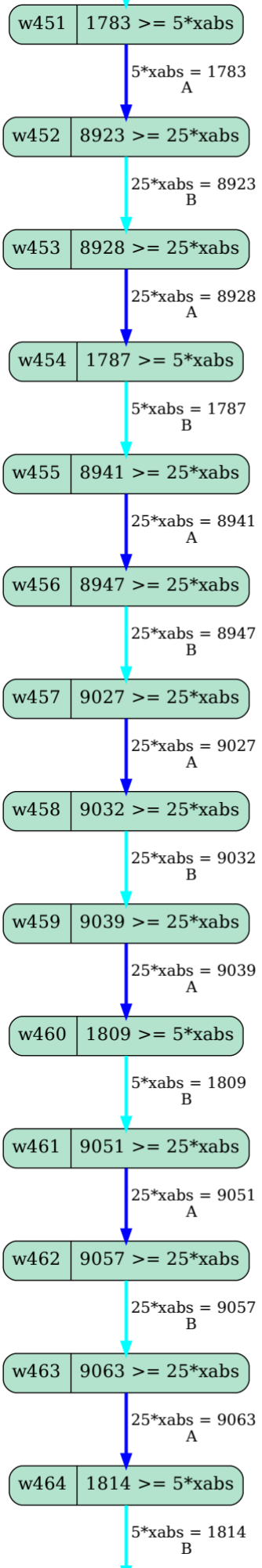
w451
1783 >= 5*xabs
5*xabs = 1783
A
w452
8923 >= 25*xabs
25*xabs = 8923
B
w453
8928 >= 25*xabs
25*xabs = 8928
A
w454
1787 >= 5*xabs
5*xabs = 1787
B
w455
8941 >= 25*xabs
25*xabs = 8941
A
w456
8947 >= 25*xabs
25*xabs = 8947
B
w457
9027 >= 25*xabs
25*xabs = 9027
A
w458
9032 >= 25*xabs
25*xabs = 9032
B
w459
9039 >= 25*xabs
25*xabs = 9039
A
w460
1809 >= 5*xabs
5*xabs = 1809
B
w461
9051 >= 25*xabs
25*xabs = 9051
A
w462
9057 >= 25*xabs
25*xabs = 9057
B
w463
9063 >= 25*xabs
25*xabs = 9063
A
w464
1814 >= 5*xabs
5*xabs = 1814
B

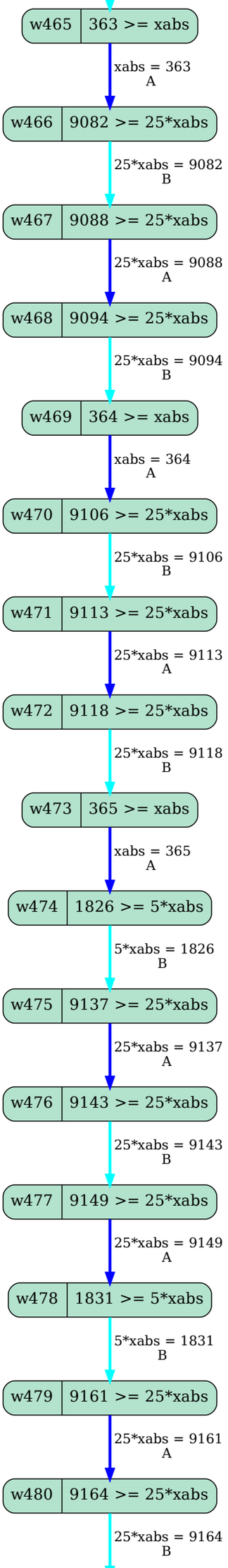
w465
363 >= xabs
xabs = 363
A
w466
9082 >= 25*xabs
25*xabs = 9082
B
w467
9088 >= 25*xabs
25*xabs = 9088
A
w468
9094 >= 25*xabs
25*xabs = 9094
B
w469
364 >= xabs
xabs = 364
A
w470
9106 >= 25*xabs
25*xabs = 9106
B
w471
9113 >= 25*xabs
25*xabs = 9113
A
w472
9118 >= 25*xabs
25*xabs = 9118
B
w473
365 >= xabs
xabs = 365
A
w474
1826 >= 5*xabs
5*xabs = 1826
B
w475
9137 >= 25*xabs
25*xabs = 9137
A
w476
9143 >= 25*xabs
25*xabs = 9143
B
w477
9149 >= 25*xabs
25*xabs = 9149
A
w478
1831 >= 5*xabs
5*xabs = 1831
B
w479
9161 >= 25*xabs
25*xabs = 9161
A
w480
9164 >= 25*xabs
25*xabs = 9164
B

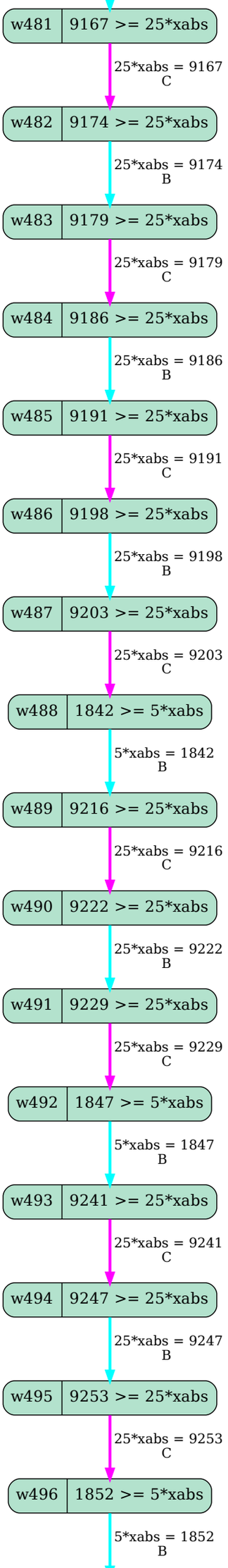
w481
9167 >= 25*xabs
25*xabs = 9167
C
w482
9174 >= 25*xabs
25*xabs = 9174
B
w483
9179 >= 25*xabs
25*xabs = 9179
C
w484
9186 >= 25*xabs
25*xabs = 9186
B
w485
9191 >= 25*xabs
25*xabs = 9191
C
w486
9198 >= 25*xabs
25*xabs = 9198
B
w487
9203 >= 25*xabs
25*xabs = 9203
C
w488
1842 >= 5*xabs
5*xabs = 1842
B
w489
9216 >= 25*xabs
25*xabs = 9216
C
w490
9222 >= 25*xabs
25*xabs = 9222
B
w491
9229 >= 25*xabs
25*xabs = 9229
C
w492
1847 >= 5*xabs
5*xabs = 1847
B
w493
9241 >= 25*xabs
25*xabs = 9241
C
w494
9247 >= 25*xabs
25*xabs = 9247
B
w495
9253 >= 25*xabs
25*xabs = 9253
C
w496
1852 >= 5*xabs
5*xabs = 1852
B

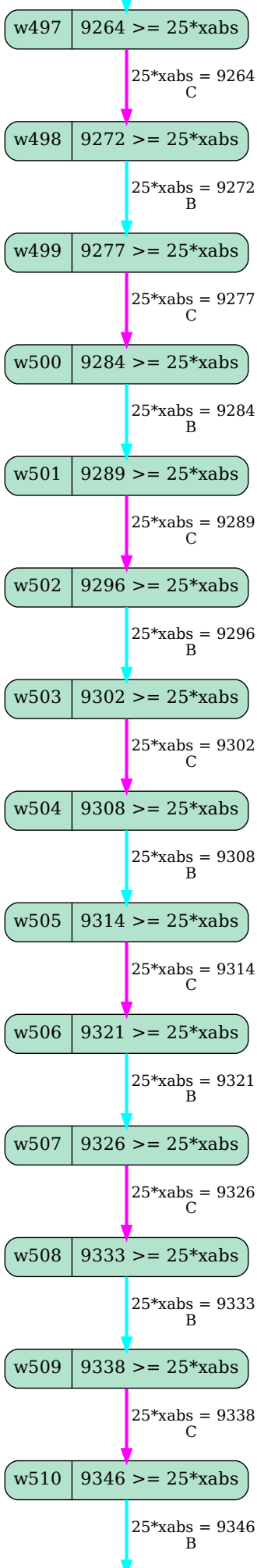
w497
9264 >= 25*xabs
25*xabs = 9264
C
w498
9272 >= 25*xabs
25*xabs = 9272
B
w499
9277 >= 25*xabs
25*xabs = 9277
C
w500
9284 >= 25*xabs
25*xabs = 9284
B
w501
9289 >= 25*xabs
25*xabs = 9289
C
w502
9296 >= 25*xabs
25*xabs = 9296
B
w503
9302 >= 25*xabs
25*xabs = 9302
C
w504
9308 >= 25*xabs
25*xabs = 9308
B
w505
9314 >= 25*xabs
25*xabs = 9314
C
w506
9321 >= 25*xabs
25*xabs = 9321
B
w507
9326 >= 25*xabs
25*xabs = 9326
C
w508
9333 >= 25*xabs
25*xabs = 9333
B
w509
9338 >= 25*xabs
25*xabs = 9338
C
w510
9346 >= 25*xabs
25*xabs = 9346
B

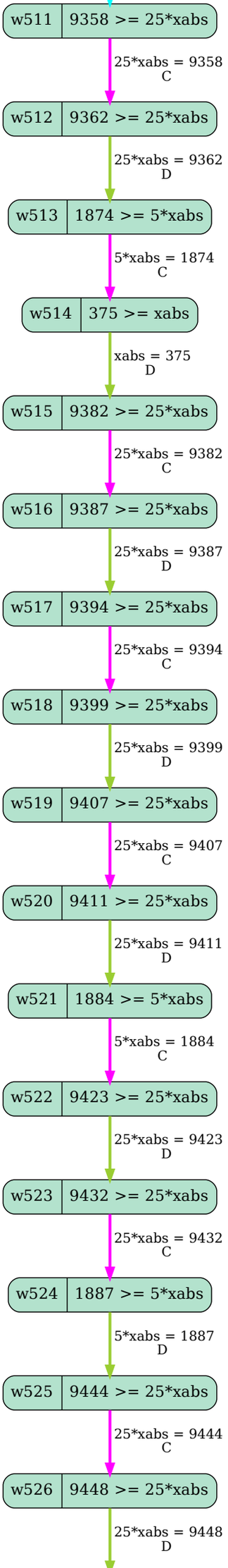
w511
9358 >= 25*xabs
25*xabs = 9358
C
w512
9362 >= 25*xabs
25*xabs = 9362
D
w513
1874 >= 5*xabs
5*xabs = 1874
C
w514
375 >= xabs
xabs = 375
D
w515
9382 >= 25*xabs
25*xabs = 9382
C
w516
9387 >= 25*xabs
25*xabs = 9387
D
w517
9394 >= 25*xabs
25*xabs = 9394
C
w518
9399 >= 25*xabs
25*xabs = 9399
D
w519
9407 >= 25*xabs
25*xabs = 9407
C
w520
9411 >= 25*xabs
25*xabs = 9411
D
w521
1884 >= 5*xabs
5*xabs = 1884
C
w522
9423 >= 25*xabs
25*xabs = 9423
D
w523
9432 >= 25*xabs
25*xabs = 9432
C
w524
1887 >= 5*xabs
5*xabs = 1887
D
w525
9444 >= 25*xabs
25*xabs = 9444
C
w526
9448 >= 25*xabs
25*xabs = 9448
D

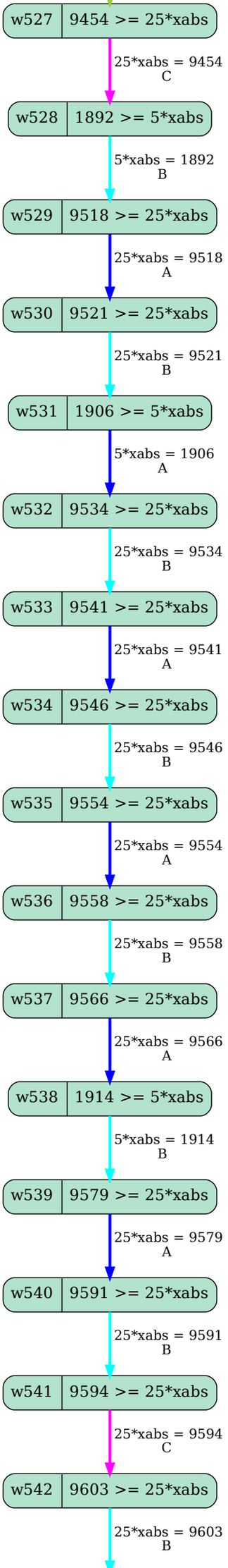
w527
9454 >= 25*xabs
25*xabs = 9454
C
w528
1892 >= 5*xabs
5*xabs = 1892
B
w529
9518 >= 25*xabs
25*xabs = 9518
A
w530
9521 >= 25*xabs
25*xabs = 9521
B
w531
1906 >= 5*xabs
5*xabs = 1906
A
w532
9534 >= 25*xabs
25*xabs = 9534
B
w533
9541 >= 25*xabs
25*xabs = 9541
A
w534
9546 >= 25*xabs
25*xabs = 9546
B
w535
9554 >= 25*xabs
25*xabs = 9554
A
w536
9558 >= 25*xabs
25*xabs = 9558
B
w537
9566 >= 25*xabs
25*xabs = 9566
A
w538
1914 >= 5*xabs
5*xabs = 1914
B
w539
9579 >= 25*xabs
25*xabs = 9579
A
w540
9591 >= 25*xabs
25*xabs = 9591
B
w541
9594 >= 25*xabs
25*xabs = 9594
C
w542
9603 >= 25*xabs
25*xabs = 9603
B

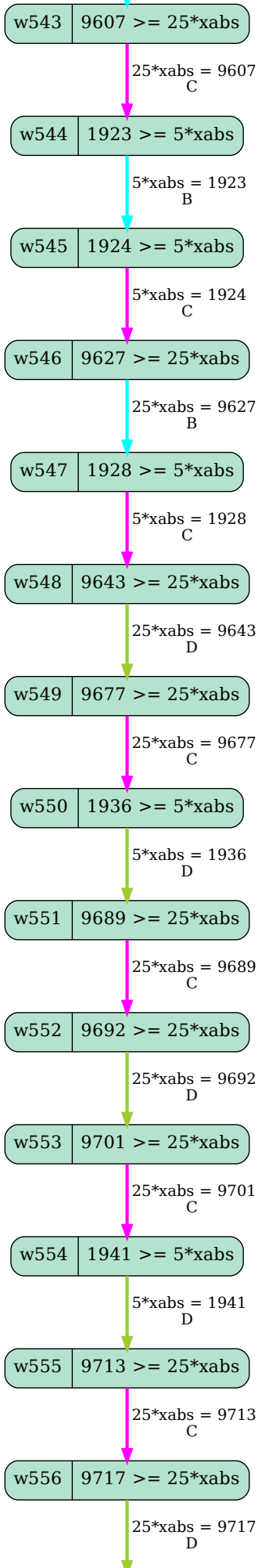
w543
9607 >= 25*xabs
25*xabs = 9607
C
w544
1923 >= 5*xabs
5*xabs = 1923
B
w545
1924 >= 5*xabs
5*xabs = 1924
C
w546
9627 >= 25*xabs
25*xabs = 9627
B
w547
1928 >= 5*xabs
5*xabs = 1928
C
w548
9643 >= 25*xabs
25*xabs = 9643
D
w549
9677 >= 25*xabs
25*xabs = 9677
C
w550
1936 >= 5*xabs
5*xabs = 1936
D
w551
9689 >= 25*xabs
25*xabs = 9689
C
w552
9692 >= 25*xabs
25*xabs = 9692
D
w553
9701 >= 25*xabs
25*xabs = 9701
C
w554
1941 >= 5*xabs
5*xabs = 1941
D
w555
9713 >= 25*xabs
25*xabs = 9713
C
w556
9717 >= 25*xabs
25*xabs = 9717
D

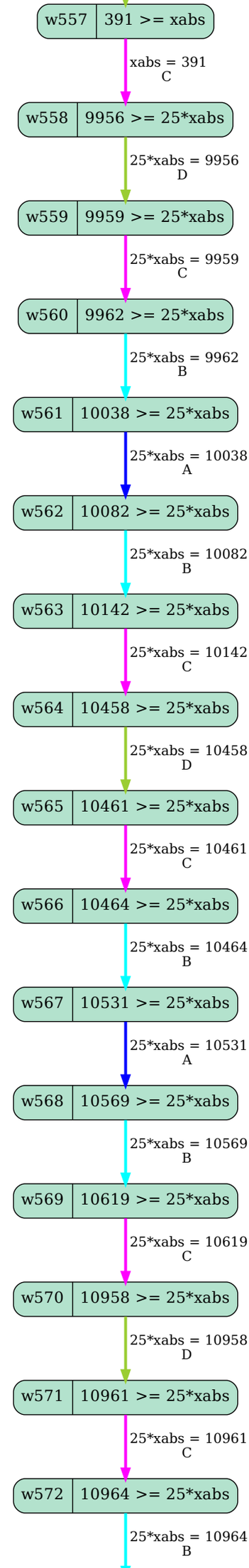
w557
391 >= xabs
xabs = 391
C
w558
9956 >= 25*xabs
25*xabs = 9956
D
w559
9959 >= 25*xabs
25*xabs = 9959
C
w560
9962 >= 25*xabs
25*xabs = 9962
B
w561
10038 >= 25*xabs
25*xabs = 10038
A
w562
10082 >= 25*xabs
25*xabs = 10082
B
w563
10142 >= 25*xabs
25*xabs = 10142
C
w564
10458 >= 25*xabs
25*xabs = 10458
D
w565
10461 >= 25*xabs
25*xabs = 10461
C
w566
10464 >= 25*xabs
25*xabs = 10464
B
w567
10531 >= 25*xabs
25*xabs = 10531
A
w568
10569 >= 25*xabs
25*xabs = 10569
B
w569
10619 >= 25*xabs
25*xabs = 10619
C
w570
10958 >= 25*xabs
25*xabs = 10958
D
w571
10961 >= 25*xabs
25*xabs = 10961
C
w572
10964 >= 25*xabs
25*xabs = 10964
B

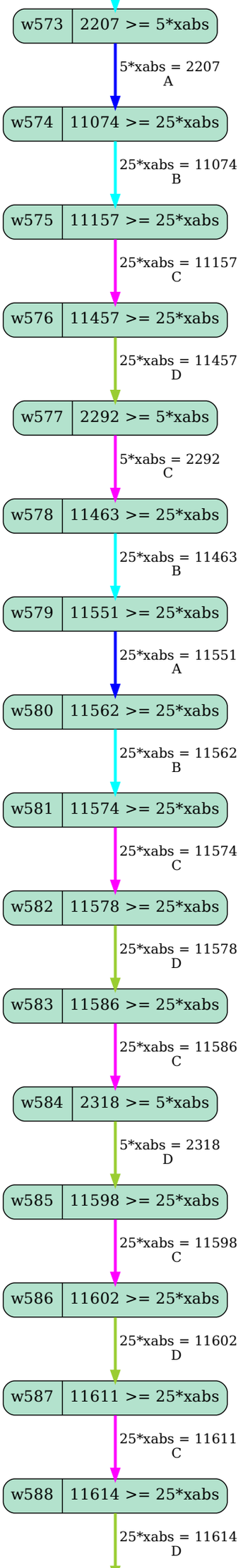
w573
2207 >= 5*xabs
5*xabs = 2207
A
w574
11074 >= 25*xabs
25*xabs = 11074
B
w575
11157 >= 25*xabs
25*xabs = 11157
C
w576
11457 >= 25*xabs
25*xabs = 11457
D
w577
2292 >= 5*xabs
5*xabs = 2292
C
w578
11463 >= 25*xabs
25*xabs = 11463
B
w579
11551 >= 25*xabs
25*xabs = 11551
A
w580
11562 >= 25*xabs
25*xabs = 11562
B
w581
11574 >= 25*xabs
25*xabs = 11574
C
w582
11578 >= 25*xabs
25*xabs = 11578
D
w583
11586 >= 25*xabs
25*xabs = 11586
C
w584
2318 >= 5*xabs
5*xabs = 2318
D
w585
11598 >= 25*xabs
25*xabs = 11598
C
w586
11602 >= 25*xabs
25*xabs = 11602
D
w587
11611 >= 25*xabs
25*xabs = 11611
C
w588
11614 >= 25*xabs
25*xabs = 11614
D

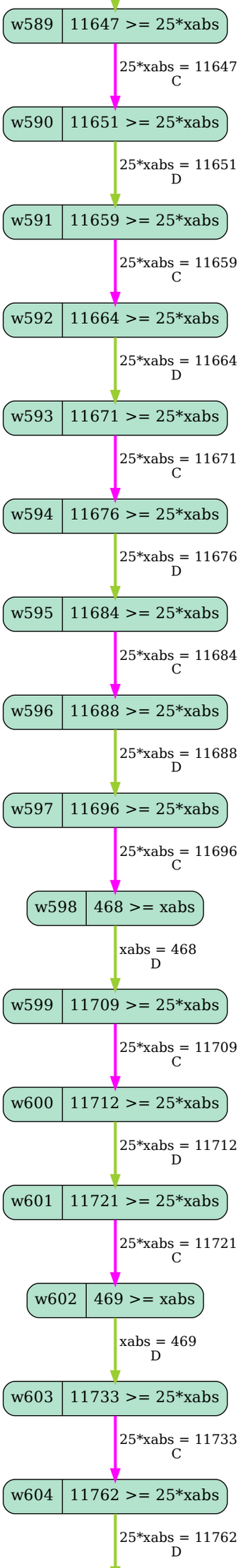
w589
11647 >= 25*xabs
25*xabs = 11647
C
w590
11651 >= 25*xabs
25*xabs = 11651
D
w591
11659 >= 25*xabs
25*xabs = 11659
C
w592
11664 >= 25*xabs
25*xabs = 11664
D
w593
11671 >= 25*xabs
25*xabs = 11671
C
w594
11676 >= 25*xabs
25*xabs = 11676
D
w595
11684 >= 25*xabs
25*xabs = 11684
C
w596
11688 >= 25*xabs
25*xabs = 11688
D
w597
11696 >= 25*xabs
25*xabs = 11696
C
w598
468 >= xabs
xabs = 468
D
w599
11709 >= 25*xabs
25*xabs = 11709
C
w600
11712 >= 25*xabs
25*xabs = 11712
D
w601
11721 >= 25*xabs
25*xabs = 11721
C
w602
469 >= xabs
xabs = 469
D
w603
11733 >= 25*xabs
25*xabs = 11733
C
w604
11762 >= 25*xabs
25*xabs = 11762
D

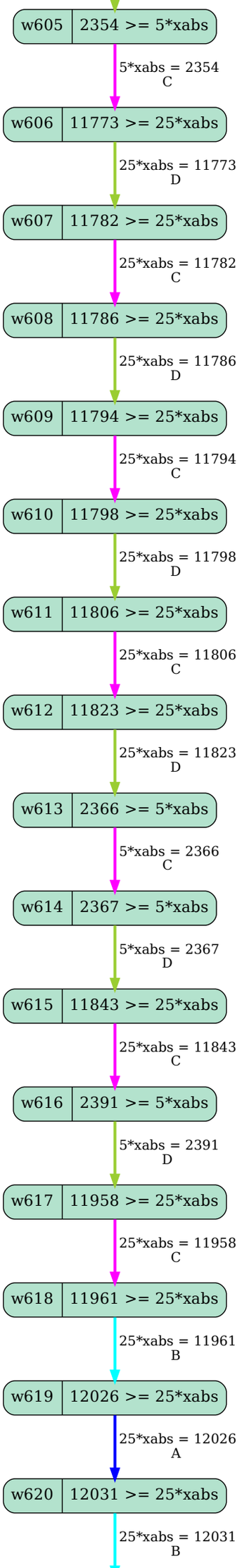
w605
2354 >= 5*xabs
5*xabs = 2354
C
w606
11773 >= 25*xabs
25*xabs = 11773
D
w607
11782 >= 25*xabs
25*xabs = 11782
C
w608
11786 >= 25*xabs
25*xabs = 11786
D
w609
11794 >= 25*xabs
25*xabs = 11794
C
w610
11798 >= 25*xabs
25*xabs = 11798
D
w611
11806 >= 25*xabs
25*xabs = 11806
C
w612
11823 >= 25*xabs
25*xabs = 11823
D
w613
2366 >= 5*xabs
5*xabs = 2366
C
w614
2367 >= 5*xabs
5*xabs = 2367
D
w615
11843 >= 25*xabs
25*xabs = 11843
C
w616
2391 >= 5*xabs
5*xabs = 2391
D
w617
11958 >= 25*xabs
25*xabs = 11958
C
w618
11961 >= 25*xabs
25*xabs = 11961
B
w619
12026 >= 25*xabs
25*xabs = 12026
A
w620
12031 >= 25*xabs
25*xabs = 12031
B

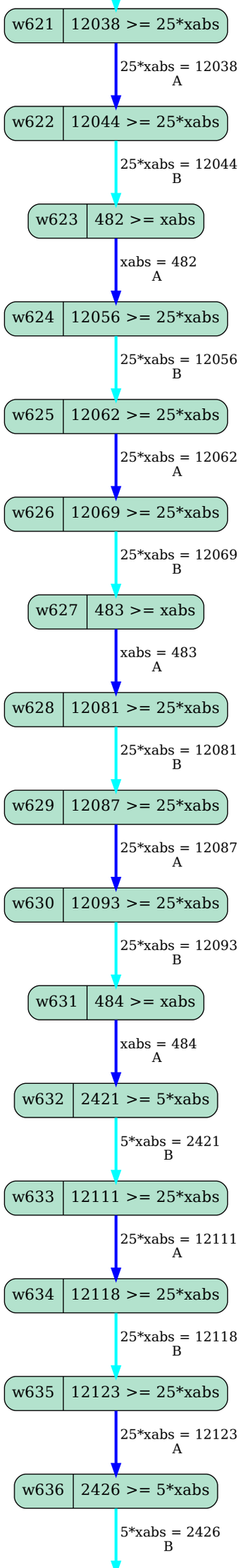
w621
12038 >= 25*xabs
25*xabs = 12038
A
w622
12044 >= 25*xabs
25*xabs = 12044
B
w623
482 >= xabs
xabs = 482
A
w624
12056 >= 25*xabs
25*xabs = 12056
B
w625
12062 >= 25*xabs
25*xabs = 12062
A
w626
12069 >= 25*xabs
25*xabs = 12069
B
w627
483 >= xabs
xabs = 483
A
w628
12081 >= 25*xabs
25*xabs = 12081
B
w629
12087 >= 25*xabs
25*xabs = 12087
A
w630
12093 >= 25*xabs
25*xabs = 12093
B
w631
484 >= xabs
xabs = 484
A
w632
2421 >= 5*xabs
5*xabs = 2421
B
w633
12111 >= 25*xabs
25*xabs = 12111
A
w634
12118 >= 25*xabs
25*xabs = 12118
B
w635
12123 >= 25*xabs
25*xabs = 12123
A
w636
2426 >= 5*xabs
5*xabs = 2426
B

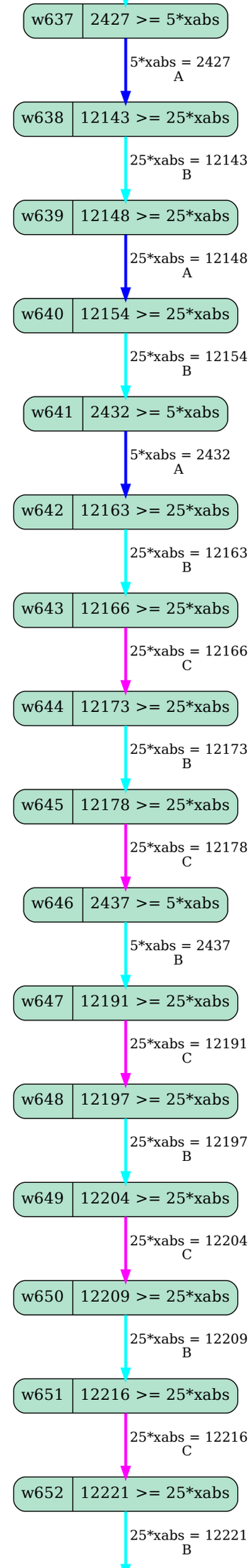
w637
2427 >= 5*xabs
5*xabs = 2427
A
w638
12143 >= 25*xabs
25*xabs = 12143
B
w639
12148 >= 25*xabs
25*xabs = 12148
A
w640
12154 >= 25*xabs
25*xabs = 12154
B
w641
2432 >= 5*xabs
5*xabs = 2432
A
w642
12163 >= 25*xabs
25*xabs = 12163
B
w643
12166 >= 25*xabs
25*xabs = 12166
C
w644
12173 >= 25*xabs
25*xabs = 12173
B
w645
12178 >= 25*xabs
25*xabs = 12178
C
w646
2437 >= 5*xabs
5*xabs = 2437
B
w647
12191 >= 25*xabs
25*xabs = 12191
C
w648
12197 >= 25*xabs
25*xabs = 12197
B
w649
12204 >= 25*xabs
25*xabs = 12204
C
w650
12209 >= 25*xabs
25*xabs = 12209
B
w651
12216 >= 25*xabs
25*xabs = 12216
C
w652
12221 >= 25*xabs
25*xabs = 12221
B

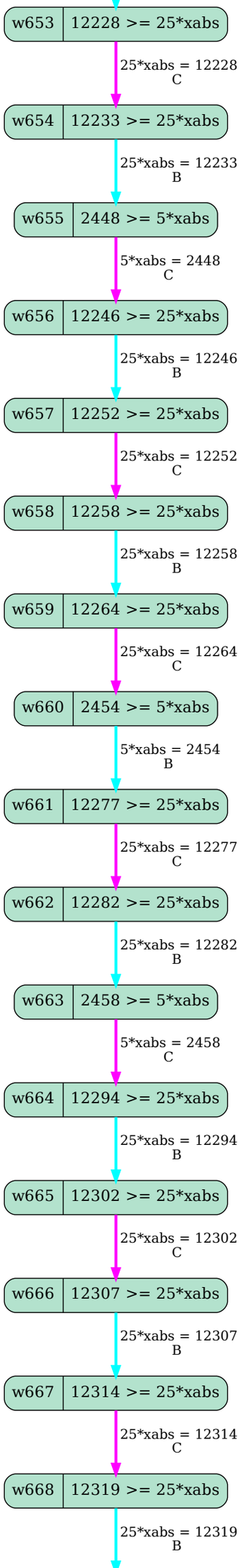
w653
12228 >= 25*xabs
25*xabs = 12228
C
w654
12233 >= 25*xabs
25*xabs = 12233
B
w655
2448 >= 5*xabs
5*xabs = 2448
C
w656
12246 >= 25*xabs
25*xabs = 12246
B
w657
12252 >= 25*xabs
25*xabs = 12252
C
w658
12258 >= 25*xabs
25*xabs = 12258
B
w659
12264 >= 25*xabs
25*xabs = 12264
C
w660
2454 >= 5*xabs
5*xabs = 2454
B
w661
12277 >= 25*xabs
25*xabs = 12277
C
w662
12282 >= 25*xabs
25*xabs = 12282
B
w663
2458 >= 5*xabs
5*xabs = 2458
C
w664
12294 >= 25*xabs
25*xabs = 12294
B
w665
12302 >= 25*xabs
25*xabs = 12302
C
w666
12307 >= 25*xabs
25*xabs = 12307
B
w667
12314 >= 25*xabs
25*xabs = 12314
C
w668
12319 >= 25*xabs
25*xabs = 12319
B

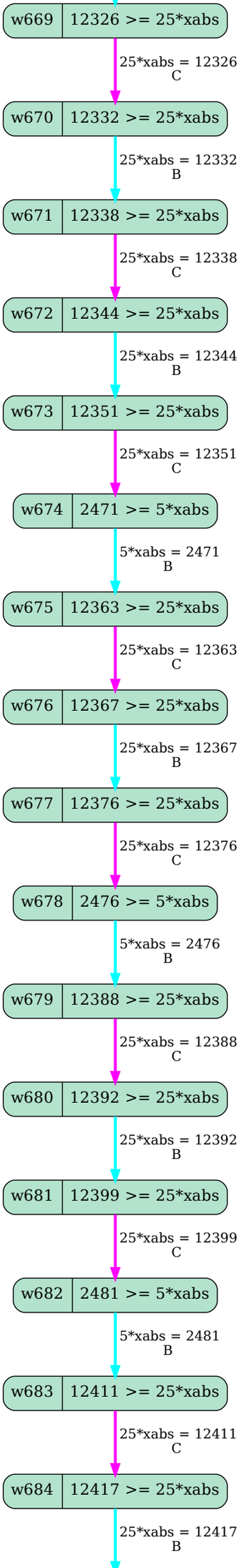
w669
12326 >= 25*xabs
25*xabs = 12326
C
w670
12332 >= 25*xabs
25*xabs = 12332
B
w671
12338 >= 25*xabs
25*xabs = 12338
C
w672
12344 >= 25*xabs
25*xabs = 12344
B
w673
12351 >= 25*xabs
25*xabs = 12351
C
w674
2471 >= 5*xabs
5*xabs = 2471
B
w675
12363 >= 25*xabs
25*xabs = 12363
C
w676
12367 >= 25*xabs
25*xabs = 12367
B
w677
12376 >= 25*xabs
25*xabs = 12376
C
w678
2476 >= 5*xabs
5*xabs = 2476
B
w679
12388 >= 25*xabs
25*xabs = 12388
C
w680
12392 >= 25*xabs
25*xabs = 12392
B
w681
12399 >= 25*xabs
25*xabs = 12399
C
w682
2481 >= 5*xabs
5*xabs = 2481
B
w683
12411 >= 25*xabs
25*xabs = 12411
C
w684
12417 >= 25*xabs
25*xabs = 12417
B

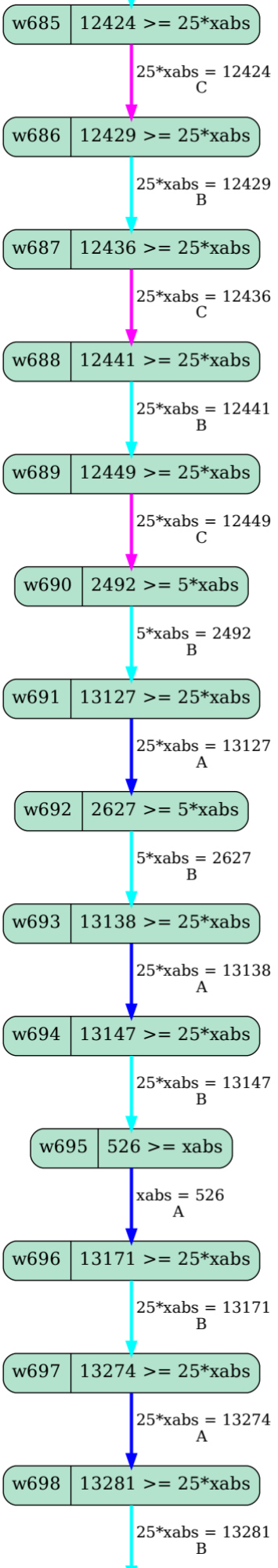
w685
12424 >= 25*xabs
25*xabs = 12424
C
w686
12429 >= 25*xabs
25*xabs = 12429
B
w687
12436 >= 25*xabs
25*xabs = 12436
C
w688
12441 >= 25*xabs
25*xabs = 12441
B
w689
12449 >= 25*xabs
25*xabs = 12449
C
w690
2492 >= 5*xabs
5*xabs = 2492
B
w691
13127 >= 25*xabs
25*xabs = 13127
A
w692
2627 >= 5*xabs
5*xabs = 2627
B
w693
13138 >= 25*xabs
25*xabs = 13138
A
w694
13147 >= 25*xabs
25*xabs = 13147
B
w695
526 >= xabs
xabs = 526
A
w696
13171 >= 25*xabs
25*xabs = 13171
B
w697
13274 >= 25*xabs
25*xabs = 13274
A
w698
13281 >= 25*xabs
25*xabs = 13281
B

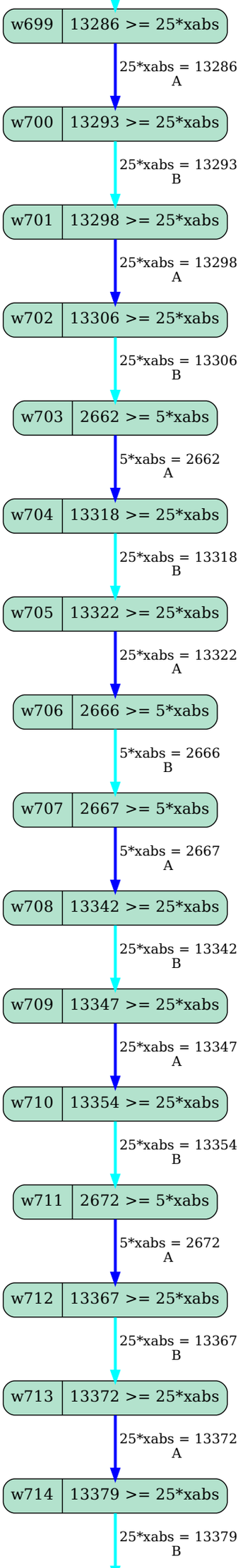
w699
13286 >= 25*xabs
25*xabs = 13286
A
w700
13293 >= 25*xabs
25*xabs = 13293
B
w701
13298 >= 25*xabs
25*xabs = 13298
A
w702
13306 >= 25*xabs
25*xabs = 13306
B
w703
2662 >= 5*xabs
5*xabs = 2662
A
w704
13318 >= 25*xabs
25*xabs = 13318
B
w705
13322 >= 25*xabs
25*xabs = 13322
A
w706
2666 >= 5*xabs
5*xabs = 2666
B
w707
2667 >= 5*xabs
5*xabs = 2667
A
w708
13342 >= 25*xabs
25*xabs = 13342
B
w709
13347 >= 25*xabs
25*xabs = 13347
A
w710
13354 >= 25*xabs
25*xabs = 13354
B
w711
2672 >= 5*xabs
5*xabs = 2672
A
w712
13367 >= 25*xabs
25*xabs = 13367
B
w713
13372 >= 25*xabs
25*xabs = 13372
A
w714
13379 >= 25*xabs
25*xabs = 13379
B

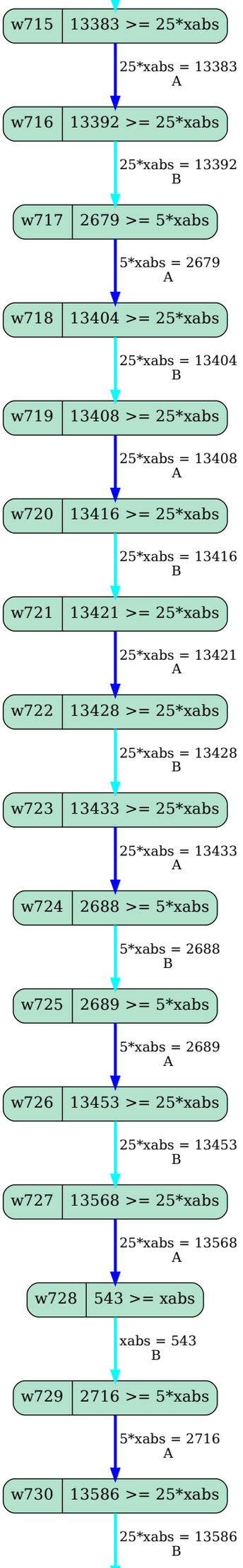
w715
13383 >= 25*xabs
25*xabs = 13383
A
w716
13392 >= 25*xabs
25*xabs = 13392
B
w717
2679 >= 5*xabs
5*xabs = 2679
A
w718
13404 >= 25*xabs
25*xabs = 13404
B
w719
13408 >= 25*xabs
25*xabs = 13408
A
w720
13416 >= 25*xabs
25*xabs = 13416
B
w721
13421 >= 25*xabs
25*xabs = 13421
A
w722
13428 >= 25*xabs
25*xabs = 13428
B
w723
13433 >= 25*xabs
25*xabs = 13433
A
w724
2688 >= 5*xabs
5*xabs = 2688
B
w725
2689 >= 5*xabs
5*xabs = 2689
A
w726
13453 >= 25*xabs
25*xabs = 13453
B
w727
13568 >= 25*xabs
25*xabs = 13568
A
w728
543 >= xabs
xabs = 543
B
w729
2716 >= 5*xabs
5*xabs = 2716
A
w730
13586 >= 25*xabs
25*xabs = 13586
B

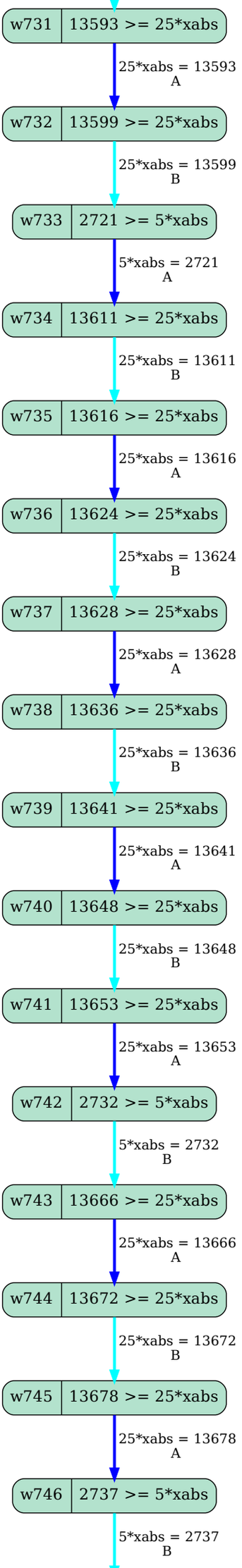
w731
13593 >= 25*xabs
25*xabs = 13593
A
w732
13599 >= 25*xabs
25*xabs = 13599
B
w733
2721 >= 5*xabs
5*xabs = 2721
A
w734
13611 >= 25*xabs
25*xabs = 13611
B
w735
13616 >= 25*xabs
25*xabs = 13616
A
w736
13624 >= 25*xabs
25*xabs = 13624
B
w737
13628 >= 25*xabs
25*xabs = 13628
A
w738
13636 >= 25*xabs
25*xabs = 13636
B
w739
13641 >= 25*xabs
25*xabs = 13641
A
w740
13648 >= 25*xabs
25*xabs = 13648
B
w741
13653 >= 25*xabs
25*xabs = 13653
A
w742
2732 >= 5*xabs
5*xabs = 2732
B
w743
13666 >= 25*xabs
25*xabs = 13666
A
w744
13672 >= 25*xabs
25*xabs = 13672
B
w745
13678 >= 25*xabs
25*xabs = 13678
A
w746
2737 >= 5*xabs
5*xabs = 2737
B

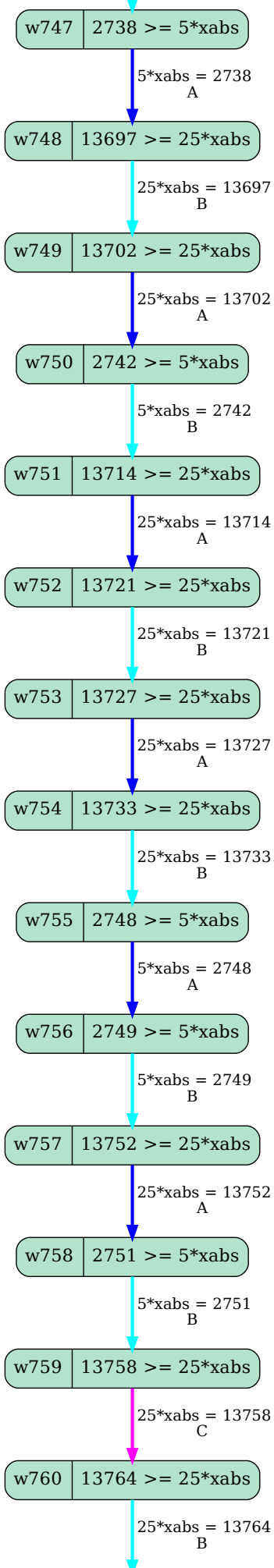
w747
2738 >= 5*xabs
5*xabs = 2738
A
w748
13697 >= 25*xabs
25*xabs = 13697
B
w749
13702 >= 25*xabs
25*xabs = 13702
A
w750
2742 >= 5*xabs
5*xabs = 2742
B
w751
13714 >= 25*xabs
25*xabs = 13714
A
w752
13721 >= 25*xabs
25*xabs = 13721
B
w753
13727 >= 25*xabs
25*xabs = 13727
A
w754
13733 >= 25*xabs
25*xabs = 13733
B
w755
2748 >= 5*xabs
5*xabs = 2748
A
w756
2749 >= 5*xabs
5*xabs = 2749
B
w757
13752 >= 25*xabs
25*xabs = 13752
A
w758
2751 >= 5*xabs
5*xabs = 2751
B
w759
13758 >= 25*xabs
25*xabs = 13758
C
w760
13764 >= 25*xabs
25*xabs = 13764
B

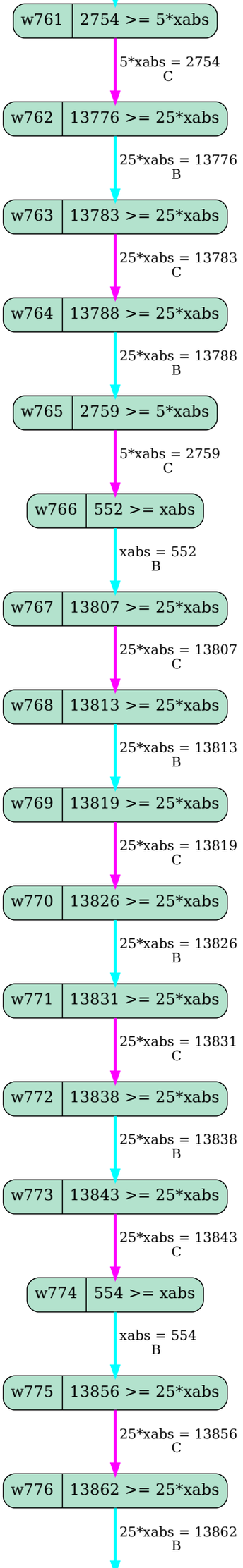
w761
2754 >= 5*xabs
5*xabs = 2754
C
w762
13776 >= 25*xabs
25*xabs = 13776
B
w763
13783 >= 25*xabs
25*xabs = 13783
C
w764
13788 >= 25*xabs
25*xabs = 13788
B
w765
2759 >= 5*xabs
5*xabs = 2759
C
w766
552 >= xabs
xabs = 552
B
w767
13807 >= 25*xabs
25*xabs = 13807
C
w768
13813 >= 25*xabs
25*xabs = 13813
B
w769
13819 >= 25*xabs
25*xabs = 13819
C
w770
13826 >= 25*xabs
25*xabs = 13826
B
w771
13831 >= 25*xabs
25*xabs = 13831
C
w772
13838 >= 25*xabs
25*xabs = 13838
B
w773
13843 >= 25*xabs
25*xabs = 13843
C
w774
554 >= xabs
xabs = 554
B
w775
13856 >= 25*xabs
25*xabs = 13856
C
w776
13862 >= 25*xabs
25*xabs = 13862
B

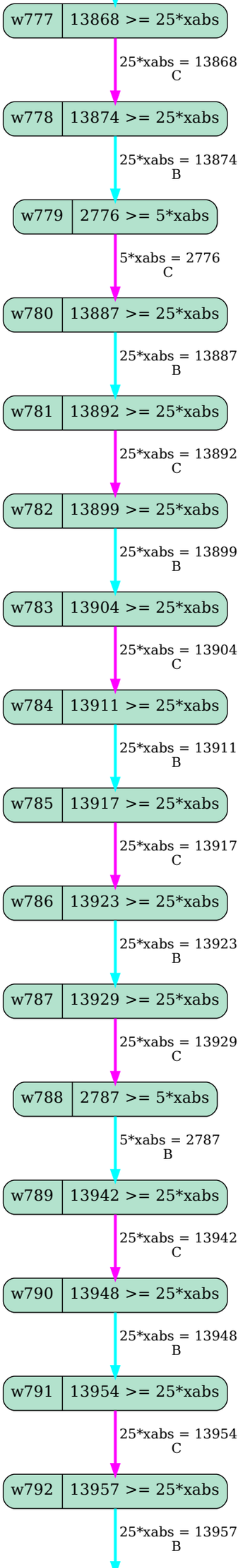
w777
13868 >= 25*xabs
25*xabs = 13868
C
w778
13874 >= 25*xabs
25*xabs = 13874
B
w779
2776 >= 5*xabs
5*xabs = 2776
C
w780
13887 >= 25*xabs
25*xabs = 13887
B
w781
13892 >= 25*xabs
25*xabs = 13892
C
w782
13899 >= 25*xabs
25*xabs = 13899
B
w783
13904 >= 25*xabs
25*xabs = 13904
C
w784
13911 >= 25*xabs
25*xabs = 13911
B
w785
13917 >= 25*xabs
25*xabs = 13917
C
w786
13923 >= 25*xabs
25*xabs = 13923
B
w787
13929 >= 25*xabs
25*xabs = 13929
C
w788
2787 >= 5*xabs
5*xabs = 2787
B
w789
13942 >= 25*xabs
25*xabs = 13942
C
w790
13948 >= 25*xabs
25*xabs = 13948
B
w791
13954 >= 25*xabs
25*xabs = 13954
C
w792
13957 >= 25*xabs
25*xabs = 13957
B

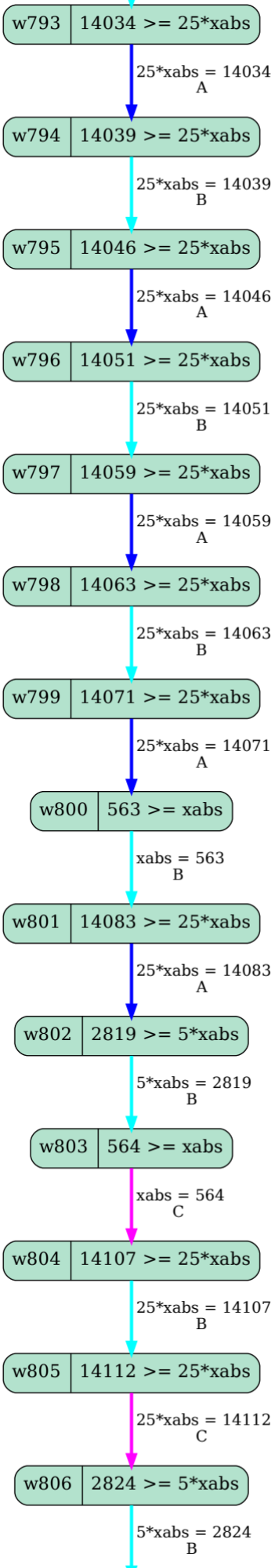
w793
14034 >= 25*xabs
25*xabs = 14034
A
w794
14039 >= 25*xabs
25*xabs = 14039
B
w795
14046 >= 25*xabs
25*xabs = 14046
A
w796
14051 >= 25*xabs
25*xabs = 14051
B
w797
14059 >= 25*xabs
25*xabs = 14059
A
w798
14063 >= 25*xabs
25*xabs = 14063
B
w799
14071 >= 25*xabs
25*xabs = 14071
A
w800
563 >= xabs
xabs = 563
B
w801
14083 >= 25*xabs
25*xabs = 14083
A
w802
2819 >= 5*xabs
5*xabs = 2819
B
w803
564 >= xabs
xabs = 564
C
w804
14107 >= 25*xabs
25*xabs = 14107
B
w805
14112 >= 25*xabs
25*xabs = 14112
C
w806
2824 >= 5*xabs
5*xabs = 2824
B

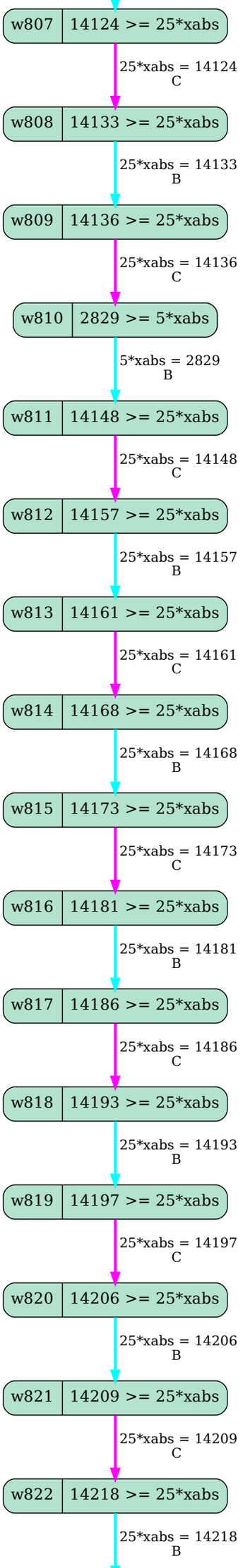
w807
14124 >= 25*xabs
25*xabs = 14124
C
w808
14133 >= 25*xabs
25*xabs = 14133
B
w809
14136 >= 25*xabs
25*xabs = 14136
C
w810
2829 >= 5*xabs
5*xabs = 2829
B
w811
14148 >= 25*xabs
25*xabs = 14148
C
w812
14157 >= 25*xabs
25*xabs = 14157
B
w813
14161 >= 25*xabs
25*xabs = 14161
C
w814
14168 >= 25*xabs
25*xabs = 14168
B
w815
14173 >= 25*xabs
25*xabs = 14173
C
w816
14181 >= 25*xabs
25*xabs = 14181
B
w817
14186 >= 25*xabs
25*xabs = 14186
C
w818
14193 >= 25*xabs
25*xabs = 14193
B
w819
14197 >= 25*xabs
25*xabs = 14197
C
w820
14206 >= 25*xabs
25*xabs = 14206
B
w821
14209 >= 25*xabs
25*xabs = 14209
C
w822
14218 >= 25*xabs
25*xabs = 14218
B

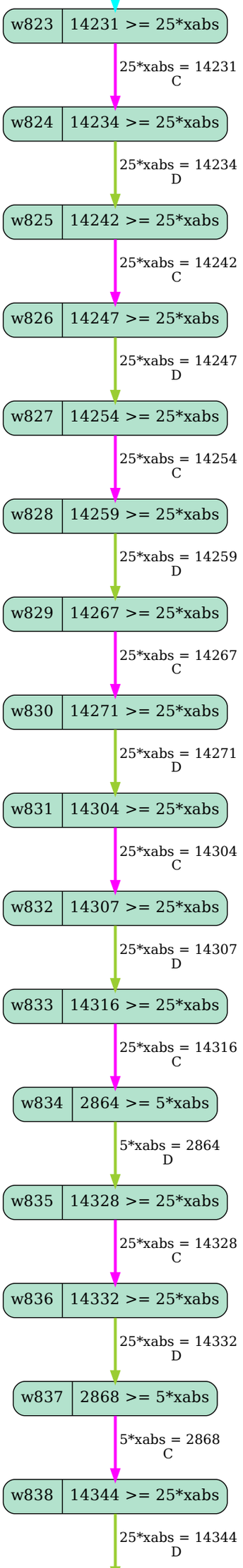
w823
14231 >= 25*xabs
25*xabs = 14231
C
w824
14234 >= 25*xabs
25*xabs = 14234
D
w825
14242 >= 25*xabs
25*xabs = 14242
C
w826
14247 >= 25*xabs
25*xabs = 14247
D
w827
14254 >= 25*xabs
25*xabs = 14254
C
w828
14259 >= 25*xabs
25*xabs = 14259
D
w829
14267 >= 25*xabs
25*xabs = 14267
C
w830
14271 >= 25*xabs
25*xabs = 14271
D
w831
14304 >= 25*xabs
25*xabs = 14304
C
w832
14307 >= 25*xabs
25*xabs = 14307
D
w833
14316 >= 25*xabs
25*xabs = 14316
C
w834
2864 >= 5*xabs
5*xabs = 2864
D
w835
14328 >= 25*xabs
25*xabs = 14328
C
w836
14332 >= 25*xabs
25*xabs = 14332
D
w837
2868 >= 5*xabs
5*xabs = 2868
C
w838
14344 >= 25*xabs
25*xabs = 14344
D

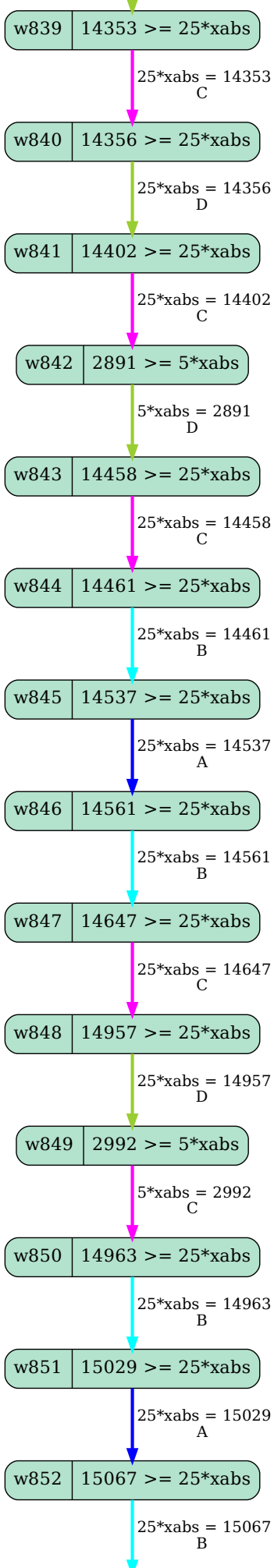
w839
14353 >= 25*xabs
25*xabs = 14353
C
w840
14356 >= 25*xabs
25*xabs = 14356
D
w841
14402 >= 25*xabs
25*xabs = 14402
C
w842
2891 >= 5*xabs
5*xabs = 2891
D
w843
14458 >= 25*xabs
25*xabs = 14458
C
w844
14461 >= 25*xabs
25*xabs = 14461
B
w845
14537 >= 25*xabs
25*xabs = 14537
A
w846
14561 >= 25*xabs
25*xabs = 14561
B
w847
14647 >= 25*xabs
25*xabs = 14647
C
w848
14957 >= 25*xabs
25*xabs = 14957
D
w849
2992 >= 5*xabs
5*xabs = 2992
C
w850
14963 >= 25*xabs
25*xabs = 14963
B
w851
15029 >= 25*xabs
25*xabs = 15029
A
w852
15067 >= 25*xabs
25*xabs = 15067
B

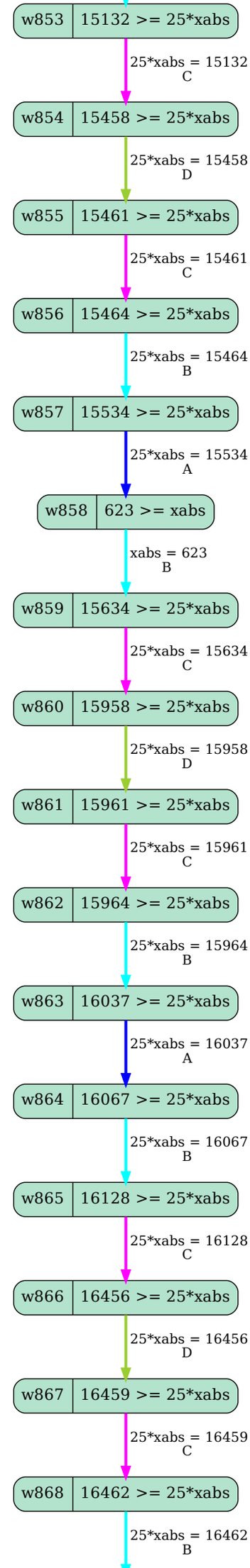
w853
15132 >= 25*xabs
25*xabs = 15132
C
w854
15458 >= 25*xabs
25*xabs = 15458
D
w855
15461 >= 25*xabs
25*xabs = 15461
C
w856
15464 >= 25*xabs
25*xabs = 15464
B
w857
15534 >= 25*xabs
25*xabs = 15534
A
w858
623 >= xabs
xabs = 623
B
w859
15634 >= 25*xabs
25*xabs = 15634
C
w860
15958 >= 25*xabs
25*xabs = 15958
D
w861
15961 >= 25*xabs
25*xabs = 15961
C
w862
15964 >= 25*xabs
25*xabs = 15964
B
w863
16037 >= 25*xabs
25*xabs = 16037
A
w864
16067 >= 25*xabs
25*xabs = 16067
B
w865
16128 >= 25*xabs
25*xabs = 16128
C
w866
16456 >= 25*xabs
25*xabs = 16456
D
w867
16459 >= 25*xabs
25*xabs = 16459
C
w868
16462 >= 25*xabs
25*xabs = 16462
B

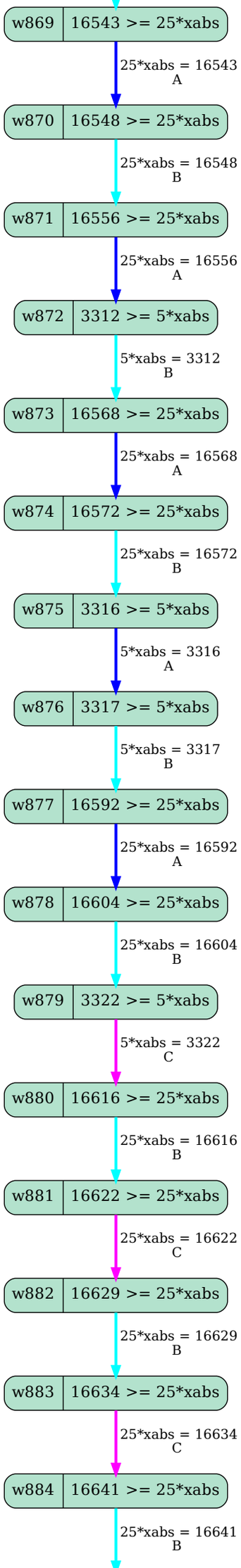
w869
16543 >= 25*xabs
25*xabs = 16543
A
w870
16548 >= 25*xabs
25*xabs = 16548
B
w871
16556 >= 25*xabs
25*xabs = 16556
A
w872
3312 >= 5*xabs
5*xabs = 3312
B
w873
16568 >= 25*xabs
25*xabs = 16568
A
w874
16572 >= 25*xabs
25*xabs = 16572
B
w875
3316 >= 5*xabs
5*xabs = 3316
A
w876
3317 >= 5*xabs
5*xabs = 3317
B
w877
16592 >= 25*xabs
25*xabs = 16592
A
w878
16604 >= 25*xabs
25*xabs = 16604
B
w879
3322 >= 5*xabs
5*xabs = 3322
C
w880
16616 >= 25*xabs
25*xabs = 16616
B
w881
16622 >= 25*xabs
25*xabs = 16622
C
w882
16629 >= 25*xabs
25*xabs = 16629
B
w883
16634 >= 25*xabs
25*xabs = 16634
C
w884
16641 >= 25*xabs
25*xabs = 16641
B

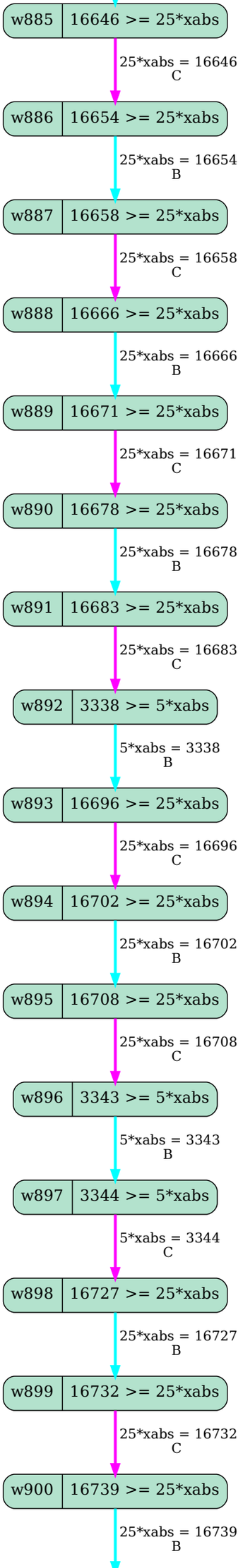
w885
16646 >= 25*xabs
25*xabs = 16646
C
w886
16654 >= 25*xabs
25*xabs = 16654
B
w887
16658 >= 25*xabs
25*xabs = 16658
C
w888
16666 >= 25*xabs
25*xabs = 16666
B
w889
16671 >= 25*xabs
25*xabs = 16671
C
w890
16678 >= 25*xabs
25*xabs = 16678
B
w891
16683 >= 25*xabs
25*xabs = 16683
C
w892
3338 >= 5*xabs
5*xabs = 3338
B
w893
16696 >= 25*xabs
25*xabs = 16696
C
w894
16702 >= 25*xabs
25*xabs = 16702
B
w895
16708 >= 25*xabs
25*xabs = 16708
C
w896
3343 >= 5*xabs
5*xabs = 3343
B
w897
3344 >= 5*xabs
5*xabs = 3344
C
w898
16727 >= 25*xabs
25*xabs = 16727
B
w899
16732 >= 25*xabs
25*xabs = 16732
C
w900
16739 >= 25*xabs
25*xabs = 16739
B

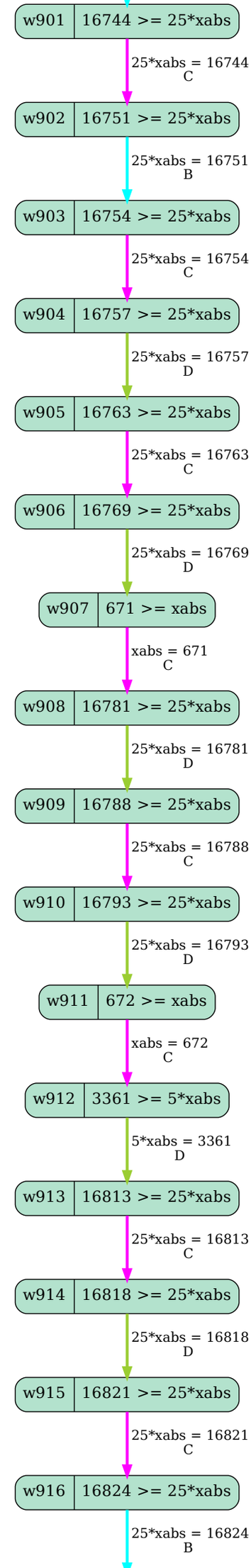
w901
16744 >= 25*xabs
25*xabs = 16744
C
w902
16751 >= 25*xabs
25*xabs = 16751
B
w903
16754 >= 25*xabs
25*xabs = 16754
C
w904
16757 >= 25*xabs
25*xabs = 16757
D
w905
16763 >= 25*xabs
25*xabs = 16763
C
w906
16769 >= 25*xabs
25*xabs = 16769
D
w907
671 >= xabs
xabs = 671
C
w908
16781 >= 25*xabs
25*xabs = 16781
D
w909
16788 >= 25*xabs
25*xabs = 16788
C
w910
16793 >= 25*xabs
25*xabs = 16793
D
w911
672 >= xabs
xabs = 672
C
w912
3361 >= 5*xabs
5*xabs = 3361
D
w913
16813 >= 25*xabs
25*xabs = 16813
C
w914
16818 >= 25*xabs
25*xabs = 16818
D
w915
16821 >= 25*xabs
25*xabs = 16821
C
w916
16824 >= 25*xabs
25*xabs = 16824
B

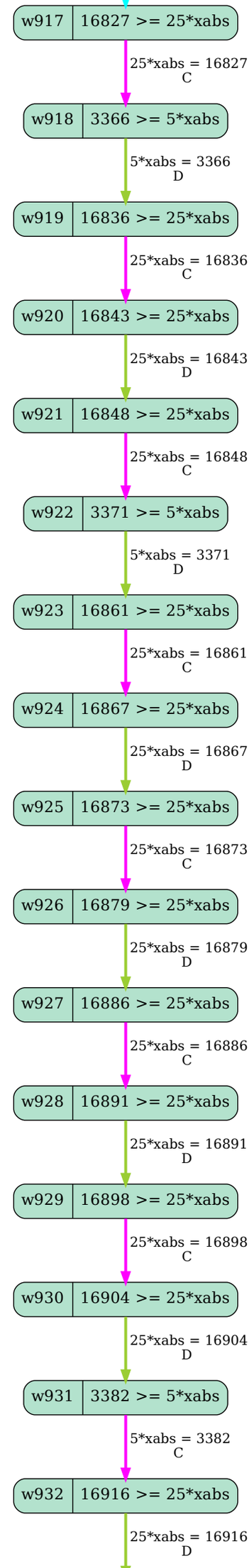
w917
16827 >= 25*xabs
25*xabs = 16827
C
w918
3366 >= 5*xabs
5*xabs = 3366
D
w919
16836 >= 25*xabs
25*xabs = 16836
C
w920
16843 >= 25*xabs
25*xabs = 16843
D
w921
16848 >= 25*xabs
25*xabs = 16848
C
w922
3371 >= 5*xabs
5*xabs = 3371
D
w923
16861 >= 25*xabs
25*xabs = 16861
C
w924
16867 >= 25*xabs
25*xabs = 16867
D
w925
16873 >= 25*xabs
25*xabs = 16873
C
w926
16879 >= 25*xabs
25*xabs = 16879
D
w927
16886 >= 25*xabs
25*xabs = 16886
C
w928
16891 >= 25*xabs
25*xabs = 16891
D
w929
16898 >= 25*xabs
25*xabs = 16898
C
w930
16904 >= 25*xabs
25*xabs = 16904
D
w931
3382 >= 5*xabs
5*xabs = 3382
C
w932
16916 >= 25*xabs
25*xabs = 16916
D

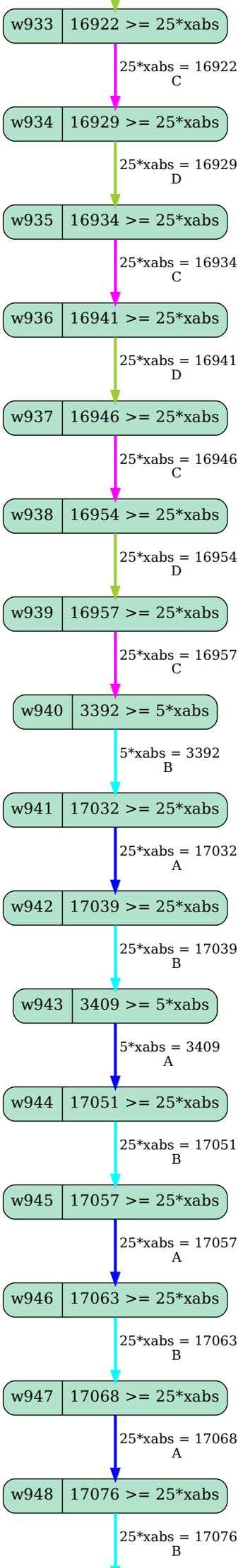
w933
16922 >= 25*xabs
25*xabs = 16922
C
w934
16929 >= 25*xabs
25*xabs = 16929
D
w935
16934 >= 25*xabs
25*xabs = 16934
C
w936
16941 >= 25*xabs
25*xabs = 16941
D
w937
16946 >= 25*xabs
25*xabs = 16946
C
w938
16954 >= 25*xabs
25*xabs = 16954
D
w939
16957 >= 25*xabs
25*xabs = 16957
C
w940
3392 >= 5*xabs
5*xabs = 3392
B
w941
17032 >= 25*xabs
25*xabs = 17032
A
w942
17039 >= 25*xabs
25*xabs = 17039
B
w943
3409 >= 5*xabs
5*xabs = 3409
A
w944
17051 >= 25*xabs
25*xabs = 17051
B
w945
17057 >= 25*xabs
25*xabs = 17057
A
w946
17063 >= 25*xabs
25*xabs = 17063
B
w947
17068 >= 25*xabs
25*xabs = 17068
A
w948
17076 >= 25*xabs
25*xabs = 17076
B

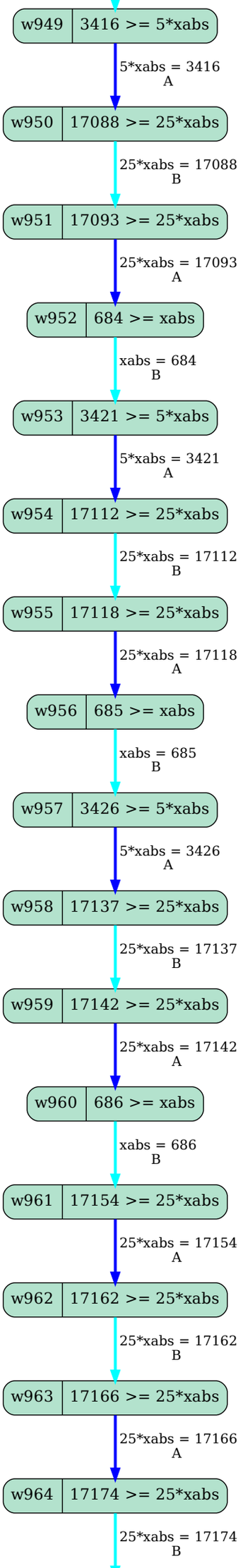
w949
3416 >= 5*xabs
5*xabs = 3416
A
w950
17088 >= 25*xabs
25*xabs = 17088
B
w951
17093 >= 25*xabs
25*xabs = 17093
A
w952
684 >= xabs
xabs = 684
B
w953
3421 >= 5*xabs
5*xabs = 3421
A
w954
17112 >= 25*xabs
25*xabs = 17112
B
w955
17118 >= 25*xabs
25*xabs = 17118
A
w956
685 >= xabs
xabs = 685
B
w957
3426 >= 5*xabs
5*xabs = 3426
A
w958
17137 >= 25*xabs
25*xabs = 17137
B
w959
17142 >= 25*xabs
25*xabs = 17142
A
w960
686 >= xabs
xabs = 686
B
w961
17154 >= 25*xabs
25*xabs = 17154
A
w962
17162 >= 25*xabs
25*xabs = 17162
B
w963
17166 >= 25*xabs
25*xabs = 17166
A
w964
17174 >= 25*xabs
25*xabs = 17174
B

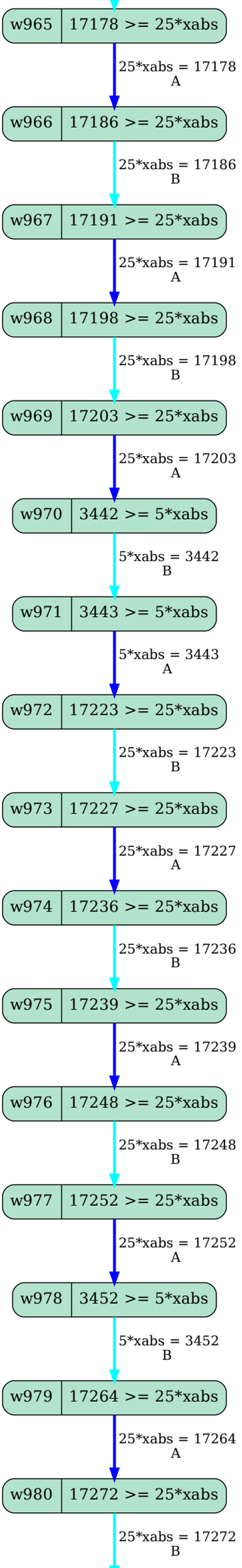
w965
17178 >= 25*xabs
25*xabs = 17178
A
w966
17186 >= 25*xabs
25*xabs = 17186
B
w967
17191 >= 25*xabs
25*xabs = 17191
A
w968
17198 >= 25*xabs
25*xabs = 17198
B
w969
17203 >= 25*xabs
25*xabs = 17203
A
w970
3442 >= 5*xabs
5*xabs = 3442
B
w971
3443 >= 5*xabs
5*xabs = 3443
A
w972
17223 >= 25*xabs
25*xabs = 17223
B
w973
17227 >= 25*xabs
25*xabs = 17227
A
w974
17236 >= 25*xabs
25*xabs = 17236
B
w975
17239 >= 25*xabs
25*xabs = 17239
A
w976
17248 >= 25*xabs
25*xabs = 17248
B
w977
17252 >= 25*xabs
25*xabs = 17252
A
w978
3452 >= 5*xabs
5*xabs = 3452
B
w979
17264 >= 25*xabs
25*xabs = 17264
A
w980
17272 >= 25*xabs
25*xabs = 17272
B

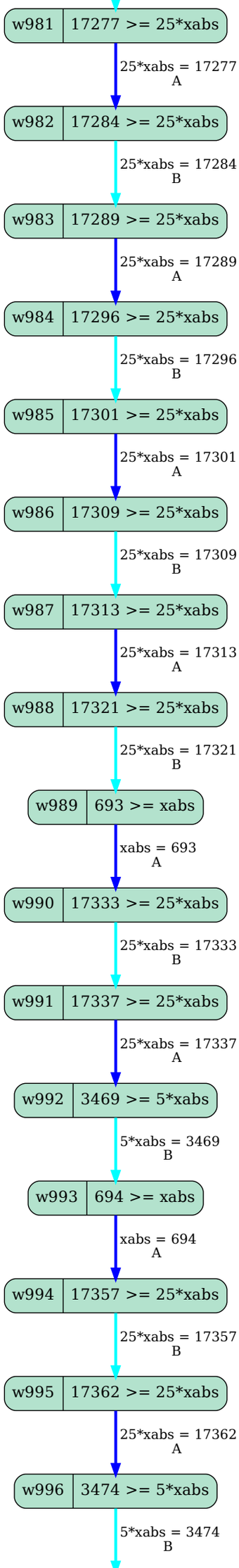
w981
17277 >= 25*xabs
25*xabs = 17277
A
w982
17284 >= 25*xabs
25*xabs = 17284
B
w983
17289 >= 25*xabs
25*xabs = 17289
A
w984
17296 >= 25*xabs
25*xabs = 17296
B
w985
17301 >= 25*xabs
25*xabs = 17301
A
w986
17309 >= 25*xabs
25*xabs = 17309
B
w987
17313 >= 25*xabs
25*xabs = 17313
A
w988
17321 >= 25*xabs
25*xabs = 17321
B
w989
693 >= xabs
xabs = 693
A
w990
17333 >= 25*xabs
25*xabs = 17333
B
w991
17337 >= 25*xabs
25*xabs = 17337
A
w992
3469 >= 5*xabs
5*xabs = 3469
B
w993
694 >= xabs
xabs = 694
A
w994
17357 >= 25*xabs
25*xabs = 17357
B
w995
17362 >= 25*xabs
25*xabs = 17362
A
w996
3474 >= 5*xabs
5*xabs = 3474
B

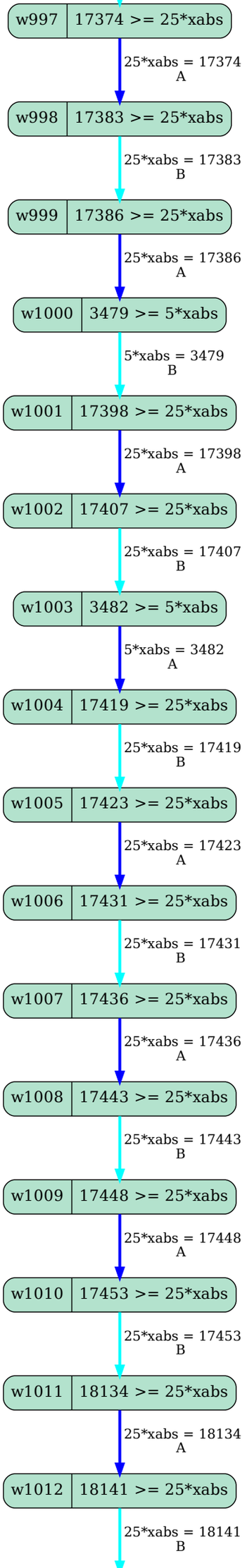
w997
17374 >= 25*xabs
25*xabs = 17374
A
w998
17383 >= 25*xabs
25*xabs = 17383
B
w999
17386 >= 25*xabs
25*xabs = 17386
A
w1000
3479 >= 5*xabs
5*xabs = 3479
B
w1001
17398 >= 25*xabs
25*xabs = 17398
A
w1002
17407 >= 25*xabs
25*xabs = 17407
B
w1003
3482 >= 5*xabs
5*xabs = 3482
A
w1004
17419 >= 25*xabs
25*xabs = 17419
B
w1005
17423 >= 25*xabs
25*xabs = 17423
A
w1006
17431 >= 25*xabs
25*xabs = 17431
B
w1007
17436 >= 25*xabs
25*xabs = 17436
A
w1008
17443 >= 25*xabs
25*xabs = 17443
B
w1009
17448 >= 25*xabs
25*xabs = 17448
A
w1010
17453 >= 25*xabs
25*xabs = 17453
B
w1011
18134 >= 25*xabs
25*xabs = 18134
A
w1012
18141 >= 25*xabs
25*xabs = 18141
B

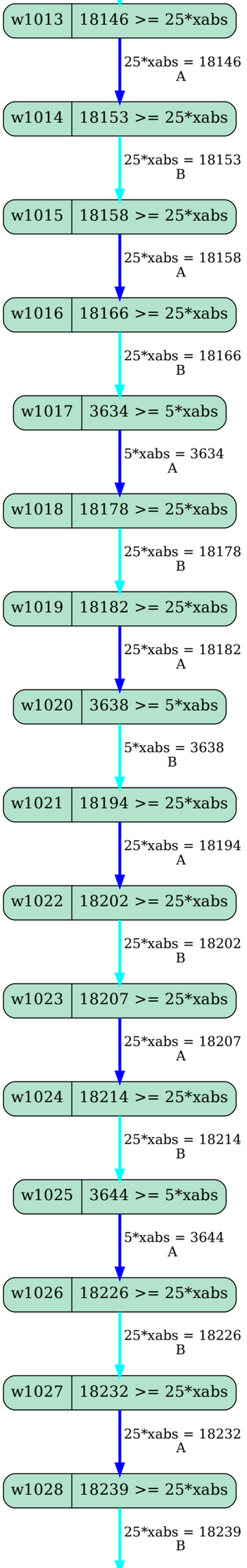
w1013
18146 >= 25*xabs
25*xabs = 18146
A
w1014
18153 >= 25*xabs
25*xabs = 18153
B
w1015
18158 >= 25*xabs
25*xabs = 18158
A
w1016
18166 >= 25*xabs
25*xabs = 18166
B
w1017
3634 >= 5*xabs
5*xabs = 3634
A
w1018
18178 >= 25*xabs
25*xabs = 18178
B
w1019
18182 >= 25*xabs
25*xabs = 18182
A
w1020
3638 >= 5*xabs
5*xabs = 3638
B
w1021
18194 >= 25*xabs
25*xabs = 18194
A
w1022
18202 >= 25*xabs
25*xabs = 18202
B
w1023
18207 >= 25*xabs
25*xabs = 18207
A
w1024
18214 >= 25*xabs
25*xabs = 18214
B
w1025
3644 >= 5*xabs
5*xabs = 3644
A
w1026
18226 >= 25*xabs
25*xabs = 18226
B
w1027
18232 >= 25*xabs
25*xabs = 18232
A
w1028
18239 >= 25*xabs
25*xabs = 18239
B

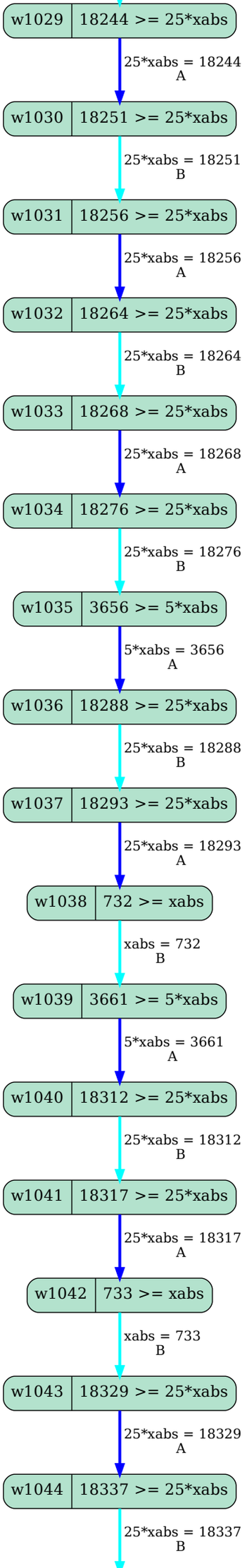
w1029
18244 >= 25*xabs
25*xabs = 18244
A
w1030
18251 >= 25*xabs
25*xabs = 18251
B
w1031
18256 >= 25*xabs
25*xabs = 18256
A
w1032
18264 >= 25*xabs
25*xabs = 18264
B
w1033
18268 >= 25*xabs
25*xabs = 18268
A
w1034
18276 >= 25*xabs
25*xabs = 18276
B
w1035
3656 >= 5*xabs
5*xabs = 3656
A
w1036
18288 >= 25*xabs
25*xabs = 18288
B
w1037
18293 >= 25*xabs
25*xabs = 18293
A
w1038
732 >= xabs
xabs = 732
B
w1039
3661 >= 5*xabs
5*xabs = 3661
A
w1040
18312 >= 25*xabs
25*xabs = 18312
B
w1041
18317 >= 25*xabs
25*xabs = 18317
A
w1042
733 >= xabs
xabs = 733
B
w1043
18329 >= 25*xabs
25*xabs = 18329
A
w1044
18337 >= 25*xabs
25*xabs = 18337
B

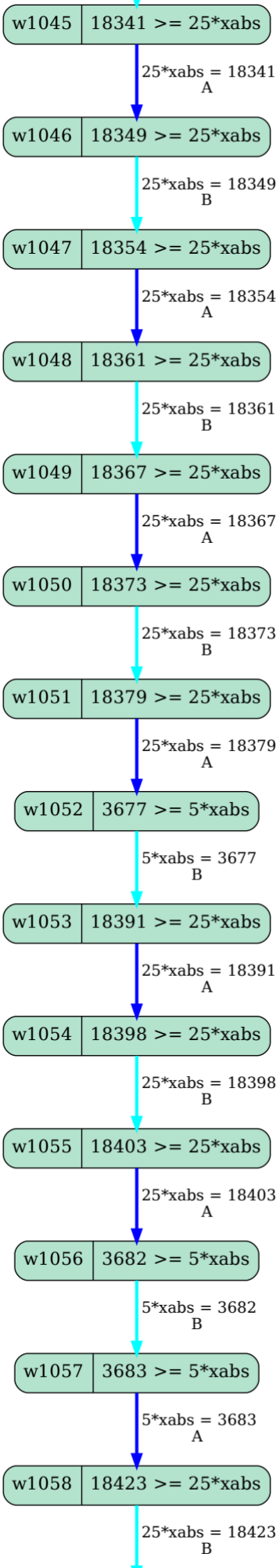
w1045
18341 >= 25*xabs
25*xabs = 18341
A
w1046
18349 >= 25*xabs
25*xabs = 18349
B
w1047
18354 >= 25*xabs
25*xabs = 18354
A
w1048
18361 >= 25*xabs
25*xabs = 18361
B
w1049
18367 >= 25*xabs
25*xabs = 18367
A
w1050
18373 >= 25*xabs
25*xabs = 18373
B
w1051
18379 >= 25*xabs
25*xabs = 18379
A
w1052
3677 >= 5*xabs
5*xabs = 3677
B
w1053
18391 >= 25*xabs
25*xabs = 18391
A
w1054
18398 >= 25*xabs
25*xabs = 18398
B
w1055
18403 >= 25*xabs
25*xabs = 18403
A
w1056
3682 >= 5*xabs
5*xabs = 3682
B
w1057
3683 >= 5*xabs
5*xabs = 3683
A
w1058
18423 >= 25*xabs
25*xabs = 18423
B

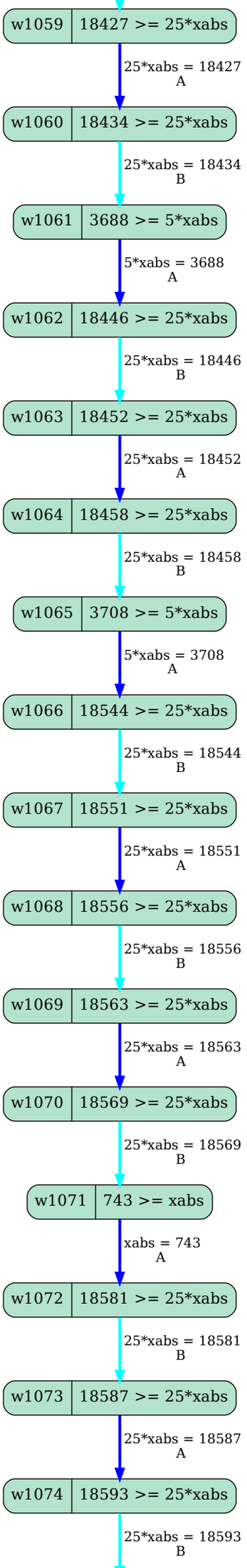
w1059
18427 >= 25*xabs
25*xabs = 18427
A
w1060
18434 >= 25*xabs
25*xabs = 18434
B
w1061
3688 >= 5*xabs
5*xabs = 3688
A
w1062
18446 >= 25*xabs
25*xabs = 18446
B
w1063
18452 >= 25*xabs
25*xabs = 18452
A
w1064
18458 >= 25*xabs
25*xabs = 18458
B
w1065
3708 >= 5*xabs
5*xabs = 3708
A
w1066
18544 >= 25*xabs
25*xabs = 18544
B
w1067
18551 >= 25*xabs
25*xabs = 18551
A
w1068
18556 >= 25*xabs
25*xabs = 18556
B
w1069
18563 >= 25*xabs
25*xabs = 18563
A
w1070
18569 >= 25*xabs
25*xabs = 18569
B
w1071
743 >= xabs
xabs = 743
A
w1072
18581 >= 25*xabs
25*xabs = 18581
B
w1073
18587 >= 25*xabs
25*xabs = 18587
A
w1074
18593 >= 25*xabs
25*xabs = 18593
B

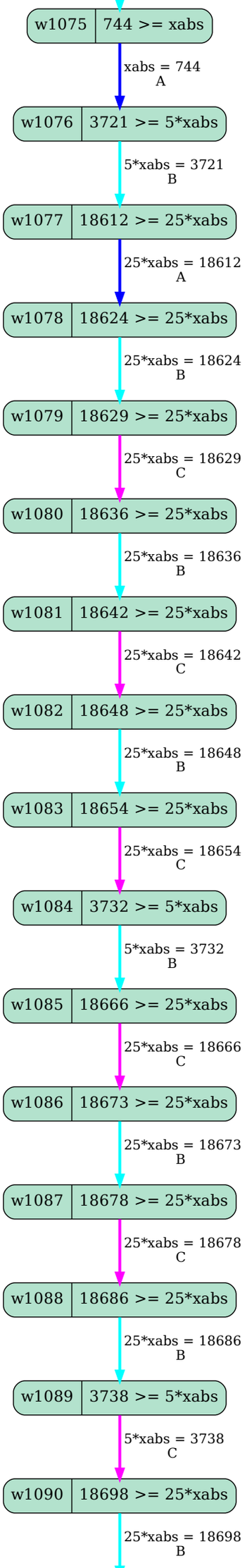
w1075
744 >= xabs
xabs = 744
A
w1076
3721 >= 5*xabs
5*xabs = 3721
B
w1077
18612 >= 25*xabs
25*xabs = 18612
A
w1078
18624 >= 25*xabs
25*xabs = 18624
B
w1079
18629 >= 25*xabs
25*xabs = 18629
C
w1080
18636 >= 25*xabs
25*xabs = 18636
B
w1081
18642 >= 25*xabs
25*xabs = 18642
C
w1082
18648 >= 25*xabs
25*xabs = 18648
B
w1083
18654 >= 25*xabs
25*xabs = 18654
C
w1084
3732 >= 5*xabs
5*xabs = 3732
B
w1085
18666 >= 25*xabs
25*xabs = 18666
C
w1086
18673 >= 25*xabs
25*xabs = 18673
B
w1087
18678 >= 25*xabs
25*xabs = 18678
C
w1088
18686 >= 25*xabs
25*xabs = 18686
B
w1089
3738 >= 5*xabs
5*xabs = 3738
C
w1090
18698 >= 25*xabs
25*xabs = 18698
B

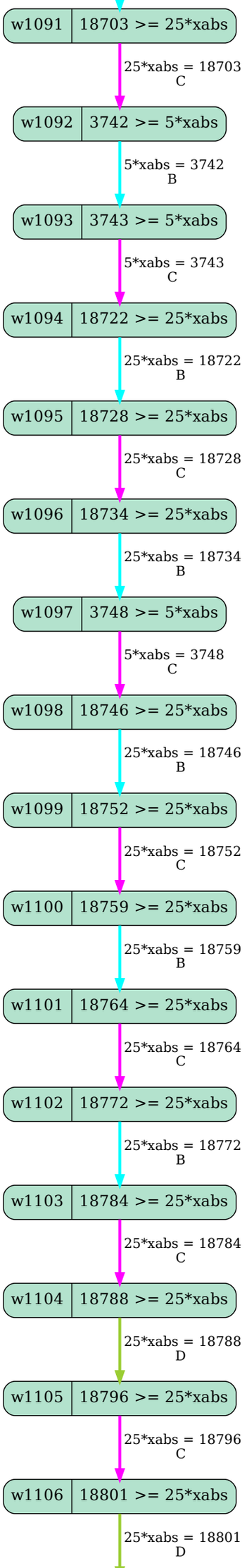
w1091
18703 >= 25*xabs
25*xabs = 18703
C
w1092
3742 >= 5*xabs
5*xabs = 3742
B
w1093
3743 >= 5*xabs
5*xabs = 3743
C
w1094
18722 >= 25*xabs
25*xabs = 18722
B
w1095
18728 >= 25*xabs
25*xabs = 18728
C
w1096
18734 >= 25*xabs
25*xabs = 18734
B
w1097
3748 >= 5*xabs
5*xabs = 3748
C
w1098
18746 >= 25*xabs
25*xabs = 18746
B
w1099
18752 >= 25*xabs
25*xabs = 18752
C
w1100
18759 >= 25*xabs
25*xabs = 18759
B
w1101
18764 >= 25*xabs
25*xabs = 18764
C
w1102
18772 >= 25*xabs
25*xabs = 18772
B
w1103
18784 >= 25*xabs
25*xabs = 18784
C
w1104
18788 >= 25*xabs
25*xabs = 18788
D
w1105
18796 >= 25*xabs
25*xabs = 18796
C
w1106
18801 >= 25*xabs
25*xabs = 18801
D

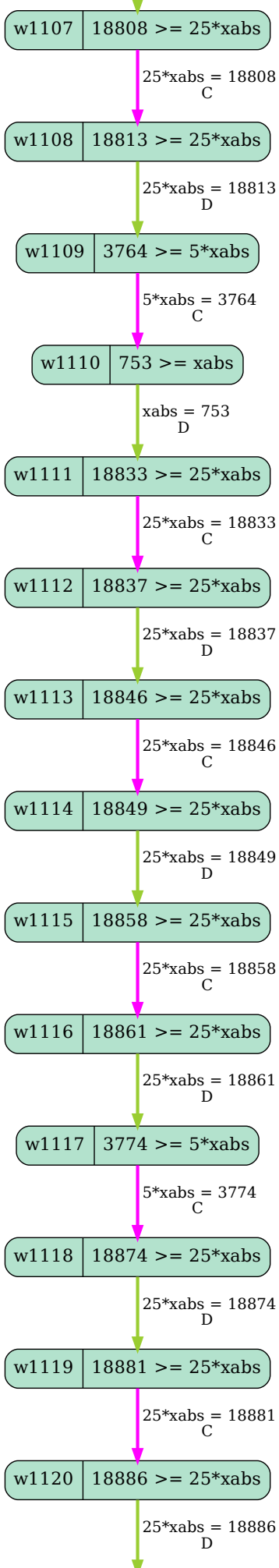
w1107
18808 >= 25*xabs
25*xabs = 18808
C
w1108
18813 >= 25*xabs
25*xabs = 18813
D
w1109
3764 >= 5*xabs
5*xabs = 3764
C
w1110
753 >= xabs
xabs = 753
D
w1111
18833 >= 25*xabs
25*xabs = 18833
C
w1112
18837 >= 25*xabs
25*xabs = 18837
D
w1113
18846 >= 25*xabs
25*xabs = 18846
C
w1114
18849 >= 25*xabs
25*xabs = 18849
D
w1115
18858 >= 25*xabs
25*xabs = 18858
C
w1116
18861 >= 25*xabs
25*xabs = 18861
D
w1117
3774 >= 5*xabs
5*xabs = 3774
C
w1118
18874 >= 25*xabs
25*xabs = 18874
D
w1119
18881 >= 25*xabs
25*xabs = 18881
C
w1120
18886 >= 25*xabs
25*xabs = 18886
D

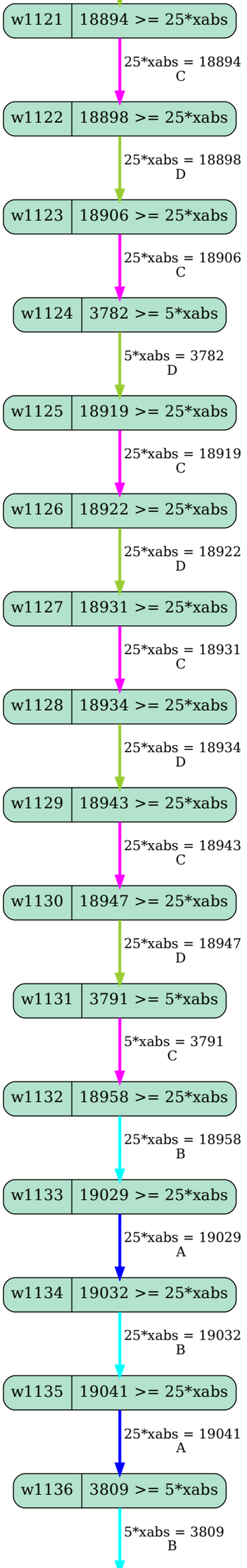
w1121
18894 >= 25*xabs
25*xabs = 18894
C
w1122
18898 >= 25*xabs
25*xabs = 18898
D
w1123
18906 >= 25*xabs
25*xabs = 18906
C
w1124
3782 >= 5*xabs
5*xabs = 3782
D
w1125
18919 >= 25*xabs
25*xabs = 18919
C
w1126
18922 >= 25*xabs
25*xabs = 18922
D
w1127
18931 >= 25*xabs
25*xabs = 18931
C
w1128
18934 >= 25*xabs
25*xabs = 18934
D
w1129
18943 >= 25*xabs
25*xabs = 18943
C
w1130
18947 >= 25*xabs
25*xabs = 18947
D
w1131
3791 >= 5*xabs
5*xabs = 3791
C
w1132
18958 >= 25*xabs
25*xabs = 18958
B
w1133
19029 >= 25*xabs
25*xabs = 19029
A
w1134
19032 >= 25*xabs
25*xabs = 19032
B
w1135
19041 >= 25*xabs
25*xabs = 19041
A
w1136
3809 >= 5*xabs
5*xabs = 3809
B

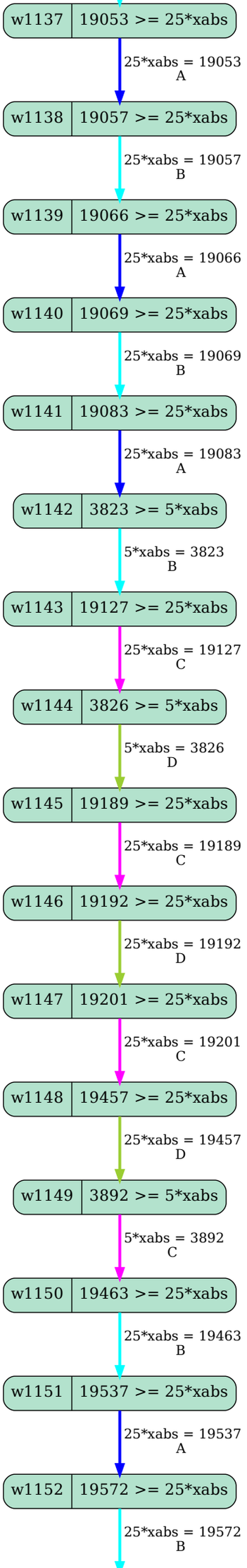
w1137
19053 >= 25*xabs
25*xabs = 19053
A
w1138
19057 >= 25*xabs
25*xabs = 19057
B
w1139
19066 >= 25*xabs
25*xabs = 19066
A
w1140
19069 >= 25*xabs
25*xabs = 19069
B
w1141
19083 >= 25*xabs
25*xabs = 19083
A
w1142
3823 >= 5*xabs
5*xabs = 3823
B
w1143
19127 >= 25*xabs
25*xabs = 19127
C
w1144
3826 >= 5*xabs
5*xabs = 3826
D
w1145
19189 >= 25*xabs
25*xabs = 19189
C
w1146
19192 >= 25*xabs
25*xabs = 19192
D
w1147
19201 >= 25*xabs
25*xabs = 19201
C
w1148
19457 >= 25*xabs
25*xabs = 19457
D
w1149
3892 >= 5*xabs
5*xabs = 3892
C
w1150
19463 >= 25*xabs
25*xabs = 19463
B
w1151
19537 >= 25*xabs
25*xabs = 19537
A
w1152
19572 >= 25*xabs
25*xabs = 19572
B

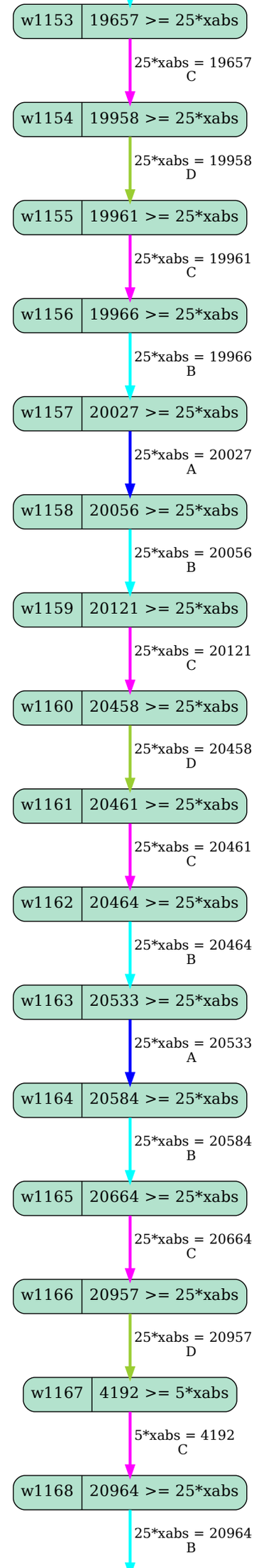
w1153
19657 >= 25*xabs
25*xabs = 19657
C
w1154
19958 >= 25*xabs
25*xabs = 19958
D
w1155
19961 >= 25*xabs
25*xabs = 19961
C
w1156
19966 >= 25*xabs
25*xabs = 19966
B
w1157
20027 >= 25*xabs
25*xabs = 20027
A
w1158
20056 >= 25*xabs
25*xabs = 20056
B
w1159
20121 >= 25*xabs
25*xabs = 20121
C
w1160
20458 >= 25*xabs
25*xabs = 20458
D
w1161
20461 >= 25*xabs
25*xabs = 20461
C
w1162
20464 >= 25*xabs
25*xabs = 20464
B
w1163
20533 >= 25*xabs
25*xabs = 20533
A
w1164
20584 >= 25*xabs
25*xabs = 20584
B
w1165
20664 >= 25*xabs
25*xabs = 20664
C
w1166
20957 >= 25*xabs
25*xabs = 20957
D
w1167
4192 >= 5*xabs
5*xabs = 4192
C
w1168
20964 >= 25*xabs
25*xabs = 20964
B

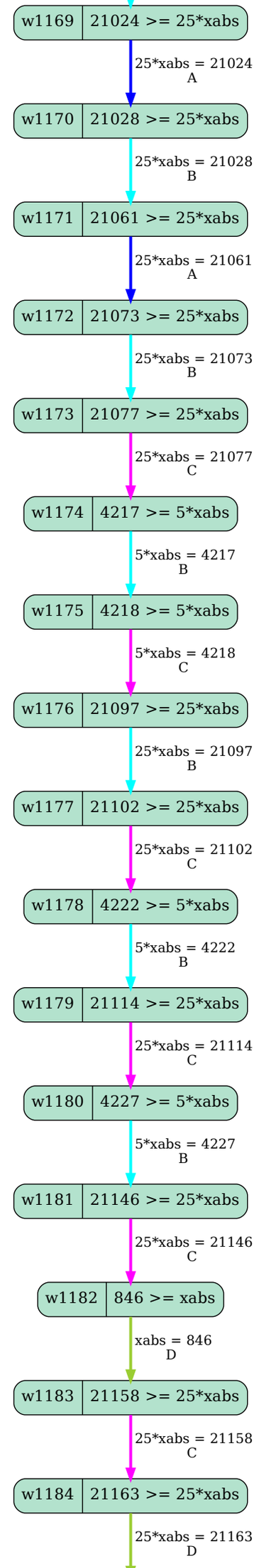
w1169
21024 >= 25*xabs
25*xabs = 21024
A
w1170
21028 >= 25*xabs
25*xabs = 21028
B
w1171
21061 >= 25*xabs
25*xabs = 21061
A
w1172
21073 >= 25*xabs
25*xabs = 21073
B
w1173
21077 >= 25*xabs
25*xabs = 21077
C
w1174
4217 >= 5*xabs
5*xabs = 4217
B
w1175
4218 >= 5*xabs
5*xabs = 4218
C
w1176
21097 >= 25*xabs
25*xabs = 21097
B
w1177
21102 >= 25*xabs
25*xabs = 21102
C
w1178
4222 >= 5*xabs
5*xabs = 4222
B
w1179
21114 >= 25*xabs
25*xabs = 21114
C
w1180
4227 >= 5*xabs
5*xabs = 4227
B
w1181
21146 >= 25*xabs
25*xabs = 21146
C
w1182
846 >= xabs
xabs = 846
D
w1183
21158 >= 25*xabs
25*xabs = 21158
C
w1184
21163 >= 25*xabs
25*xabs = 21163
D

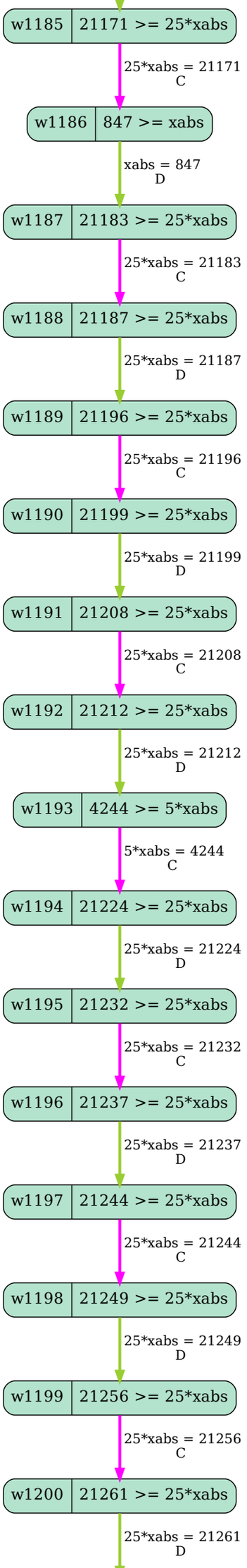
w1185
21171 >= 25*xabs
25*xabs = 21171
C
w1186
847 >= xabs
xabs = 847
D
w1187
21183 >= 25*xabs
25*xabs = 21183
C
w1188
21187 >= 25*xabs
25*xabs = 21187
D
w1189
21196 >= 25*xabs
25*xabs = 21196
C
w1190
21199 >= 25*xabs
25*xabs = 21199
D
w1191
21208 >= 25*xabs
25*xabs = 21208
C
w1192
21212 >= 25*xabs
25*xabs = 21212
D
w1193
4244 >= 5*xabs
5*xabs = 4244
C
w1194
21224 >= 25*xabs
25*xabs = 21224
D
w1195
21232 >= 25*xabs
25*xabs = 21232
C
w1196
21237 >= 25*xabs
25*xabs = 21237
D
w1197
21244 >= 25*xabs
25*xabs = 21244
C
w1198
21249 >= 25*xabs
25*xabs = 21249
D
w1199
21256 >= 25*xabs
25*xabs = 21256
C
w1200
21261 >= 25*xabs
25*xabs = 21261
D

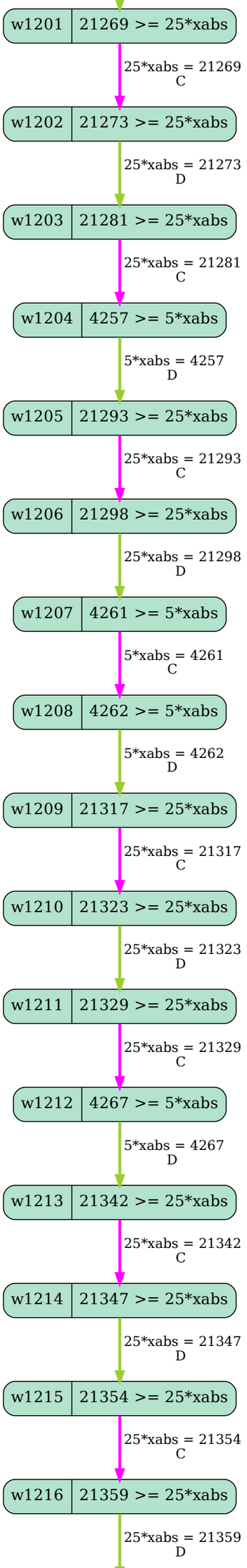
w1201
21269 >= 25*xabs
25*xabs = 21269
C
w1202
21273 >= 25*xabs
25*xabs = 21273
D
w1203
21281 >= 25*xabs
25*xabs = 21281
C
w1204
4257 >= 5*xabs
5*xabs = 4257
D
w1205
21293 >= 25*xabs
25*xabs = 21293
C
w1206
21298 >= 25*xabs
25*xabs = 21298
D
w1207
4261 >= 5*xabs
5*xabs = 4261
C
w1208
4262 >= 5*xabs
5*xabs = 4262
D
w1209
21317 >= 25*xabs
25*xabs = 21317
C
w1210
21323 >= 25*xabs
25*xabs = 21323
D
w1211
21329 >= 25*xabs
25*xabs = 21329
C
w1212
4267 >= 5*xabs
5*xabs = 4267
D
w1213
21342 >= 25*xabs
25*xabs = 21342
C
w1214
21347 >= 25*xabs
25*xabs = 21347
D
w1215
21354 >= 25*xabs
25*xabs = 21354
C
w1216
21359 >= 25*xabs
25*xabs = 21359
D

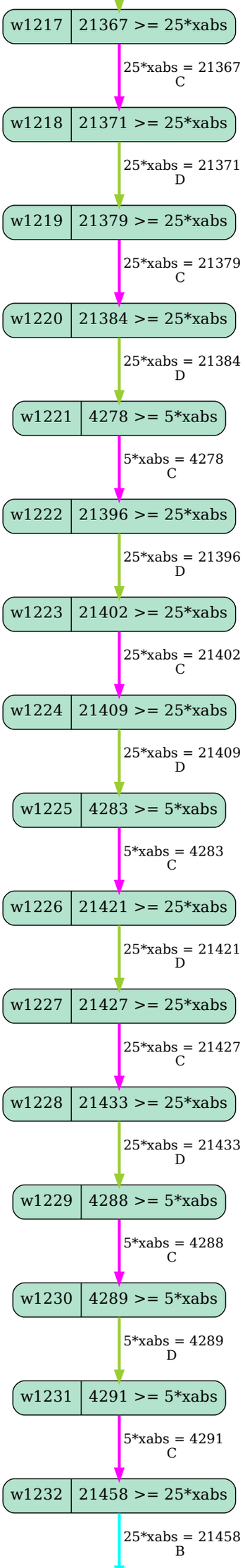
w1217
21367 >= 25*xabs
25*xabs = 21367
C
w1218
21371 >= 25*xabs
25*xabs = 21371
D
w1219
21379 >= 25*xabs
25*xabs = 21379
C
w1220
21384 >= 25*xabs
25*xabs = 21384
D
w1221
4278 >= 5*xabs
5*xabs = 4278
C
w1222
21396 >= 25*xabs
25*xabs = 21396
D
w1223
21402 >= 25*xabs
25*xabs = 21402
C
w1224
21409 >= 25*xabs
25*xabs = 21409
D
w1225
4283 >= 5*xabs
5*xabs = 4283
C
w1226
21421 >= 25*xabs
25*xabs = 21421
D
w1227
21427 >= 25*xabs
25*xabs = 21427
C
w1228
21433 >= 25*xabs
25*xabs = 21433
D
w1229
4288 >= 5*xabs
5*xabs = 4288
C
w1230
4289 >= 5*xabs
5*xabs = 4289
D
w1231
4291 >= 5*xabs
5*xabs = 4291
C
w1232
21458 >= 25*xabs
25*xabs = 21458
B

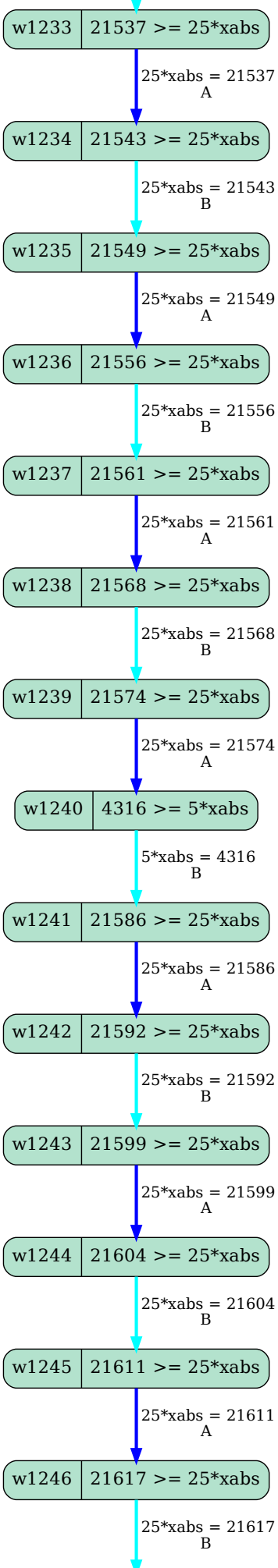
w1233
21537 >= 25*xabs
25*xabs = 21537
A
w1234
21543 >= 25*xabs
25*xabs = 21543
B
w1235
21549 >= 25*xabs
25*xabs = 21549
A
w1236
21556 >= 25*xabs
25*xabs = 21556
B
w1237
21561 >= 25*xabs
25*xabs = 21561
A
w1238
21568 >= 25*xabs
25*xabs = 21568
B
w1239
21574 >= 25*xabs
25*xabs = 21574
A
w1240
4316 >= 5*xabs
5*xabs = 4316
B
w1241
21586 >= 25*xabs
25*xabs = 21586
A
w1242
21592 >= 25*xabs
25*xabs = 21592
B
w1243
21599 >= 25*xabs
25*xabs = 21599
A
w1244
21604 >= 25*xabs
25*xabs = 21604
B
w1245
21611 >= 25*xabs
25*xabs = 21611
A
w1246
21617 >= 25*xabs
25*xabs = 21617
B

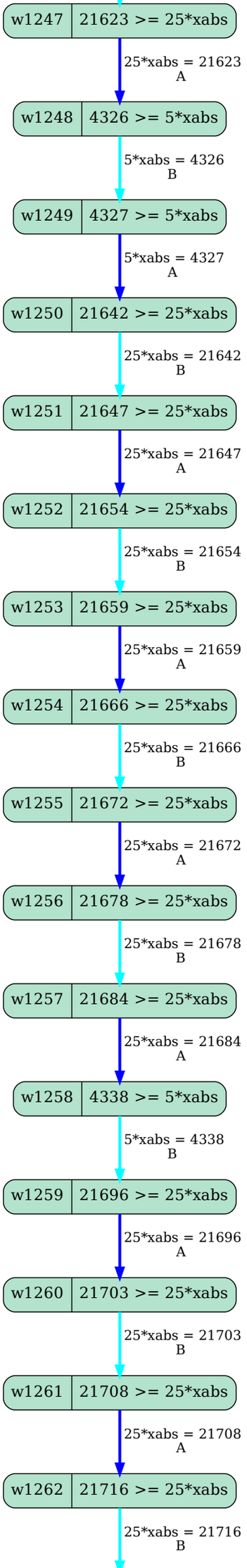
w1247
21623 >= 25*xabs
25*xabs = 21623
A
w1248
4326 >= 5*xabs
5*xabs = 4326
B
w1249
4327 >= 5*xabs
5*xabs = 4327
A
w1250
21642 >= 25*xabs
25*xabs = 21642
B
w1251
21647 >= 25*xabs
25*xabs = 21647
A
w1252
21654 >= 25*xabs
25*xabs = 21654
B
w1253
21659 >= 25*xabs
25*xabs = 21659
A
w1254
21666 >= 25*xabs
25*xabs = 21666
B
w1255
21672 >= 25*xabs
25*xabs = 21672
A
w1256
21678 >= 25*xabs
25*xabs = 21678
B
w1257
21684 >= 25*xabs
25*xabs = 21684
A
w1258
4338 >= 5*xabs
5*xabs = 4338
B
w1259
21696 >= 25*xabs
25*xabs = 21696
A
w1260
21703 >= 25*xabs
25*xabs = 21703
B
w1261
21708 >= 25*xabs
25*xabs = 21708
A
w1262
21716 >= 25*xabs
25*xabs = 21716
B

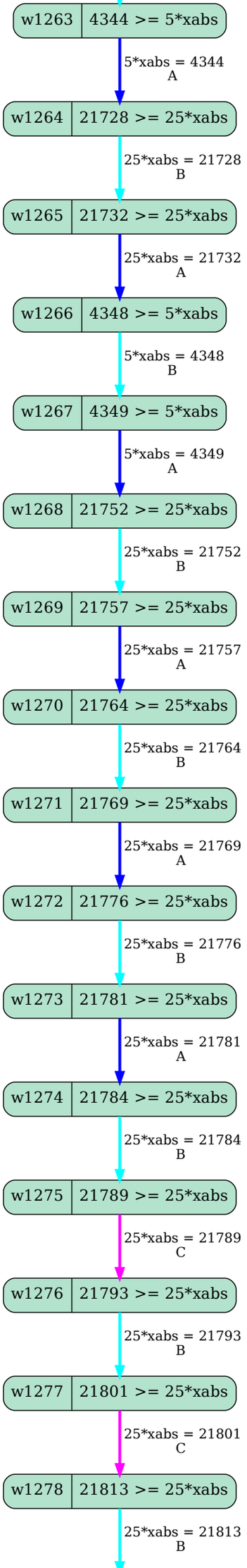
w1263
4344 >= 5*xabs
5*xabs = 4344
A
w1264
21728 >= 25*xabs
25*xabs = 21728
B
w1265
21732 >= 25*xabs
25*xabs = 21732
A
w1266
4348 >= 5*xabs
5*xabs = 4348
B
w1267
4349 >= 5*xabs
5*xabs = 4349
A
w1268
21752 >= 25*xabs
25*xabs = 21752
B
w1269
21757 >= 25*xabs
25*xabs = 21757
A
w1270
21764 >= 25*xabs
25*xabs = 21764
B
w1271
21769 >= 25*xabs
25*xabs = 21769
A
w1272
21776 >= 25*xabs
25*xabs = 21776
B
w1273
21781 >= 25*xabs
25*xabs = 21781
A
w1274
21784 >= 25*xabs
25*xabs = 21784
B
w1275
21789 >= 25*xabs
25*xabs = 21789
C
w1276
21793 >= 25*xabs
25*xabs = 21793
B
w1277
21801 >= 25*xabs
25*xabs = 21801
C
w1278
21813 >= 25*xabs
25*xabs = 21813
B

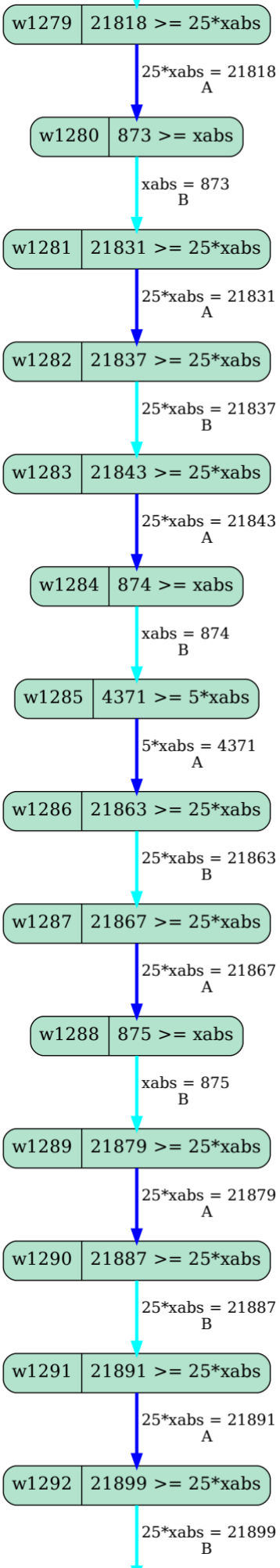
w1279
21818 >= 25*xabs
25*xabs = 21818
A
w1280
873 >= xabs
xabs = 873
B
w1281
21831 >= 25*xabs
25*xabs = 21831
A
w1282
21837 >= 25*xabs
25*xabs = 21837
B
w1283
21843 >= 25*xabs
25*xabs = 21843
A
w1284
874 >= xabs
xabs = 874
B
w1285
4371 >= 5*xabs
5*xabs = 4371
A
w1286
21863 >= 25*xabs
25*xabs = 21863
B
w1287
21867 >= 25*xabs
25*xabs = 21867
A
w1288
875 >= xabs
xabs = 875
B
w1289
21879 >= 25*xabs
25*xabs = 21879
A
w1290
21887 >= 25*xabs
25*xabs = 21887
B
w1291
21891 >= 25*xabs
25*xabs = 21891
A
w1292
21899 >= 25*xabs
25*xabs = 21899
B

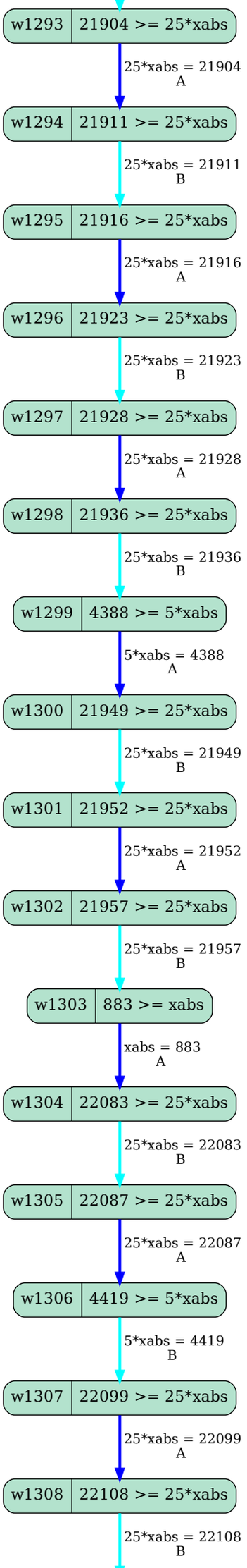
w1293
21904 >= 25*xabs
25*xabs = 21904
A
w1294
21911 >= 25*xabs
25*xabs = 21911
B
w1295
21916 >= 25*xabs
25*xabs = 21916
A
w1296
21923 >= 25*xabs
25*xabs = 21923
B
w1297
21928 >= 25*xabs
25*xabs = 21928
A
w1298
21936 >= 25*xabs
25*xabs = 21936
B
w1299
4388 >= 5*xabs
5*xabs = 4388
A
w1300
21949 >= 25*xabs
25*xabs = 21949
B
w1301
21952 >= 25*xabs
25*xabs = 21952
A
w1302
21957 >= 25*xabs
25*xabs = 21957
B
w1303
883 >= xabs
xabs = 883
A
w1304
22083 >= 25*xabs
25*xabs = 22083
B
w1305
22087 >= 25*xabs
25*xabs = 22087
A
w1306
4419 >= 5*xabs
5*xabs = 4419
B
w1307
22099 >= 25*xabs
25*xabs = 22099
A
w1308
22108 >= 25*xabs
25*xabs = 22108
B

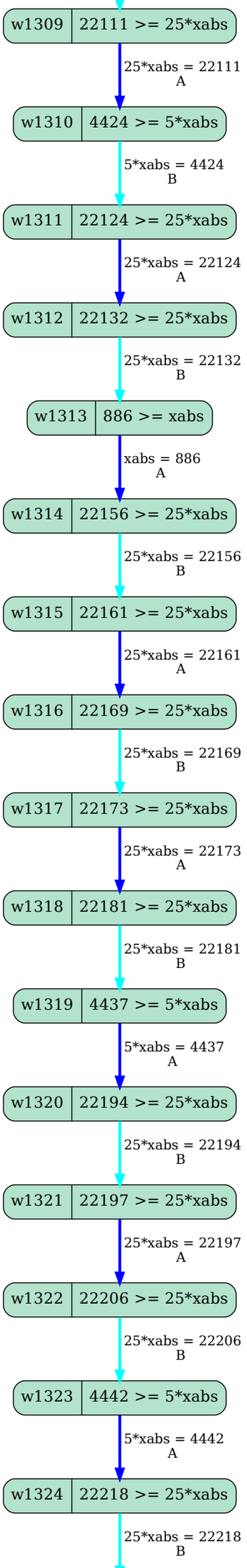
w1309
22111 >= 25*xabs
25*xabs = 22111
A
w1310
4424 >= 5*xabs
5*xabs = 4424
B
w1311
22124 >= 25*xabs
25*xabs = 22124
A
w1312
22132 >= 25*xabs
25*xabs = 22132
B
w1313
886 >= xabs
xabs = 886
A
w1314
22156 >= 25*xabs
25*xabs = 22156
B
w1315
22161 >= 25*xabs
25*xabs = 22161
A
w1316
22169 >= 25*xabs
25*xabs = 22169
B
w1317
22173 >= 25*xabs
25*xabs = 22173
A
w1318
22181 >= 25*xabs
25*xabs = 22181
B
w1319
4437 >= 5*xabs
5*xabs = 4437
A
w1320
22194 >= 25*xabs
25*xabs = 22194
B
w1321
22197 >= 25*xabs
25*xabs = 22197
A
w1322
22206 >= 25*xabs
25*xabs = 22206
B
w1323
4442 >= 5*xabs
5*xabs = 4442
A
w1324
22218 >= 25*xabs
25*xabs = 22218
B

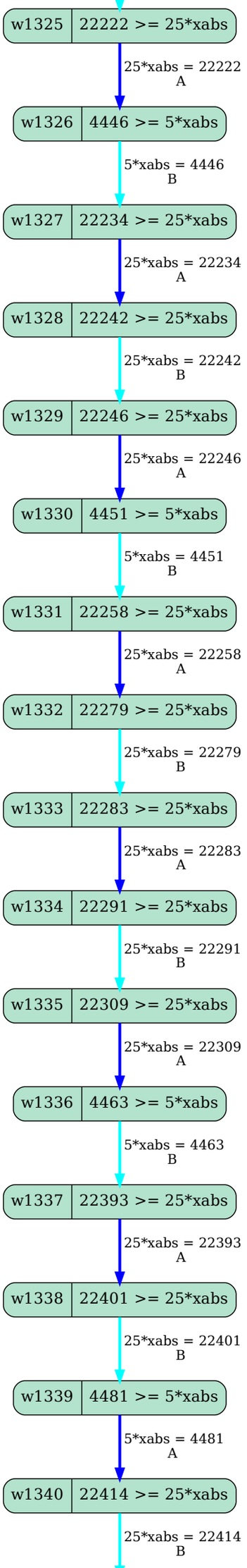
w1325
22222 >= 25*xabs
25*xabs = 22222
A
w1326
4446 >= 5*xabs
5*xabs = 4446
B
w1327
22234 >= 25*xabs
25*xabs = 22234
A
w1328
22242 >= 25*xabs
25*xabs = 22242
B
w1329
22246 >= 25*xabs
25*xabs = 22246
A
w1330
4451 >= 5*xabs
5*xabs = 4451
B
w1331
22258 >= 25*xabs
25*xabs = 22258
A
w1332
22279 >= 25*xabs
25*xabs = 22279
B
w1333
22283 >= 25*xabs
25*xabs = 22283
A
w1334
22291 >= 25*xabs
25*xabs = 22291
B
w1335
22309 >= 25*xabs
25*xabs = 22309
A
w1336
4463 >= 5*xabs
5*xabs = 4463
B
w1337
22393 >= 25*xabs
25*xabs = 22393
A
w1338
22401 >= 25*xabs
25*xabs = 22401
B
w1339
4481 >= 5*xabs
5*xabs = 4481
A
w1340
22414 >= 25*xabs
25*xabs = 22414
B

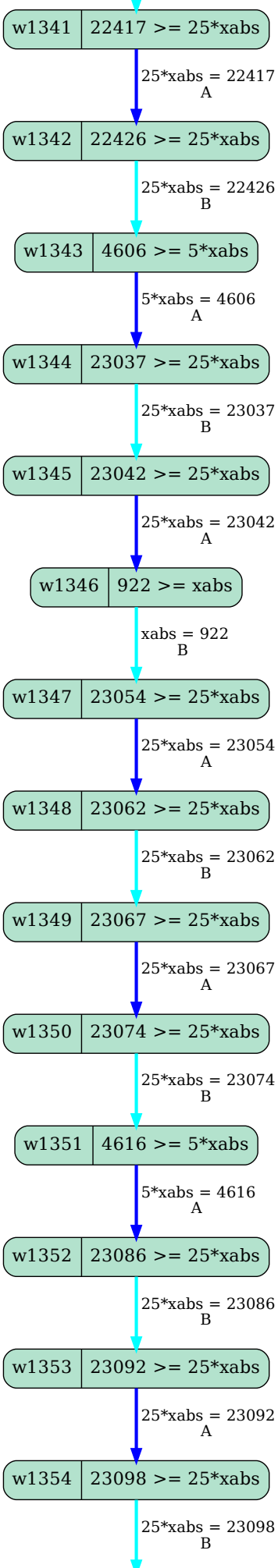
w1341
22417 >= 25*xabs
25*xabs = 22417
A
w1342
22426 >= 25*xabs
25*xabs = 22426
B
w1343
4606 >= 5*xabs
5*xabs = 4606
A
w1344
23037 >= 25*xabs
25*xabs = 23037
B
w1345
23042 >= 25*xabs
25*xabs = 23042
A
w1346
922 >= xabs
xabs = 922
B
w1347
23054 >= 25*xabs
25*xabs = 23054
A
w1348
23062 >= 25*xabs
25*xabs = 23062
B
w1349
23067 >= 25*xabs
25*xabs = 23067
A
w1350
23074 >= 25*xabs
25*xabs = 23074
B
w1351
4616 >= 5*xabs
5*xabs = 4616
A
w1352
23086 >= 25*xabs
25*xabs = 23086
B
w1353
23092 >= 25*xabs
25*xabs = 23092
A
w1354
23098 >= 25*xabs
25*xabs = 23098
B

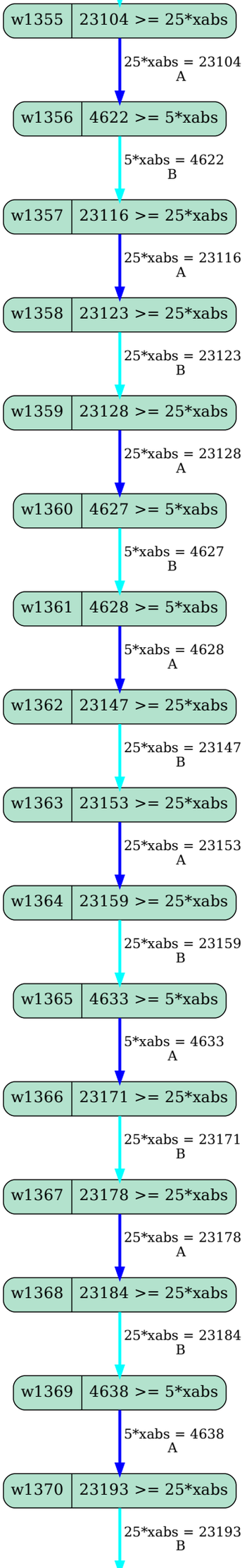
w1355
23104 >= 25*xabs
25*xabs = 23104
A
w1356
4622 >= 5*xabs
5*xabs = 4622
B
w1357
23116 >= 25*xabs
25*xabs = 23116
A
w1358
23123 >= 25*xabs
25*xabs = 23123
B
w1359
23128 >= 25*xabs
25*xabs = 23128
A
w1360
4627 >= 5*xabs
5*xabs = 4627
B
w1361
4628 >= 5*xabs
5*xabs = 4628
A
w1362
23147 >= 25*xabs
25*xabs = 23147
B
w1363
23153 >= 25*xabs
25*xabs = 23153
A
w1364
23159 >= 25*xabs
25*xabs = 23159
B
w1365
4633 >= 5*xabs
5*xabs = 4633
A
w1366
23171 >= 25*xabs
25*xabs = 23171
B
w1367
23178 >= 25*xabs
25*xabs = 23178
A
w1368
23184 >= 25*xabs
25*xabs = 23184
B
w1369
4638 >= 5*xabs
5*xabs = 4638
A
w1370
23193 >= 25*xabs
25*xabs = 23193
B

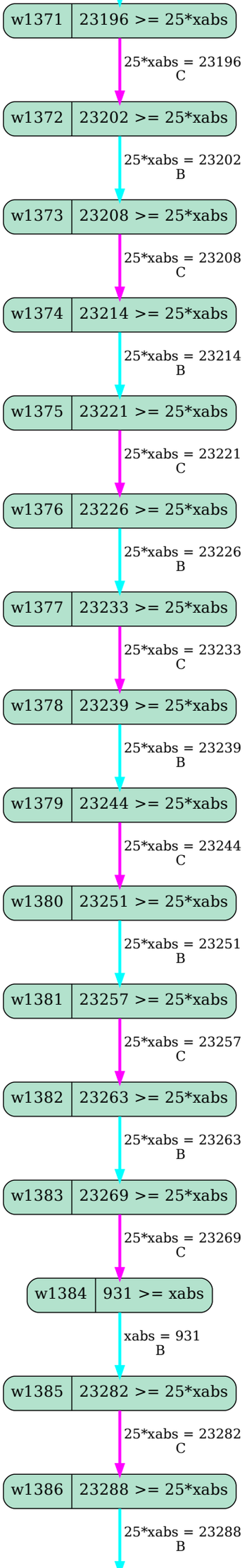
w1371
23196 >= 25*xabs
25*xabs = 23196
C
w1372
23202 >= 25*xabs
25*xabs = 23202
B
w1373
23208 >= 25*xabs
25*xabs = 23208
C
w1374
23214 >= 25*xabs
25*xabs = 23214
B
w1375
23221 >= 25*xabs
25*xabs = 23221
C
w1376
23226 >= 25*xabs
25*xabs = 23226
B
w1377
23233 >= 25*xabs
25*xabs = 23233
C
w1378
23239 >= 25*xabs
25*xabs = 23239
B
w1379
23244 >= 25*xabs
25*xabs = 23244
C
w1380
23251 >= 25*xabs
25*xabs = 23251
B
w1381
23257 >= 25*xabs
25*xabs = 23257
C
w1382
23263 >= 25*xabs
25*xabs = 23263
B
w1383
23269 >= 25*xabs
25*xabs = 23269
C
w1384
931 >= xabs
xabs = 931
B
w1385
23282 >= 25*xabs
25*xabs = 23282
C
w1386
23288 >= 25*xabs
25*xabs = 23288
B

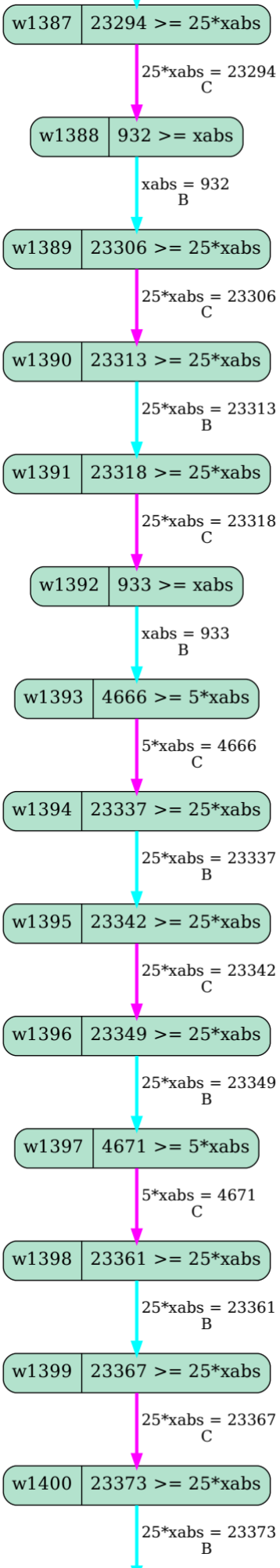
w1387
23294 >= 25*xabs
25*xabs = 23294
C
w1388
932 >= xabs
xabs = 932
B
w1389
23306 >= 25*xabs
25*xabs = 23306
C
w1390
23313 >= 25*xabs
25*xabs = 23313
B
w1391
23318 >= 25*xabs
25*xabs = 23318
C
w1392
933 >= xabs
xabs = 933
B
w1393
4666 >= 5*xabs
5*xabs = 4666
C
w1394
23337 >= 25*xabs
25*xabs = 23337
B
w1395
23342 >= 25*xabs
25*xabs = 23342
C
w1396
23349 >= 25*xabs
25*xabs = 23349
B
w1397
4671 >= 5*xabs
5*xabs = 4671
C
w1398
23361 >= 25*xabs
25*xabs = 23361
B
w1399
23367 >= 25*xabs
25*xabs = 23367
C
w1400
23373 >= 25*xabs
25*xabs = 23373
B

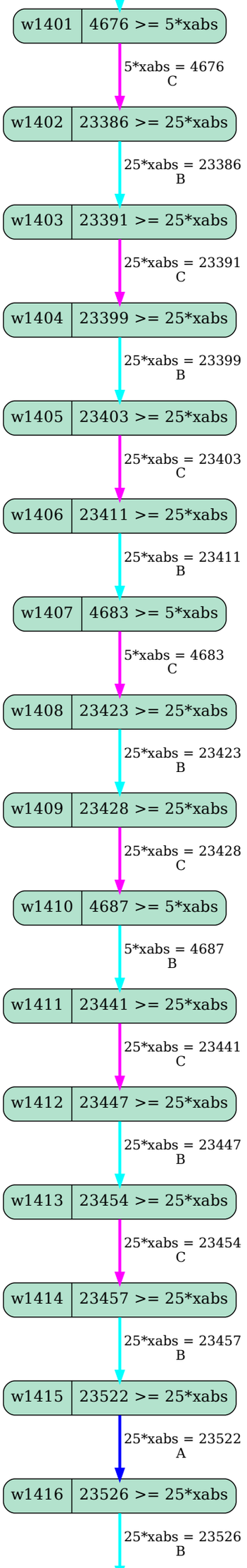
w1401
4676 >= 5*xabs
5*xabs = 4676
C
w1402
23386 >= 25*xabs
25*xabs = 23386
B
w1403
23391 >= 25*xabs
25*xabs = 23391
C
w1404
23399 >= 25*xabs
25*xabs = 23399
B
w1405
23403 >= 25*xabs
25*xabs = 23403
C
w1406
23411 >= 25*xabs
25*xabs = 23411
B
w1407
4683 >= 5*xabs
5*xabs = 4683
C
w1408
23423 >= 25*xabs
25*xabs = 23423
B
w1409
23428 >= 25*xabs
25*xabs = 23428
C
w1410
4687 >= 5*xabs
5*xabs = 4687
B
w1411
23441 >= 25*xabs
25*xabs = 23441
C
w1412
23447 >= 25*xabs
25*xabs = 23447
B
w1413
23454 >= 25*xabs
25*xabs = 23454
C
w1414
23457 >= 25*xabs
25*xabs = 23457
B
w1415
23522 >= 25*xabs
25*xabs = 23522
A
w1416
23526 >= 25*xabs
25*xabs = 23526
B

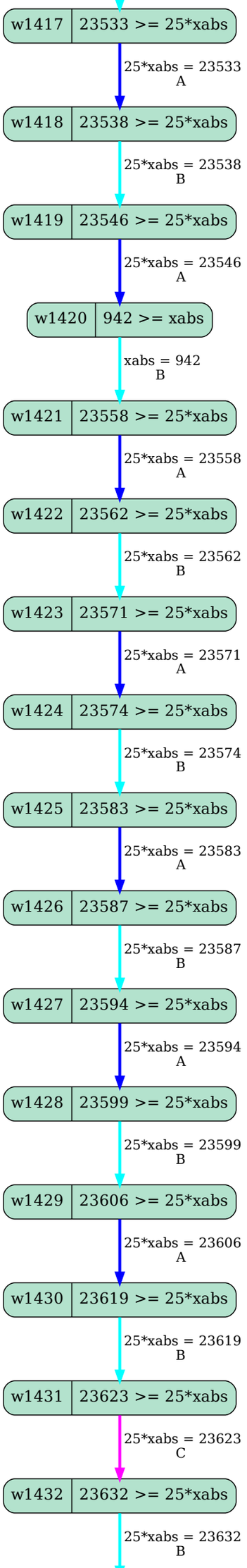
w1417
23533 >= 25*xabs
25*xabs = 23533
A
w1418
23538 >= 25*xabs
25*xabs = 23538
B
w1419
23546 >= 25*xabs
25*xabs = 23546
A
w1420
942 >= xabs
xabs = 942
B
w1421
23558 >= 25*xabs
25*xabs = 23558
A
w1422
23562 >= 25*xabs
25*xabs = 23562
B
w1423
23571 >= 25*xabs
25*xabs = 23571
A
w1424
23574 >= 25*xabs
25*xabs = 23574
B
w1425
23583 >= 25*xabs
25*xabs = 23583
A
w1426
23587 >= 25*xabs
25*xabs = 23587
B
w1427
23594 >= 25*xabs
25*xabs = 23594
A
w1428
23599 >= 25*xabs
25*xabs = 23599
B
w1429
23606 >= 25*xabs
25*xabs = 23606
A
w1430
23619 >= 25*xabs
25*xabs = 23619
B
w1431
23623 >= 25*xabs
25*xabs = 23623
C
w1432
23632 >= 25*xabs
25*xabs = 23632
B

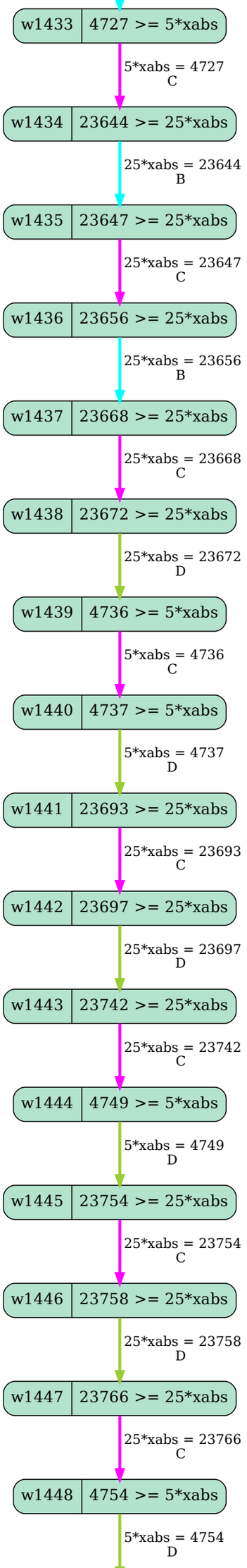
w1433
4727 >= 5*xabs
5*xabs = 4727
C
w1434
23644 >= 25*xabs
25*xabs = 23644
B
w1435
23647 >= 25*xabs
25*xabs = 23647
C
w1436
23656 >= 25*xabs
25*xabs = 23656
B
w1437
23668 >= 25*xabs
25*xabs = 23668
C
w1438
23672 >= 25*xabs
25*xabs = 23672
D
w1439
4736 >= 5*xabs
5*xabs = 4736
C
w1440
4737 >= 5*xabs
5*xabs = 4737
D
w1441
23693 >= 25*xabs
25*xabs = 23693
C
w1442
23697 >= 25*xabs
25*xabs = 23697
D
w1443
23742 >= 25*xabs
25*xabs = 23742
C
w1444
4749 >= 5*xabs
5*xabs = 4749
D
w1445
23754 >= 25*xabs
25*xabs = 23754
C
w1446
23758 >= 25*xabs
25*xabs = 23758
D
w1447
23766 >= 25*xabs
25*xabs = 23766
C
w1448
4754 >= 5*xabs
5*xabs = 4754
D

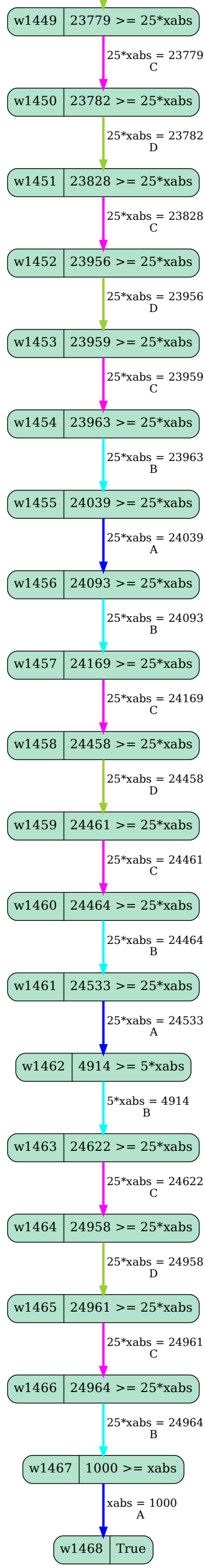
w1449
23779 >= 25*xabs
25*xabs = 23779
C
w1450
23782 >= 25*xabs
25*xabs = 23782
D
w1451
23828 >= 25*xabs
25*xabs = 23828
C
w1452
23956 >= 25*xabs
25*xabs = 23956
D
w1453
23959 >= 25*xabs
25*xabs = 23959
C
w1454
23963 >= 25*xabs
25*xabs = 23963
B
w1455
24039 >= 25*xabs
25*xabs = 24039
A
w1456
24093 >= 25*xabs
25*xabs = 24093
B
w1457
24169 >= 25*xabs
25*xabs = 24169
C
w1458
24458 >= 25*xabs
25*xabs = 24458
D
w1459
24461 >= 25*xabs
25*xabs = 24461
C
w1460
24464 >= 25*xabs
25*xabs = 24464
B
w1461
24533 >= 25*xabs
25*xabs = 24533
A
w1462
4914 >= 5*xabs
5*xabs = 4914
B
w1463
24622 >= 25*xabs
25*xabs = 24622
C
w1464
24958 >= 25*xabs
25*xabs = 24958
D
w1465
24961 >= 25*xabs
25*xabs = 24961
C
w1466
24964 >= 25*xabs
25*xabs = 24964
B
w1467
1000 >= xabs
xabs = 1000
A
w1468
True