blowup-400.imi

Generated by IMITATOR 3.4-beta "Cheese Durian"
Build: develop/6908f5d
Generation time: Tue Jan 23, 2024 10:12:55

3 clocks	5 parameters	Initial
x y xabs	p1 p2 p3 t tprime	p1 >= 0 & p2 >= 0 & p3 >= 0 & t >= 0 & tprime >= 0 & x = 0 & y = 0 & xabs = 0

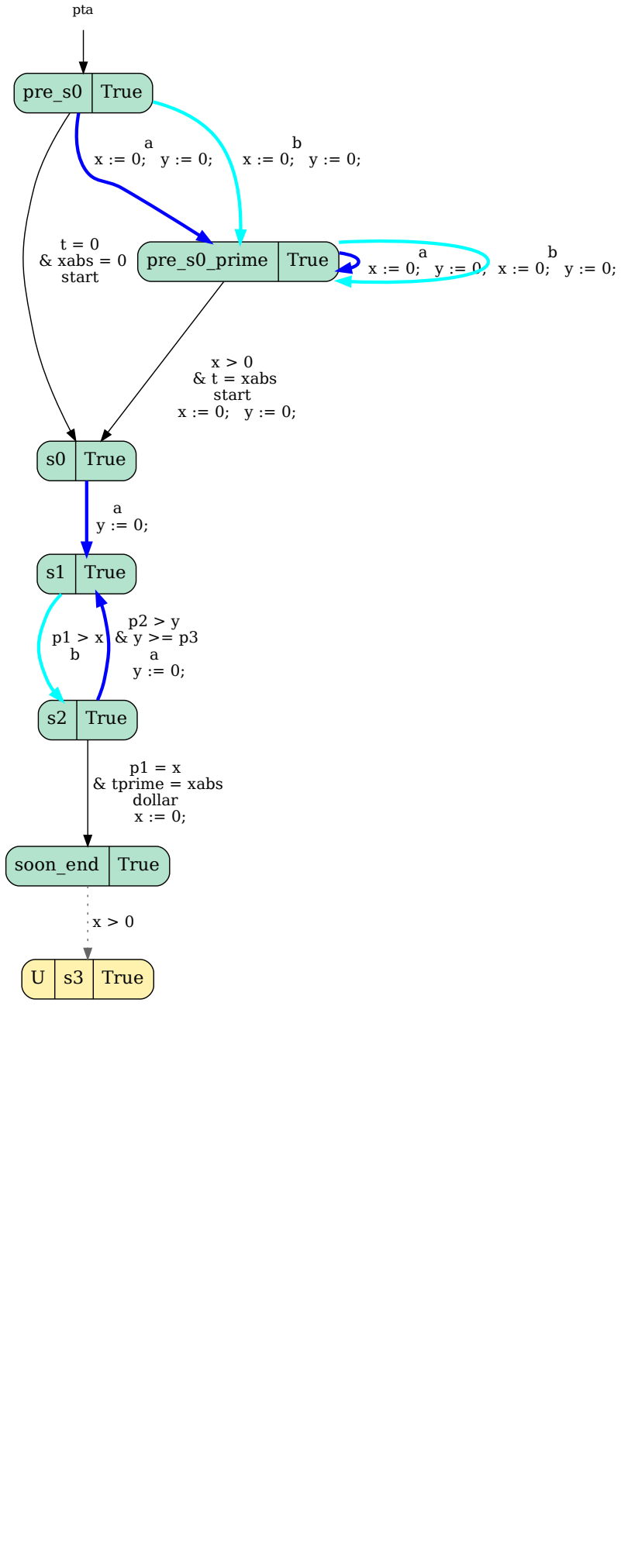

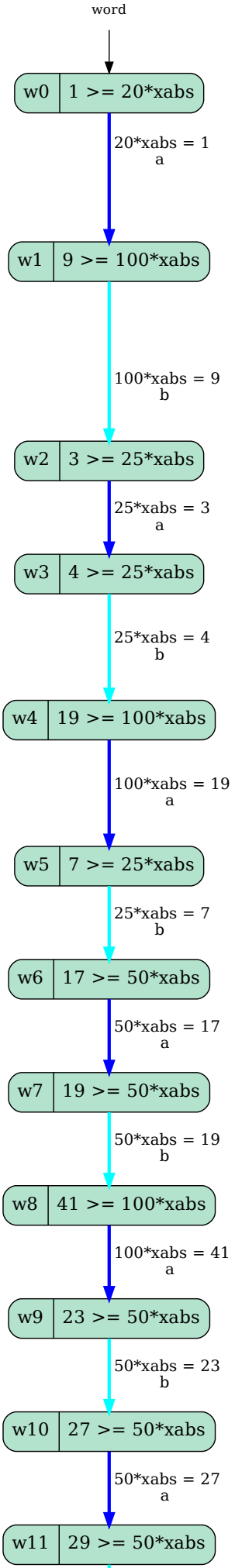

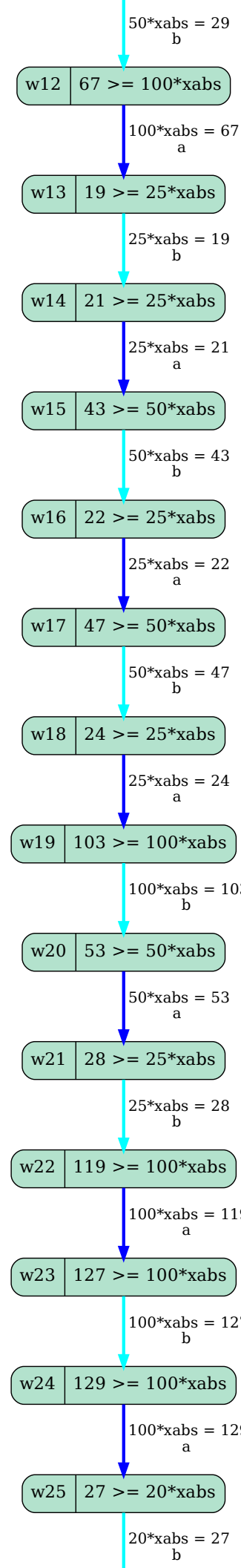
50*xabs = 29
b
w12
67 >= 100*xabs
100*xabs = 67
a
w13
19 >= 25*xabs
25*xabs = 19
b
w14
21 >= 25*xabs
25*xabs = 21
a
w15
43 >= 50*xabs
50*xabs = 43
b
w16
22 >= 25*xabs
25*xabs = 22
a
w17
47 >= 50*xabs
50*xabs = 47
b
w18
24 >= 25*xabs
25*xabs = 24
a
w19
103 >= 100*xabs
100*xabs = 103
b
w20
53 >= 50*xabs
50*xabs = 53
a
w21
28 >= 25*xabs
25*xabs = 28
b
w22
119 >= 100*xabs
100*xabs = 119
a
w23
127 >= 100*xabs
100*xabs = 127
b
w24
129 >= 100*xabs
100*xabs = 129
a
w25
27 >= 20*xabs
20*xabs = 27
b

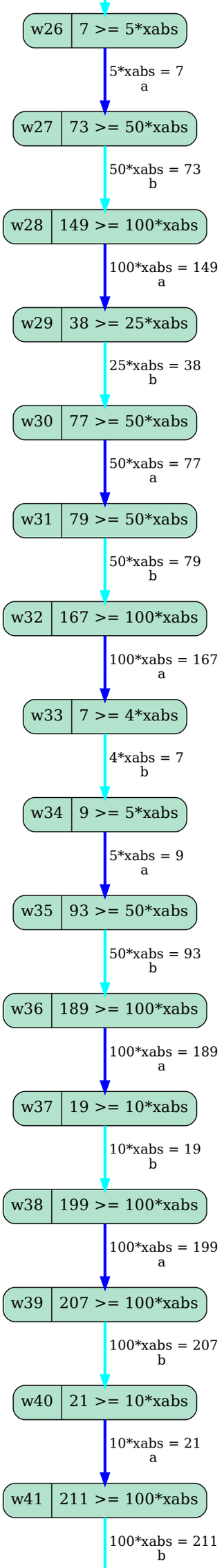
w26
7 >= 5*xabs
5*xabs = 7
a
w27
73 >= 50*xabs
50*xabs = 73
b
w28
149 >= 100*xabs
100*xabs = 149
a
w29
38 >= 25*xabs
25*xabs = 38
b
w30
77 >= 50*xabs
50*xabs = 77
a
w31
79 >= 50*xabs
50*xabs = 79
b
w32
167 >= 100*xabs
100*xabs = 167
a
w33
7 >= 4*xabs
4*xabs = 7
b
w34
9 >= 5*xabs
5*xabs = 9
a
w35
93 >= 50*xabs
50*xabs = 93
b
w36
189 >= 100*xabs
100*xabs = 189
a
w37
19 >= 10*xabs
10*xabs = 19
b
w38
199 >= 100*xabs
100*xabs = 199
a
w39
207 >= 100*xabs
100*xabs = 207
b
w40
21 >= 10*xabs
10*xabs = 21
a
w41
211 >= 100*xabs
100*xabs = 211
b

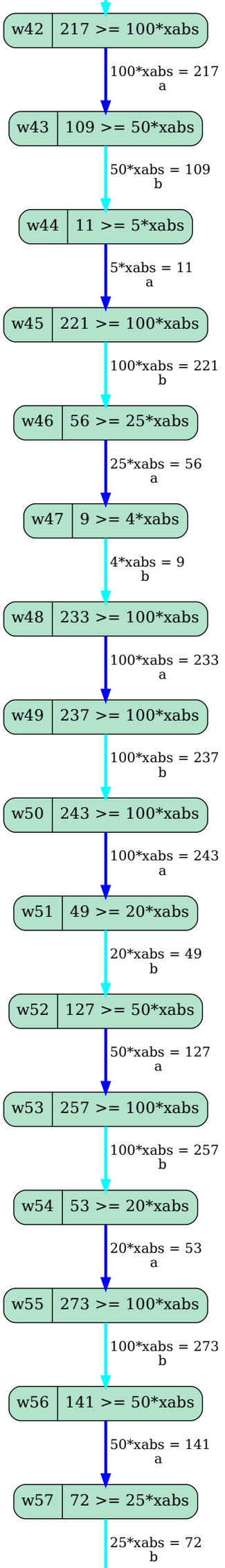
w42
217 >= 100*xabs
100*xabs = 217
a
w43
109 >= 50*xabs
50*xabs = 109
b
w44
11 >= 5*xabs
5*xabs = 11
a
w45
221 >= 100*xabs
100*xabs = 221
b
w46
56 >= 25*xabs
25*xabs = 56
a
w47
9 >= 4*xabs
4*xabs = 9
b
w48
233 >= 100*xabs
100*xabs = 233
a
w49
237 >= 100*xabs
100*xabs = 237
b
w50
243 >= 100*xabs
100*xabs = 243
a
w51
49 >= 20*xabs
20*xabs = 49
b
w52
127 >= 50*xabs
50*xabs = 127
a
w53
257 >= 100*xabs
100*xabs = 257
b
w54
53 >= 20*xabs
20*xabs = 53
a
w55
273 >= 100*xabs
100*xabs = 273
b
w56
141 >= 50*xabs
50*xabs = 141
a
w57
72 >= 25*xabs
25*xabs = 72
b

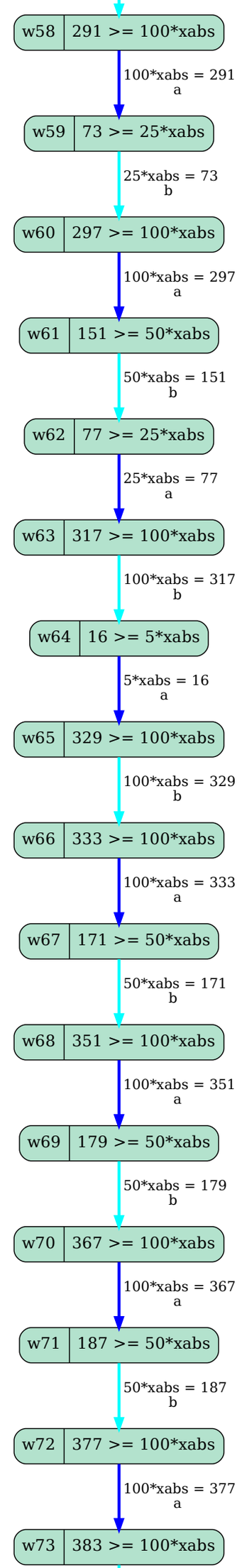
w58
291 >= 100*xabs
100*xabs = 291
a
w59
73 >= 25*xabs
25*xabs = 73
b
w60
297 >= 100*xabs
100*xabs = 297
a
w61
151 >= 50*xabs
50*xabs = 151
b
w62
77 >= 25*xabs
25*xabs = 77
a
w63
317 >= 100*xabs
100*xabs = 317
b
w64
16 >= 5*xabs
5*xabs = 16
a
w65
329 >= 100*xabs
100*xabs = 329
b
w66
333 >= 100*xabs
100*xabs = 333
a
w67
171 >= 50*xabs
50*xabs = 171
b
w68
351 >= 100*xabs
100*xabs = 351
a
w69
179 >= 50*xabs
50*xabs = 179
b
w70
367 >= 100*xabs
100*xabs = 367
a
w71
187 >= 50*xabs
50*xabs = 187
b
w72
377 >= 100*xabs
100*xabs = 377
a
w73
383 >= 100*xabs

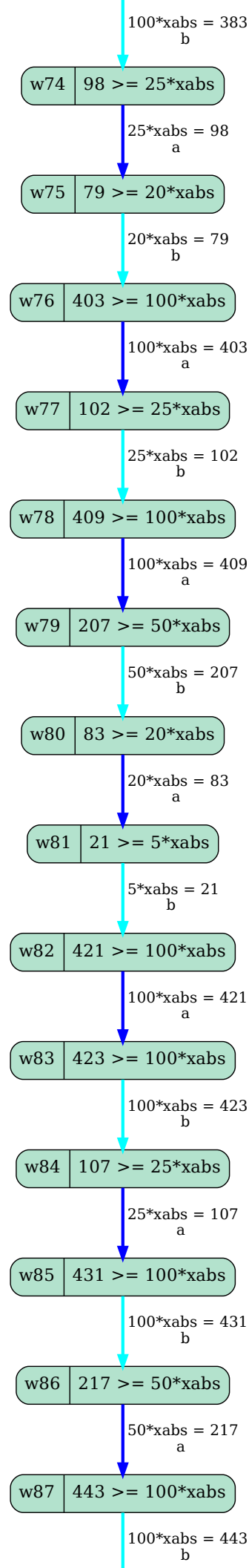
100*xabs = 383
b
w74
98 >= 25*xabs
25*xabs = 98
a
w75
79 >= 20*xabs
20*xabs = 79
b
w76
403 >= 100*xabs
100*xabs = 403
a
w77
102 >= 25*xabs
25*xabs = 102
b
w78
409 >= 100*xabs
100*xabs = 409
a
w79
207 >= 50*xabs
50*xabs = 207
b
w80
83 >= 20*xabs
20*xabs = 83
a
w81
21 >= 5*xabs
5*xabs = 21
b
w82
421 >= 100*xabs
100*xabs = 421
a
w83
423 >= 100*xabs
100*xabs = 423
b
w84
107 >= 25*xabs
25*xabs = 107
a
w85
431 >= 100*xabs
100*xabs = 431
b
w86
217 >= 50*xabs
50*xabs = 217
a
w87
443 >= 100*xabs
100*xabs = 443
b

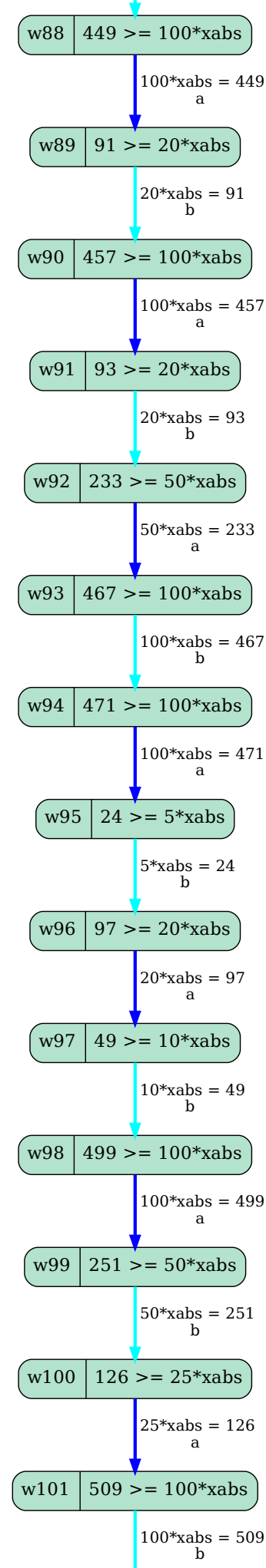
w88
449 >= 100*xabs
100*xabs = 449
a
w89
91 >= 20*xabs
20*xabs = 91
b
w90
457 >= 100*xabs
100*xabs = 457
a
w91
93 >= 20*xabs
20*xabs = 93
b
w92
233 >= 50*xabs
50*xabs = 233
a
w93
467 >= 100*xabs
100*xabs = 467
b
w94
471 >= 100*xabs
100*xabs = 471
a
w95
24 >= 5*xabs
5*xabs = 24
b
w96
97 >= 20*xabs
20*xabs = 97
a
w97
49 >= 10*xabs
10*xabs = 49
b
w98
499 >= 100*xabs
100*xabs = 499
a
w99
251 >= 50*xabs
50*xabs = 251
b
w100
126 >= 25*xabs
25*xabs = 126
a
w101
509 >= 100*xabs
100*xabs = 509
b

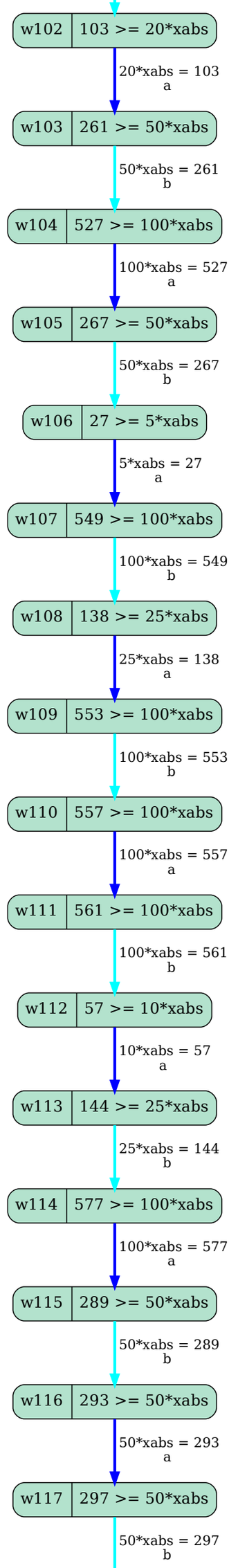
w102
103 >= 20*xabs
20*xabs = 103
a
w103
261 >= 50*xabs
50*xabs = 261
b
w104
527 >= 100*xabs
100*xabs = 527
a
w105
267 >= 50*xabs
50*xabs = 267
b
w106
27 >= 5*xabs
5*xabs = 27
a
w107
549 >= 100*xabs
100*xabs = 549
b
w108
138 >= 25*xabs
25*xabs = 138
a
w109
553 >= 100*xabs
100*xabs = 553
b
w110
557 >= 100*xabs
100*xabs = 557
a
w111
561 >= 100*xabs
100*xabs = 561
b
w112
57 >= 10*xabs
10*xabs = 57
a
w113
144 >= 25*xabs
25*xabs = 144
b
w114
577 >= 100*xabs
100*xabs = 577
a
w115
289 >= 50*xabs
50*xabs = 289
b
w116
293 >= 50*xabs
50*xabs = 293
a
w117
297 >= 50*xabs
50*xabs = 297
b

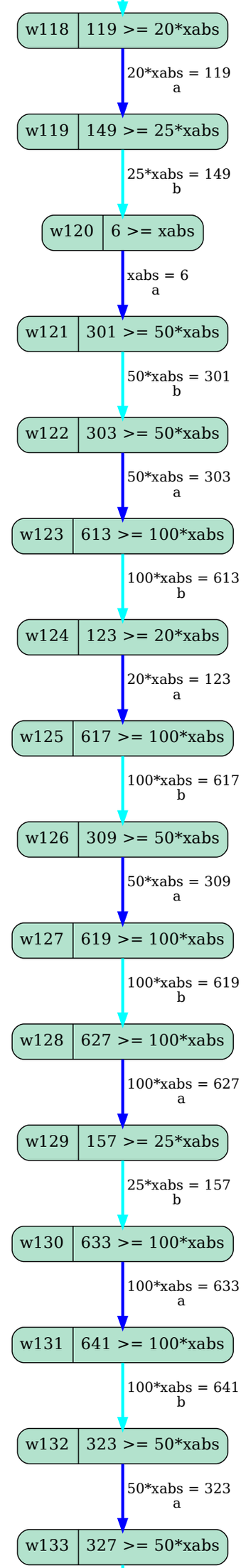
w118
119 >= 20*xabs
20*xabs = 119
a
w119
149 >= 25*xabs
25*xabs = 149
b
w120
6 >= xabs
xabs = 6
a
w121
301 >= 50*xabs
50*xabs = 301
b
w122
303 >= 50*xabs
50*xabs = 303
a
w123
613 >= 100*xabs
100*xabs = 613
b
w124
123 >= 20*xabs
20*xabs = 123
a
w125
617 >= 100*xabs
100*xabs = 617
b
w126
309 >= 50*xabs
50*xabs = 309
a
w127
619 >= 100*xabs
100*xabs = 619
b
w128
627 >= 100*xabs
100*xabs = 627
a
w129
157 >= 25*xabs
25*xabs = 157
b
w130
633 >= 100*xabs
100*xabs = 633
a
w131
641 >= 100*xabs
100*xabs = 641
b
w132
323 >= 50*xabs
50*xabs = 323
a
w133
327 >= 50*xabs

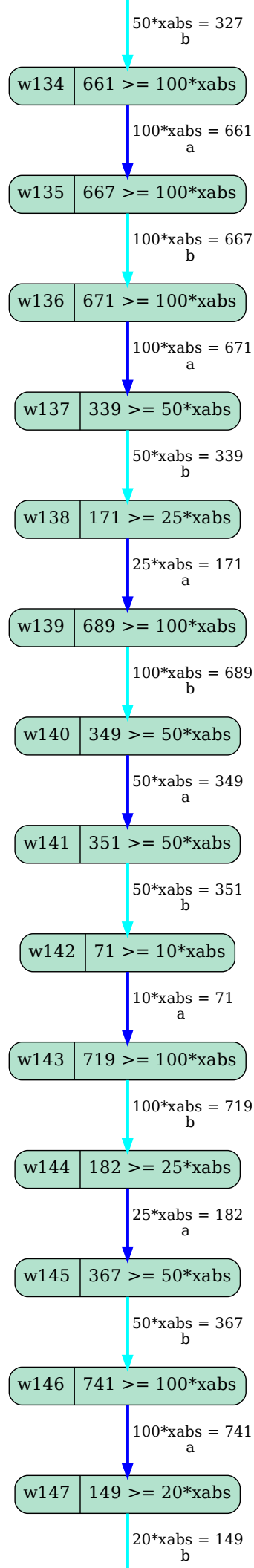
50*xabs = 327
b
w134
661 >= 100*xabs
100*xabs = 661
a
w135
667 >= 100*xabs
100*xabs = 667
b
w136
671 >= 100*xabs
100*xabs = 671
a
w137
339 >= 50*xabs
50*xabs = 339
b
w138
171 >= 25*xabs
25*xabs = 171
a
w139
689 >= 100*xabs
100*xabs = 689
b
w140
349 >= 50*xabs
50*xabs = 349
a
w141
351 >= 50*xabs
50*xabs = 351
b
w142
71 >= 10*xabs
10*xabs = 71
a
w143
719 >= 100*xabs
100*xabs = 719
b
w144
182 >= 25*xabs
25*xabs = 182
a
w145
367 >= 50*xabs
50*xabs = 367
b
w146
741 >= 100*xabs
100*xabs = 741
a
w147
149 >= 20*xabs
20*xabs = 149
b

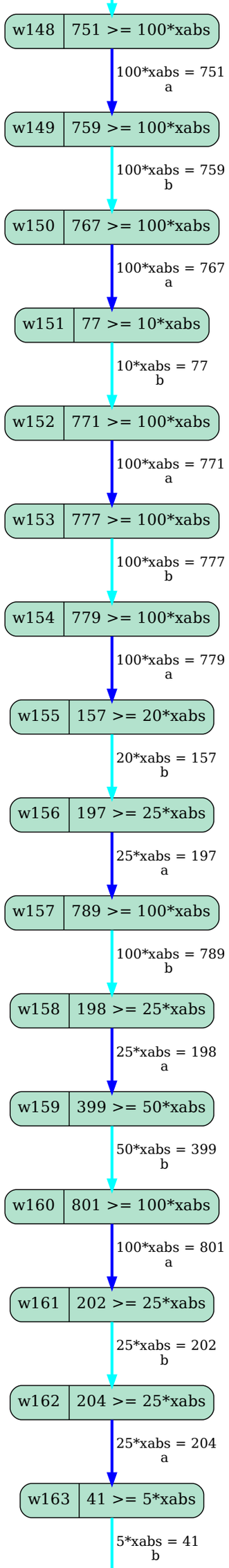
w148
751 >= 100*xabs
100*xabs = 751
a
w149
759 >= 100*xabs
100*xabs = 759
b
w150
767 >= 100*xabs
100*xabs = 767
a
w151
77 >= 10*xabs
10*xabs = 77
b
w152
771 >= 100*xabs
100*xabs = 771
a
w153
777 >= 100*xabs
100*xabs = 777
b
w154
779 >= 100*xabs
100*xabs = 779
a
w155
157 >= 20*xabs
20*xabs = 157
b
w156
197 >= 25*xabs
25*xabs = 197
a
w157
789 >= 100*xabs
100*xabs = 789
b
w158
198 >= 25*xabs
25*xabs = 198
a
w159
399 >= 50*xabs
50*xabs = 399
b
w160
801 >= 100*xabs
100*xabs = 801
a
w161
202 >= 25*xabs
25*xabs = 202
b
w162
204 >= 25*xabs
25*xabs = 204
a
w163
41 >= 5*xabs
5*xabs = 41
b

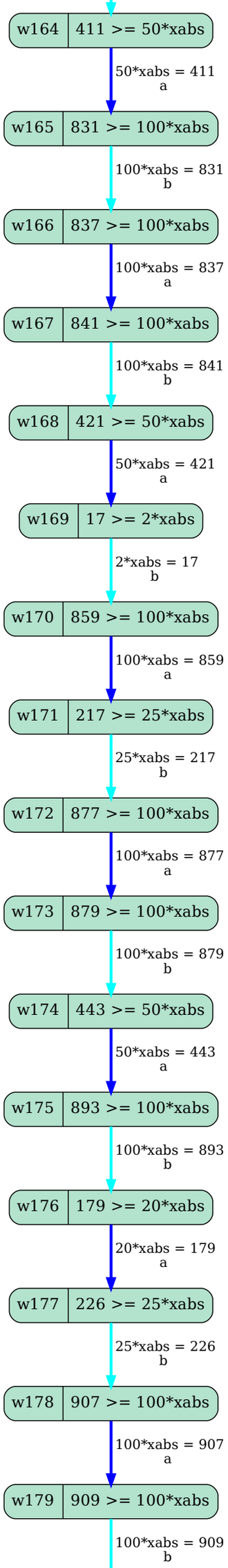
w164
411 >= 50*xabs
50*xabs = 411
a
w165
831 >= 100*xabs
100*xabs = 831
b
w166
837 >= 100*xabs
100*xabs = 837
a
w167
841 >= 100*xabs
100*xabs = 841
b
w168
421 >= 50*xabs
50*xabs = 421
a
w169
17 >= 2*xabs
2*xabs = 17
b
w170
859 >= 100*xabs
100*xabs = 859
a
w171
217 >= 25*xabs
25*xabs = 217
b
w172
877 >= 100*xabs
100*xabs = 877
a
w173
879 >= 100*xabs
100*xabs = 879
b
w174
443 >= 50*xabs
50*xabs = 443
a
w175
893 >= 100*xabs
100*xabs = 893
b
w176
179 >= 20*xabs
20*xabs = 179
a
w177
226 >= 25*xabs
25*xabs = 226
b
w178
907 >= 100*xabs
100*xabs = 907
a
w179
909 >= 100*xabs
100*xabs = 909
b

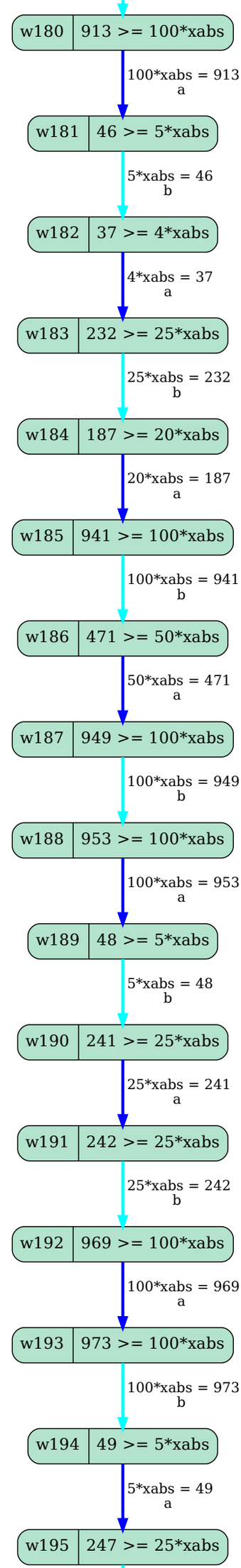
w180
913 >= 100*xabs
100*xabs = 913
a
w181
46 >= 5*xabs
5*xabs = 46
b
w182
37 >= 4*xabs
4*xabs = 37
a
w183
232 >= 25*xabs
25*xabs = 232
b
w184
187 >= 20*xabs
20*xabs = 187
a
w185
941 >= 100*xabs
100*xabs = 941
b
w186
471 >= 50*xabs
50*xabs = 471
a
w187
949 >= 100*xabs
100*xabs = 949
b
w188
953 >= 100*xabs
100*xabs = 953
a
w189
48 >= 5*xabs
5*xabs = 48
b
w190
241 >= 25*xabs
25*xabs = 241
a
w191
242 >= 25*xabs
25*xabs = 242
b
w192
969 >= 100*xabs
100*xabs = 969
a
w193
973 >= 100*xabs
100*xabs = 973
b
w194
49 >= 5*xabs
5*xabs = 49
a
w195
247 >= 25*xabs

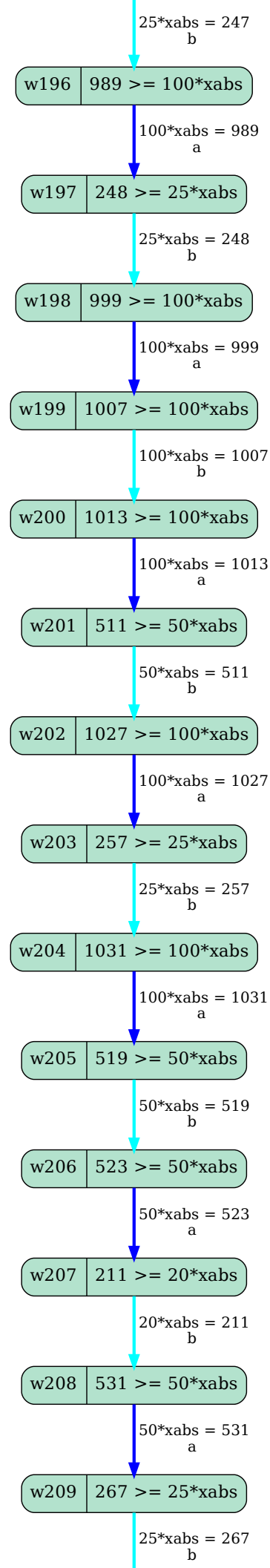
25*xabs = 247
b
w196
989 >= 100*xabs
100*xabs = 989
a
w197
248 >= 25*xabs
25*xabs = 248
b
w198
999 >= 100*xabs
100*xabs = 999
a
w199
1007 >= 100*xabs
100*xabs = 1007
b
w200
1013 >= 100*xabs
100*xabs = 1013
a
w201
511 >= 50*xabs
50*xabs = 511
b
w202
1027 >= 100*xabs
100*xabs = 1027
a
w203
257 >= 25*xabs
25*xabs = 257
b
w204
1031 >= 100*xabs
100*xabs = 1031
a
w205
519 >= 50*xabs
50*xabs = 519
b
w206
523 >= 50*xabs
50*xabs = 523
a
w207
211 >= 20*xabs
20*xabs = 211
b
w208
531 >= 50*xabs
50*xabs = 531
a
w209
267 >= 25*xabs
25*xabs = 267
b

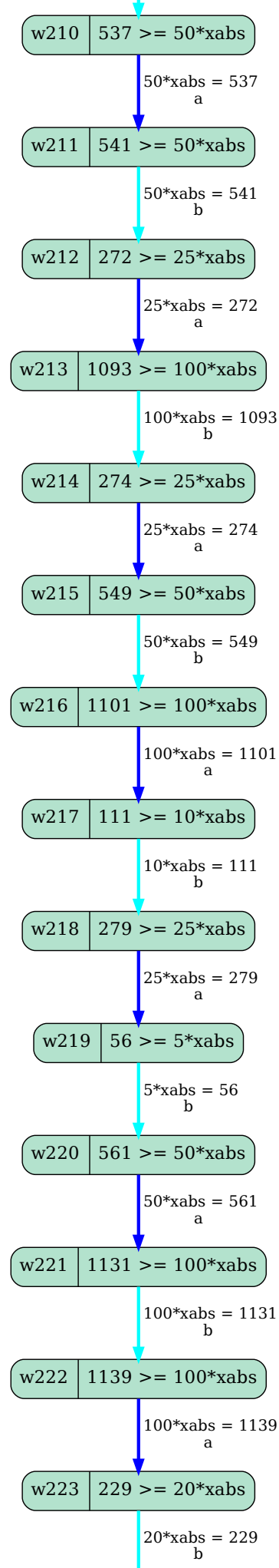
w210
537 >= 50*xabs
50*xabs = 537
a
w211
541 >= 50*xabs
50*xabs = 541
b
w212
272 >= 25*xabs
25*xabs = 272
a
w213
1093 >= 100*xabs
100*xabs = 1093
b
w214
274 >= 25*xabs
25*xabs = 274
a
w215
549 >= 50*xabs
50*xabs = 549
b
w216
1101 >= 100*xabs
100*xabs = 1101
a
w217
111 >= 10*xabs
10*xabs = 111
b
w218
279 >= 25*xabs
25*xabs = 279
a
w219
56 >= 5*xabs
5*xabs = 56
b
w220
561 >= 50*xabs
50*xabs = 561
a
w221
1131 >= 100*xabs
100*xabs = 1131
b
w222
1139 >= 100*xabs
100*xabs = 1139
a
w223
229 >= 20*xabs
20*xabs = 229
b

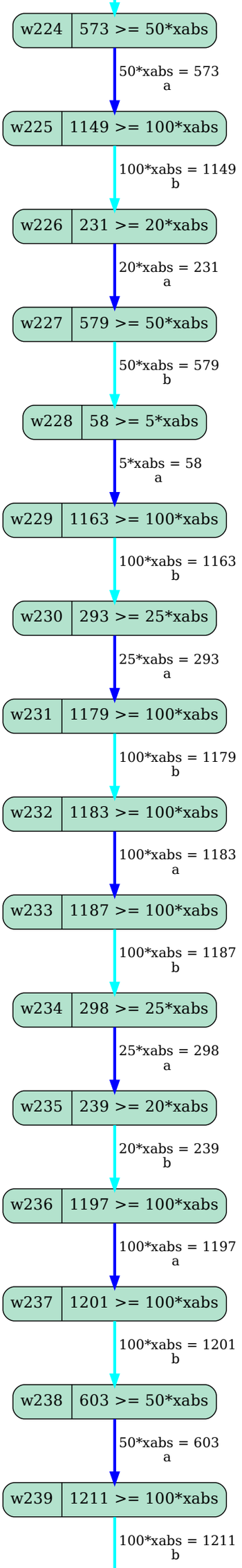
w224
573 >= 50*xabs
50*xabs = 573
a
w225
1149 >= 100*xabs
100*xabs = 1149
b
w226
231 >= 20*xabs
20*xabs = 231
a
w227
579 >= 50*xabs
50*xabs = 579
b
w228
58 >= 5*xabs
5*xabs = 58
a
w229
1163 >= 100*xabs
100*xabs = 1163
b
w230
293 >= 25*xabs
25*xabs = 293
a
w231
1179 >= 100*xabs
100*xabs = 1179
b
w232
1183 >= 100*xabs
100*xabs = 1183
a
w233
1187 >= 100*xabs
100*xabs = 1187
b
w234
298 >= 25*xabs
25*xabs = 298
a
w235
239 >= 20*xabs
20*xabs = 239
b
w236
1197 >= 100*xabs
100*xabs = 1197
a
w237
1201 >= 100*xabs
100*xabs = 1201
b
w238
603 >= 50*xabs
50*xabs = 603
a
w239
1211 >= 100*xabs
100*xabs = 1211
b

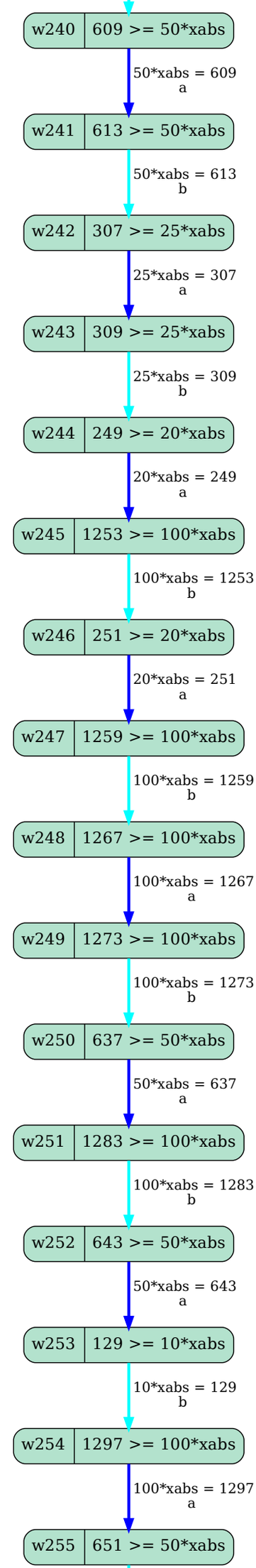
w240
609 >= 50*xabs
50*xabs = 609
a
w241
613 >= 50*xabs
50*xabs = 613
b
w242
307 >= 25*xabs
25*xabs = 307
a
w243
309 >= 25*xabs
25*xabs = 309
b
w244
249 >= 20*xabs
20*xabs = 249
a
w245
1253 >= 100*xabs
100*xabs = 1253
b
w246
251 >= 20*xabs
20*xabs = 251
a
w247
1259 >= 100*xabs
100*xabs = 1259
b
w248
1267 >= 100*xabs
100*xabs = 1267
a
w249
1273 >= 100*xabs
100*xabs = 1273
b
w250
637 >= 50*xabs
50*xabs = 637
a
w251
1283 >= 100*xabs
100*xabs = 1283
b
w252
643 >= 50*xabs
50*xabs = 643
a
w253
129 >= 10*xabs
10*xabs = 129
b
w254
1297 >= 100*xabs
100*xabs = 1297
a
w255
651 >= 50*xabs

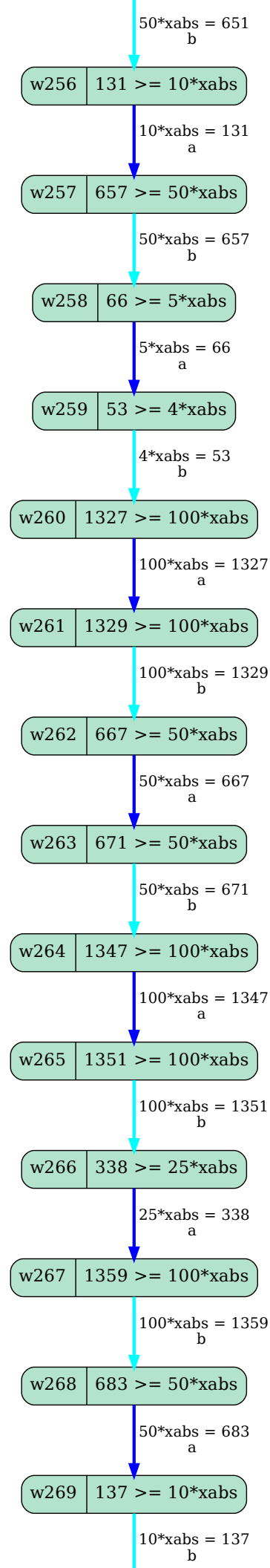
50*xabs = 651
b
w256
131 >= 10*xabs
10*xabs = 131
a
w257
657 >= 50*xabs
50*xabs = 657
b
w258
66 >= 5*xabs
5*xabs = 66
a
w259
53 >= 4*xabs
4*xabs = 53
b
w260
1327 >= 100*xabs
100*xabs = 1327
a
w261
1329 >= 100*xabs
100*xabs = 1329
b
w262
667 >= 50*xabs
50*xabs = 667
a
w263
671 >= 50*xabs
50*xabs = 671
b
w264
1347 >= 100*xabs
100*xabs = 1347
a
w265
1351 >= 100*xabs
100*xabs = 1351
b
w266
338 >= 25*xabs
25*xabs = 338
a
w267
1359 >= 100*xabs
100*xabs = 1359
b
w268
683 >= 50*xabs
50*xabs = 683
a
w269
137 >= 10*xabs
10*xabs = 137
b

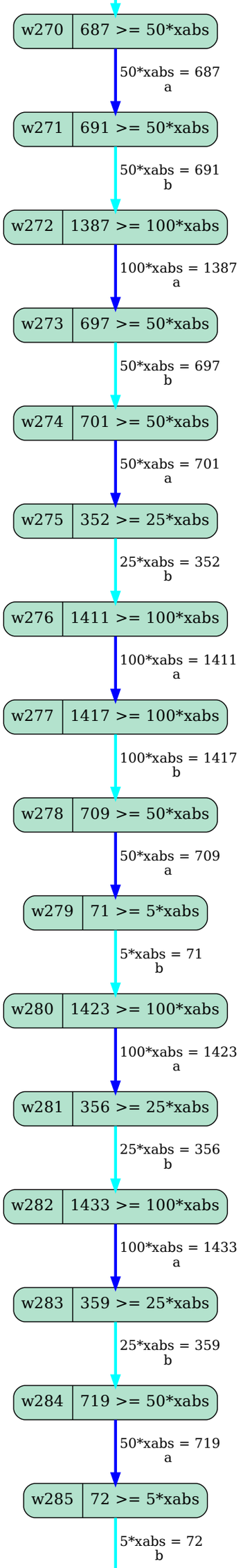
w270
687 >= 50*xabs
50*xabs = 687
a
w271
691 >= 50*xabs
50*xabs = 691
b
w272
1387 >= 100*xabs
100*xabs = 1387
a
w273
697 >= 50*xabs
50*xabs = 697
b
w274
701 >= 50*xabs
50*xabs = 701
a
w275
352 >= 25*xabs
25*xabs = 352
b
w276
1411 >= 100*xabs
100*xabs = 1411
a
w277
1417 >= 100*xabs
100*xabs = 1417
b
w278
709 >= 50*xabs
50*xabs = 709
a
w279
71 >= 5*xabs
5*xabs = 71
b
w280
1423 >= 100*xabs
100*xabs = 1423
a
w281
356 >= 25*xabs
25*xabs = 356
b
w282
1433 >= 100*xabs
100*xabs = 1433
a
w283
359 >= 25*xabs
25*xabs = 359
b
w284
719 >= 50*xabs
50*xabs = 719
a
w285
72 >= 5*xabs
5*xabs = 72
b

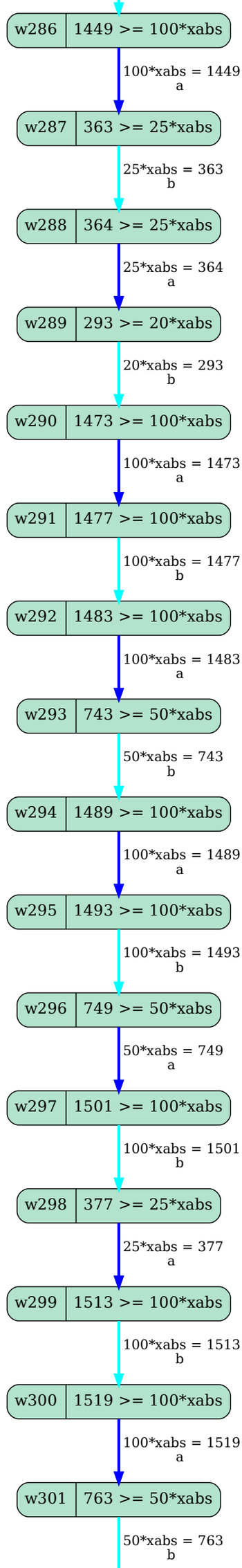
w286
1449 >= 100*xabs
100*xabs = 1449
a
w287
363 >= 25*xabs
25*xabs = 363
b
w288
364 >= 25*xabs
25*xabs = 364
a
w289
293 >= 20*xabs
20*xabs = 293
b
w290
1473 >= 100*xabs
100*xabs = 1473
a
w291
1477 >= 100*xabs
100*xabs = 1477
b
w292
1483 >= 100*xabs
100*xabs = 1483
a
w293
743 >= 50*xabs
50*xabs = 743
b
w294
1489 >= 100*xabs
100*xabs = 1489
a
w295
1493 >= 100*xabs
100*xabs = 1493
b
w296
749 >= 50*xabs
50*xabs = 749
a
w297
1501 >= 100*xabs
100*xabs = 1501
b
w298
377 >= 25*xabs
25*xabs = 377
a
w299
1513 >= 100*xabs
100*xabs = 1513
b
w300
1519 >= 100*xabs
100*xabs = 1519
a
w301
763 >= 50*xabs
50*xabs = 763
b

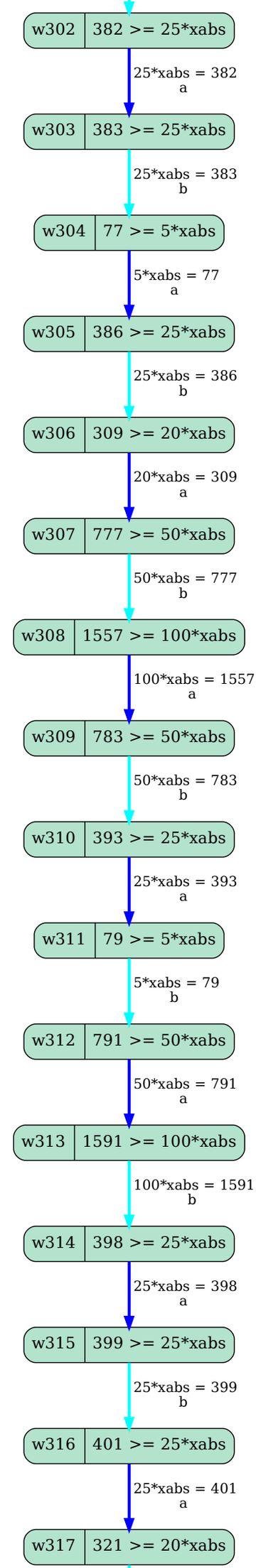
w302
382 >= 25*xabs
25*xabs = 382
a
w303
383 >= 25*xabs
25*xabs = 383
b
w304
77 >= 5*xabs
5*xabs = 77
a
w305
386 >= 25*xabs
25*xabs = 386
b
w306
309 >= 20*xabs
20*xabs = 309
a
w307
777 >= 50*xabs
50*xabs = 777
b
w308
1557 >= 100*xabs
100*xabs = 1557
a
w309
783 >= 50*xabs
50*xabs = 783
b
w310
393 >= 25*xabs
25*xabs = 393
a
w311
79 >= 5*xabs
5*xabs = 79
b
w312
791 >= 50*xabs
50*xabs = 791
a
w313
1591 >= 100*xabs
100*xabs = 1591
b
w314
398 >= 25*xabs
25*xabs = 398
a
w315
399 >= 25*xabs
25*xabs = 399
b
w316
401 >= 25*xabs
25*xabs = 401
a
w317
321 >= 20*xabs

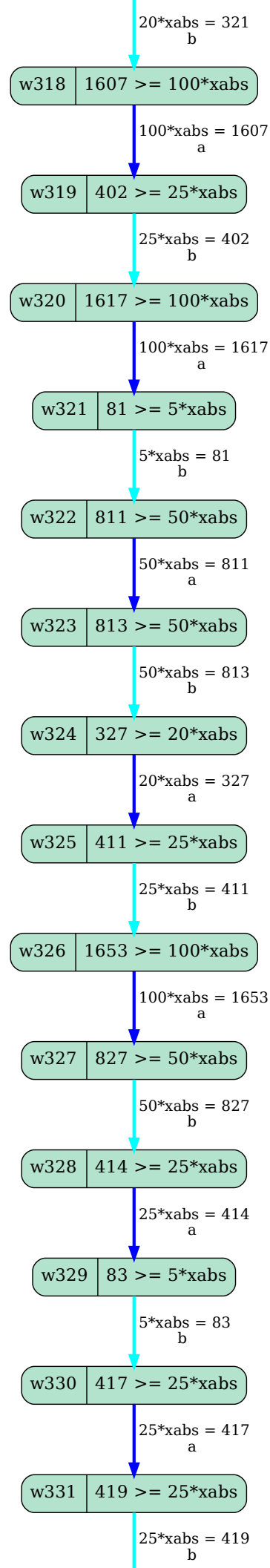
20*xabs = 321
b
w318
1607 >= 100*xabs
100*xabs = 1607
a
w319
402 >= 25*xabs
25*xabs = 402
b
w320
1617 >= 100*xabs
100*xabs = 1617
a
w321
81 >= 5*xabs
5*xabs = 81
b
w322
811 >= 50*xabs
50*xabs = 811
a
w323
813 >= 50*xabs
50*xabs = 813
b
w324
327 >= 20*xabs
20*xabs = 327
a
w325
411 >= 25*xabs
25*xabs = 411
b
w326
1653 >= 100*xabs
100*xabs = 1653
a
w327
827 >= 50*xabs
50*xabs = 827
b
w328
414 >= 25*xabs
25*xabs = 414
a
w329
83 >= 5*xabs
5*xabs = 83
b
w330
417 >= 25*xabs
25*xabs = 417
a
w331
419 >= 25*xabs
25*xabs = 419
b

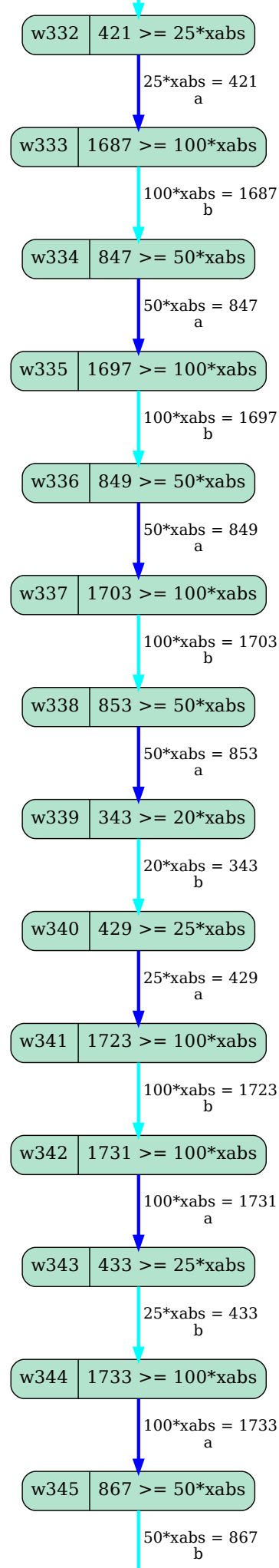
w332
421 >= 25*xabs
25*xabs = 421
a
w333
1687 >= 100*xabs
100*xabs = 1687
b
w334
847 >= 50*xabs
50*xabs = 847
a
w335
1697 >= 100*xabs
100*xabs = 1697
b
w336
849 >= 50*xabs
50*xabs = 849
a
w337
1703 >= 100*xabs
100*xabs = 1703
b
w338
853 >= 50*xabs
50*xabs = 853
a
w339
343 >= 20*xabs
20*xabs = 343
b
w340
429 >= 25*xabs
25*xabs = 429
a
w341
1723 >= 100*xabs
100*xabs = 1723
b
w342
1731 >= 100*xabs
100*xabs = 1731
a
w343
433 >= 25*xabs
25*xabs = 433
b
w344
1733 >= 100*xabs
100*xabs = 1733
a
w345
867 >= 50*xabs
50*xabs = 867
b

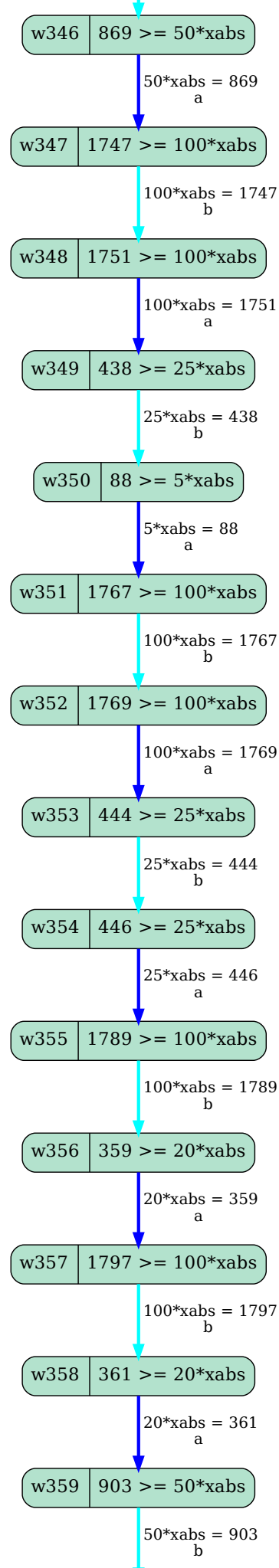
w346
869 >= 50*xabs
50*xabs = 869
a
w347
1747 >= 100*xabs
100*xabs = 1747
b
w348
1751 >= 100*xabs
100*xabs = 1751
a
w349
438 >= 25*xabs
25*xabs = 438
b
w350
88 >= 5*xabs
5*xabs = 88
a
w351
1767 >= 100*xabs
100*xabs = 1767
b
w352
1769 >= 100*xabs
100*xabs = 1769
a
w353
444 >= 25*xabs
25*xabs = 444
b
w354
446 >= 25*xabs
25*xabs = 446
a
w355
1789 >= 100*xabs
100*xabs = 1789
b
w356
359 >= 20*xabs
20*xabs = 359
a
w357
1797 >= 100*xabs
100*xabs = 1797
b
w358
361 >= 20*xabs
20*xabs = 361
a
w359
903 >= 50*xabs
50*xabs = 903
b

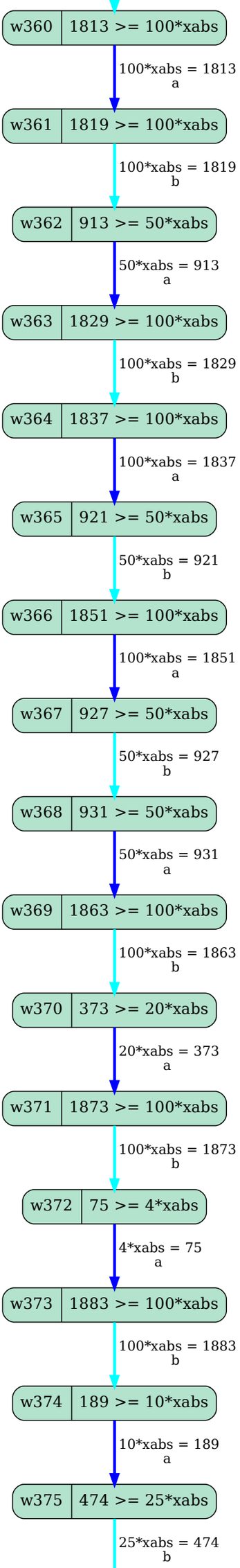
w360
1813 >= 100*xabs
100*xabs = 1813
a
w361
1819 >= 100*xabs
100*xabs = 1819
b
w362
913 >= 50*xabs
50*xabs = 913
a
w363
1829 >= 100*xabs
100*xabs = 1829
b
w364
1837 >= 100*xabs
100*xabs = 1837
a
w365
921 >= 50*xabs
50*xabs = 921
b
w366
1851 >= 100*xabs
100*xabs = 1851
a
w367
927 >= 50*xabs
50*xabs = 927
b
w368
931 >= 50*xabs
50*xabs = 931
a
w369
1863 >= 100*xabs
100*xabs = 1863
b
w370
373 >= 20*xabs
20*xabs = 373
a
w371
1873 >= 100*xabs
100*xabs = 1873
b
w372
75 >= 4*xabs
4*xabs = 75
a
w373
1883 >= 100*xabs
100*xabs = 1883
b
w374
189 >= 10*xabs
10*xabs = 189
a
w375
474 >= 25*xabs
25*xabs = 474
b

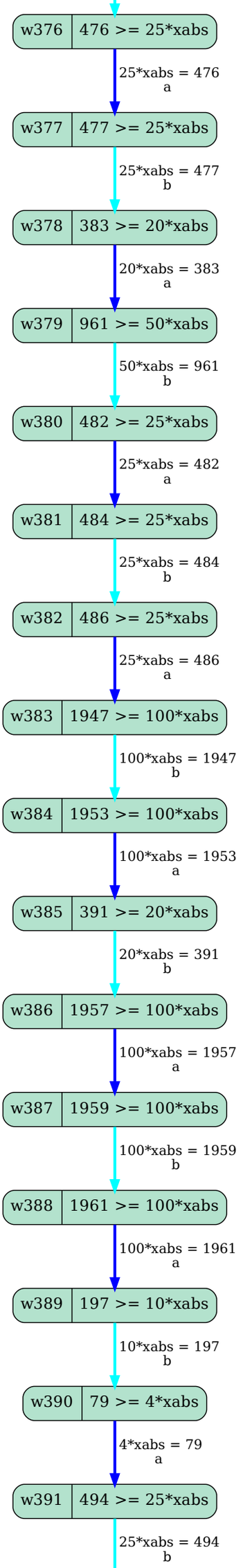
w376
476 >= 25*xabs
25*xabs = 476
a
w377
477 >= 25*xabs
25*xabs = 477
b
w378
383 >= 20*xabs
20*xabs = 383
a
w379
961 >= 50*xabs
50*xabs = 961
b
w380
482 >= 25*xabs
25*xabs = 482
a
w381
484 >= 25*xabs
25*xabs = 484
b
w382
486 >= 25*xabs
25*xabs = 486
a
w383
1947 >= 100*xabs
100*xabs = 1947
b
w384
1953 >= 100*xabs
100*xabs = 1953
a
w385
391 >= 20*xabs
20*xabs = 391
b
w386
1957 >= 100*xabs
100*xabs = 1957
a
w387
1959 >= 100*xabs
100*xabs = 1959
b
w388
1961 >= 100*xabs
100*xabs = 1961
a
w389
197 >= 10*xabs
10*xabs = 197
b
w390
79 >= 4*xabs
4*xabs = 79
a
w391
494 >= 25*xabs
25*xabs = 494
b

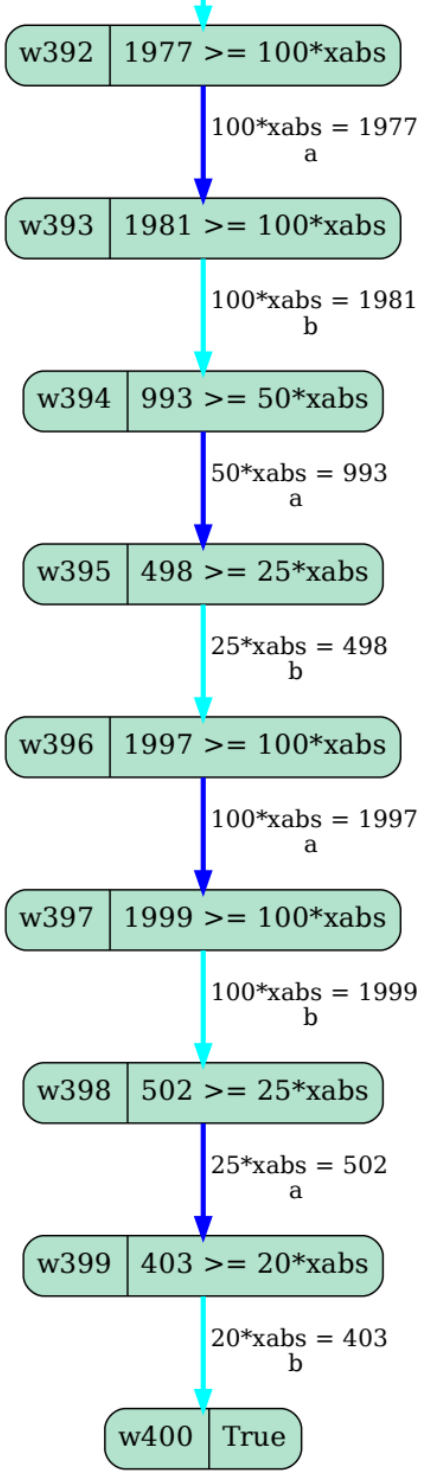
w392
1977 >= 100*xabs
100*xabs = 1977
a
w393
1981 >= 100*xabs
100*xabs = 1981
b
w394
993 >= 50*xabs
50*xabs = 993
a
w395
498 >= 25*xabs
25*xabs = 498
b
w396
1997 >= 100*xabs
100*xabs = 1997
a
w397
1999 >= 100*xabs
100*xabs = 1999
b
w398
502 >= 25*xabs
25*xabs = 502
a
w399
403 >= 20*xabs
20*xabs = 403
b
w400
True