gear-8000.imi

Generated by IMITATOR 3.1 "Cheese Artichoke"
Build: HEAD/ec224ec
Generation time: Fri Jul 23, 2021 10:21:11

2 clocks	3 parameters	Initial
x xabs	p1 t tprime	p1 >= 0 & t >= 0 & tprime >= 0 & x = 0 & xabs = 0

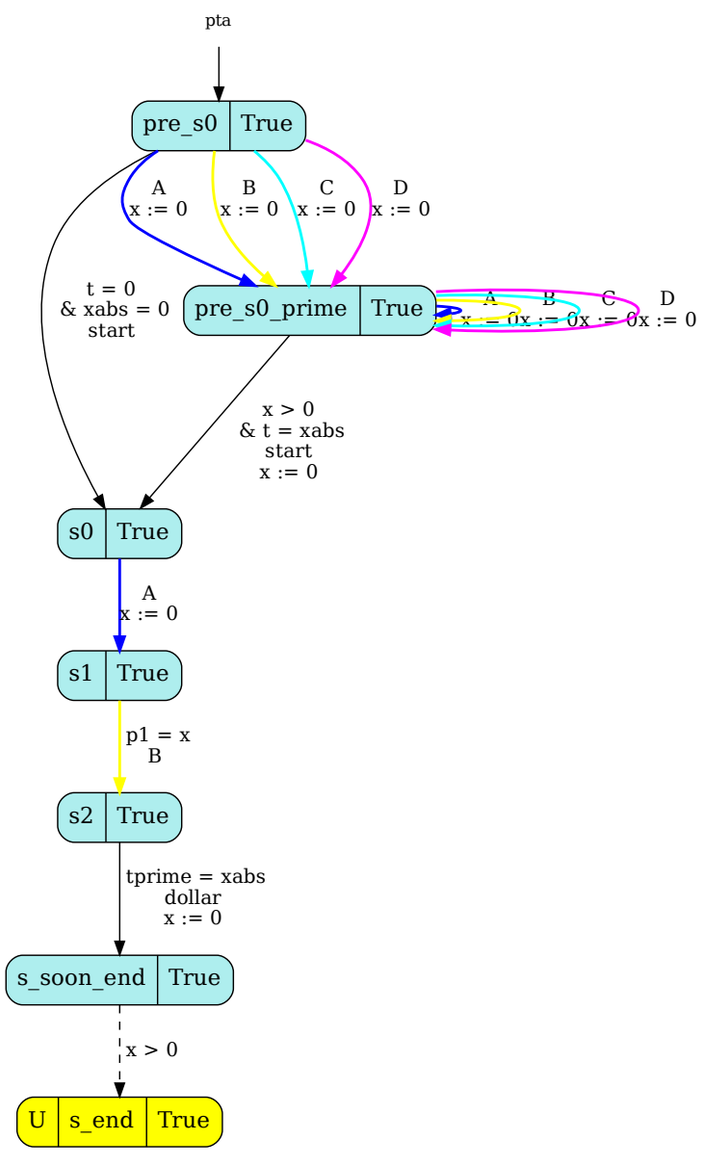

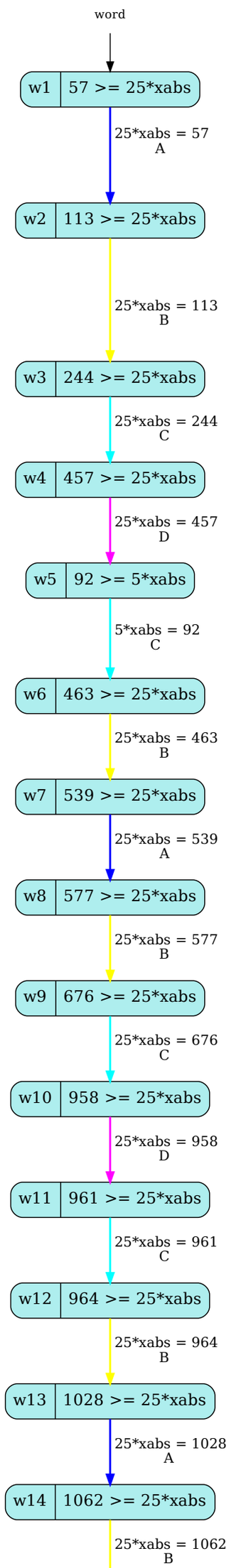

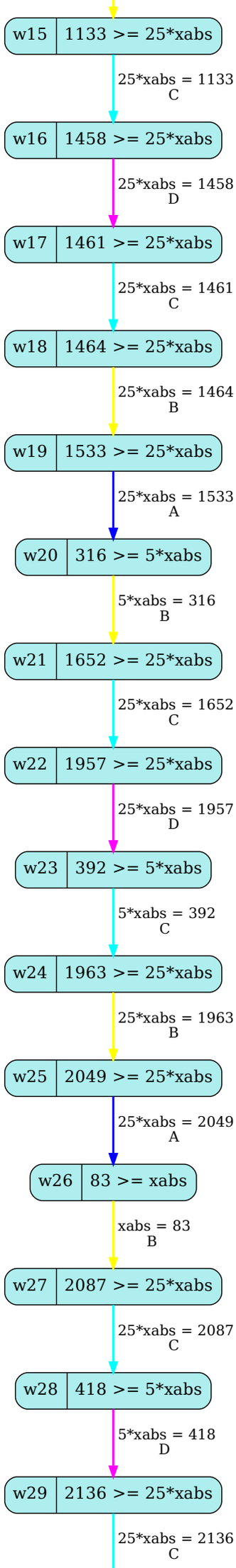
w15
1133 >= 25*xabs
25*xabs = 1133
C
w16
1458 >= 25*xabs
25*xabs = 1458
D
w17
1461 >= 25*xabs
25*xabs = 1461
C
w18
1464 >= 25*xabs
25*xabs = 1464
B
w19
1533 >= 25*xabs
25*xabs = 1533
A
w20
316 >= 5*xabs
5*xabs = 316
B
w21
1652 >= 25*xabs
25*xabs = 1652
C
w22
1957 >= 25*xabs
25*xabs = 1957
D
w23
392 >= 5*xabs
5*xabs = 392
C
w24
1963 >= 25*xabs
25*xabs = 1963
B
w25
2049 >= 25*xabs
25*xabs = 2049
A
w26
83 >= xabs
xabs = 83
B
w27
2087 >= 25*xabs
25*xabs = 2087
C
w28
418 >= 5*xabs
5*xabs = 418
D
w29
2136 >= 25*xabs
25*xabs = 2136
C

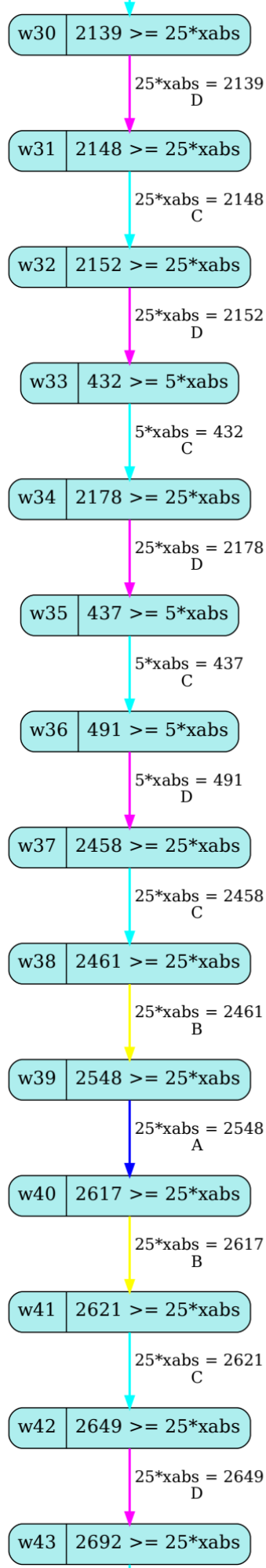
w30
2139 >= 25*xabs
25*xabs = 2139
D
w31
2148 >= 25*xabs
25*xabs = 2148
C
w32
2152 >= 25*xabs
25*xabs = 2152
D
w33
432 >= 5*xabs
5*xabs = 432
C
w34
2178 >= 25*xabs
25*xabs = 2178
D
w35
437 >= 5*xabs
5*xabs = 437
C
w36
491 >= 5*xabs
5*xabs = 491
D
w37
2458 >= 25*xabs
25*xabs = 2458
C
w38
2461 >= 25*xabs
25*xabs = 2461
B
w39
2548 >= 25*xabs
25*xabs = 2548
A
w40
2617 >= 25*xabs
25*xabs = 2617
B
w41
2621 >= 25*xabs
25*xabs = 2621
C
w42
2649 >= 25*xabs
25*xabs = 2649
D
w43
2692 >= 25*xabs

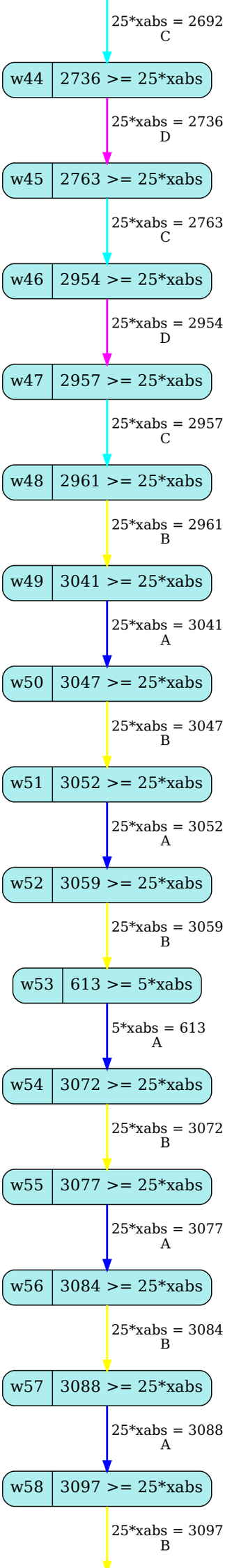
25*xabs = 2692
C
w44
2736 >= 25*xabs
25*xabs = 2736
D
w45
2763 >= 25*xabs
25*xabs = 2763
C
w46
2954 >= 25*xabs
25*xabs = 2954
D
w47
2957 >= 25*xabs
25*xabs = 2957
C
w48
2961 >= 25*xabs
25*xabs = 2961
B
w49
3041 >= 25*xabs
25*xabs = 3041
A
w50
3047 >= 25*xabs
25*xabs = 3047
B
w51
3052 >= 25*xabs
25*xabs = 3052
A
w52
3059 >= 25*xabs
25*xabs = 3059
B
w53
613 >= 5*xabs
5*xabs = 613
A
w54
3072 >= 25*xabs
25*xabs = 3072
B
w55
3077 >= 25*xabs
25*xabs = 3077
A
w56
3084 >= 25*xabs
25*xabs = 3084
B
w57
3088 >= 25*xabs
25*xabs = 3088
A
w58
3097 >= 25*xabs
25*xabs = 3097
B

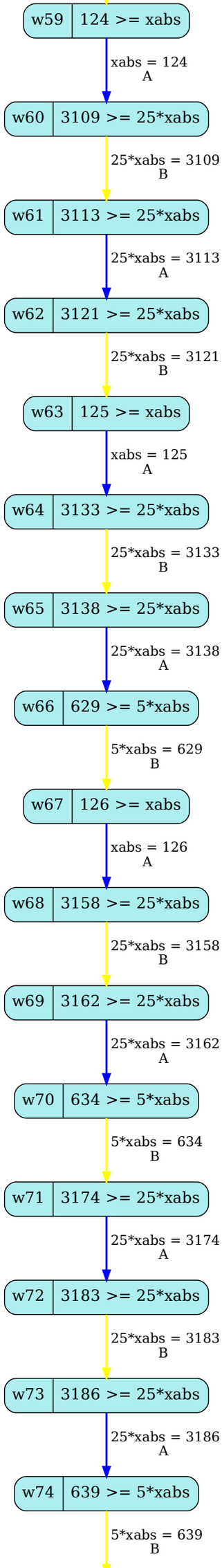
w59
124 >= xabs
xabs = 124
A
w60
3109 >= 25*xabs
25*xabs = 3109
B
w61
3113 >= 25*xabs
25*xabs = 3113
A
w62
3121 >= 25*xabs
25*xabs = 3121
B
w63
125 >= xabs
xabs = 125
A
w64
3133 >= 25*xabs
25*xabs = 3133
B
w65
3138 >= 25*xabs
25*xabs = 3138
A
w66
629 >= 5*xabs
5*xabs = 629
B
w67
126 >= xabs
xabs = 126
A
w68
3158 >= 25*xabs
25*xabs = 3158
B
w69
3162 >= 25*xabs
25*xabs = 3162
A
w70
634 >= 5*xabs
5*xabs = 634
B
w71
3174 >= 25*xabs
25*xabs = 3174
A
w72
3183 >= 25*xabs
25*xabs = 3183
B
w73
3186 >= 25*xabs
25*xabs = 3186
A
w74
639 >= 5*xabs
5*xabs = 639
B

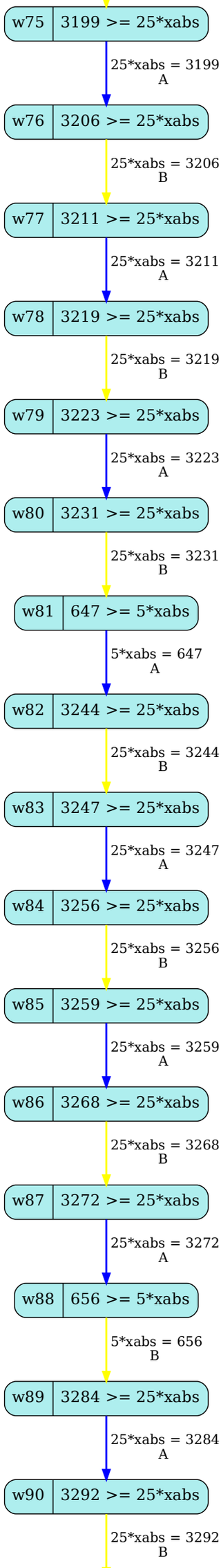
w75
3199 >= 25*xabs
25*xabs = 3199
A
w76
3206 >= 25*xabs
25*xabs = 3206
B
w77
3211 >= 25*xabs
25*xabs = 3211
A
w78
3219 >= 25*xabs
25*xabs = 3219
B
w79
3223 >= 25*xabs
25*xabs = 3223
A
w80
3231 >= 25*xabs
25*xabs = 3231
B
w81
647 >= 5*xabs
5*xabs = 647
A
w82
3244 >= 25*xabs
25*xabs = 3244
B
w83
3247 >= 25*xabs
25*xabs = 3247
A
w84
3256 >= 25*xabs
25*xabs = 3256
B
w85
3259 >= 25*xabs
25*xabs = 3259
A
w86
3268 >= 25*xabs
25*xabs = 3268
B
w87
3272 >= 25*xabs
25*xabs = 3272
A
w88
656 >= 5*xabs
5*xabs = 656
B
w89
3284 >= 25*xabs
25*xabs = 3284
A
w90
3292 >= 25*xabs
25*xabs = 3292
B

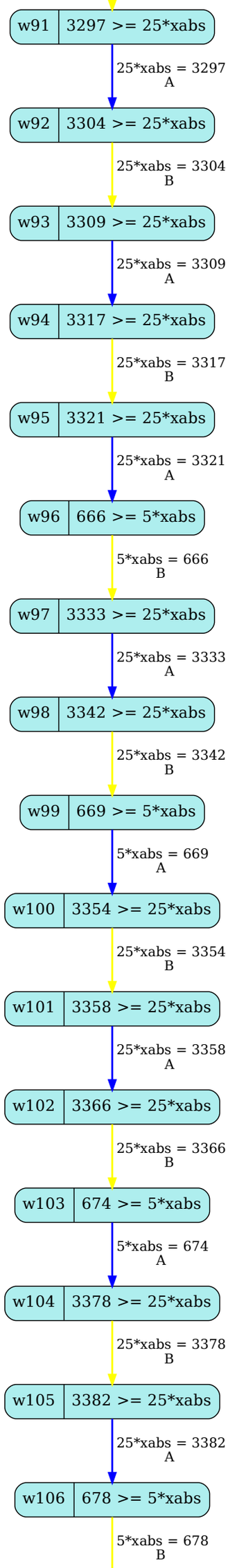
w91
3297 >= 25*xabs
25*xabs = 3297
A
w92
3304 >= 25*xabs
25*xabs = 3304
B
w93
3309 >= 25*xabs
25*xabs = 3309
A
w94
3317 >= 25*xabs
25*xabs = 3317
B
w95
3321 >= 25*xabs
25*xabs = 3321
A
w96
666 >= 5*xabs
5*xabs = 666
B
w97
3333 >= 25*xabs
25*xabs = 3333
A
w98
3342 >= 25*xabs
25*xabs = 3342
B
w99
669 >= 5*xabs
5*xabs = 669
A
w100
3354 >= 25*xabs
25*xabs = 3354
B
w101
3358 >= 25*xabs
25*xabs = 3358
A
w102
3366 >= 25*xabs
25*xabs = 3366
B
w103
674 >= 5*xabs
5*xabs = 674
A
w104
3378 >= 25*xabs
25*xabs = 3378
B
w105
3382 >= 25*xabs
25*xabs = 3382
A
w106
678 >= 5*xabs
5*xabs = 678
B

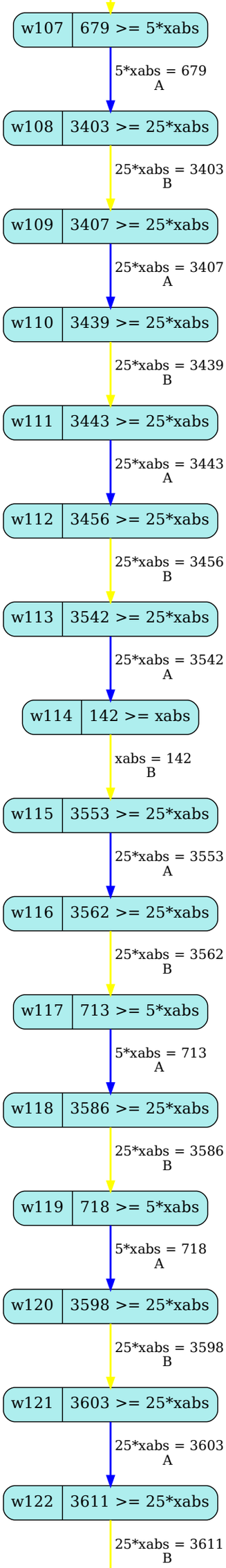
w107
679 >= 5*xabs
5*xabs = 679
A
w108
3403 >= 25*xabs
25*xabs = 3403
B
w109
3407 >= 25*xabs
25*xabs = 3407
A
w110
3439 >= 25*xabs
25*xabs = 3439
B
w111
3443 >= 25*xabs
25*xabs = 3443
A
w112
3456 >= 25*xabs
25*xabs = 3456
B
w113
3542 >= 25*xabs
25*xabs = 3542
A
w114
142 >= xabs
xabs = 142
B
w115
3553 >= 25*xabs
25*xabs = 3553
A
w116
3562 >= 25*xabs
25*xabs = 3562
B
w117
713 >= 5*xabs
5*xabs = 713
A
w118
3586 >= 25*xabs
25*xabs = 3586
B
w119
718 >= 5*xabs
5*xabs = 718
A
w120
3598 >= 25*xabs
25*xabs = 3598
B
w121
3603 >= 25*xabs
25*xabs = 3603
A
w122
3611 >= 25*xabs
25*xabs = 3611
B

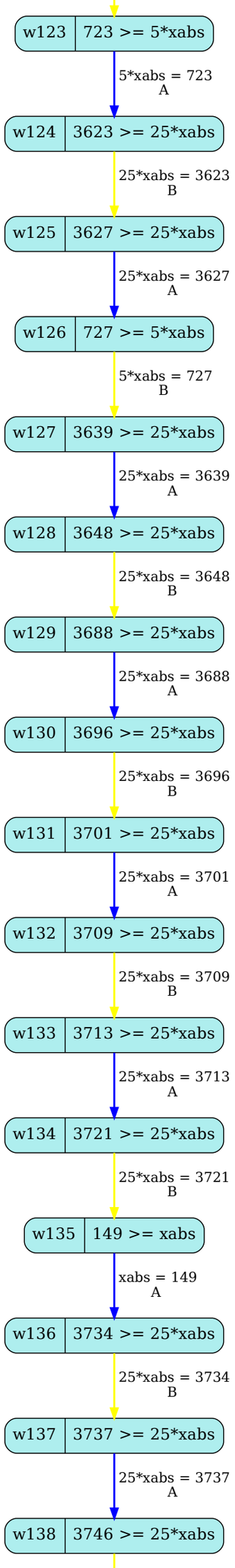
w123
723 >= 5*xabs
5*xabs = 723
A
w124
3623 >= 25*xabs
25*xabs = 3623
B
w125
3627 >= 25*xabs
25*xabs = 3627
A
w126
727 >= 5*xabs
5*xabs = 727
B
w127
3639 >= 25*xabs
25*xabs = 3639
A
w128
3648 >= 25*xabs
25*xabs = 3648
B
w129
3688 >= 25*xabs
25*xabs = 3688
A
w130
3696 >= 25*xabs
25*xabs = 3696
B
w131
3701 >= 25*xabs
25*xabs = 3701
A
w132
3709 >= 25*xabs
25*xabs = 3709
B
w133
3713 >= 25*xabs
25*xabs = 3713
A
w134
3721 >= 25*xabs
25*xabs = 3721
B
w135
149 >= xabs
xabs = 149
A
w136
3734 >= 25*xabs
25*xabs = 3734
B
w137
3737 >= 25*xabs
25*xabs = 3737
A
w138
3746 >= 25*xabs

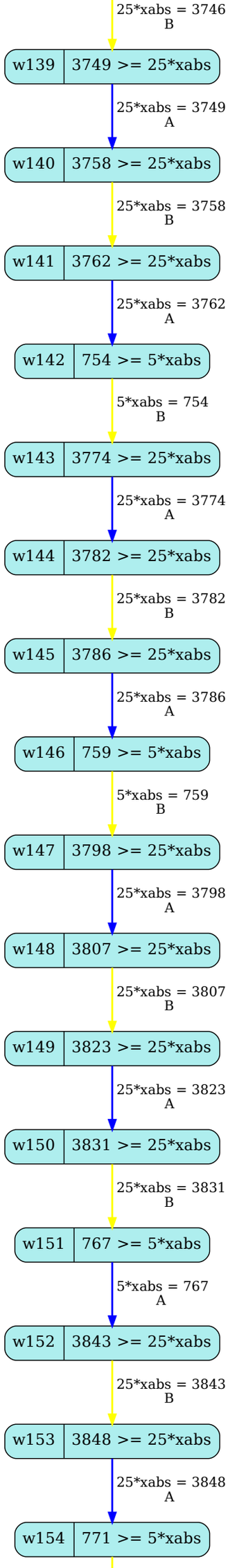
25*xabs = 3746
B
w139
3749 >= 25*xabs
25*xabs = 3749
A
w140
3758 >= 25*xabs
25*xabs = 3758
B
w141
3762 >= 25*xabs
25*xabs = 3762
A
w142
754 >= 5*xabs
5*xabs = 754
B
w143
3774 >= 25*xabs
25*xabs = 3774
A
w144
3782 >= 25*xabs
25*xabs = 3782
B
w145
3786 >= 25*xabs
25*xabs = 3786
A
w146
759 >= 5*xabs
5*xabs = 759
B
w147
3798 >= 25*xabs
25*xabs = 3798
A
w148
3807 >= 25*xabs
25*xabs = 3807
B
w149
3823 >= 25*xabs
25*xabs = 3823
A
w150
3831 >= 25*xabs
25*xabs = 3831
B
w151
767 >= 5*xabs
5*xabs = 767
A
w152
3843 >= 25*xabs
25*xabs = 3843
B
w153
3848 >= 25*xabs
25*xabs = 3848
A
w154
771 >= 5*xabs

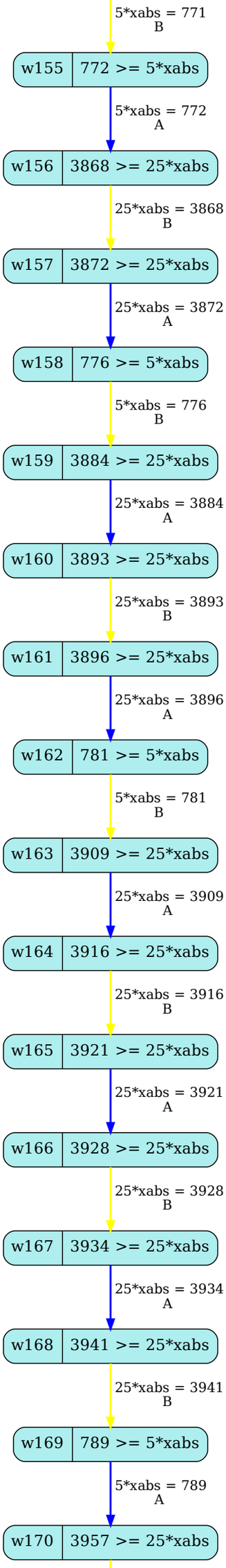
5*xabs = 771
B
w155
772 >= 5*xabs
5*xabs = 772
A
w156
3868 >= 25*xabs
25*xabs = 3868
B
w157
3872 >= 25*xabs
25*xabs = 3872
A
w158
776 >= 5*xabs
5*xabs = 776
B
w159
3884 >= 25*xabs
25*xabs = 3884
A
w160
3893 >= 25*xabs
25*xabs = 3893
B
w161
3896 >= 25*xabs
25*xabs = 3896
A
w162
781 >= 5*xabs
5*xabs = 781
B
w163
3909 >= 25*xabs
25*xabs = 3909
A
w164
3916 >= 25*xabs
25*xabs = 3916
B
w165
3921 >= 25*xabs
25*xabs = 3921
A
w166
3928 >= 25*xabs
25*xabs = 3928
B
w167
3934 >= 25*xabs
25*xabs = 3934
A
w168
3941 >= 25*xabs
25*xabs = 3941
B
w169
789 >= 5*xabs
5*xabs = 789
A
w170
3957 >= 25*xabs

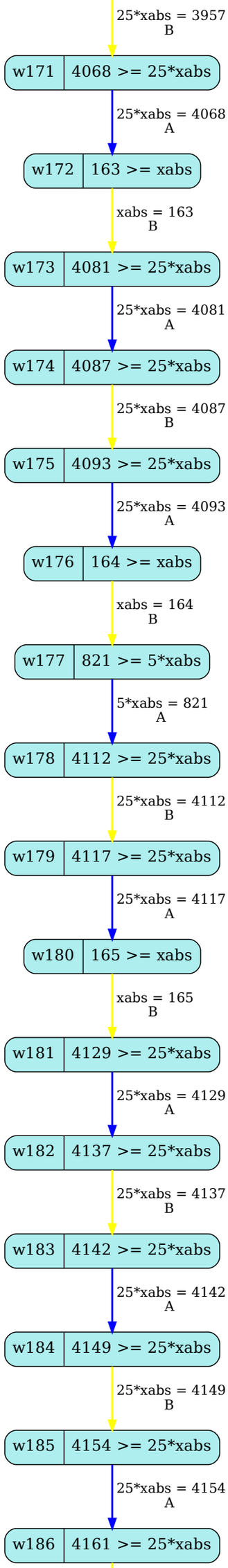
25*xabs = 3957
B
w171
4068 >= 25*xabs
25*xabs = 4068
A
w172
163 >= xabs
xabs = 163
B
w173
4081 >= 25*xabs
25*xabs = 4081
A
w174
4087 >= 25*xabs
25*xabs = 4087
B
w175
4093 >= 25*xabs
25*xabs = 4093
A
w176
164 >= xabs
xabs = 164
B
w177
821 >= 5*xabs
5*xabs = 821
A
w178
4112 >= 25*xabs
25*xabs = 4112
B
w179
4117 >= 25*xabs
25*xabs = 4117
A
w180
165 >= xabs
xabs = 165
B
w181
4129 >= 25*xabs
25*xabs = 4129
A
w182
4137 >= 25*xabs
25*xabs = 4137
B
w183
4142 >= 25*xabs
25*xabs = 4142
A
w184
4149 >= 25*xabs
25*xabs = 4149
B
w185
4154 >= 25*xabs
25*xabs = 4154
A
w186
4161 >= 25*xabs

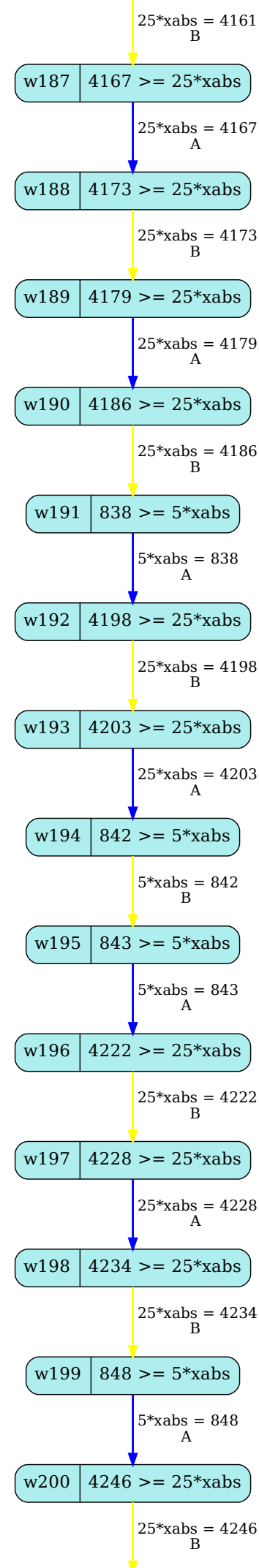
25*xabs = 4161
B
w187
4167 >= 25*xabs
25*xabs = 4167
A
w188
4173 >= 25*xabs
25*xabs = 4173
B
w189
4179 >= 25*xabs
25*xabs = 4179
A
w190
4186 >= 25*xabs
25*xabs = 4186
B
w191
838 >= 5*xabs
5*xabs = 838
A
w192
4198 >= 25*xabs
25*xabs = 4198
B
w193
4203 >= 25*xabs
25*xabs = 4203
A
w194
842 >= 5*xabs
5*xabs = 842
B
w195
843 >= 5*xabs
5*xabs = 843
A
w196
4222 >= 25*xabs
25*xabs = 4222
B
w197
4228 >= 25*xabs
25*xabs = 4228
A
w198
4234 >= 25*xabs
25*xabs = 4234
B
w199
848 >= 5*xabs
5*xabs = 848
A
w200
4246 >= 25*xabs
25*xabs = 4246
B

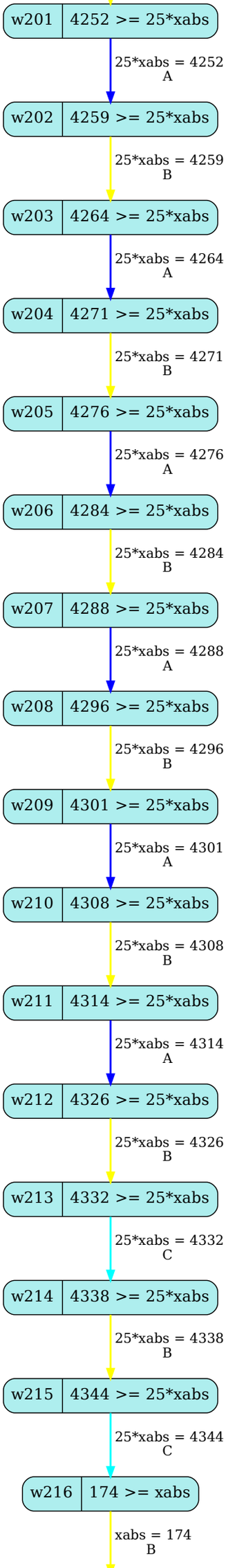
w201
4252 >= 25*xabs
25*xabs = 4252
A
w202
4259 >= 25*xabs
25*xabs = 4259
B
w203
4264 >= 25*xabs
25*xabs = 4264
A
w204
4271 >= 25*xabs
25*xabs = 4271
B
w205
4276 >= 25*xabs
25*xabs = 4276
A
w206
4284 >= 25*xabs
25*xabs = 4284
B
w207
4288 >= 25*xabs
25*xabs = 4288
A
w208
4296 >= 25*xabs
25*xabs = 4296
B
w209
4301 >= 25*xabs
25*xabs = 4301
A
w210
4308 >= 25*xabs
25*xabs = 4308
B
w211
4314 >= 25*xabs
25*xabs = 4314
A
w212
4326 >= 25*xabs
25*xabs = 4326
B
w213
4332 >= 25*xabs
25*xabs = 4332
C
w214
4338 >= 25*xabs
25*xabs = 4338
B
w215
4344 >= 25*xabs
25*xabs = 4344
C
w216
174 >= xabs
xabs = 174
B

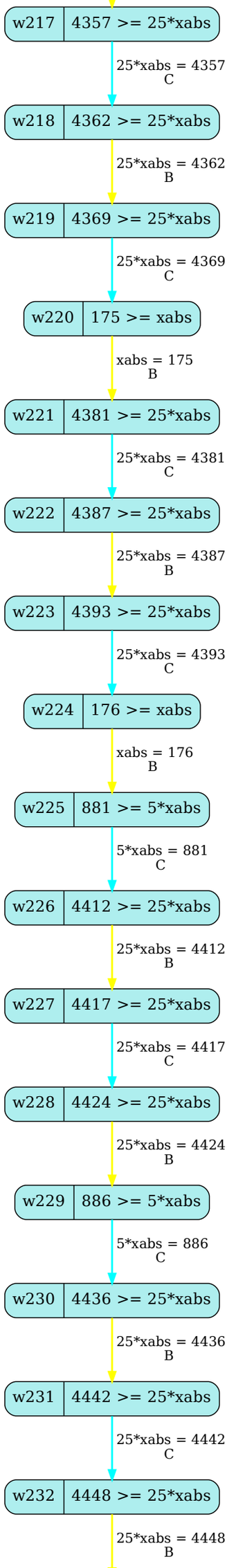
w217
4357 >= 25*xabs
25*xabs = 4357
C
w218
4362 >= 25*xabs
25*xabs = 4362
B
w219
4369 >= 25*xabs
25*xabs = 4369
C
w220
175 >= xabs
xabs = 175
B
w221
4381 >= 25*xabs
25*xabs = 4381
C
w222
4387 >= 25*xabs
25*xabs = 4387
B
w223
4393 >= 25*xabs
25*xabs = 4393
C
w224
176 >= xabs
xabs = 176
B
w225
881 >= 5*xabs
5*xabs = 881
C
w226
4412 >= 25*xabs
25*xabs = 4412
B
w227
4417 >= 25*xabs
25*xabs = 4417
C
w228
4424 >= 25*xabs
25*xabs = 4424
B
w229
886 >= 5*xabs
5*xabs = 886
C
w230
4436 >= 25*xabs
25*xabs = 4436
B
w231
4442 >= 25*xabs
25*xabs = 4442
C
w232
4448 >= 25*xabs
25*xabs = 4448
B

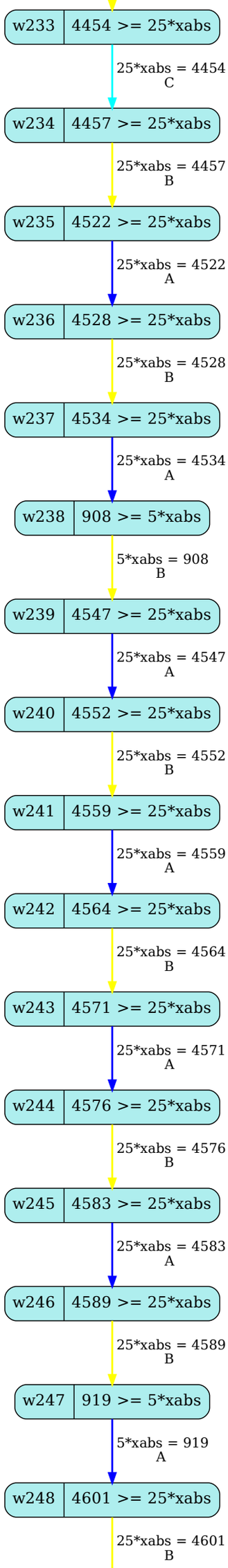
w233
4454 >= 25*xabs
25*xabs = 4454
C
w234
4457 >= 25*xabs
25*xabs = 4457
B
w235
4522 >= 25*xabs
25*xabs = 4522
A
w236
4528 >= 25*xabs
25*xabs = 4528
B
w237
4534 >= 25*xabs
25*xabs = 4534
A
w238
908 >= 5*xabs
5*xabs = 908
B
w239
4547 >= 25*xabs
25*xabs = 4547
A
w240
4552 >= 25*xabs
25*xabs = 4552
B
w241
4559 >= 25*xabs
25*xabs = 4559
A
w242
4564 >= 25*xabs
25*xabs = 4564
B
w243
4571 >= 25*xabs
25*xabs = 4571
A
w244
4576 >= 25*xabs
25*xabs = 4576
B
w245
4583 >= 25*xabs
25*xabs = 4583
A
w246
4589 >= 25*xabs
25*xabs = 4589
B
w247
919 >= 5*xabs
5*xabs = 919
A
w248
4601 >= 25*xabs
25*xabs = 4601
B

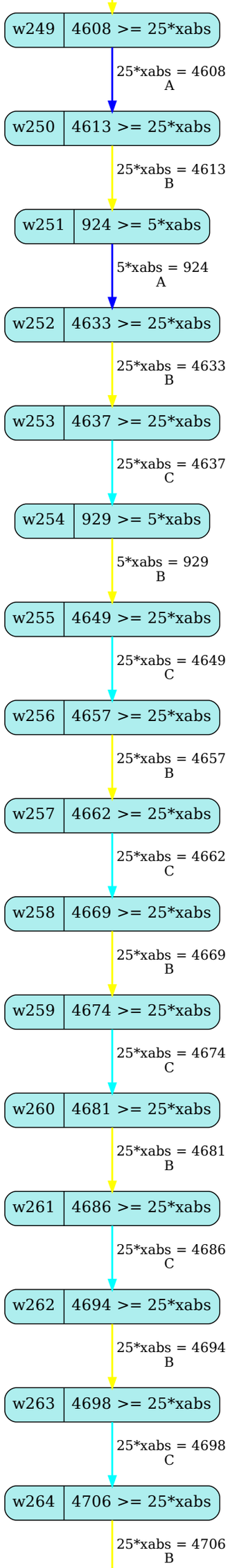
w249
4608 >= 25*xabs
25*xabs = 4608
A
w250
4613 >= 25*xabs
25*xabs = 4613
B
w251
924 >= 5*xabs
5*xabs = 924
A
w252
4633 >= 25*xabs
25*xabs = 4633
B
w253
4637 >= 25*xabs
25*xabs = 4637
C
w254
929 >= 5*xabs
5*xabs = 929
B
w255
4649 >= 25*xabs
25*xabs = 4649
C
w256
4657 >= 25*xabs
25*xabs = 4657
B
w257
4662 >= 25*xabs
25*xabs = 4662
C
w258
4669 >= 25*xabs
25*xabs = 4669
B
w259
4674 >= 25*xabs
25*xabs = 4674
C
w260
4681 >= 25*xabs
25*xabs = 4681
B
w261
4686 >= 25*xabs
25*xabs = 4686
C
w262
4694 >= 25*xabs
25*xabs = 4694
B
w263
4698 >= 25*xabs
25*xabs = 4698
C
w264
4706 >= 25*xabs
25*xabs = 4706
B

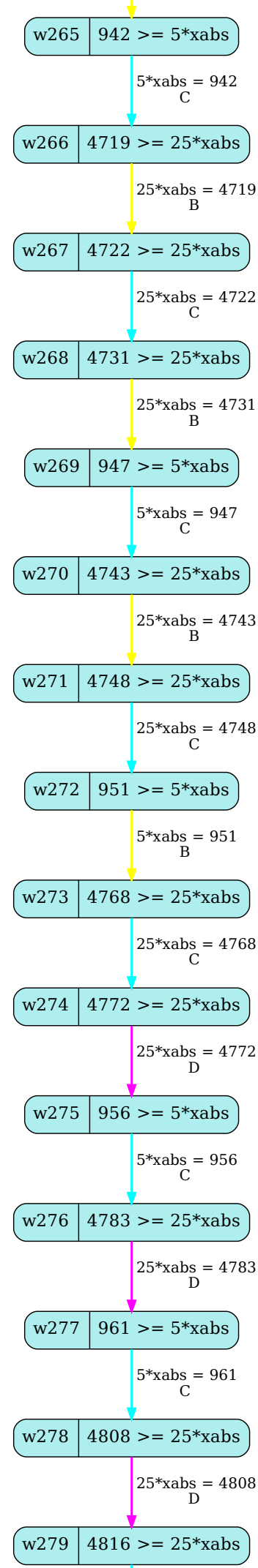
w265
942 >= 5*xabs
5*xabs = 942
C
w266
4719 >= 25*xabs
25*xabs = 4719
B
w267
4722 >= 25*xabs
25*xabs = 4722
C
w268
4731 >= 25*xabs
25*xabs = 4731
B
w269
947 >= 5*xabs
5*xabs = 947
C
w270
4743 >= 25*xabs
25*xabs = 4743
B
w271
4748 >= 25*xabs
25*xabs = 4748
C
w272
951 >= 5*xabs
5*xabs = 951
B
w273
4768 >= 25*xabs
25*xabs = 4768
C
w274
4772 >= 25*xabs
25*xabs = 4772
D
w275
956 >= 5*xabs
5*xabs = 956
C
w276
4783 >= 25*xabs
25*xabs = 4783
D
w277
961 >= 5*xabs
5*xabs = 961
C
w278
4808 >= 25*xabs
25*xabs = 4808
D
w279
4816 >= 25*xabs

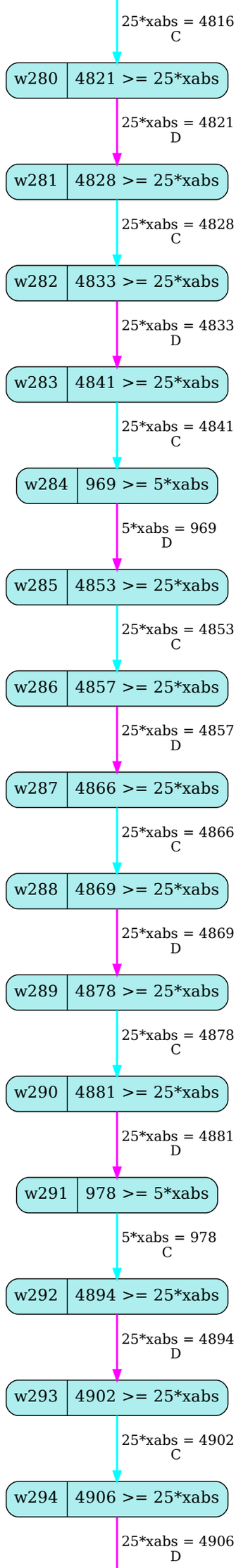
25*xabs = 4816
C
w280
4821 >= 25*xabs
25*xabs = 4821
D
w281
4828 >= 25*xabs
25*xabs = 4828
C
w282
4833 >= 25*xabs
25*xabs = 4833
D
w283
4841 >= 25*xabs
25*xabs = 4841
C
w284
969 >= 5*xabs
5*xabs = 969
D
w285
4853 >= 25*xabs
25*xabs = 4853
C
w286
4857 >= 25*xabs
25*xabs = 4857
D
w287
4866 >= 25*xabs
25*xabs = 4866
C
w288
4869 >= 25*xabs
25*xabs = 4869
D
w289
4878 >= 25*xabs
25*xabs = 4878
C
w290
4881 >= 25*xabs
25*xabs = 4881
D
w291
978 >= 5*xabs
5*xabs = 978
C
w292
4894 >= 25*xabs
25*xabs = 4894
D
w293
4902 >= 25*xabs
25*xabs = 4902
C
w294
4906 >= 25*xabs
25*xabs = 4906
D

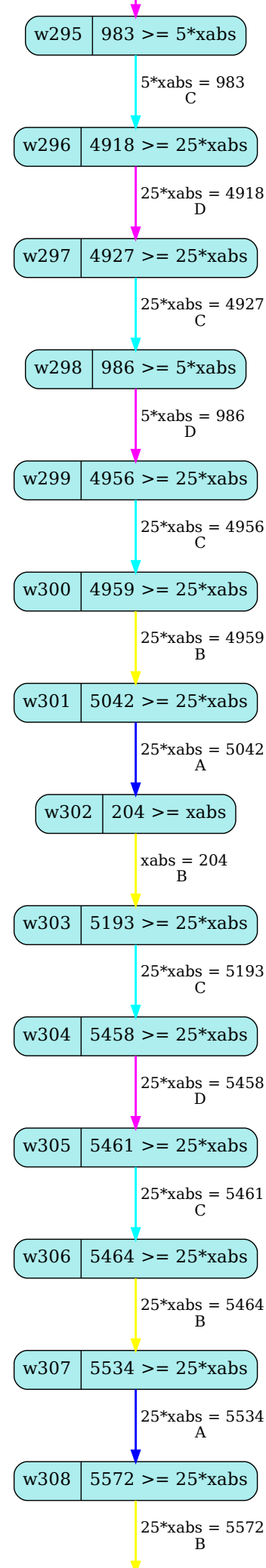
w295
983 >= 5*xabs
5*xabs = 983
C
w296
4918 >= 25*xabs
25*xabs = 4918
D
w297
4927 >= 25*xabs
25*xabs = 4927
C
w298
986 >= 5*xabs
5*xabs = 986
D
w299
4956 >= 25*xabs
25*xabs = 4956
C
w300
4959 >= 25*xabs
25*xabs = 4959
B
w301
5042 >= 25*xabs
25*xabs = 5042
A
w302
204 >= xabs
xabs = 204
B
w303
5193 >= 25*xabs
25*xabs = 5193
C
w304
5458 >= 25*xabs
25*xabs = 5458
D
w305
5461 >= 25*xabs
25*xabs = 5461
C
w306
5464 >= 25*xabs
25*xabs = 5464
B
w307
5534 >= 25*xabs
25*xabs = 5534
A
w308
5572 >= 25*xabs
25*xabs = 5572
B

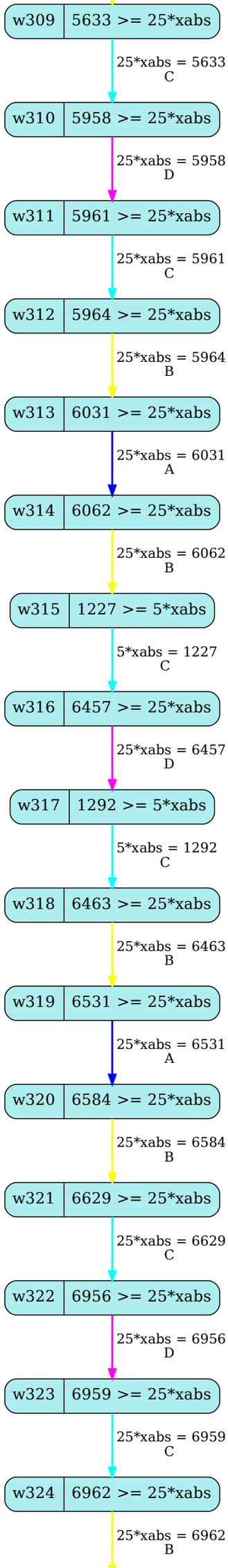
w309
5633 >= 25*xabs
25*xabs = 5633
C
w310
5958 >= 25*xabs
25*xabs = 5958
D
w311
5961 >= 25*xabs
25*xabs = 5961
C
w312
5964 >= 25*xabs
25*xabs = 5964
B
w313
6031 >= 25*xabs
25*xabs = 6031
A
w314
6062 >= 25*xabs
25*xabs = 6062
B
w315
1227 >= 5*xabs
5*xabs = 1227
C
w316
6457 >= 25*xabs
25*xabs = 6457
D
w317
1292 >= 5*xabs
5*xabs = 1292
C
w318
6463 >= 25*xabs
25*xabs = 6463
B
w319
6531 >= 25*xabs
25*xabs = 6531
A
w320
6584 >= 25*xabs
25*xabs = 6584
B
w321
6629 >= 25*xabs
25*xabs = 6629
C
w322
6956 >= 25*xabs
25*xabs = 6956
D
w323
6959 >= 25*xabs
25*xabs = 6959
C
w324
6962 >= 25*xabs
25*xabs = 6962
B

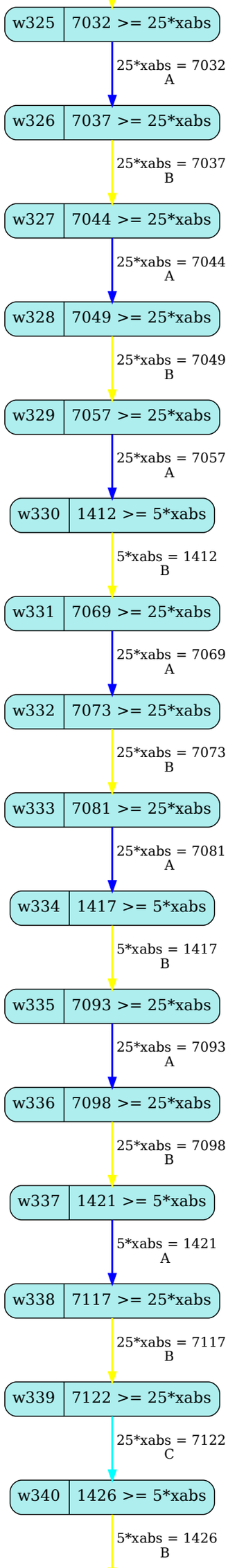
w325
7032 >= 25*xabs
25*xabs = 7032
A
w326
7037 >= 25*xabs
25*xabs = 7037
B
w327
7044 >= 25*xabs
25*xabs = 7044
A
w328
7049 >= 25*xabs
25*xabs = 7049
B
w329
7057 >= 25*xabs
25*xabs = 7057
A
w330
1412 >= 5*xabs
5*xabs = 1412
B
w331
7069 >= 25*xabs
25*xabs = 7069
A
w332
7073 >= 25*xabs
25*xabs = 7073
B
w333
7081 >= 25*xabs
25*xabs = 7081
A
w334
1417 >= 5*xabs
5*xabs = 1417
B
w335
7093 >= 25*xabs
25*xabs = 7093
A
w336
7098 >= 25*xabs
25*xabs = 7098
B
w337
1421 >= 5*xabs
5*xabs = 1421
A
w338
7117 >= 25*xabs
25*xabs = 7117
B
w339
7122 >= 25*xabs
25*xabs = 7122
C
w340
1426 >= 5*xabs
5*xabs = 1426
B

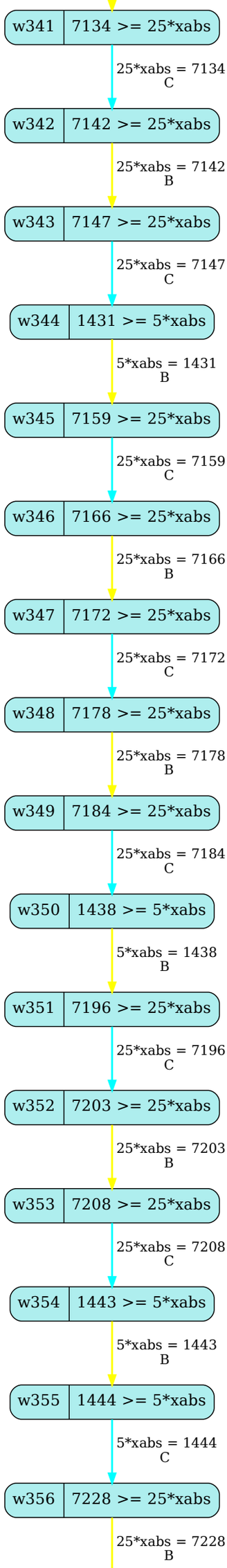
w341
7134 >= 25*xabs
25*xabs = 7134
C
w342
7142 >= 25*xabs
25*xabs = 7142
B
w343
7147 >= 25*xabs
25*xabs = 7147
C
w344
1431 >= 5*xabs
5*xabs = 1431
B
w345
7159 >= 25*xabs
25*xabs = 7159
C
w346
7166 >= 25*xabs
25*xabs = 7166
B
w347
7172 >= 25*xabs
25*xabs = 7172
C
w348
7178 >= 25*xabs
25*xabs = 7178
B
w349
7184 >= 25*xabs
25*xabs = 7184
C
w350
1438 >= 5*xabs
5*xabs = 1438
B
w351
7196 >= 25*xabs
25*xabs = 7196
C
w352
7203 >= 25*xabs
25*xabs = 7203
B
w353
7208 >= 25*xabs
25*xabs = 7208
C
w354
1443 >= 5*xabs
5*xabs = 1443
B
w355
1444 >= 5*xabs
5*xabs = 1444
C
w356
7228 >= 25*xabs
25*xabs = 7228
B

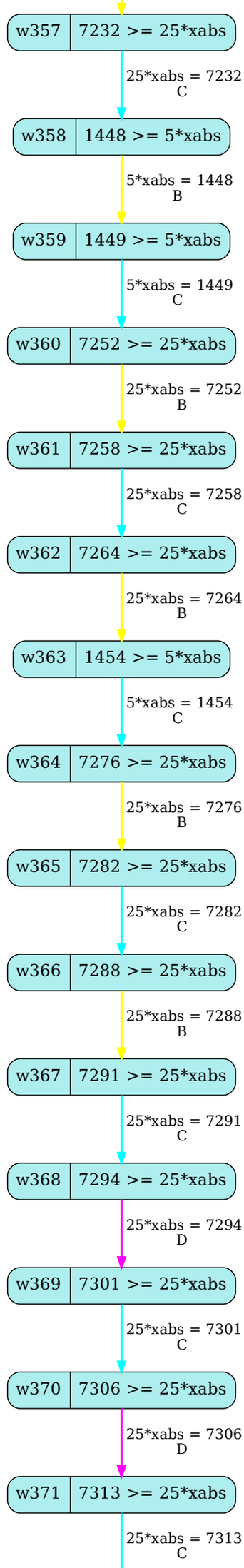
w357
7232 >= 25*xabs
25*xabs = 7232
C
w358
1448 >= 5*xabs
5*xabs = 1448
B
w359
1449 >= 5*xabs
5*xabs = 1449
C
w360
7252 >= 25*xabs
25*xabs = 7252
B
w361
7258 >= 25*xabs
25*xabs = 7258
C
w362
7264 >= 25*xabs
25*xabs = 7264
B
w363
1454 >= 5*xabs
5*xabs = 1454
C
w364
7276 >= 25*xabs
25*xabs = 7276
B
w365
7282 >= 25*xabs
25*xabs = 7282
C
w366
7288 >= 25*xabs
25*xabs = 7288
B
w367
7291 >= 25*xabs
25*xabs = 7291
C
w368
7294 >= 25*xabs
25*xabs = 7294
D
w369
7301 >= 25*xabs
25*xabs = 7301
C
w370
7306 >= 25*xabs
25*xabs = 7306
D
w371
7313 >= 25*xabs
25*xabs = 7313
C

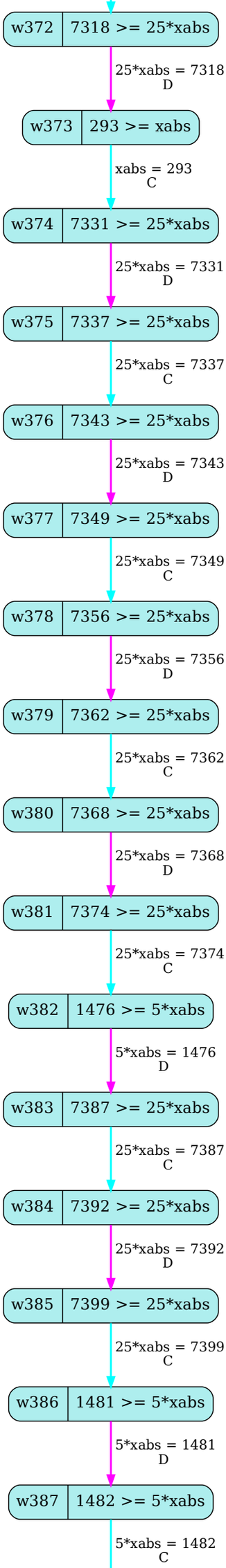
w372
7318 >= 25*xabs
25*xabs = 7318
D
w373
293 >= xabs
xabs = 293
C
w374
7331 >= 25*xabs
25*xabs = 7331
D
w375
7337 >= 25*xabs
25*xabs = 7337
C
w376
7343 >= 25*xabs
25*xabs = 7343
D
w377
7349 >= 25*xabs
25*xabs = 7349
C
w378
7356 >= 25*xabs
25*xabs = 7356
D
w379
7362 >= 25*xabs
25*xabs = 7362
C
w380
7368 >= 25*xabs
25*xabs = 7368
D
w381
7374 >= 25*xabs
25*xabs = 7374
C
w382
1476 >= 5*xabs
5*xabs = 1476
D
w383
7387 >= 25*xabs
25*xabs = 7387
C
w384
7392 >= 25*xabs
25*xabs = 7392
D
w385
7399 >= 25*xabs
25*xabs = 7399
C
w386
1481 >= 5*xabs
5*xabs = 1481
D
w387
1482 >= 5*xabs
5*xabs = 1482
C

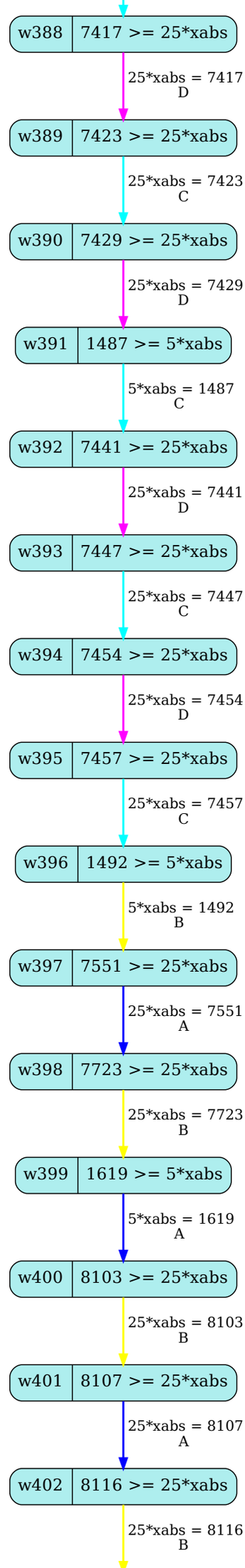
w388
7417 >= 25*xabs
25*xabs = 7417
D
w389
7423 >= 25*xabs
25*xabs = 7423
C
w390
7429 >= 25*xabs
25*xabs = 7429
D
w391
1487 >= 5*xabs
5*xabs = 1487
C
w392
7441 >= 25*xabs
25*xabs = 7441
D
w393
7447 >= 25*xabs
25*xabs = 7447
C
w394
7454 >= 25*xabs
25*xabs = 7454
D
w395
7457 >= 25*xabs
25*xabs = 7457
C
w396
1492 >= 5*xabs
5*xabs = 1492
B
w397
7551 >= 25*xabs
25*xabs = 7551
A
w398
7723 >= 25*xabs
25*xabs = 7723
B
w399
1619 >= 5*xabs
5*xabs = 1619
A
w400
8103 >= 25*xabs
25*xabs = 8103
B
w401
8107 >= 25*xabs
25*xabs = 8107
A
w402
8116 >= 25*xabs
25*xabs = 8116
B

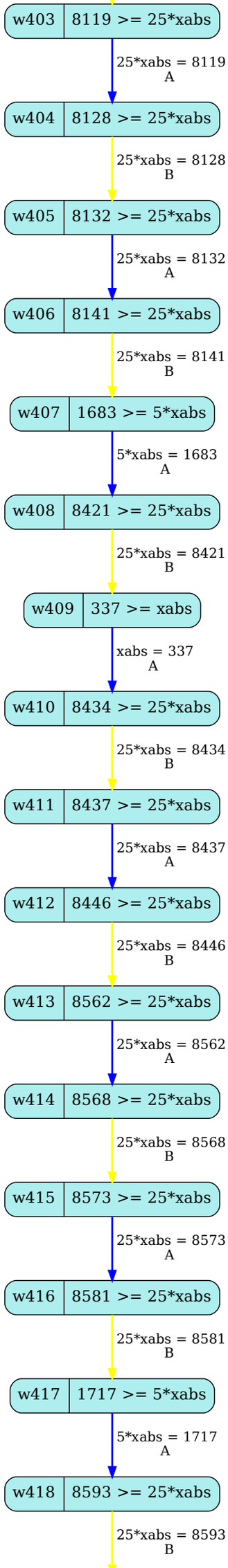
w403
8119 >= 25*xabs
25*xabs = 8119
A
w404
8128 >= 25*xabs
25*xabs = 8128
B
w405
8132 >= 25*xabs
25*xabs = 8132
A
w406
8141 >= 25*xabs
25*xabs = 8141
B
w407
1683 >= 5*xabs
5*xabs = 1683
A
w408
8421 >= 25*xabs
25*xabs = 8421
B
w409
337 >= xabs
xabs = 337
A
w410
8434 >= 25*xabs
25*xabs = 8434
B
w411
8437 >= 25*xabs
25*xabs = 8437
A
w412
8446 >= 25*xabs
25*xabs = 8446
B
w413
8562 >= 25*xabs
25*xabs = 8562
A
w414
8568 >= 25*xabs
25*xabs = 8568
B
w415
8573 >= 25*xabs
25*xabs = 8573
A
w416
8581 >= 25*xabs
25*xabs = 8581
B
w417
1717 >= 5*xabs
5*xabs = 1717
A
w418
8593 >= 25*xabs
25*xabs = 8593
B

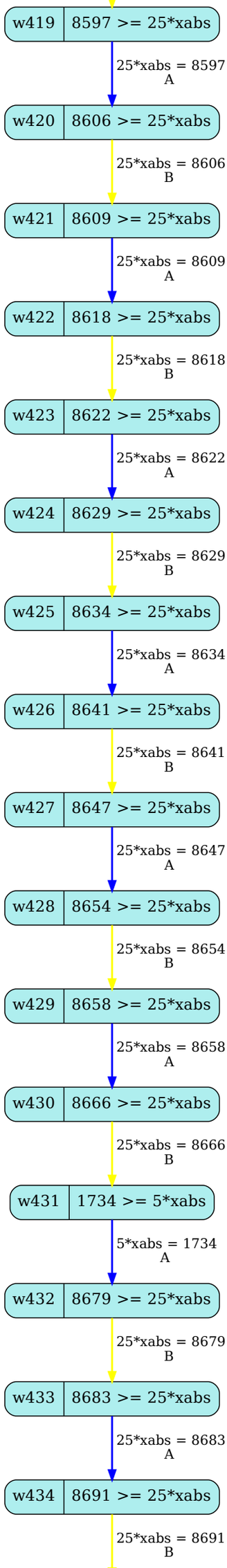
w419
8597 >= 25*xabs
25*xabs = 8597
A
w420
8606 >= 25*xabs
25*xabs = 8606
B
w421
8609 >= 25*xabs
25*xabs = 8609
A
w422
8618 >= 25*xabs
25*xabs = 8618
B
w423
8622 >= 25*xabs
25*xabs = 8622
A
w424
8629 >= 25*xabs
25*xabs = 8629
B
w425
8634 >= 25*xabs
25*xabs = 8634
A
w426
8641 >= 25*xabs
25*xabs = 8641
B
w427
8647 >= 25*xabs
25*xabs = 8647
A
w428
8654 >= 25*xabs
25*xabs = 8654
B
w429
8658 >= 25*xabs
25*xabs = 8658
A
w430
8666 >= 25*xabs
25*xabs = 8666
B
w431
1734 >= 5*xabs
5*xabs = 1734
A
w432
8679 >= 25*xabs
25*xabs = 8679
B
w433
8683 >= 25*xabs
25*xabs = 8683
A
w434
8691 >= 25*xabs
25*xabs = 8691
B

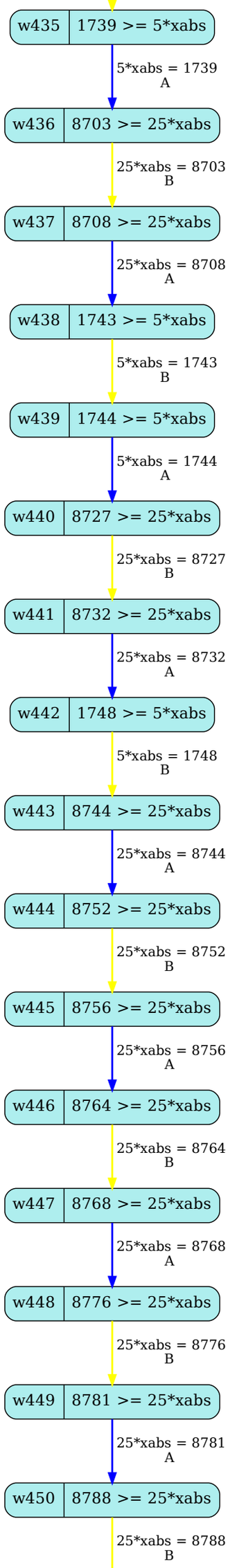
w435
1739 >= 5*xabs
5*xabs = 1739
A
w436
8703 >= 25*xabs
25*xabs = 8703
B
w437
8708 >= 25*xabs
25*xabs = 8708
A
w438
1743 >= 5*xabs
5*xabs = 1743
B
w439
1744 >= 5*xabs
5*xabs = 1744
A
w440
8727 >= 25*xabs
25*xabs = 8727
B
w441
8732 >= 25*xabs
25*xabs = 8732
A
w442
1748 >= 5*xabs
5*xabs = 1748
B
w443
8744 >= 25*xabs
25*xabs = 8744
A
w444
8752 >= 25*xabs
25*xabs = 8752
B
w445
8756 >= 25*xabs
25*xabs = 8756
A
w446
8764 >= 25*xabs
25*xabs = 8764
B
w447
8768 >= 25*xabs
25*xabs = 8768
A
w448
8776 >= 25*xabs
25*xabs = 8776
B
w449
8781 >= 25*xabs
25*xabs = 8781
A
w450
8788 >= 25*xabs
25*xabs = 8788
B

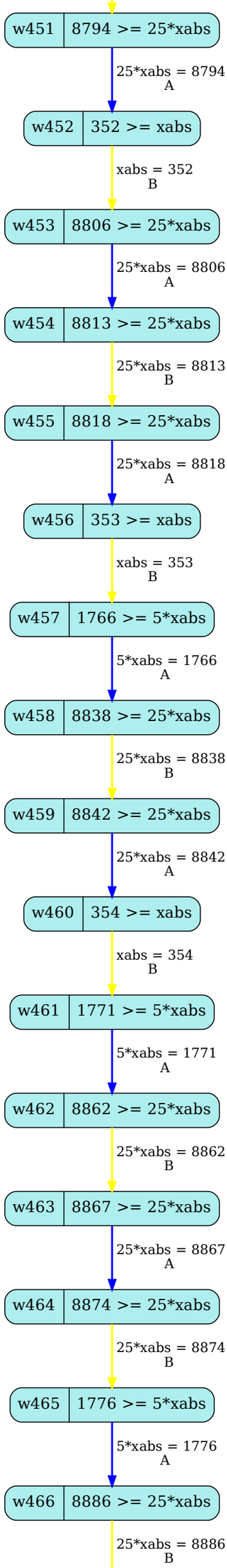
w451
8794 >= 25*xabs
25*xabs = 8794
A
w452
352 >= xabs
xabs = 352
B
w453
8806 >= 25*xabs
25*xabs = 8806
A
w454
8813 >= 25*xabs
25*xabs = 8813
B
w455
8818 >= 25*xabs
25*xabs = 8818
A
w456
353 >= xabs
xabs = 353
B
w457
1766 >= 5*xabs
5*xabs = 1766
A
w458
8838 >= 25*xabs
25*xabs = 8838
B
w459
8842 >= 25*xabs
25*xabs = 8842
A
w460
354 >= xabs
xabs = 354
B
w461
1771 >= 5*xabs
5*xabs = 1771
A
w462
8862 >= 25*xabs
25*xabs = 8862
B
w463
8867 >= 25*xabs
25*xabs = 8867
A
w464
8874 >= 25*xabs
25*xabs = 8874
B
w465
1776 >= 5*xabs
5*xabs = 1776
A
w466
8886 >= 25*xabs
25*xabs = 8886
B

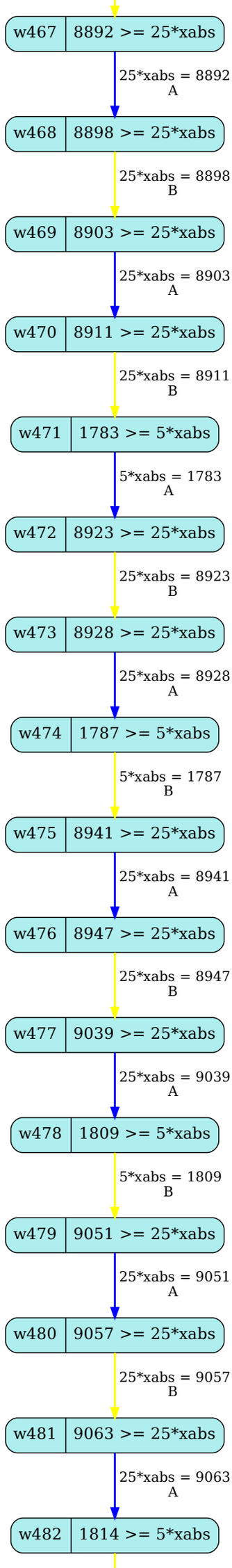
w467
8892 >= 25*xabs
25*xabs = 8892
A
w468
8898 >= 25*xabs
25*xabs = 8898
B
w469
8903 >= 25*xabs
25*xabs = 8903
A
w470
8911 >= 25*xabs
25*xabs = 8911
B
w471
1783 >= 5*xabs
5*xabs = 1783
A
w472
8923 >= 25*xabs
25*xabs = 8923
B
w473
8928 >= 25*xabs
25*xabs = 8928
A
w474
1787 >= 5*xabs
5*xabs = 1787
B
w475
8941 >= 25*xabs
25*xabs = 8941
A
w476
8947 >= 25*xabs
25*xabs = 8947
B
w477
9039 >= 25*xabs
25*xabs = 9039
A
w478
1809 >= 5*xabs
5*xabs = 1809
B
w479
9051 >= 25*xabs
25*xabs = 9051
A
w480
9057 >= 25*xabs
25*xabs = 9057
B
w481
9063 >= 25*xabs
25*xabs = 9063
A
w482
1814 >= 5*xabs

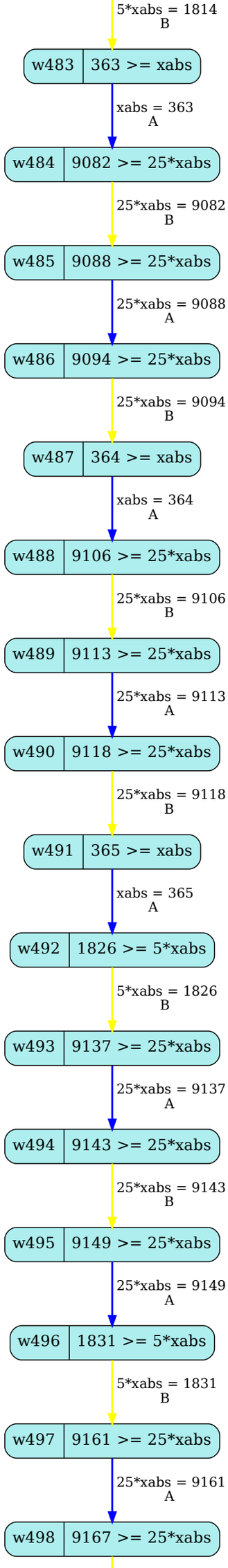
5*xabs = 1814
B
w483
363 >= xabs
xabs = 363
A
w484
9082 >= 25*xabs
25*xabs = 9082
B
w485
9088 >= 25*xabs
25*xabs = 9088
A
w486
9094 >= 25*xabs
25*xabs = 9094
B
w487
364 >= xabs
xabs = 364
A
w488
9106 >= 25*xabs
25*xabs = 9106
B
w489
9113 >= 25*xabs
25*xabs = 9113
A
w490
9118 >= 25*xabs
25*xabs = 9118
B
w491
365 >= xabs
xabs = 365
A
w492
1826 >= 5*xabs
5*xabs = 1826
B
w493
9137 >= 25*xabs
25*xabs = 9137
A
w494
9143 >= 25*xabs
25*xabs = 9143
B
w495
9149 >= 25*xabs
25*xabs = 9149
A
w496
1831 >= 5*xabs
5*xabs = 1831
B
w497
9161 >= 25*xabs
25*xabs = 9161
A
w498
9167 >= 25*xabs

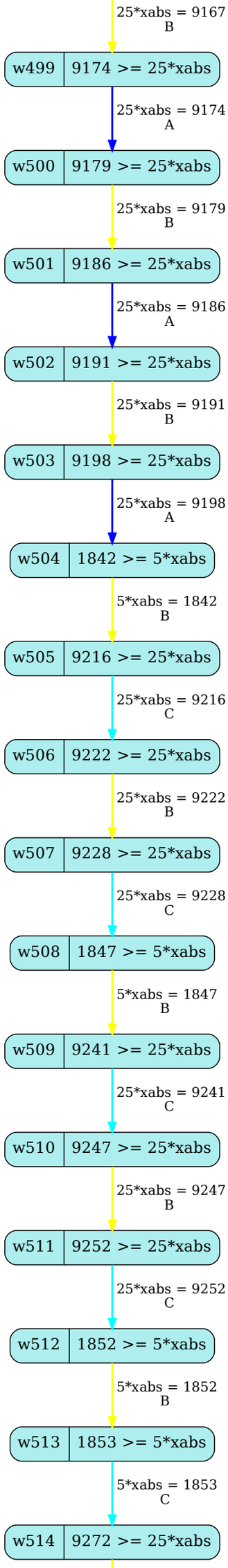
25*xabs = 9167
B
w499
9174 >= 25*xabs
25*xabs = 9174
A
w500
9179 >= 25*xabs
25*xabs = 9179
B
w501
9186 >= 25*xabs
25*xabs = 9186
A
w502
9191 >= 25*xabs
25*xabs = 9191
B
w503
9198 >= 25*xabs
25*xabs = 9198
A
w504
1842 >= 5*xabs
5*xabs = 1842
B
w505
9216 >= 25*xabs
25*xabs = 9216
C
w506
9222 >= 25*xabs
25*xabs = 9222
B
w507
9228 >= 25*xabs
25*xabs = 9228
C
w508
1847 >= 5*xabs
5*xabs = 1847
B
w509
9241 >= 25*xabs
25*xabs = 9241
C
w510
9247 >= 25*xabs
25*xabs = 9247
B
w511
9252 >= 25*xabs
25*xabs = 9252
C
w512
1852 >= 5*xabs
5*xabs = 1852
B
w513
1853 >= 5*xabs
5*xabs = 1853
C
w514
9272 >= 25*xabs

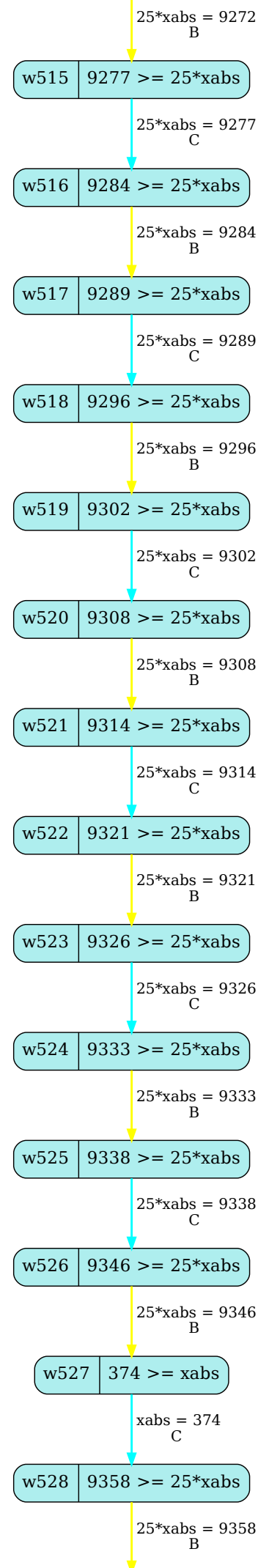
25*xabs = 9272
B
w515
9277 >= 25*xabs
25*xabs = 9277
C
w516
9284 >= 25*xabs
25*xabs = 9284
B
w517
9289 >= 25*xabs
25*xabs = 9289
C
w518
9296 >= 25*xabs
25*xabs = 9296
B
w519
9302 >= 25*xabs
25*xabs = 9302
C
w520
9308 >= 25*xabs
25*xabs = 9308
B
w521
9314 >= 25*xabs
25*xabs = 9314
C
w522
9321 >= 25*xabs
25*xabs = 9321
B
w523
9326 >= 25*xabs
25*xabs = 9326
C
w524
9333 >= 25*xabs
25*xabs = 9333
B
w525
9338 >= 25*xabs
25*xabs = 9338
C
w526
9346 >= 25*xabs
25*xabs = 9346
B
w527
374 >= xabs
xabs = 374
C
w528
9358 >= 25*xabs
25*xabs = 9358
B

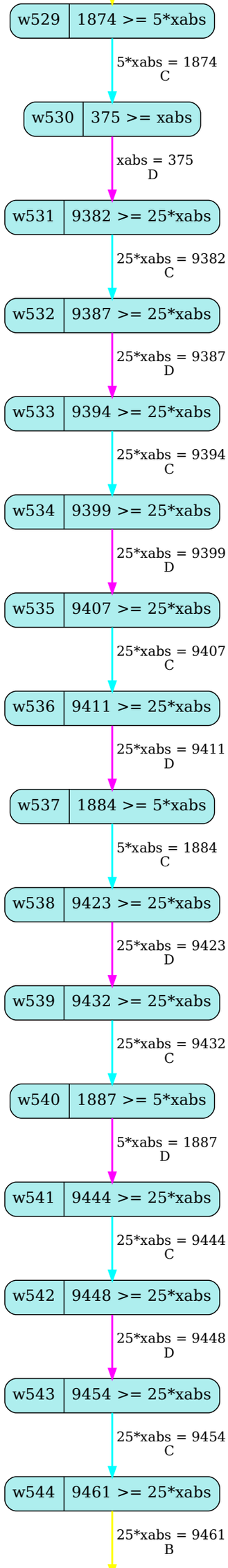
w529
1874 >= 5*xabs
5*xabs = 1874
C
w530
375 >= xabs
xabs = 375
D
w531
9382 >= 25*xabs
25*xabs = 9382
C
w532
9387 >= 25*xabs
25*xabs = 9387
D
w533
9394 >= 25*xabs
25*xabs = 9394
C
w534
9399 >= 25*xabs
25*xabs = 9399
D
w535
9407 >= 25*xabs
25*xabs = 9407
C
w536
9411 >= 25*xabs
25*xabs = 9411
D
w537
1884 >= 5*xabs
5*xabs = 1884
C
w538
9423 >= 25*xabs
25*xabs = 9423
D
w539
9432 >= 25*xabs
25*xabs = 9432
C
w540
1887 >= 5*xabs
5*xabs = 1887
D
w541
9444 >= 25*xabs
25*xabs = 9444
C
w542
9448 >= 25*xabs
25*xabs = 9448
D
w543
9454 >= 25*xabs
25*xabs = 9454
C
w544
9461 >= 25*xabs
25*xabs = 9461
B

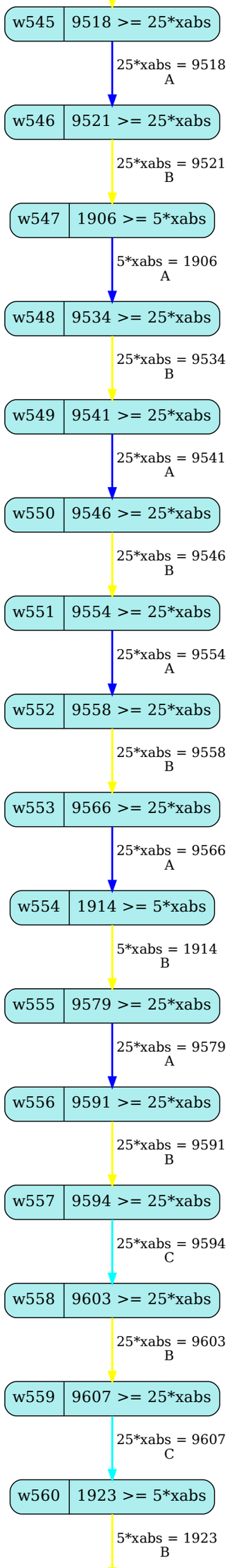
w545
9518 >= 25*xabs
25*xabs = 9518
A
w546
9521 >= 25*xabs
25*xabs = 9521
B
w547
1906 >= 5*xabs
5*xabs = 1906
A
w548
9534 >= 25*xabs
25*xabs = 9534
B
w549
9541 >= 25*xabs
25*xabs = 9541
A
w550
9546 >= 25*xabs
25*xabs = 9546
B
w551
9554 >= 25*xabs
25*xabs = 9554
A
w552
9558 >= 25*xabs
25*xabs = 9558
B
w553
9566 >= 25*xabs
25*xabs = 9566
A
w554
1914 >= 5*xabs
5*xabs = 1914
B
w555
9579 >= 25*xabs
25*xabs = 9579
A
w556
9591 >= 25*xabs
25*xabs = 9591
B
w557
9594 >= 25*xabs
25*xabs = 9594
C
w558
9603 >= 25*xabs
25*xabs = 9603
B
w559
9607 >= 25*xabs
25*xabs = 9607
C
w560
1923 >= 5*xabs
5*xabs = 1923
B

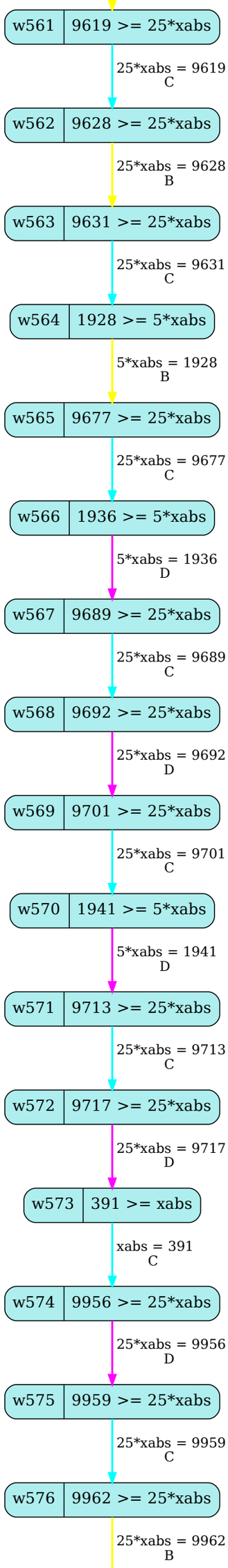
w561
9619 >= 25*xabs
25*xabs = 9619
C
w562
9628 >= 25*xabs
25*xabs = 9628
B
w563
9631 >= 25*xabs
25*xabs = 9631
C
w564
1928 >= 5*xabs
5*xabs = 1928
B
w565
9677 >= 25*xabs
25*xabs = 9677
C
w566
1936 >= 5*xabs
5*xabs = 1936
D
w567
9689 >= 25*xabs
25*xabs = 9689
C
w568
9692 >= 25*xabs
25*xabs = 9692
D
w569
9701 >= 25*xabs
25*xabs = 9701
C
w570
1941 >= 5*xabs
5*xabs = 1941
D
w571
9713 >= 25*xabs
25*xabs = 9713
C
w572
9717 >= 25*xabs
25*xabs = 9717
D
w573
391 >= xabs
xabs = 391
C
w574
9956 >= 25*xabs
25*xabs = 9956
D
w575
9959 >= 25*xabs
25*xabs = 9959
C
w576
9962 >= 25*xabs
25*xabs = 9962
B

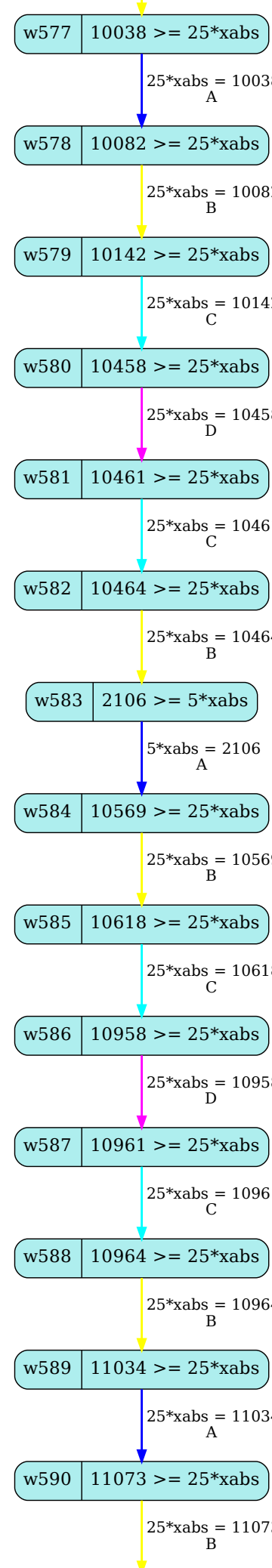
w577
10038 >= 25*xabs
25*xabs = 10038
A
w578
10082 >= 25*xabs
25*xabs = 10082
B
w579
10142 >= 25*xabs
25*xabs = 10142
C
w580
10458 >= 25*xabs
25*xabs = 10458
D
w581
10461 >= 25*xabs
25*xabs = 10461
C
w582
10464 >= 25*xabs
25*xabs = 10464
B
w583
2106 >= 5*xabs
5*xabs = 2106
A
w584
10569 >= 25*xabs
25*xabs = 10569
B
w585
10618 >= 25*xabs
25*xabs = 10618
C
w586
10958 >= 25*xabs
25*xabs = 10958
D
w587
10961 >= 25*xabs
25*xabs = 10961
C
w588
10964 >= 25*xabs
25*xabs = 10964
B
w589
11034 >= 25*xabs
25*xabs = 11034
A
w590
11073 >= 25*xabs
25*xabs = 11073
B

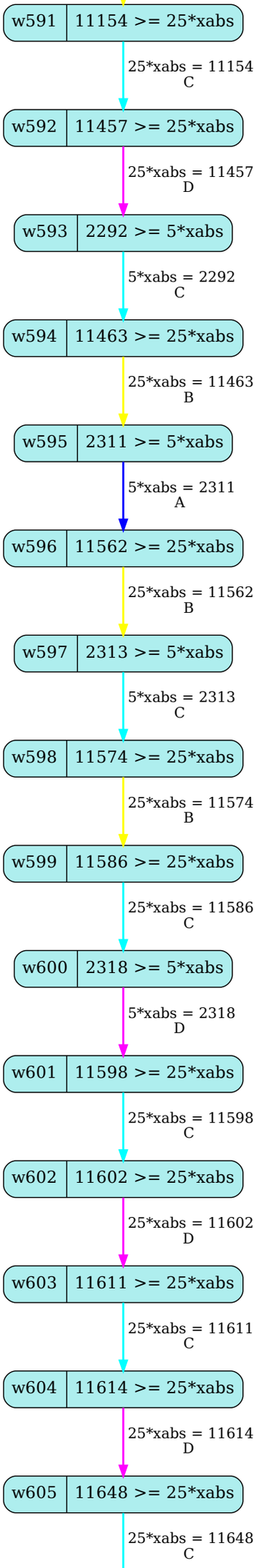
w591
11154 >= 25*xabs
25*xabs = 11154
C
w592
11457 >= 25*xabs
25*xabs = 11457
D
w593
2292 >= 5*xabs
5*xabs = 2292
C
w594
11463 >= 25*xabs
25*xabs = 11463
B
w595
2311 >= 5*xabs
5*xabs = 2311
A
w596
11562 >= 25*xabs
25*xabs = 11562
B
w597
2313 >= 5*xabs
5*xabs = 2313
C
w598
11574 >= 25*xabs
25*xabs = 11574
B
w599
11586 >= 25*xabs
25*xabs = 11586
C
w600
2318 >= 5*xabs
5*xabs = 2318
D
w601
11598 >= 25*xabs
25*xabs = 11598
C
w602
11602 >= 25*xabs
25*xabs = 11602
D
w603
11611 >= 25*xabs
25*xabs = 11611
C
w604
11614 >= 25*xabs
25*xabs = 11614
D
w605
11648 >= 25*xabs
25*xabs = 11648
C

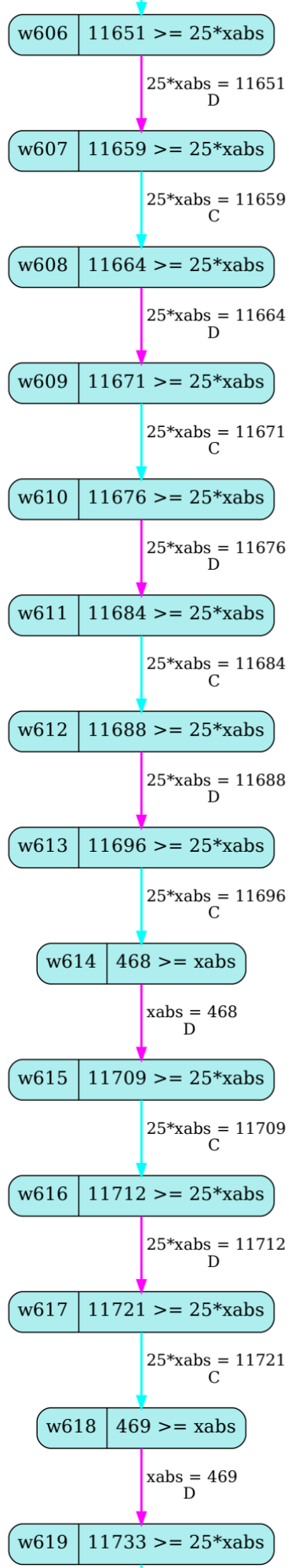
w606
11651 >= 25*xabs
25*xabs = 11651
D
w607
11659 >= 25*xabs
25*xabs = 11659
C
w608
11664 >= 25*xabs
25*xabs = 11664
D
w609
11671 >= 25*xabs
25*xabs = 11671
C
w610
11676 >= 25*xabs
25*xabs = 11676
D
w611
11684 >= 25*xabs
25*xabs = 11684
C
w612
11688 >= 25*xabs
25*xabs = 11688
D
w613
11696 >= 25*xabs
25*xabs = 11696
C
w614
468 >= xabs
xabs = 468
D
w615
11709 >= 25*xabs
25*xabs = 11709
C
w616
11712 >= 25*xabs
25*xabs = 11712
D
w617
11721 >= 25*xabs
25*xabs = 11721
C
w618
469 >= xabs
xabs = 469
D
w619
11733 >= 25*xabs

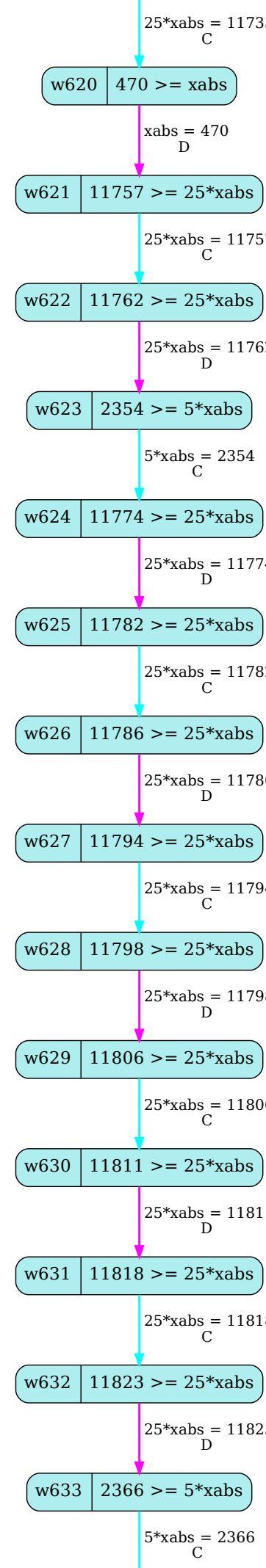
25*xabs = 11733
C
w620
470 >= xabs
xabs = 470
D
w621
11757 >= 25*xabs
25*xabs = 11757
C
w622
11762 >= 25*xabs
25*xabs = 11762
D
w623
2354 >= 5*xabs
5*xabs = 2354
C
w624
11774 >= 25*xabs
25*xabs = 11774
D
w625
11782 >= 25*xabs
25*xabs = 11782
C
w626
11786 >= 25*xabs
25*xabs = 11786
D
w627
11794 >= 25*xabs
25*xabs = 11794
C
w628
11798 >= 25*xabs
25*xabs = 11798
D
w629
11806 >= 25*xabs
25*xabs = 11806
C
w630
11811 >= 25*xabs
25*xabs = 11811
D
w631
11818 >= 25*xabs
25*xabs = 11818
C
w632
11823 >= 25*xabs
25*xabs = 11823
D
w633
2366 >= 5*xabs
5*xabs = 2366
C

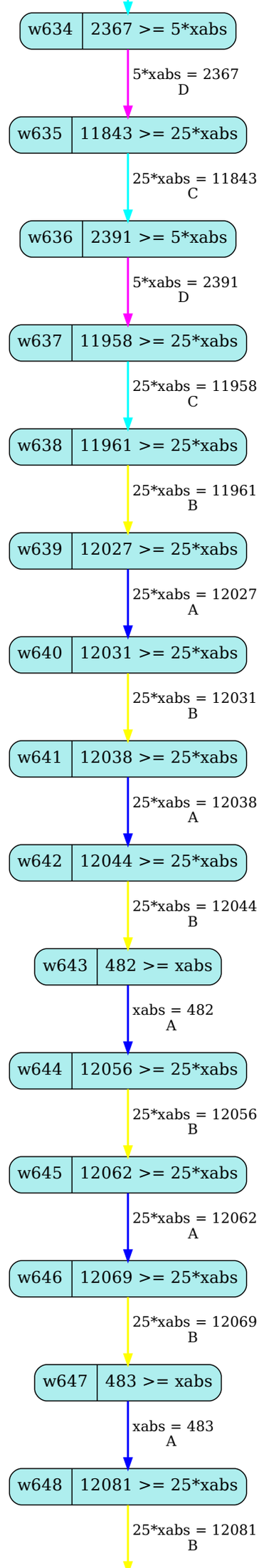
w634
2367 >= 5*xabs
5*xabs = 2367
D
w635
11843 >= 25*xabs
25*xabs = 11843
C
w636
2391 >= 5*xabs
5*xabs = 2391
D
w637
11958 >= 25*xabs
25*xabs = 11958
C
w638
11961 >= 25*xabs
25*xabs = 11961
B
w639
12027 >= 25*xabs
25*xabs = 12027
A
w640
12031 >= 25*xabs
25*xabs = 12031
B
w641
12038 >= 25*xabs
25*xabs = 12038
A
w642
12044 >= 25*xabs
25*xabs = 12044
B
w643
482 >= xabs
xabs = 482
A
w644
12056 >= 25*xabs
25*xabs = 12056
B
w645
12062 >= 25*xabs
25*xabs = 12062
A
w646
12069 >= 25*xabs
25*xabs = 12069
B
w647
483 >= xabs
xabs = 483
A
w648
12081 >= 25*xabs
25*xabs = 12081
B

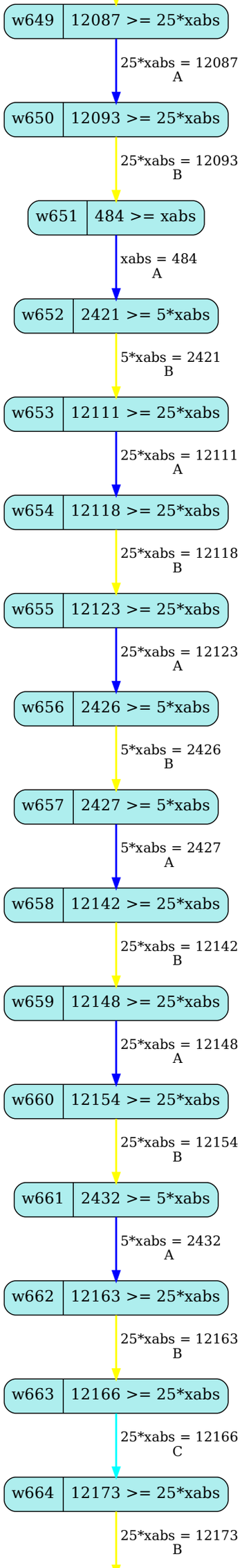
w649
12087 >= 25*xabs
25*xabs = 12087
A
w650
12093 >= 25*xabs
25*xabs = 12093
B
w651
484 >= xabs
xabs = 484
A
w652
2421 >= 5*xabs
5*xabs = 2421
B
w653
12111 >= 25*xabs
25*xabs = 12111
A
w654
12118 >= 25*xabs
25*xabs = 12118
B
w655
12123 >= 25*xabs
25*xabs = 12123
A
w656
2426 >= 5*xabs
5*xabs = 2426
B
w657
2427 >= 5*xabs
5*xabs = 2427
A
w658
12142 >= 25*xabs
25*xabs = 12142
B
w659
12148 >= 25*xabs
25*xabs = 12148
A
w660
12154 >= 25*xabs
25*xabs = 12154
B
w661
2432 >= 5*xabs
5*xabs = 2432
A
w662
12163 >= 25*xabs
25*xabs = 12163
B
w663
12166 >= 25*xabs
25*xabs = 12166
C
w664
12173 >= 25*xabs
25*xabs = 12173
B

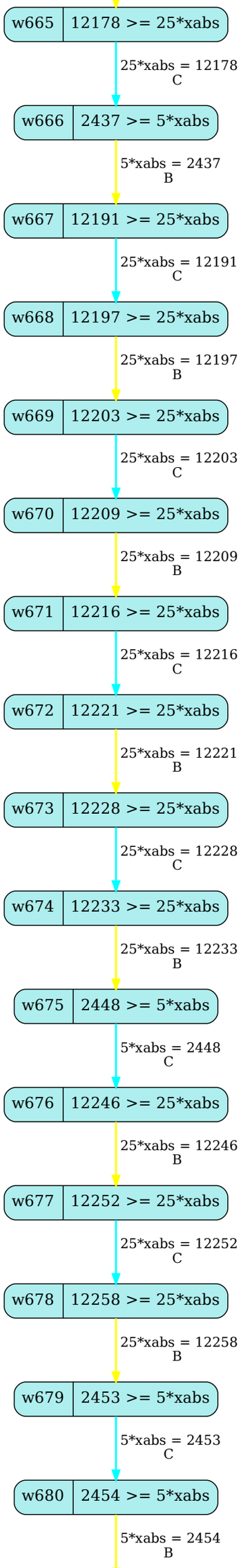
w665
12178 >= 25*xabs
25*xabs = 12178
C
w666
2437 >= 5*xabs
5*xabs = 2437
B
w667
12191 >= 25*xabs
25*xabs = 12191
C
w668
12197 >= 25*xabs
25*xabs = 12197
B
w669
12203 >= 25*xabs
25*xabs = 12203
C
w670
12209 >= 25*xabs
25*xabs = 12209
B
w671
12216 >= 25*xabs
25*xabs = 12216
C
w672
12221 >= 25*xabs
25*xabs = 12221
B
w673
12228 >= 25*xabs
25*xabs = 12228
C
w674
12233 >= 25*xabs
25*xabs = 12233
B
w675
2448 >= 5*xabs
5*xabs = 2448
C
w676
12246 >= 25*xabs
25*xabs = 12246
B
w677
12252 >= 25*xabs
25*xabs = 12252
C
w678
12258 >= 25*xabs
25*xabs = 12258
B
w679
2453 >= 5*xabs
5*xabs = 2453
C
w680
2454 >= 5*xabs
5*xabs = 2454
B

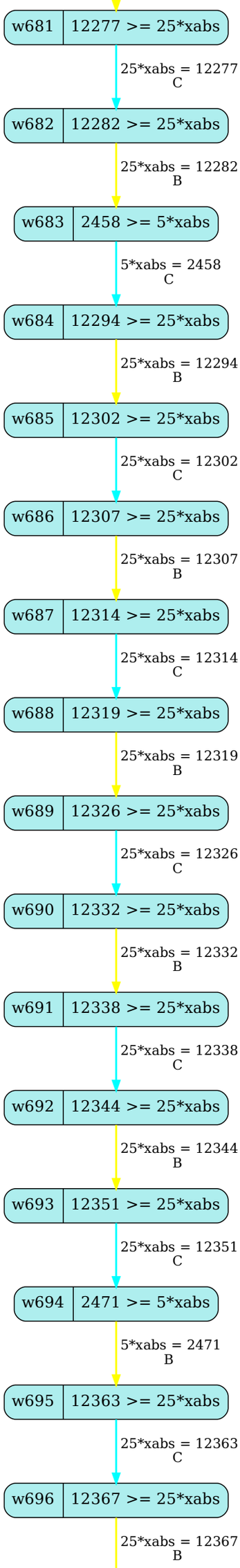
w681
12277 >= 25*xabs
25*xabs = 12277
C
w682
12282 >= 25*xabs
25*xabs = 12282
B
w683
2458 >= 5*xabs
5*xabs = 2458
C
w684
12294 >= 25*xabs
25*xabs = 12294
B
w685
12302 >= 25*xabs
25*xabs = 12302
C
w686
12307 >= 25*xabs
25*xabs = 12307
B
w687
12314 >= 25*xabs
25*xabs = 12314
C
w688
12319 >= 25*xabs
25*xabs = 12319
B
w689
12326 >= 25*xabs
25*xabs = 12326
C
w690
12332 >= 25*xabs
25*xabs = 12332
B
w691
12338 >= 25*xabs
25*xabs = 12338
C
w692
12344 >= 25*xabs
25*xabs = 12344
B
w693
12351 >= 25*xabs
25*xabs = 12351
C
w694
2471 >= 5*xabs
5*xabs = 2471
B
w695
12363 >= 25*xabs
25*xabs = 12363
C
w696
12367 >= 25*xabs
25*xabs = 12367
B

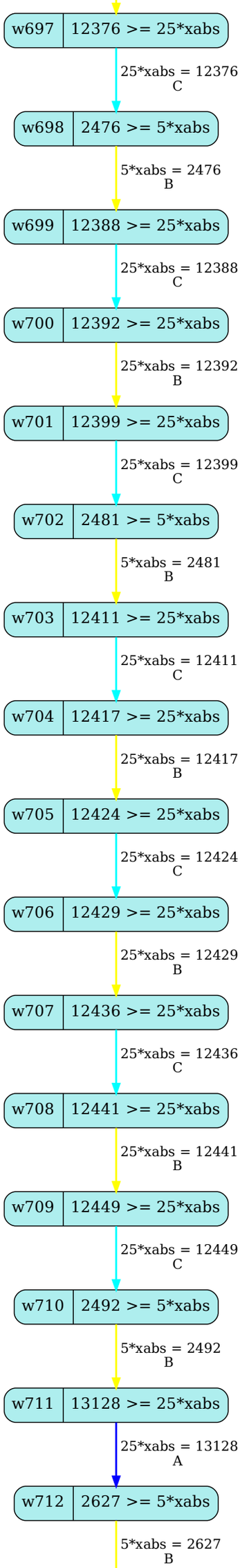
w697
12376 >= 25*xabs
25*xabs = 12376
C
w698
2476 >= 5*xabs
5*xabs = 2476
B
w699
12388 >= 25*xabs
25*xabs = 12388
C
w700
12392 >= 25*xabs
25*xabs = 12392
B
w701
12399 >= 25*xabs
25*xabs = 12399
C
w702
2481 >= 5*xabs
5*xabs = 2481
B
w703
12411 >= 25*xabs
25*xabs = 12411
C
w704
12417 >= 25*xabs
25*xabs = 12417
B
w705
12424 >= 25*xabs
25*xabs = 12424
C
w706
12429 >= 25*xabs
25*xabs = 12429
B
w707
12436 >= 25*xabs
25*xabs = 12436
C
w708
12441 >= 25*xabs
25*xabs = 12441
B
w709
12449 >= 25*xabs
25*xabs = 12449
C
w710
2492 >= 5*xabs
5*xabs = 2492
B
w711
13128 >= 25*xabs
25*xabs = 13128
A
w712
2627 >= 5*xabs
5*xabs = 2627
B

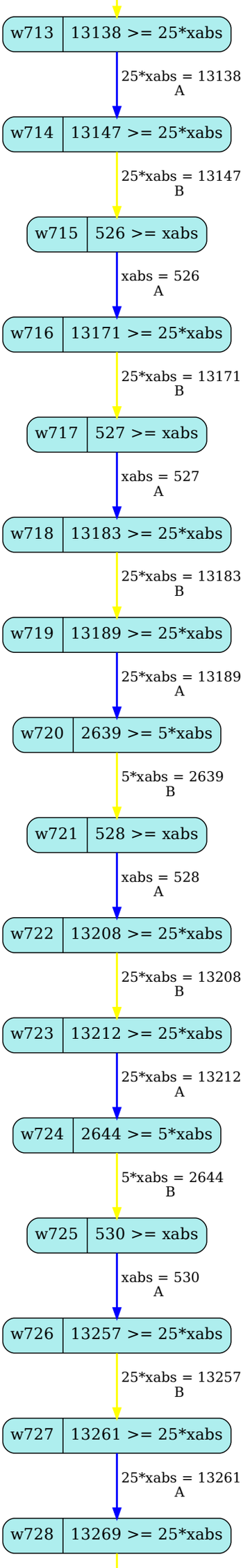
w713
13138 >= 25*xabs
25*xabs = 13138
A
w714
13147 >= 25*xabs
25*xabs = 13147
B
w715
526 >= xabs
xabs = 526
A
w716
13171 >= 25*xabs
25*xabs = 13171
B
w717
527 >= xabs
xabs = 527
A
w718
13183 >= 25*xabs
25*xabs = 13183
B
w719
13189 >= 25*xabs
25*xabs = 13189
A
w720
2639 >= 5*xabs
5*xabs = 2639
B
w721
528 >= xabs
xabs = 528
A
w722
13208 >= 25*xabs
25*xabs = 13208
B
w723
13212 >= 25*xabs
25*xabs = 13212
A
w724
2644 >= 5*xabs
5*xabs = 2644
B
w725
530 >= xabs
xabs = 530
A
w726
13257 >= 25*xabs
25*xabs = 13257
B
w727
13261 >= 25*xabs
25*xabs = 13261
A
w728
13269 >= 25*xabs

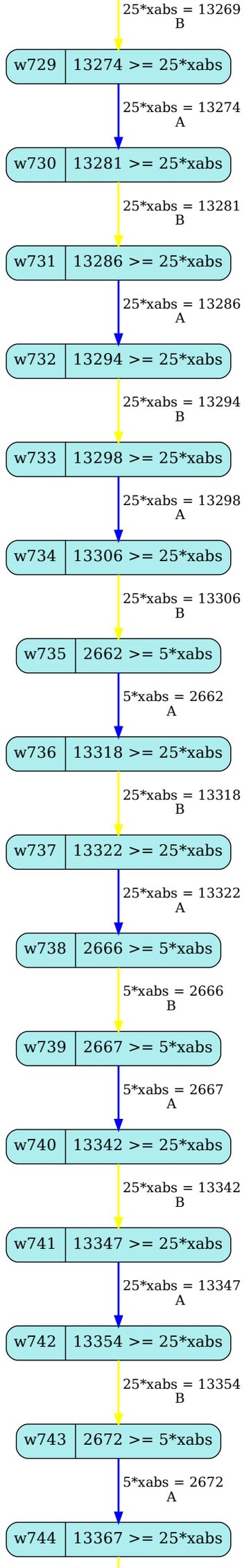
25*xabs = 13269
B
w729
13274 >= 25*xabs
25*xabs = 13274
A
w730
13281 >= 25*xabs
25*xabs = 13281
B
w731
13286 >= 25*xabs
25*xabs = 13286
A
w732
13294 >= 25*xabs
25*xabs = 13294
B
w733
13298 >= 25*xabs
25*xabs = 13298
A
w734
13306 >= 25*xabs
25*xabs = 13306
B
w735
2662 >= 5*xabs
5*xabs = 2662
A
w736
13318 >= 25*xabs
25*xabs = 13318
B
w737
13322 >= 25*xabs
25*xabs = 13322
A
w738
2666 >= 5*xabs
5*xabs = 2666
B
w739
2667 >= 5*xabs
5*xabs = 2667
A
w740
13342 >= 25*xabs
25*xabs = 13342
B
w741
13347 >= 25*xabs
25*xabs = 13347
A
w742
13354 >= 25*xabs
25*xabs = 13354
B
w743
2672 >= 5*xabs
5*xabs = 2672
A
w744
13367 >= 25*xabs

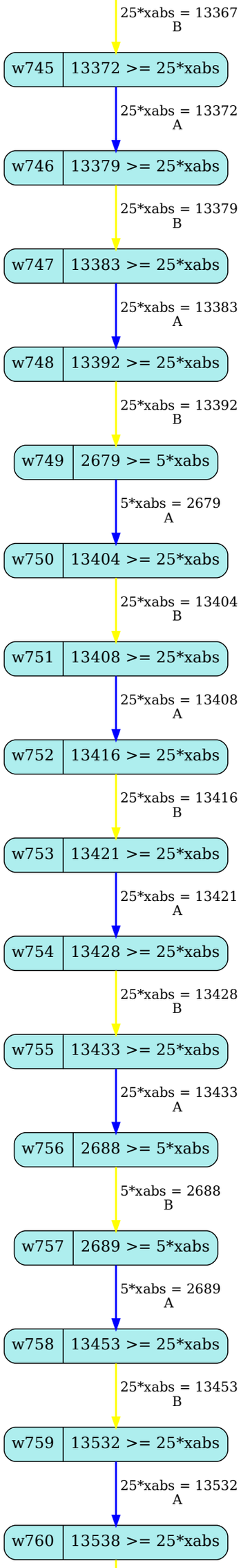
25*xabs = 13367
B
w745
13372 >= 25*xabs
25*xabs = 13372
A
w746
13379 >= 25*xabs
25*xabs = 13379
B
w747
13383 >= 25*xabs
25*xabs = 13383
A
w748
13392 >= 25*xabs
25*xabs = 13392
B
w749
2679 >= 5*xabs
5*xabs = 2679
A
w750
13404 >= 25*xabs
25*xabs = 13404
B
w751
13408 >= 25*xabs
25*xabs = 13408
A
w752
13416 >= 25*xabs
25*xabs = 13416
B
w753
13421 >= 25*xabs
25*xabs = 13421
A
w754
13428 >= 25*xabs
25*xabs = 13428
B
w755
13433 >= 25*xabs
25*xabs = 13433
A
w756
2688 >= 5*xabs
5*xabs = 2688
B
w757
2689 >= 5*xabs
5*xabs = 2689
A
w758
13453 >= 25*xabs
25*xabs = 13453
B
w759
13532 >= 25*xabs
25*xabs = 13532
A
w760
13538 >= 25*xabs

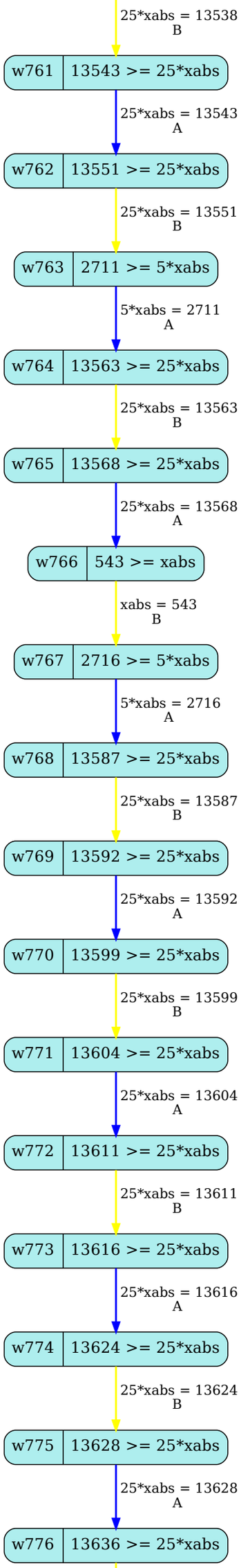
25*xabs = 13538
B
w761
13543 >= 25*xabs
25*xabs = 13543
A
w762
13551 >= 25*xabs
25*xabs = 13551
B
w763
2711 >= 5*xabs
5*xabs = 2711
A
w764
13563 >= 25*xabs
25*xabs = 13563
B
w765
13568 >= 25*xabs
25*xabs = 13568
A
w766
543 >= xabs
xabs = 543
B
w767
2716 >= 5*xabs
5*xabs = 2716
A
w768
13587 >= 25*xabs
25*xabs = 13587
B
w769
13592 >= 25*xabs
25*xabs = 13592
A
w770
13599 >= 25*xabs
25*xabs = 13599
B
w771
13604 >= 25*xabs
25*xabs = 13604
A
w772
13611 >= 25*xabs
25*xabs = 13611
B
w773
13616 >= 25*xabs
25*xabs = 13616
A
w774
13624 >= 25*xabs
25*xabs = 13624
B
w775
13628 >= 25*xabs
25*xabs = 13628
A
w776
13636 >= 25*xabs

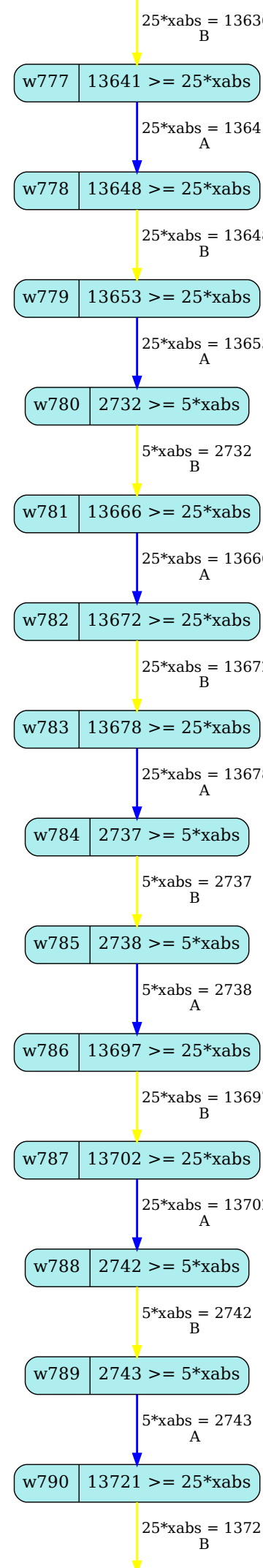
25*xabs = 13636
B
w777
13641 >= 25*xabs
25*xabs = 13641
A
w778
13648 >= 25*xabs
25*xabs = 13648
B
w779
13653 >= 25*xabs
25*xabs = 13653
A
w780
2732 >= 5*xabs
5*xabs = 2732
B
w781
13666 >= 25*xabs
25*xabs = 13666
A
w782
13672 >= 25*xabs
25*xabs = 13672
B
w783
13678 >= 25*xabs
25*xabs = 13678
A
w784
2737 >= 5*xabs
5*xabs = 2737
B
w785
2738 >= 5*xabs
5*xabs = 2738
A
w786
13697 >= 25*xabs
25*xabs = 13697
B
w787
13702 >= 25*xabs
25*xabs = 13702
A
w788
2742 >= 5*xabs
5*xabs = 2742
B
w789
2743 >= 5*xabs
5*xabs = 2743
A
w790
13721 >= 25*xabs
25*xabs = 13721
B

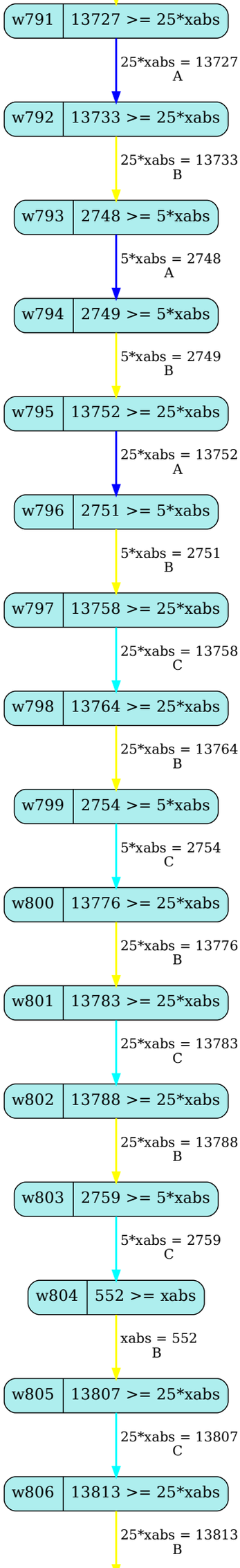
w791
13727 >= 25*xabs
25*xabs = 13727
A
w792
13733 >= 25*xabs
25*xabs = 13733
B
w793
2748 >= 5*xabs
5*xabs = 2748
A
w794
2749 >= 5*xabs
5*xabs = 2749
B
w795
13752 >= 25*xabs
25*xabs = 13752
A
w796
2751 >= 5*xabs
5*xabs = 2751
B
w797
13758 >= 25*xabs
25*xabs = 13758
C
w798
13764 >= 25*xabs
25*xabs = 13764
B
w799
2754 >= 5*xabs
5*xabs = 2754
C
w800
13776 >= 25*xabs
25*xabs = 13776
B
w801
13783 >= 25*xabs
25*xabs = 13783
C
w802
13788 >= 25*xabs
25*xabs = 13788
B
w803
2759 >= 5*xabs
5*xabs = 2759
C
w804
552 >= xabs
xabs = 552
B
w805
13807 >= 25*xabs
25*xabs = 13807
C
w806
13813 >= 25*xabs
25*xabs = 13813
B

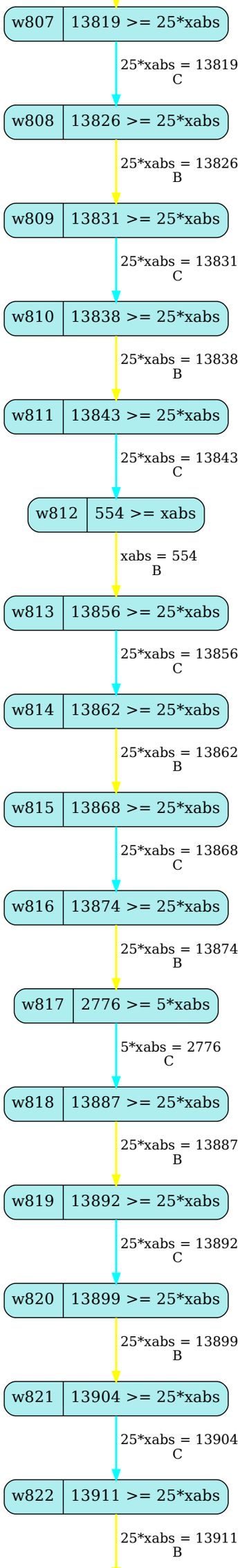
w807
13819 >= 25*xabs
25*xabs = 13819
C
w808
13826 >= 25*xabs
25*xabs = 13826
B
w809
13831 >= 25*xabs
25*xabs = 13831
C
w810
13838 >= 25*xabs
25*xabs = 13838
B
w811
13843 >= 25*xabs
25*xabs = 13843
C
w812
554 >= xabs
xabs = 554
B
w813
13856 >= 25*xabs
25*xabs = 13856
C
w814
13862 >= 25*xabs
25*xabs = 13862
B
w815
13868 >= 25*xabs
25*xabs = 13868
C
w816
13874 >= 25*xabs
25*xabs = 13874
B
w817
2776 >= 5*xabs
5*xabs = 2776
C
w818
13887 >= 25*xabs
25*xabs = 13887
B
w819
13892 >= 25*xabs
25*xabs = 13892
C
w820
13899 >= 25*xabs
25*xabs = 13899
B
w821
13904 >= 25*xabs
25*xabs = 13904
C
w822
13911 >= 25*xabs
25*xabs = 13911
B

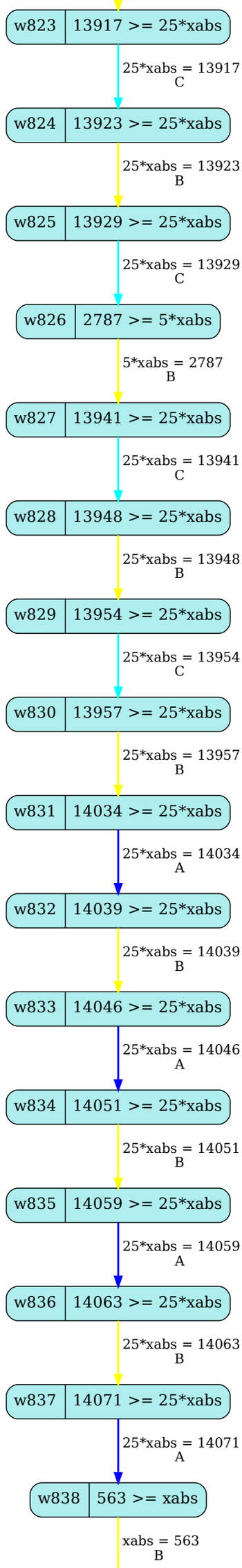
w823
13917 >= 25*xabs
25*xabs = 13917
C
w824
13923 >= 25*xabs
25*xabs = 13923
B
w825
13929 >= 25*xabs
25*xabs = 13929
C
w826
2787 >= 5*xabs
5*xabs = 2787
B
w827
13941 >= 25*xabs
25*xabs = 13941
C
w828
13948 >= 25*xabs
25*xabs = 13948
B
w829
13954 >= 25*xabs
25*xabs = 13954
C
w830
13957 >= 25*xabs
25*xabs = 13957
B
w831
14034 >= 25*xabs
25*xabs = 14034
A
w832
14039 >= 25*xabs
25*xabs = 14039
B
w833
14046 >= 25*xabs
25*xabs = 14046
A
w834
14051 >= 25*xabs
25*xabs = 14051
B
w835
14059 >= 25*xabs
25*xabs = 14059
A
w836
14063 >= 25*xabs
25*xabs = 14063
B
w837
14071 >= 25*xabs
25*xabs = 14071
A
w838
563 >= xabs
xabs = 563
B

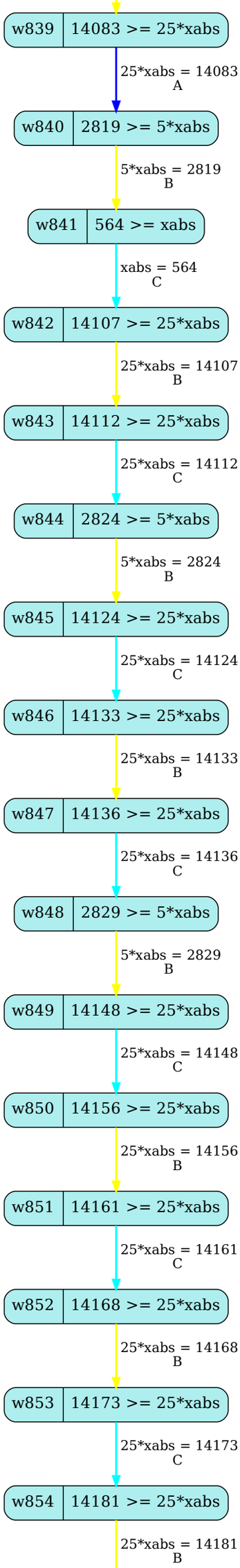
w839
14083 >= 25*xabs
25*xabs = 14083
A
w840
2819 >= 5*xabs
5*xabs = 2819
B
w841
564 >= xabs
xabs = 564
C
w842
14107 >= 25*xabs
25*xabs = 14107
B
w843
14112 >= 25*xabs
25*xabs = 14112
C
w844
2824 >= 5*xabs
5*xabs = 2824
B
w845
14124 >= 25*xabs
25*xabs = 14124
C
w846
14133 >= 25*xabs
25*xabs = 14133
B
w847
14136 >= 25*xabs
25*xabs = 14136
C
w848
2829 >= 5*xabs
5*xabs = 2829
B
w849
14148 >= 25*xabs
25*xabs = 14148
C
w850
14156 >= 25*xabs
25*xabs = 14156
B
w851
14161 >= 25*xabs
25*xabs = 14161
C
w852
14168 >= 25*xabs
25*xabs = 14168
B
w853
14173 >= 25*xabs
25*xabs = 14173
C
w854
14181 >= 25*xabs
25*xabs = 14181
B

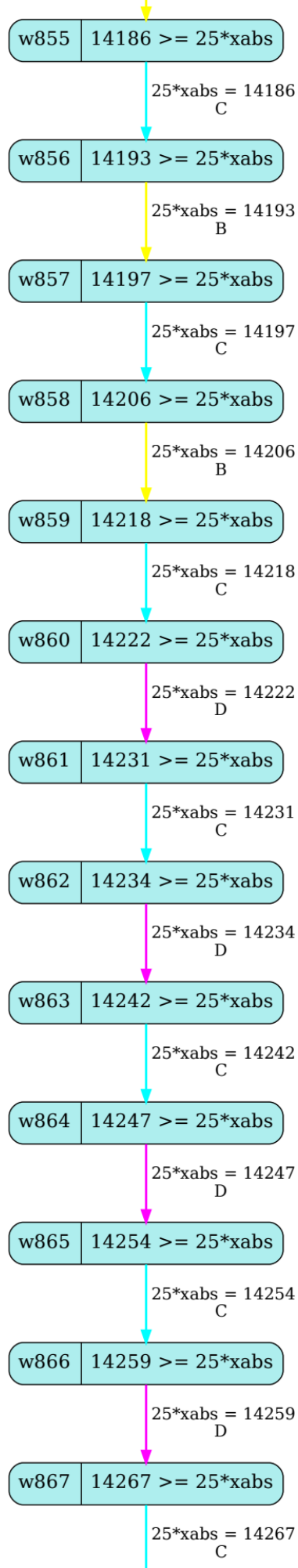
w855
14186 >= 25*xabs
25*xabs = 14186
C
w856
14193 >= 25*xabs
25*xabs = 14193
B
w857
14197 >= 25*xabs
25*xabs = 14197
C
w858
14206 >= 25*xabs
25*xabs = 14206
B
w859
14218 >= 25*xabs
25*xabs = 14218
C
w860
14222 >= 25*xabs
25*xabs = 14222
D
w861
14231 >= 25*xabs
25*xabs = 14231
C
w862
14234 >= 25*xabs
25*xabs = 14234
D
w863
14242 >= 25*xabs
25*xabs = 14242
C
w864
14247 >= 25*xabs
25*xabs = 14247
D
w865
14254 >= 25*xabs
25*xabs = 14254
C
w866
14259 >= 25*xabs
25*xabs = 14259
D
w867
14267 >= 25*xabs
25*xabs = 14267
C

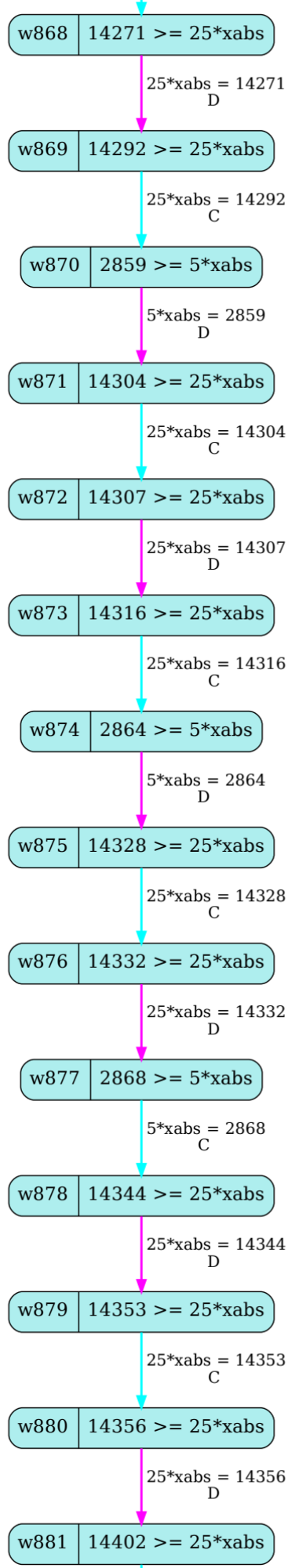
w868
14271 >= 25*xabs
25*xabs = 14271
D
w869
14292 >= 25*xabs
25*xabs = 14292
C
w870
2859 >= 5*xabs
5*xabs = 2859
D
w871
14304 >= 25*xabs
25*xabs = 14304
C
w872
14307 >= 25*xabs
25*xabs = 14307
D
w873
14316 >= 25*xabs
25*xabs = 14316
C
w874
2864 >= 5*xabs
5*xabs = 2864
D
w875
14328 >= 25*xabs
25*xabs = 14328
C
w876
14332 >= 25*xabs
25*xabs = 14332
D
w877
2868 >= 5*xabs
5*xabs = 2868
C
w878
14344 >= 25*xabs
25*xabs = 14344
D
w879
14353 >= 25*xabs
25*xabs = 14353
C
w880
14356 >= 25*xabs
25*xabs = 14356
D
w881
14402 >= 25*xabs

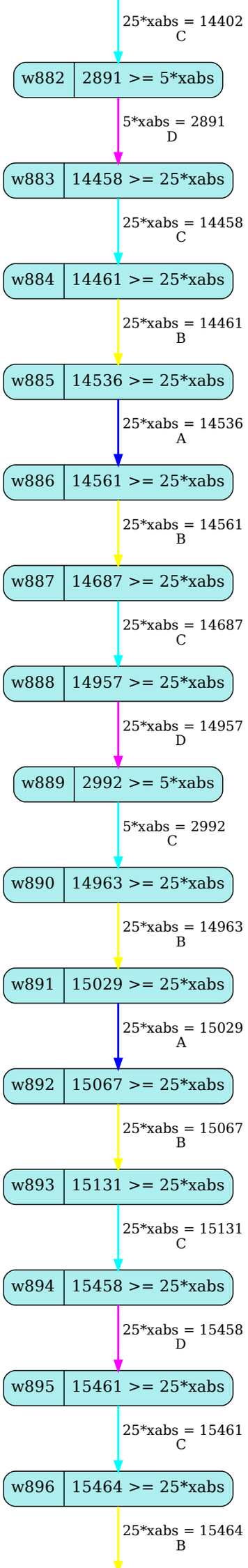
25*xabs = 14402
C
w882
2891 >= 5*xabs
5*xabs = 2891
D
w883
14458 >= 25*xabs
25*xabs = 14458
C
w884
14461 >= 25*xabs
25*xabs = 14461
B
w885
14536 >= 25*xabs
25*xabs = 14536
A
w886
14561 >= 25*xabs
25*xabs = 14561
B
w887
14687 >= 25*xabs
25*xabs = 14687
C
w888
14957 >= 25*xabs
25*xabs = 14957
D
w889
2992 >= 5*xabs
5*xabs = 2992
C
w890
14963 >= 25*xabs
25*xabs = 14963
B
w891
15029 >= 25*xabs
25*xabs = 15029
A
w892
15067 >= 25*xabs
25*xabs = 15067
B
w893
15131 >= 25*xabs
25*xabs = 15131
C
w894
15458 >= 25*xabs
25*xabs = 15458
D
w895
15461 >= 25*xabs
25*xabs = 15461
C
w896
15464 >= 25*xabs
25*xabs = 15464
B

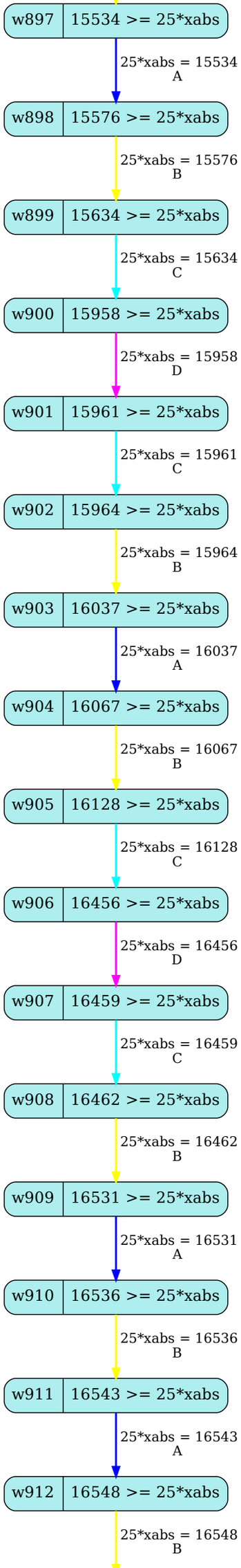
w897
15534 >= 25*xabs
25*xabs = 15534
A
w898
15576 >= 25*xabs
25*xabs = 15576
B
w899
15634 >= 25*xabs
25*xabs = 15634
C
w900
15958 >= 25*xabs
25*xabs = 15958
D
w901
15961 >= 25*xabs
25*xabs = 15961
C
w902
15964 >= 25*xabs
25*xabs = 15964
B
w903
16037 >= 25*xabs
25*xabs = 16037
A
w904
16067 >= 25*xabs
25*xabs = 16067
B
w905
16128 >= 25*xabs
25*xabs = 16128
C
w906
16456 >= 25*xabs
25*xabs = 16456
D
w907
16459 >= 25*xabs
25*xabs = 16459
C
w908
16462 >= 25*xabs
25*xabs = 16462
B
w909
16531 >= 25*xabs
25*xabs = 16531
A
w910
16536 >= 25*xabs
25*xabs = 16536
B
w911
16543 >= 25*xabs
25*xabs = 16543
A
w912
16548 >= 25*xabs
25*xabs = 16548
B

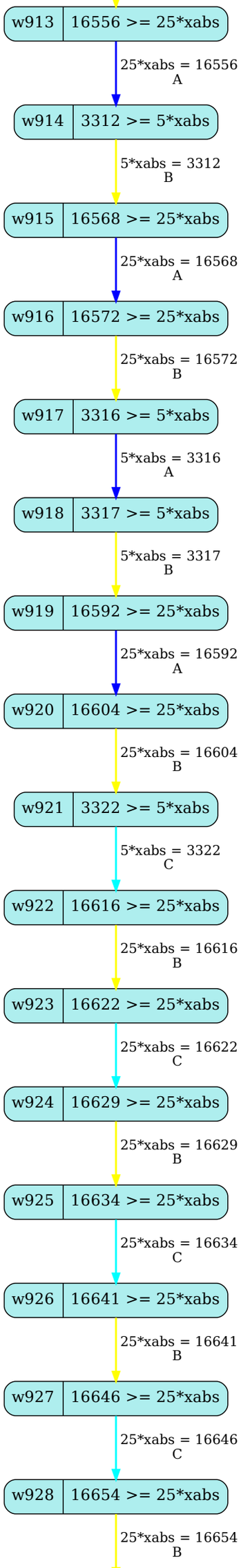
w913
16556 >= 25*xabs
25*xabs = 16556
A
w914
3312 >= 5*xabs
5*xabs = 3312
B
w915
16568 >= 25*xabs
25*xabs = 16568
A
w916
16572 >= 25*xabs
25*xabs = 16572
B
w917
3316 >= 5*xabs
5*xabs = 3316
A
w918
3317 >= 5*xabs
5*xabs = 3317
B
w919
16592 >= 25*xabs
25*xabs = 16592
A
w920
16604 >= 25*xabs
25*xabs = 16604
B
w921
3322 >= 5*xabs
5*xabs = 3322
C
w922
16616 >= 25*xabs
25*xabs = 16616
B
w923
16622 >= 25*xabs
25*xabs = 16622
C
w924
16629 >= 25*xabs
25*xabs = 16629
B
w925
16634 >= 25*xabs
25*xabs = 16634
C
w926
16641 >= 25*xabs
25*xabs = 16641
B
w927
16646 >= 25*xabs
25*xabs = 16646
C
w928
16654 >= 25*xabs
25*xabs = 16654
B

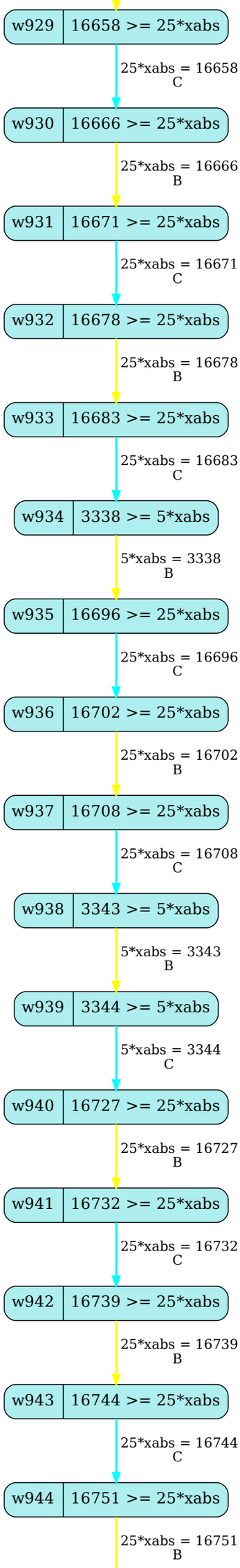
w929
16658 >= 25*xabs
25*xabs = 16658
C
w930
16666 >= 25*xabs
25*xabs = 16666
B
w931
16671 >= 25*xabs
25*xabs = 16671
C
w932
16678 >= 25*xabs
25*xabs = 16678
B
w933
16683 >= 25*xabs
25*xabs = 16683
C
w934
3338 >= 5*xabs
5*xabs = 3338
B
w935
16696 >= 25*xabs
25*xabs = 16696
C
w936
16702 >= 25*xabs
25*xabs = 16702
B
w937
16708 >= 25*xabs
25*xabs = 16708
C
w938
3343 >= 5*xabs
5*xabs = 3343
B
w939
3344 >= 5*xabs
5*xabs = 3344
C
w940
16727 >= 25*xabs
25*xabs = 16727
B
w941
16732 >= 25*xabs
25*xabs = 16732
C
w942
16739 >= 25*xabs
25*xabs = 16739
B
w943
16744 >= 25*xabs
25*xabs = 16744
C
w944
16751 >= 25*xabs
25*xabs = 16751
B

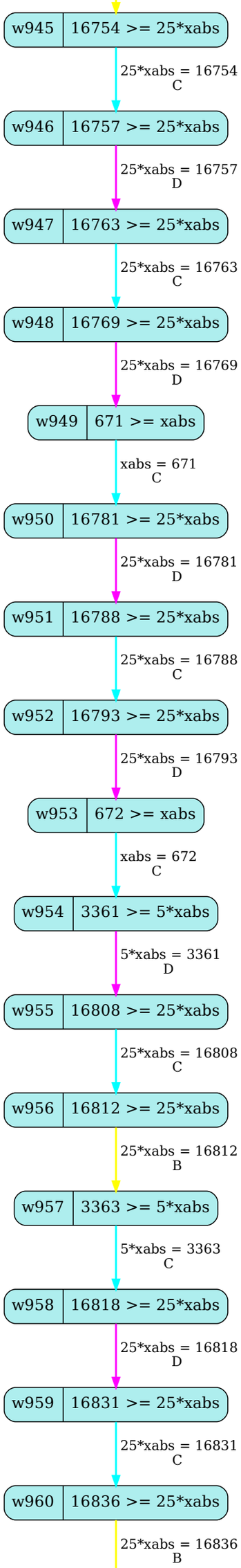
w945
16754 >= 25*xabs
25*xabs = 16754
C
w946
16757 >= 25*xabs
25*xabs = 16757
D
w947
16763 >= 25*xabs
25*xabs = 16763
C
w948
16769 >= 25*xabs
25*xabs = 16769
D
w949
671 >= xabs
xabs = 671
C
w950
16781 >= 25*xabs
25*xabs = 16781
D
w951
16788 >= 25*xabs
25*xabs = 16788
C
w952
16793 >= 25*xabs
25*xabs = 16793
D
w953
672 >= xabs
xabs = 672
C
w954
3361 >= 5*xabs
5*xabs = 3361
D
w955
16808 >= 25*xabs
25*xabs = 16808
C
w956
16812 >= 25*xabs
25*xabs = 16812
B
w957
3363 >= 5*xabs
5*xabs = 3363
C
w958
16818 >= 25*xabs
25*xabs = 16818
D
w959
16831 >= 25*xabs
25*xabs = 16831
C
w960
16836 >= 25*xabs
25*xabs = 16836
B

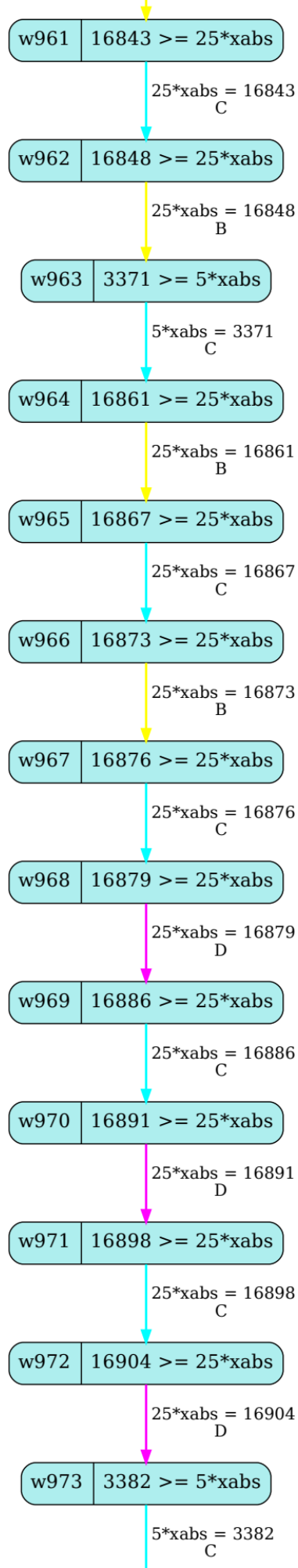
w961
16843 >= 25*xabs
25*xabs = 16843
C
w962
16848 >= 25*xabs
25*xabs = 16848
B
w963
3371 >= 5*xabs
5*xabs = 3371
C
w964
16861 >= 25*xabs
25*xabs = 16861
B
w965
16867 >= 25*xabs
25*xabs = 16867
C
w966
16873 >= 25*xabs
25*xabs = 16873
B
w967
16876 >= 25*xabs
25*xabs = 16876
C
w968
16879 >= 25*xabs
25*xabs = 16879
D
w969
16886 >= 25*xabs
25*xabs = 16886
C
w970
16891 >= 25*xabs
25*xabs = 16891
D
w971
16898 >= 25*xabs
25*xabs = 16898
C
w972
16904 >= 25*xabs
25*xabs = 16904
D
w973
3382 >= 5*xabs
5*xabs = 3382
C

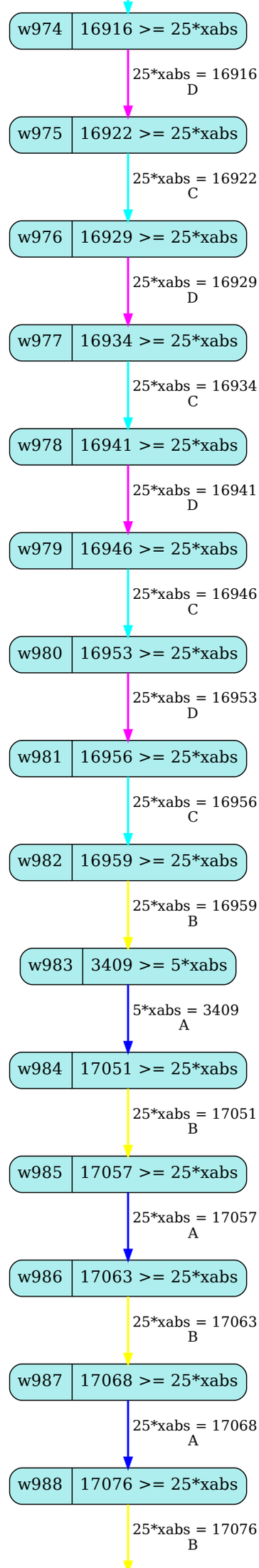
w974
16916 >= 25*xabs
25*xabs = 16916
D
w975
16922 >= 25*xabs
25*xabs = 16922
C
w976
16929 >= 25*xabs
25*xabs = 16929
D
w977
16934 >= 25*xabs
25*xabs = 16934
C
w978
16941 >= 25*xabs
25*xabs = 16941
D
w979
16946 >= 25*xabs
25*xabs = 16946
C
w980
16953 >= 25*xabs
25*xabs = 16953
D
w981
16956 >= 25*xabs
25*xabs = 16956
C
w982
16959 >= 25*xabs
25*xabs = 16959
B
w983
3409 >= 5*xabs
5*xabs = 3409
A
w984
17051 >= 25*xabs
25*xabs = 17051
B
w985
17057 >= 25*xabs
25*xabs = 17057
A
w986
17063 >= 25*xabs
25*xabs = 17063
B
w987
17068 >= 25*xabs
25*xabs = 17068
A
w988
17076 >= 25*xabs
25*xabs = 17076
B

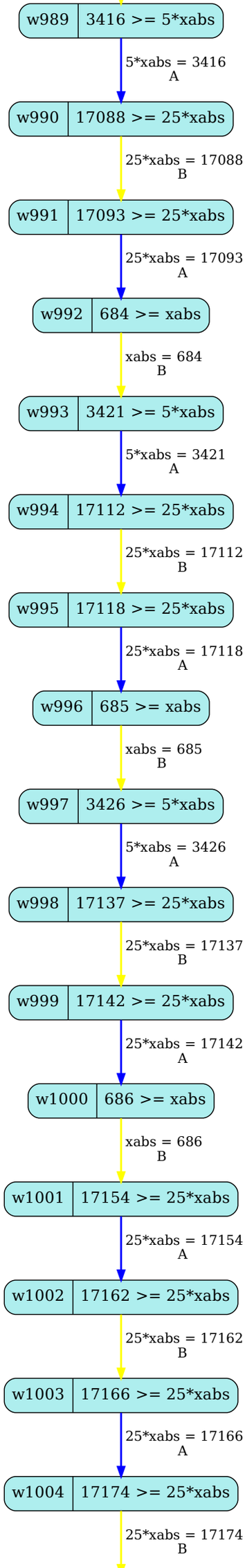
w989
3416 >= 5*xabs
5*xabs = 3416
A
w990
17088 >= 25*xabs
25*xabs = 17088
B
w991
17093 >= 25*xabs
25*xabs = 17093
A
w992
684 >= xabs
xabs = 684
B
w993
3421 >= 5*xabs
5*xabs = 3421
A
w994
17112 >= 25*xabs
25*xabs = 17112
B
w995
17118 >= 25*xabs
25*xabs = 17118
A
w996
685 >= xabs
xabs = 685
B
w997
3426 >= 5*xabs
5*xabs = 3426
A
w998
17137 >= 25*xabs
25*xabs = 17137
B
w999
17142 >= 25*xabs
25*xabs = 17142
A
w1000
686 >= xabs
xabs = 686
B
w1001
17154 >= 25*xabs
25*xabs = 17154
A
w1002
17162 >= 25*xabs
25*xabs = 17162
B
w1003
17166 >= 25*xabs
25*xabs = 17166
A
w1004
17174 >= 25*xabs
25*xabs = 17174
B

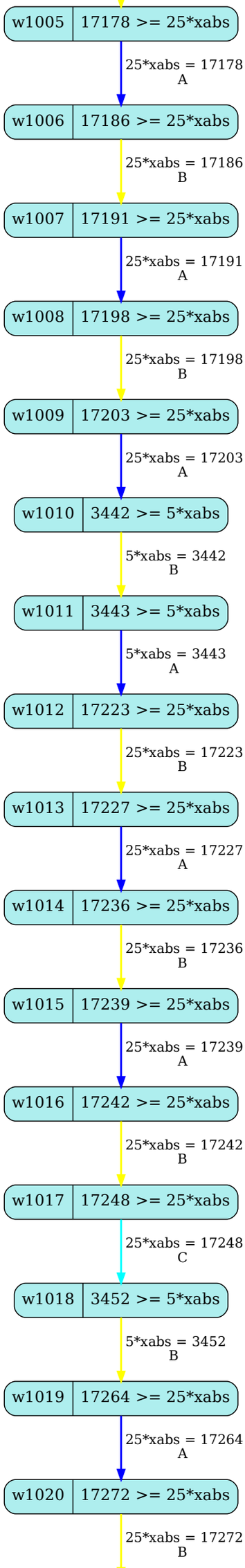
w1005
17178 >= 25*xabs
25*xabs = 17178
A
w1006
17186 >= 25*xabs
25*xabs = 17186
B
w1007
17191 >= 25*xabs
25*xabs = 17191
A
w1008
17198 >= 25*xabs
25*xabs = 17198
B
w1009
17203 >= 25*xabs
25*xabs = 17203
A
w1010
3442 >= 5*xabs
5*xabs = 3442
B
w1011
3443 >= 5*xabs
5*xabs = 3443
A
w1012
17223 >= 25*xabs
25*xabs = 17223
B
w1013
17227 >= 25*xabs
25*xabs = 17227
A
w1014
17236 >= 25*xabs
25*xabs = 17236
B
w1015
17239 >= 25*xabs
25*xabs = 17239
A
w1016
17242 >= 25*xabs
25*xabs = 17242
B
w1017
17248 >= 25*xabs
25*xabs = 17248
C
w1018
3452 >= 5*xabs
5*xabs = 3452
B
w1019
17264 >= 25*xabs
25*xabs = 17264
A
w1020
17272 >= 25*xabs
25*xabs = 17272
B

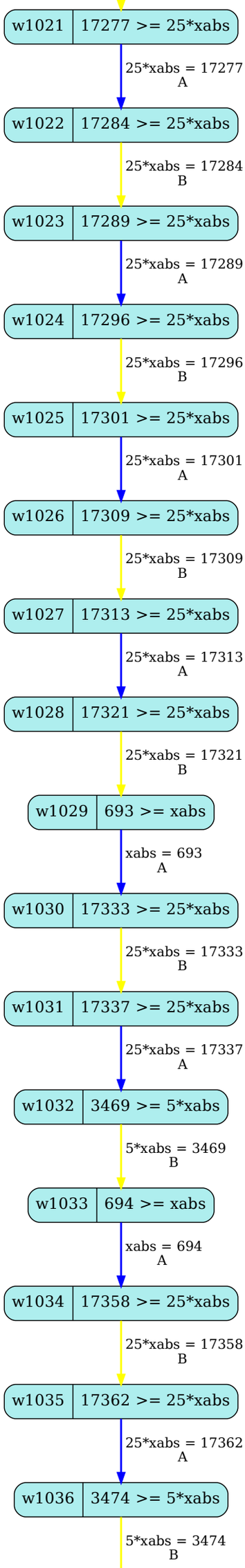
w1021
17277 >= 25*xabs
25*xabs = 17277
A
w1022
17284 >= 25*xabs
25*xabs = 17284
B
w1023
17289 >= 25*xabs
25*xabs = 17289
A
w1024
17296 >= 25*xabs
25*xabs = 17296
B
w1025
17301 >= 25*xabs
25*xabs = 17301
A
w1026
17309 >= 25*xabs
25*xabs = 17309
B
w1027
17313 >= 25*xabs
25*xabs = 17313
A
w1028
17321 >= 25*xabs
25*xabs = 17321
B
w1029
693 >= xabs
xabs = 693
A
w1030
17333 >= 25*xabs
25*xabs = 17333
B
w1031
17337 >= 25*xabs
25*xabs = 17337
A
w1032
3469 >= 5*xabs
5*xabs = 3469
B
w1033
694 >= xabs
xabs = 694
A
w1034
17358 >= 25*xabs
25*xabs = 17358
B
w1035
17362 >= 25*xabs
25*xabs = 17362
A
w1036
3474 >= 5*xabs
5*xabs = 3474
B

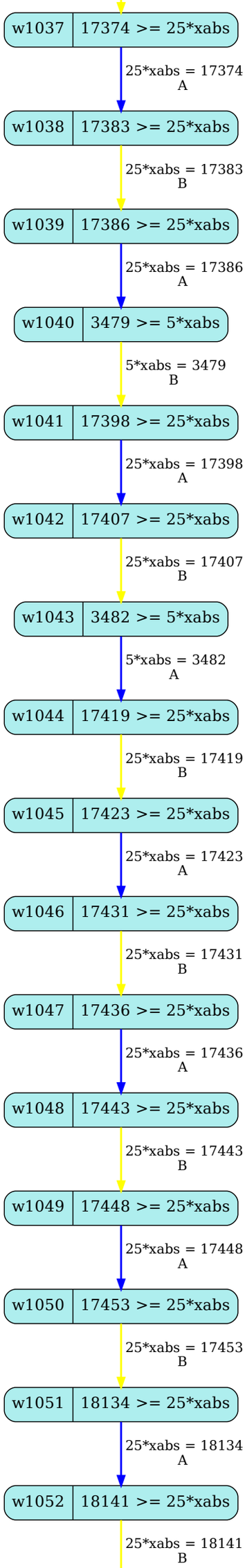
w1037
17374 >= 25*xabs
25*xabs = 17374
A
w1038
17383 >= 25*xabs
25*xabs = 17383
B
w1039
17386 >= 25*xabs
25*xabs = 17386
A
w1040
3479 >= 5*xabs
5*xabs = 3479
B
w1041
17398 >= 25*xabs
25*xabs = 17398
A
w1042
17407 >= 25*xabs
25*xabs = 17407
B
w1043
3482 >= 5*xabs
5*xabs = 3482
A
w1044
17419 >= 25*xabs
25*xabs = 17419
B
w1045
17423 >= 25*xabs
25*xabs = 17423
A
w1046
17431 >= 25*xabs
25*xabs = 17431
B
w1047
17436 >= 25*xabs
25*xabs = 17436
A
w1048
17443 >= 25*xabs
25*xabs = 17443
B
w1049
17448 >= 25*xabs
25*xabs = 17448
A
w1050
17453 >= 25*xabs
25*xabs = 17453
B
w1051
18134 >= 25*xabs
25*xabs = 18134
A
w1052
18141 >= 25*xabs
25*xabs = 18141
B

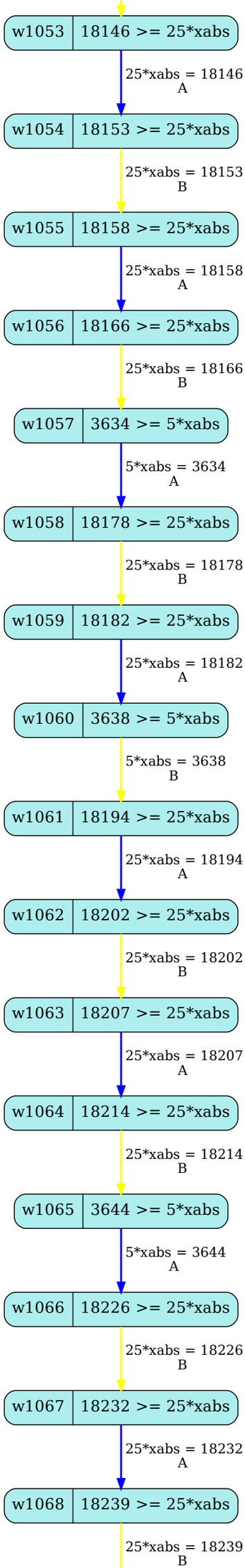
w1053
18146 >= 25*xabs
25*xabs = 18146
A
w1054
18153 >= 25*xabs
25*xabs = 18153
B
w1055
18158 >= 25*xabs
25*xabs = 18158
A
w1056
18166 >= 25*xabs
25*xabs = 18166
B
w1057
3634 >= 5*xabs
5*xabs = 3634
A
w1058
18178 >= 25*xabs
25*xabs = 18178
B
w1059
18182 >= 25*xabs
25*xabs = 18182
A
w1060
3638 >= 5*xabs
5*xabs = 3638
B
w1061
18194 >= 25*xabs
25*xabs = 18194
A
w1062
18202 >= 25*xabs
25*xabs = 18202
B
w1063
18207 >= 25*xabs
25*xabs = 18207
A
w1064
18214 >= 25*xabs
25*xabs = 18214
B
w1065
3644 >= 5*xabs
5*xabs = 3644
A
w1066
18226 >= 25*xabs
25*xabs = 18226
B
w1067
18232 >= 25*xabs
25*xabs = 18232
A
w1068
18239 >= 25*xabs
25*xabs = 18239
B

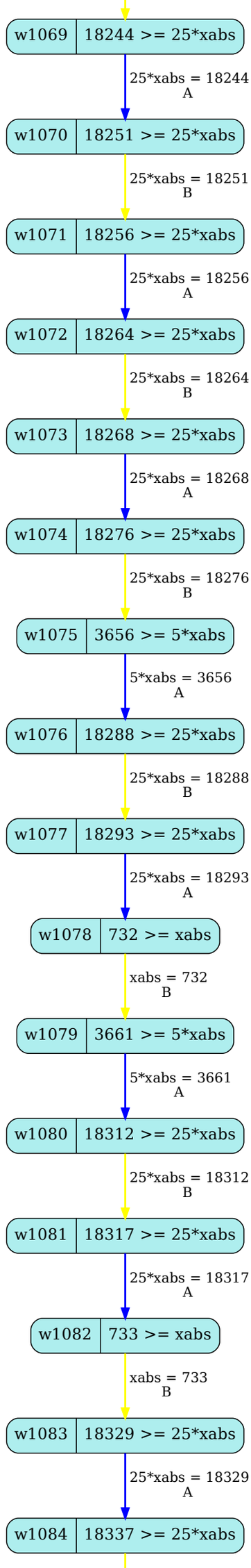
w1069
18244 >= 25*xabs
25*xabs = 18244
A
w1070
18251 >= 25*xabs
25*xabs = 18251
B
w1071
18256 >= 25*xabs
25*xabs = 18256
A
w1072
18264 >= 25*xabs
25*xabs = 18264
B
w1073
18268 >= 25*xabs
25*xabs = 18268
A
w1074
18276 >= 25*xabs
25*xabs = 18276
B
w1075
3656 >= 5*xabs
5*xabs = 3656
A
w1076
18288 >= 25*xabs
25*xabs = 18288
B
w1077
18293 >= 25*xabs
25*xabs = 18293
A
w1078
732 >= xabs
xabs = 732
B
w1079
3661 >= 5*xabs
5*xabs = 3661
A
w1080
18312 >= 25*xabs
25*xabs = 18312
B
w1081
18317 >= 25*xabs
25*xabs = 18317
A
w1082
733 >= xabs
xabs = 733
B
w1083
18329 >= 25*xabs
25*xabs = 18329
A
w1084
18337 >= 25*xabs

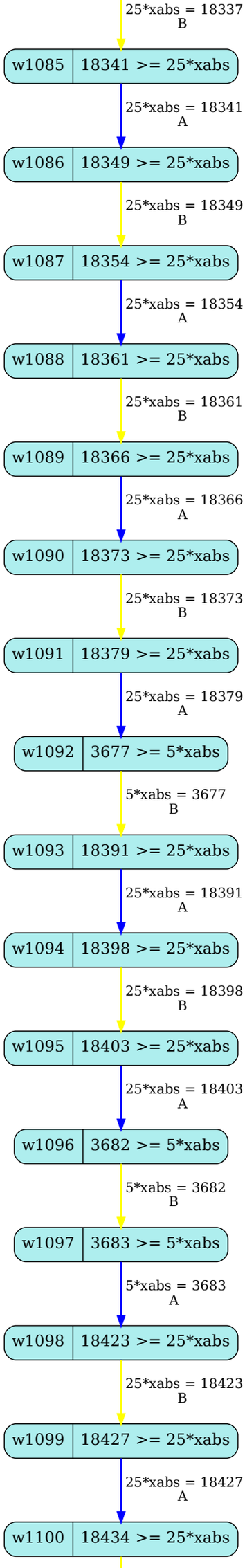
25*xabs = 18337
B
w1085
18341 >= 25*xabs
25*xabs = 18341
A
w1086
18349 >= 25*xabs
25*xabs = 18349
B
w1087
18354 >= 25*xabs
25*xabs = 18354
A
w1088
18361 >= 25*xabs
25*xabs = 18361
B
w1089
18366 >= 25*xabs
25*xabs = 18366
A
w1090
18373 >= 25*xabs
25*xabs = 18373
B
w1091
18379 >= 25*xabs
25*xabs = 18379
A
w1092
3677 >= 5*xabs
5*xabs = 3677
B
w1093
18391 >= 25*xabs
25*xabs = 18391
A
w1094
18398 >= 25*xabs
25*xabs = 18398
B
w1095
18403 >= 25*xabs
25*xabs = 18403
A
w1096
3682 >= 5*xabs
5*xabs = 3682
B
w1097
3683 >= 5*xabs
5*xabs = 3683
A
w1098
18423 >= 25*xabs
25*xabs = 18423
B
w1099
18427 >= 25*xabs
25*xabs = 18427
A
w1100
18434 >= 25*xabs

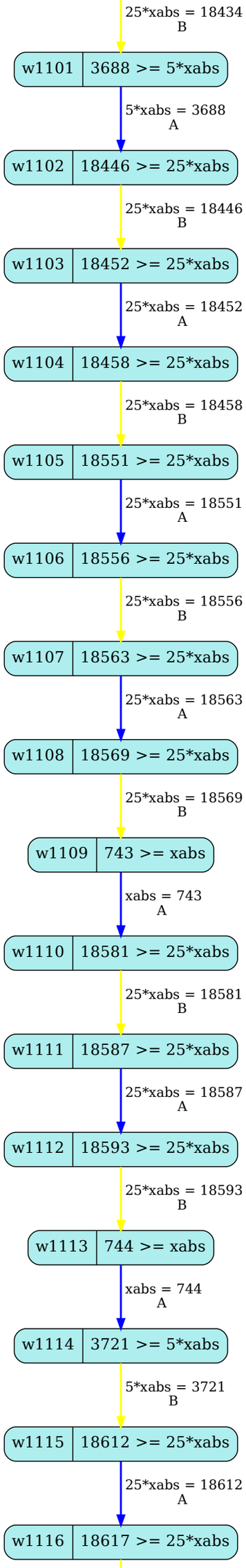
25*xabs = 18434
B
w1101
3688 >= 5*xabs
5*xabs = 3688
A
w1102
18446 >= 25*xabs
25*xabs = 18446
B
w1103
18452 >= 25*xabs
25*xabs = 18452
A
w1104
18458 >= 25*xabs
25*xabs = 18458
B
w1105
18551 >= 25*xabs
25*xabs = 18551
A
w1106
18556 >= 25*xabs
25*xabs = 18556
B
w1107
18563 >= 25*xabs
25*xabs = 18563
A
w1108
18569 >= 25*xabs
25*xabs = 18569
B
w1109
743 >= xabs
xabs = 743
A
w1110
18581 >= 25*xabs
25*xabs = 18581
B
w1111
18587 >= 25*xabs
25*xabs = 18587
A
w1112
18593 >= 25*xabs
25*xabs = 18593
B
w1113
744 >= xabs
xabs = 744
A
w1114
3721 >= 5*xabs
5*xabs = 3721
B
w1115
18612 >= 25*xabs
25*xabs = 18612
A
w1116
18617 >= 25*xabs

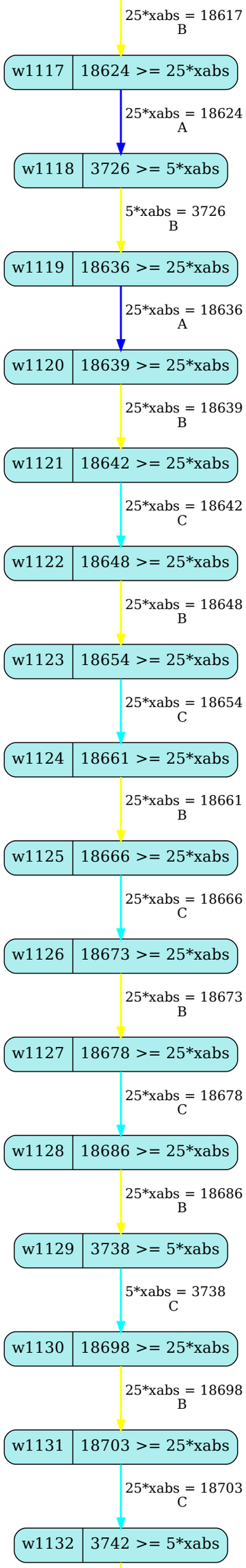
25*xabs = 18617
B
w1117
18624 >= 25*xabs
25*xabs = 18624
A
w1118
3726 >= 5*xabs
5*xabs = 3726
B
w1119
18636 >= 25*xabs
25*xabs = 18636
A
w1120
18639 >= 25*xabs
25*xabs = 18639
B
w1121
18642 >= 25*xabs
25*xabs = 18642
C
w1122
18648 >= 25*xabs
25*xabs = 18648
B
w1123
18654 >= 25*xabs
25*xabs = 18654
C
w1124
18661 >= 25*xabs
25*xabs = 18661
B
w1125
18666 >= 25*xabs
25*xabs = 18666
C
w1126
18673 >= 25*xabs
25*xabs = 18673
B
w1127
18678 >= 25*xabs
25*xabs = 18678
C
w1128
18686 >= 25*xabs
25*xabs = 18686
B
w1129
3738 >= 5*xabs
5*xabs = 3738
C
w1130
18698 >= 25*xabs
25*xabs = 18698
B
w1131
18703 >= 25*xabs
25*xabs = 18703
C
w1132
3742 >= 5*xabs

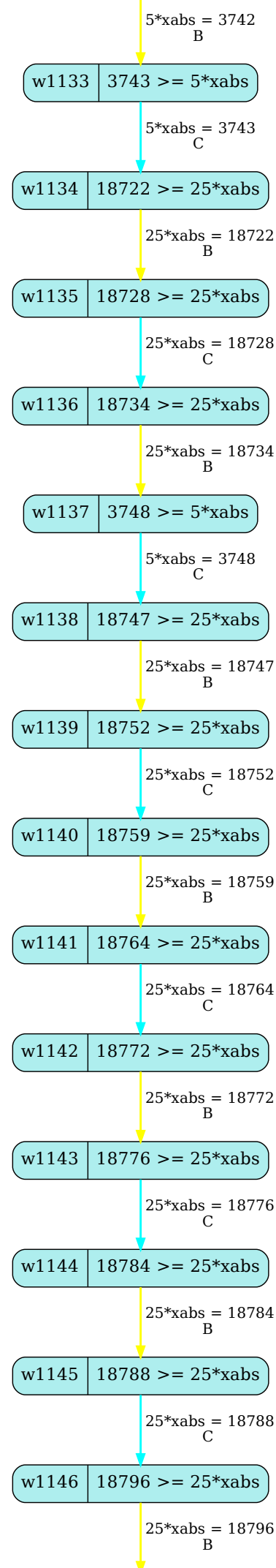
5*xabs = 3742
B
w1133
3743 >= 5*xabs
5*xabs = 3743
C
w1134
18722 >= 25*xabs
25*xabs = 18722
B
w1135
18728 >= 25*xabs
25*xabs = 18728
C
w1136
18734 >= 25*xabs
25*xabs = 18734
B
w1137
3748 >= 5*xabs
5*xabs = 3748
C
w1138
18747 >= 25*xabs
25*xabs = 18747
B
w1139
18752 >= 25*xabs
25*xabs = 18752
C
w1140
18759 >= 25*xabs
25*xabs = 18759
B
w1141
18764 >= 25*xabs
25*xabs = 18764
C
w1142
18772 >= 25*xabs
25*xabs = 18772
B
w1143
18776 >= 25*xabs
25*xabs = 18776
C
w1144
18784 >= 25*xabs
25*xabs = 18784
B
w1145
18788 >= 25*xabs
25*xabs = 18788
C
w1146
18796 >= 25*xabs
25*xabs = 18796
B

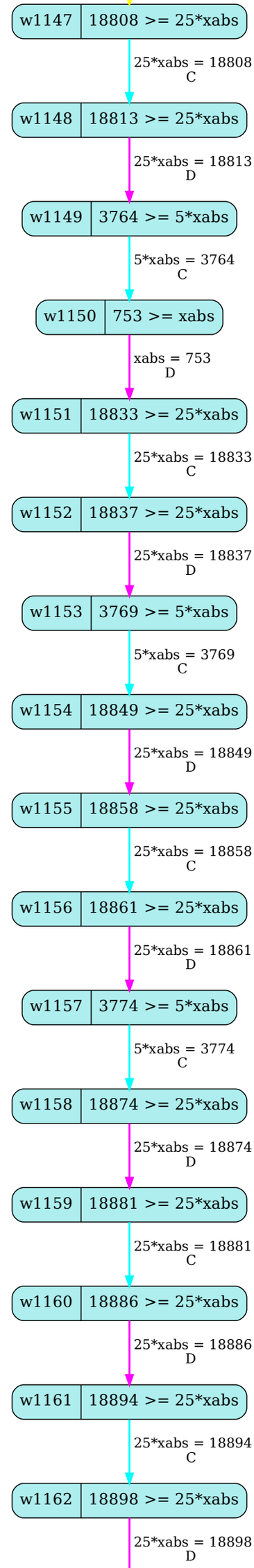
w1147
18808 >= 25*xabs
25*xabs = 18808
C
w1148
18813 >= 25*xabs
25*xabs = 18813
D
w1149
3764 >= 5*xabs
5*xabs = 3764
C
w1150
753 >= xabs
xabs = 753
D
w1151
18833 >= 25*xabs
25*xabs = 18833
C
w1152
18837 >= 25*xabs
25*xabs = 18837
D
w1153
3769 >= 5*xabs
5*xabs = 3769
C
w1154
18849 >= 25*xabs
25*xabs = 18849
D
w1155
18858 >= 25*xabs
25*xabs = 18858
C
w1156
18861 >= 25*xabs
25*xabs = 18861
D
w1157
3774 >= 5*xabs
5*xabs = 3774
C
w1158
18874 >= 25*xabs
25*xabs = 18874
D
w1159
18881 >= 25*xabs
25*xabs = 18881
C
w1160
18886 >= 25*xabs
25*xabs = 18886
D
w1161
18894 >= 25*xabs
25*xabs = 18894
C
w1162
18898 >= 25*xabs
25*xabs = 18898
D

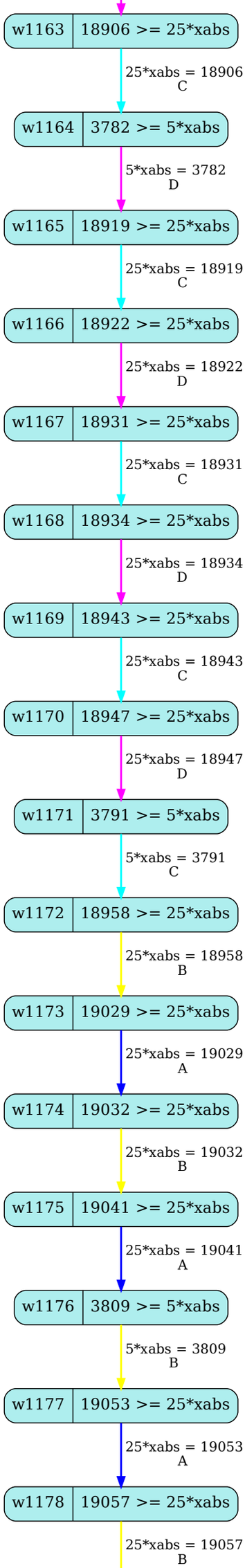
w1163
18906 >= 25*xabs
25*xabs = 18906
C
w1164
3782 >= 5*xabs
5*xabs = 3782
D
w1165
18919 >= 25*xabs
25*xabs = 18919
C
w1166
18922 >= 25*xabs
25*xabs = 18922
D
w1167
18931 >= 25*xabs
25*xabs = 18931
C
w1168
18934 >= 25*xabs
25*xabs = 18934
D
w1169
18943 >= 25*xabs
25*xabs = 18943
C
w1170
18947 >= 25*xabs
25*xabs = 18947
D
w1171
3791 >= 5*xabs
5*xabs = 3791
C
w1172
18958 >= 25*xabs
25*xabs = 18958
B
w1173
19029 >= 25*xabs
25*xabs = 19029
A
w1174
19032 >= 25*xabs
25*xabs = 19032
B
w1175
19041 >= 25*xabs
25*xabs = 19041
A
w1176
3809 >= 5*xabs
5*xabs = 3809
B
w1177
19053 >= 25*xabs
25*xabs = 19053
A
w1178
19057 >= 25*xabs
25*xabs = 19057
B

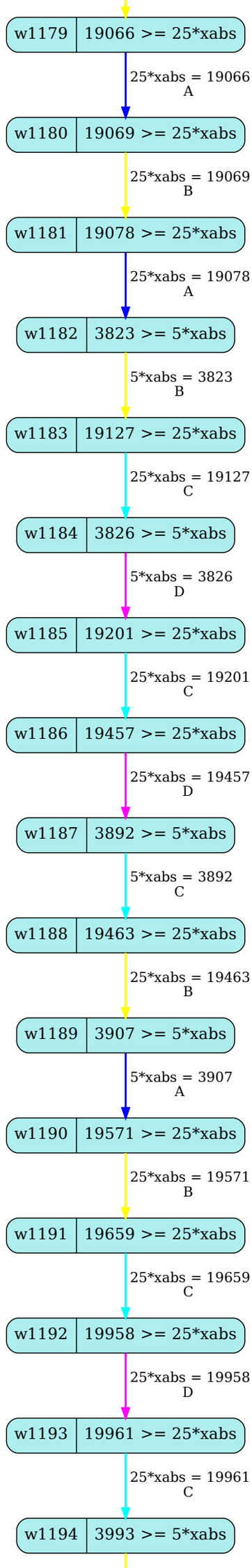
w1179
19066 >= 25*xabs
25*xabs = 19066
A
w1180
19069 >= 25*xabs
25*xabs = 19069
B
w1181
19078 >= 25*xabs
25*xabs = 19078
A
w1182
3823 >= 5*xabs
5*xabs = 3823
B
w1183
19127 >= 25*xabs
25*xabs = 19127
C
w1184
3826 >= 5*xabs
5*xabs = 3826
D
w1185
19201 >= 25*xabs
25*xabs = 19201
C
w1186
19457 >= 25*xabs
25*xabs = 19457
D
w1187
3892 >= 5*xabs
5*xabs = 3892
C
w1188
19463 >= 25*xabs
25*xabs = 19463
B
w1189
3907 >= 5*xabs
5*xabs = 3907
A
w1190
19571 >= 25*xabs
25*xabs = 19571
B
w1191
19659 >= 25*xabs
25*xabs = 19659
C
w1192
19958 >= 25*xabs
25*xabs = 19958
D
w1193
19961 >= 25*xabs
25*xabs = 19961
C
w1194
3993 >= 5*xabs

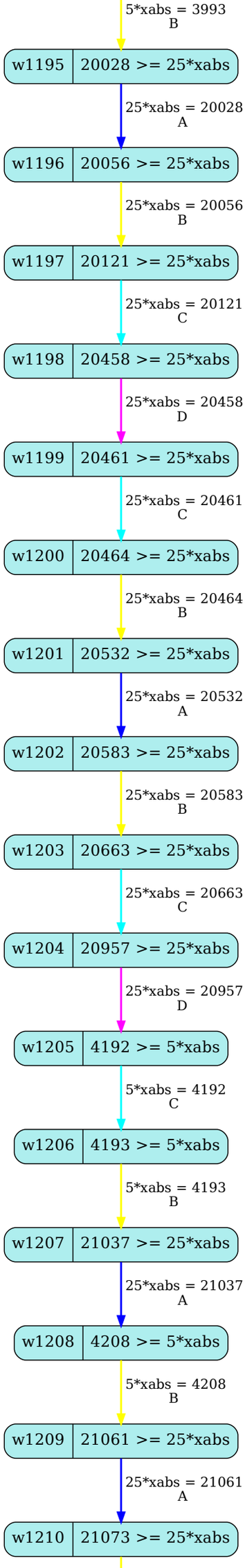
5*xabs = 3993
B
w1195
20028 >= 25*xabs
25*xabs = 20028
A
w1196
20056 >= 25*xabs
25*xabs = 20056
B
w1197
20121 >= 25*xabs
25*xabs = 20121
C
w1198
20458 >= 25*xabs
25*xabs = 20458
D
w1199
20461 >= 25*xabs
25*xabs = 20461
C
w1200
20464 >= 25*xabs
25*xabs = 20464
B
w1201
20532 >= 25*xabs
25*xabs = 20532
A
w1202
20583 >= 25*xabs
25*xabs = 20583
B
w1203
20663 >= 25*xabs
25*xabs = 20663
C
w1204
20957 >= 25*xabs
25*xabs = 20957
D
w1205
4192 >= 5*xabs
5*xabs = 4192
C
w1206
4193 >= 5*xabs
5*xabs = 4193
B
w1207
21037 >= 25*xabs
25*xabs = 21037
A
w1208
4208 >= 5*xabs
5*xabs = 4208
B
w1209
21061 >= 25*xabs
25*xabs = 21061
A
w1210
21073 >= 25*xabs

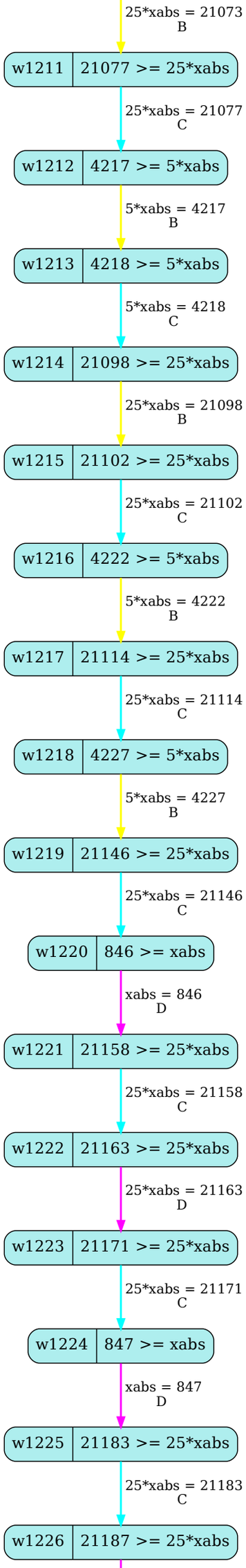
25*xabs = 21073
B
w1211
21077 >= 25*xabs
25*xabs = 21077
C
w1212
4217 >= 5*xabs
5*xabs = 4217
B
w1213
4218 >= 5*xabs
5*xabs = 4218
C
w1214
21098 >= 25*xabs
25*xabs = 21098
B
w1215
21102 >= 25*xabs
25*xabs = 21102
C
w1216
4222 >= 5*xabs
5*xabs = 4222
B
w1217
21114 >= 25*xabs
25*xabs = 21114
C
w1218
4227 >= 5*xabs
5*xabs = 4227
B
w1219
21146 >= 25*xabs
25*xabs = 21146
C
w1220
846 >= xabs
xabs = 846
D
w1221
21158 >= 25*xabs
25*xabs = 21158
C
w1222
21163 >= 25*xabs
25*xabs = 21163
D
w1223
21171 >= 25*xabs
25*xabs = 21171
C
w1224
847 >= xabs
xabs = 847
D
w1225
21183 >= 25*xabs
25*xabs = 21183
C
w1226
21187 >= 25*xabs

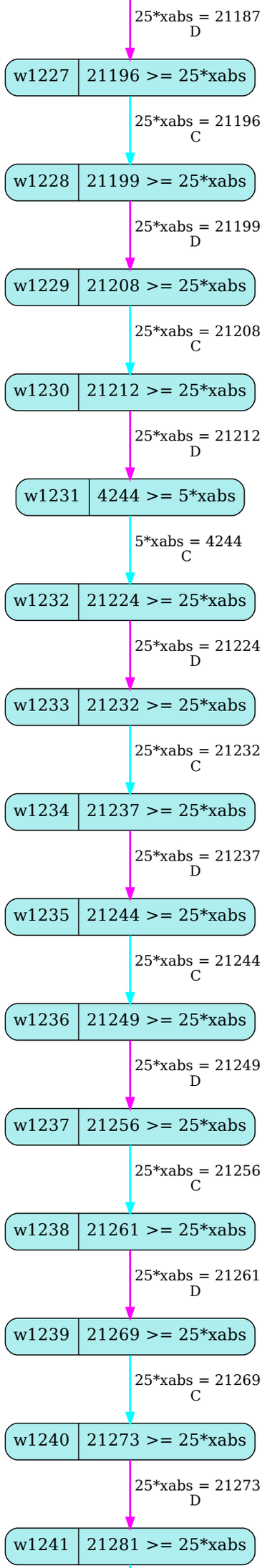
25*xabs = 21187
D
w1227
21196 >= 25*xabs
25*xabs = 21196
C
w1228
21199 >= 25*xabs
25*xabs = 21199
D
w1229
21208 >= 25*xabs
25*xabs = 21208
C
w1230
21212 >= 25*xabs
25*xabs = 21212
D
w1231
4244 >= 5*xabs
5*xabs = 4244
C
w1232
21224 >= 25*xabs
25*xabs = 21224
D
w1233
21232 >= 25*xabs
25*xabs = 21232
C
w1234
21237 >= 25*xabs
25*xabs = 21237
D
w1235
21244 >= 25*xabs
25*xabs = 21244
C
w1236
21249 >= 25*xabs
25*xabs = 21249
D
w1237
21256 >= 25*xabs
25*xabs = 21256
C
w1238
21261 >= 25*xabs
25*xabs = 21261
D
w1239
21269 >= 25*xabs
25*xabs = 21269
C
w1240
21273 >= 25*xabs
25*xabs = 21273
D
w1241
21281 >= 25*xabs

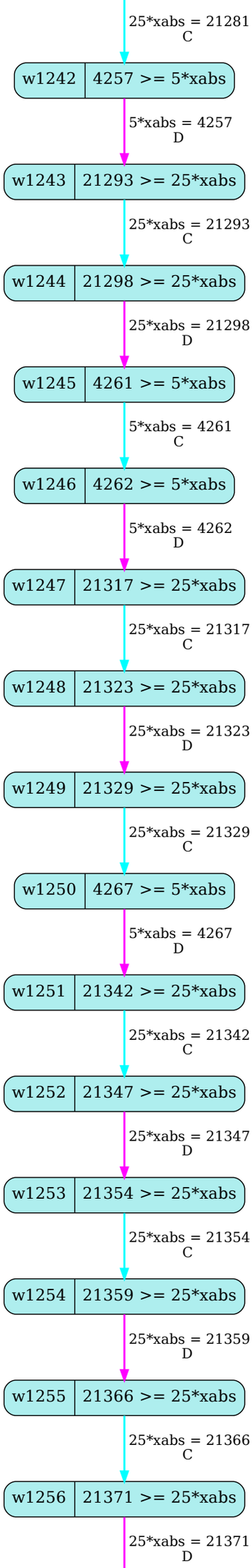
25*xabs = 21281
C
w1242
4257 >= 5*xabs
5*xabs = 4257
D
w1243
21293 >= 25*xabs
25*xabs = 21293
C
w1244
21298 >= 25*xabs
25*xabs = 21298
D
w1245
4261 >= 5*xabs
5*xabs = 4261
C
w1246
4262 >= 5*xabs
5*xabs = 4262
D
w1247
21317 >= 25*xabs
25*xabs = 21317
C
w1248
21323 >= 25*xabs
25*xabs = 21323
D
w1249
21329 >= 25*xabs
25*xabs = 21329
C
w1250
4267 >= 5*xabs
5*xabs = 4267
D
w1251
21342 >= 25*xabs
25*xabs = 21342
C
w1252
21347 >= 25*xabs
25*xabs = 21347
D
w1253
21354 >= 25*xabs
25*xabs = 21354
C
w1254
21359 >= 25*xabs
25*xabs = 21359
D
w1255
21366 >= 25*xabs
25*xabs = 21366
C
w1256
21371 >= 25*xabs
25*xabs = 21371
D

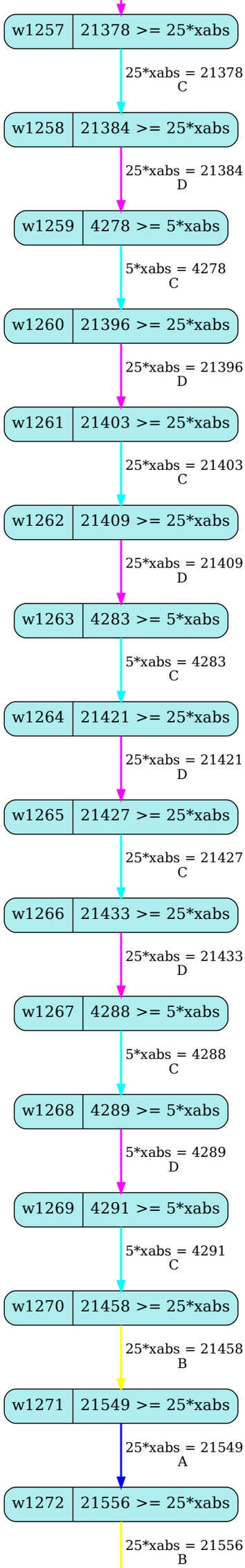
w1257
21378 >= 25*xabs
25*xabs = 21378
C
w1258
21384 >= 25*xabs
25*xabs = 21384
D
w1259
4278 >= 5*xabs
5*xabs = 4278
C
w1260
21396 >= 25*xabs
25*xabs = 21396
D
w1261
21403 >= 25*xabs
25*xabs = 21403
C
w1262
21409 >= 25*xabs
25*xabs = 21409
D
w1263
4283 >= 5*xabs
5*xabs = 4283
C
w1264
21421 >= 25*xabs
25*xabs = 21421
D
w1265
21427 >= 25*xabs
25*xabs = 21427
C
w1266
21433 >= 25*xabs
25*xabs = 21433
D
w1267
4288 >= 5*xabs
5*xabs = 4288
C
w1268
4289 >= 5*xabs
5*xabs = 4289
D
w1269
4291 >= 5*xabs
5*xabs = 4291
C
w1270
21458 >= 25*xabs
25*xabs = 21458
B
w1271
21549 >= 25*xabs
25*xabs = 21549
A
w1272
21556 >= 25*xabs
25*xabs = 21556
B

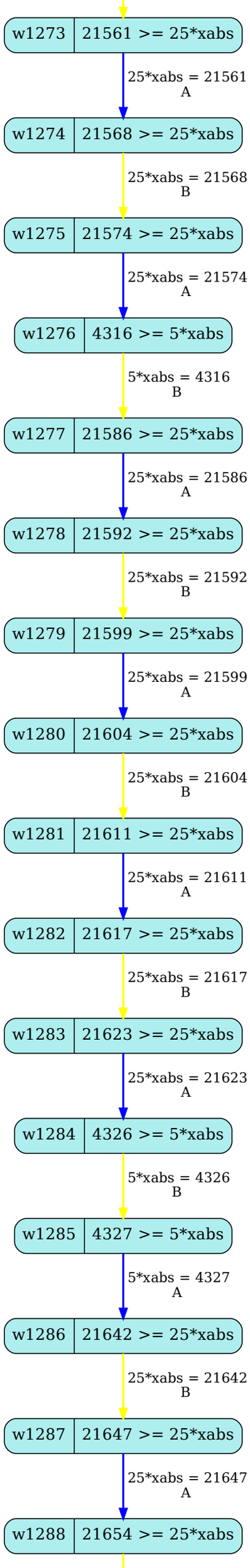
w1273
21561 >= 25*xabs
25*xabs = 21561
A
w1274
21568 >= 25*xabs
25*xabs = 21568
B
w1275
21574 >= 25*xabs
25*xabs = 21574
A
w1276
4316 >= 5*xabs
5*xabs = 4316
B
w1277
21586 >= 25*xabs
25*xabs = 21586
A
w1278
21592 >= 25*xabs
25*xabs = 21592
B
w1279
21599 >= 25*xabs
25*xabs = 21599
A
w1280
21604 >= 25*xabs
25*xabs = 21604
B
w1281
21611 >= 25*xabs
25*xabs = 21611
A
w1282
21617 >= 25*xabs
25*xabs = 21617
B
w1283
21623 >= 25*xabs
25*xabs = 21623
A
w1284
4326 >= 5*xabs
5*xabs = 4326
B
w1285
4327 >= 5*xabs
5*xabs = 4327
A
w1286
21642 >= 25*xabs
25*xabs = 21642
B
w1287
21647 >= 25*xabs
25*xabs = 21647
A
w1288
21654 >= 25*xabs

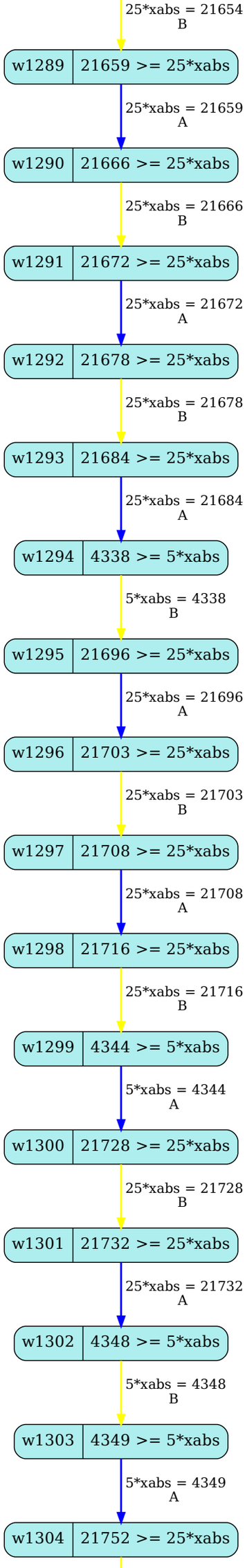
25*xabs = 21654
B
w1289
21659 >= 25*xabs
25*xabs = 21659
A
w1290
21666 >= 25*xabs
25*xabs = 21666
B
w1291
21672 >= 25*xabs
25*xabs = 21672
A
w1292
21678 >= 25*xabs
25*xabs = 21678
B
w1293
21684 >= 25*xabs
25*xabs = 21684
A
w1294
4338 >= 5*xabs
5*xabs = 4338
B
w1295
21696 >= 25*xabs
25*xabs = 21696
A
w1296
21703 >= 25*xabs
25*xabs = 21703
B
w1297
21708 >= 25*xabs
25*xabs = 21708
A
w1298
21716 >= 25*xabs
25*xabs = 21716
B
w1299
4344 >= 5*xabs
5*xabs = 4344
A
w1300
21728 >= 25*xabs
25*xabs = 21728
B
w1301
21732 >= 25*xabs
25*xabs = 21732
A
w1302
4348 >= 5*xabs
5*xabs = 4348
B
w1303
4349 >= 5*xabs
5*xabs = 4349
A
w1304
21752 >= 25*xabs

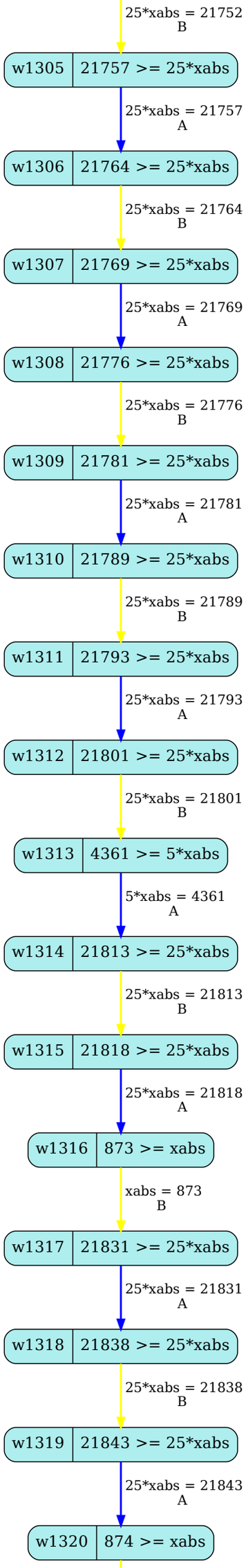
25*xabs = 21752
B
w1305
21757 >= 25*xabs
25*xabs = 21757
A
w1306
21764 >= 25*xabs
25*xabs = 21764
B
w1307
21769 >= 25*xabs
25*xabs = 21769
A
w1308
21776 >= 25*xabs
25*xabs = 21776
B
w1309
21781 >= 25*xabs
25*xabs = 21781
A
w1310
21789 >= 25*xabs
25*xabs = 21789
B
w1311
21793 >= 25*xabs
25*xabs = 21793
A
w1312
21801 >= 25*xabs
25*xabs = 21801
B
w1313
4361 >= 5*xabs
5*xabs = 4361
A
w1314
21813 >= 25*xabs
25*xabs = 21813
B
w1315
21818 >= 25*xabs
25*xabs = 21818
A
w1316
873 >= xabs
xabs = 873
B
w1317
21831 >= 25*xabs
25*xabs = 21831
A
w1318
21838 >= 25*xabs
25*xabs = 21838
B
w1319
21843 >= 25*xabs
25*xabs = 21843
A
w1320
874 >= xabs

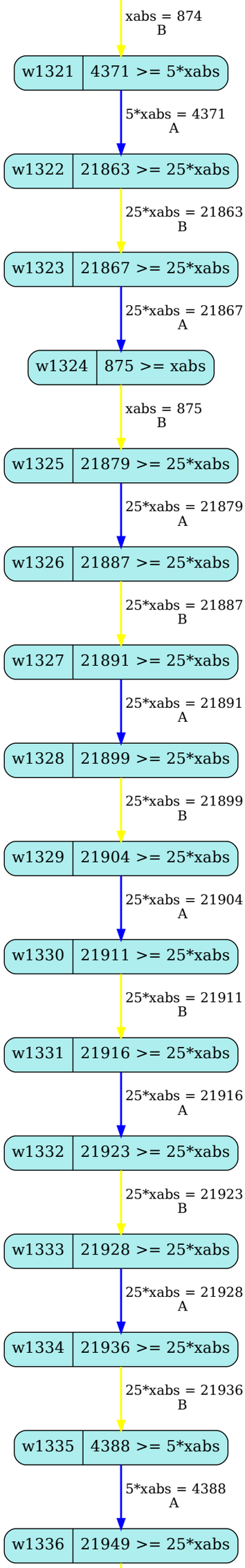
xabs = 874
B
w1321
4371 >= 5*xabs
5*xabs = 4371
A
w1322
21863 >= 25*xabs
25*xabs = 21863
B
w1323
21867 >= 25*xabs
25*xabs = 21867
A
w1324
875 >= xabs
xabs = 875
B
w1325
21879 >= 25*xabs
25*xabs = 21879
A
w1326
21887 >= 25*xabs
25*xabs = 21887
B
w1327
21891 >= 25*xabs
25*xabs = 21891
A
w1328
21899 >= 25*xabs
25*xabs = 21899
B
w1329
21904 >= 25*xabs
25*xabs = 21904
A
w1330
21911 >= 25*xabs
25*xabs = 21911
B
w1331
21916 >= 25*xabs
25*xabs = 21916
A
w1332
21923 >= 25*xabs
25*xabs = 21923
B
w1333
21928 >= 25*xabs
25*xabs = 21928
A
w1334
21936 >= 25*xabs
25*xabs = 21936
B
w1335
4388 >= 5*xabs
5*xabs = 4388
A
w1336
21949 >= 25*xabs

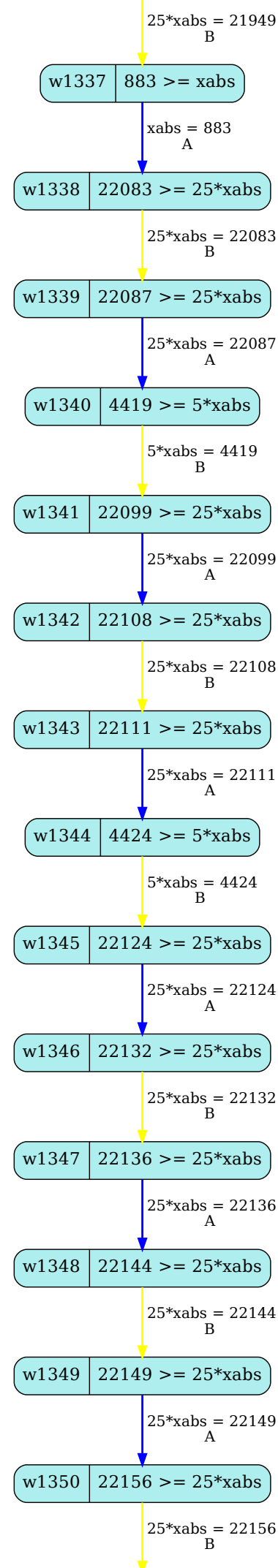
25*xabs = 21949
B
w1337
883 >= xabs
xabs = 883
A
w1338
22083 >= 25*xabs
25*xabs = 22083
B
w1339
22087 >= 25*xabs
25*xabs = 22087
A
w1340
4419 >= 5*xabs
5*xabs = 4419
B
w1341
22099 >= 25*xabs
25*xabs = 22099
A
w1342
22108 >= 25*xabs
25*xabs = 22108
B
w1343
22111 >= 25*xabs
25*xabs = 22111
A
w1344
4424 >= 5*xabs
5*xabs = 4424
B
w1345
22124 >= 25*xabs
25*xabs = 22124
A
w1346
22132 >= 25*xabs
25*xabs = 22132
B
w1347
22136 >= 25*xabs
25*xabs = 22136
A
w1348
22144 >= 25*xabs
25*xabs = 22144
B
w1349
22149 >= 25*xabs
25*xabs = 22149
A
w1350
22156 >= 25*xabs
25*xabs = 22156
B

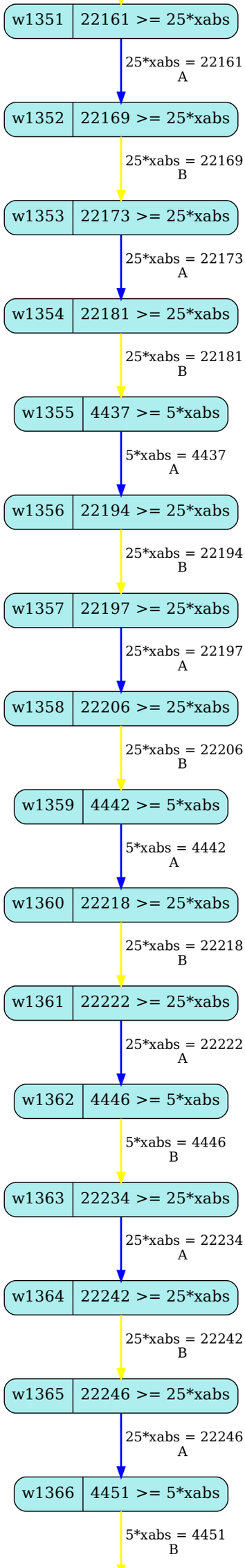
w1351
22161 >= 25*xabs
25*xabs = 22161
A
w1352
22169 >= 25*xabs
25*xabs = 22169
B
w1353
22173 >= 25*xabs
25*xabs = 22173
A
w1354
22181 >= 25*xabs
25*xabs = 22181
B
w1355
4437 >= 5*xabs
5*xabs = 4437
A
w1356
22194 >= 25*xabs
25*xabs = 22194
B
w1357
22197 >= 25*xabs
25*xabs = 22197
A
w1358
22206 >= 25*xabs
25*xabs = 22206
B
w1359
4442 >= 5*xabs
5*xabs = 4442
A
w1360
22218 >= 25*xabs
25*xabs = 22218
B
w1361
22222 >= 25*xabs
25*xabs = 22222
A
w1362
4446 >= 5*xabs
5*xabs = 4446
B
w1363
22234 >= 25*xabs
25*xabs = 22234
A
w1364
22242 >= 25*xabs
25*xabs = 22242
B
w1365
22246 >= 25*xabs
25*xabs = 22246
A
w1366
4451 >= 5*xabs
5*xabs = 4451
B

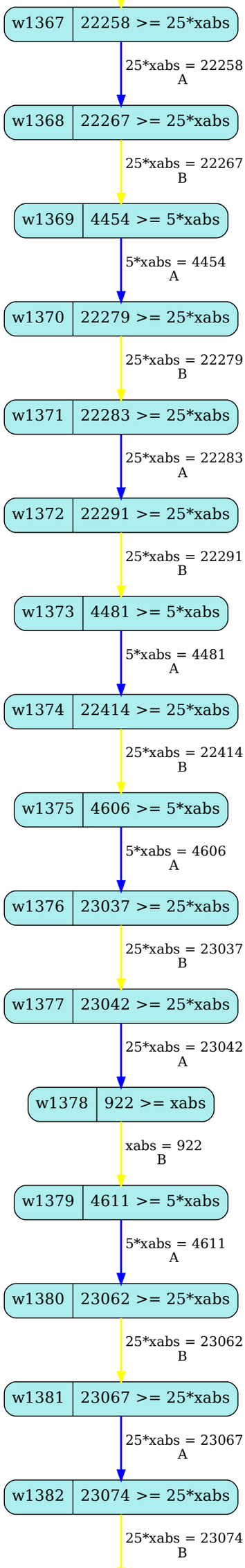
w1367
22258 >= 25*xabs
25*xabs = 22258
A
w1368
22267 >= 25*xabs
25*xabs = 22267
B
w1369
4454 >= 5*xabs
5*xabs = 4454
A
w1370
22279 >= 25*xabs
25*xabs = 22279
B
w1371
22283 >= 25*xabs
25*xabs = 22283
A
w1372
22291 >= 25*xabs
25*xabs = 22291
B
w1373
4481 >= 5*xabs
5*xabs = 4481
A
w1374
22414 >= 25*xabs
25*xabs = 22414
B
w1375
4606 >= 5*xabs
5*xabs = 4606
A
w1376
23037 >= 25*xabs
25*xabs = 23037
B
w1377
23042 >= 25*xabs
25*xabs = 23042
A
w1378
922 >= xabs
xabs = 922
B
w1379
4611 >= 5*xabs
5*xabs = 4611
A
w1380
23062 >= 25*xabs
25*xabs = 23062
B
w1381
23067 >= 25*xabs
25*xabs = 23067
A
w1382
23074 >= 25*xabs
25*xabs = 23074
B

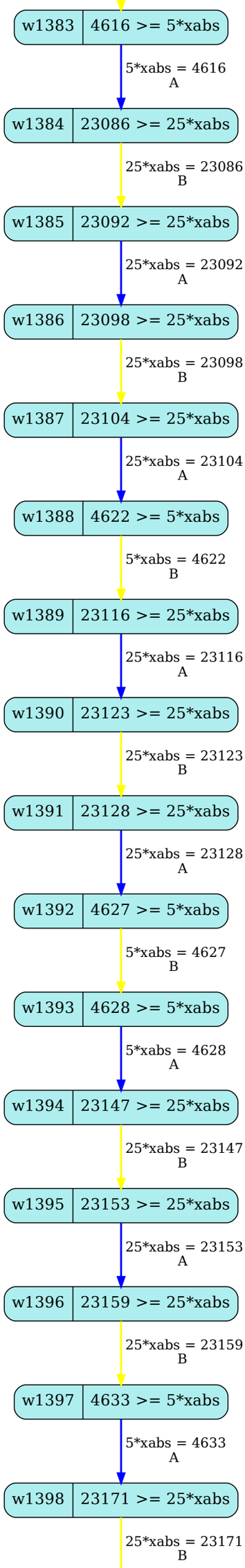
w1383
4616 >= 5*xabs
5*xabs = 4616
A
w1384
23086 >= 25*xabs
25*xabs = 23086
B
w1385
23092 >= 25*xabs
25*xabs = 23092
A
w1386
23098 >= 25*xabs
25*xabs = 23098
B
w1387
23104 >= 25*xabs
25*xabs = 23104
A
w1388
4622 >= 5*xabs
5*xabs = 4622
B
w1389
23116 >= 25*xabs
25*xabs = 23116
A
w1390
23123 >= 25*xabs
25*xabs = 23123
B
w1391
23128 >= 25*xabs
25*xabs = 23128
A
w1392
4627 >= 5*xabs
5*xabs = 4627
B
w1393
4628 >= 5*xabs
5*xabs = 4628
A
w1394
23147 >= 25*xabs
25*xabs = 23147
B
w1395
23153 >= 25*xabs
25*xabs = 23153
A
w1396
23159 >= 25*xabs
25*xabs = 23159
B
w1397
4633 >= 5*xabs
5*xabs = 4633
A
w1398
23171 >= 25*xabs
25*xabs = 23171
B

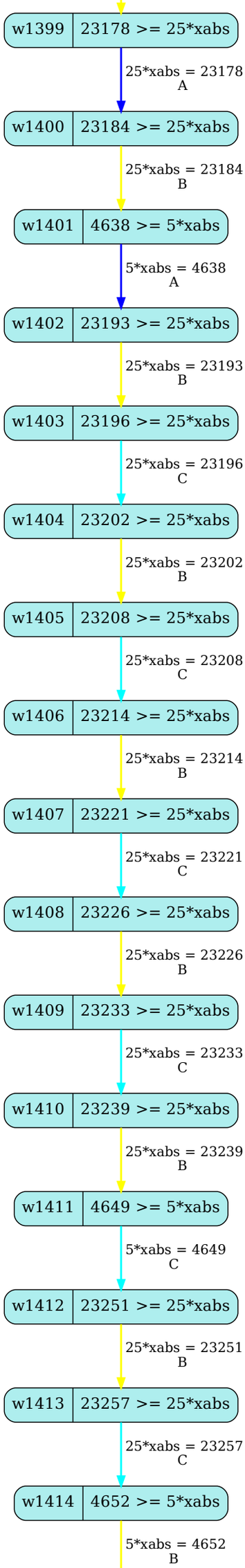
w1399
23178 >= 25*xabs
25*xabs = 23178
A
w1400
23184 >= 25*xabs
25*xabs = 23184
B
w1401
4638 >= 5*xabs
5*xabs = 4638
A
w1402
23193 >= 25*xabs
25*xabs = 23193
B
w1403
23196 >= 25*xabs
25*xabs = 23196
C
w1404
23202 >= 25*xabs
25*xabs = 23202
B
w1405
23208 >= 25*xabs
25*xabs = 23208
C
w1406
23214 >= 25*xabs
25*xabs = 23214
B
w1407
23221 >= 25*xabs
25*xabs = 23221
C
w1408
23226 >= 25*xabs
25*xabs = 23226
B
w1409
23233 >= 25*xabs
25*xabs = 23233
C
w1410
23239 >= 25*xabs
25*xabs = 23239
B
w1411
4649 >= 5*xabs
5*xabs = 4649
C
w1412
23251 >= 25*xabs
25*xabs = 23251
B
w1413
23257 >= 25*xabs
25*xabs = 23257
C
w1414
4652 >= 5*xabs
5*xabs = 4652
B

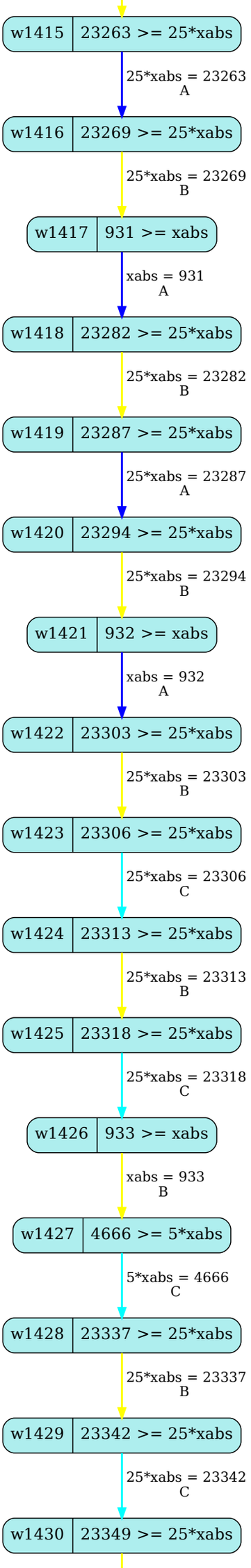
w1415
23263 >= 25*xabs
25*xabs = 23263
A
w1416
23269 >= 25*xabs
25*xabs = 23269
B
w1417
931 >= xabs
xabs = 931
A
w1418
23282 >= 25*xabs
25*xabs = 23282
B
w1419
23287 >= 25*xabs
25*xabs = 23287
A
w1420
23294 >= 25*xabs
25*xabs = 23294
B
w1421
932 >= xabs
xabs = 932
A
w1422
23303 >= 25*xabs
25*xabs = 23303
B
w1423
23306 >= 25*xabs
25*xabs = 23306
C
w1424
23313 >= 25*xabs
25*xabs = 23313
B
w1425
23318 >= 25*xabs
25*xabs = 23318
C
w1426
933 >= xabs
xabs = 933
B
w1427
4666 >= 5*xabs
5*xabs = 4666
C
w1428
23337 >= 25*xabs
25*xabs = 23337
B
w1429
23342 >= 25*xabs
25*xabs = 23342
C
w1430
23349 >= 25*xabs

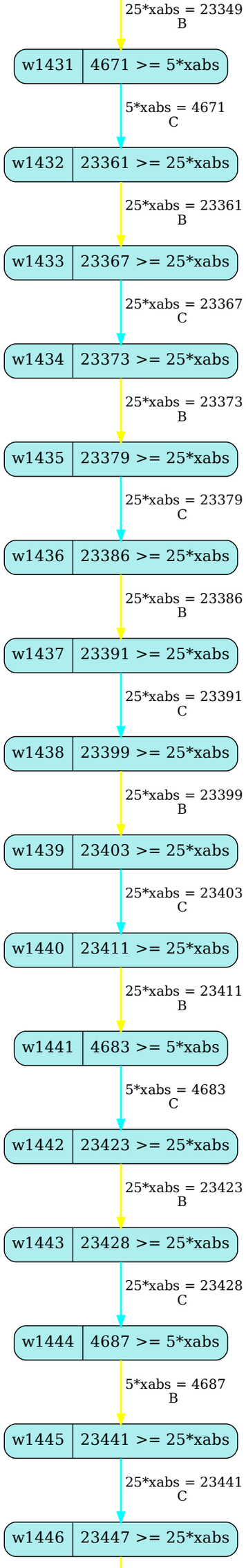
25*xabs = 23349
B
w1431
4671 >= 5*xabs
5*xabs = 4671
C
w1432
23361 >= 25*xabs
25*xabs = 23361
B
w1433
23367 >= 25*xabs
25*xabs = 23367
C
w1434
23373 >= 25*xabs
25*xabs = 23373
B
w1435
23379 >= 25*xabs
25*xabs = 23379
C
w1436
23386 >= 25*xabs
25*xabs = 23386
B
w1437
23391 >= 25*xabs
25*xabs = 23391
C
w1438
23399 >= 25*xabs
25*xabs = 23399
B
w1439
23403 >= 25*xabs
25*xabs = 23403
C
w1440
23411 >= 25*xabs
25*xabs = 23411
B
w1441
4683 >= 5*xabs
5*xabs = 4683
C
w1442
23423 >= 25*xabs
25*xabs = 23423
B
w1443
23428 >= 25*xabs
25*xabs = 23428
C
w1444
4687 >= 5*xabs
5*xabs = 4687
B
w1445
23441 >= 25*xabs
25*xabs = 23441
C
w1446
23447 >= 25*xabs

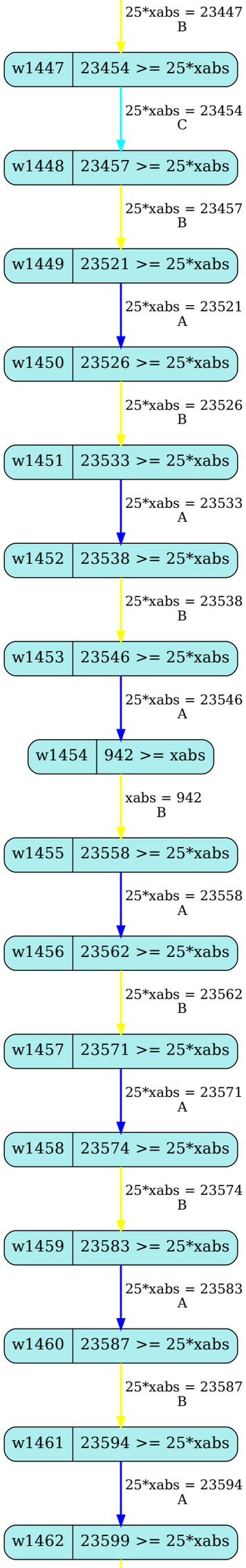
25*xabs = 23447
B
w1447
23454 >= 25*xabs
25*xabs = 23454
C
w1448
23457 >= 25*xabs
25*xabs = 23457
B
w1449
23521 >= 25*xabs
25*xabs = 23521
A
w1450
23526 >= 25*xabs
25*xabs = 23526
B
w1451
23533 >= 25*xabs
25*xabs = 23533
A
w1452
23538 >= 25*xabs
25*xabs = 23538
B
w1453
23546 >= 25*xabs
25*xabs = 23546
A
w1454
942 >= xabs
xabs = 942
B
w1455
23558 >= 25*xabs
25*xabs = 23558
A
w1456
23562 >= 25*xabs
25*xabs = 23562
B
w1457
23571 >= 25*xabs
25*xabs = 23571
A
w1458
23574 >= 25*xabs
25*xabs = 23574
B
w1459
23583 >= 25*xabs
25*xabs = 23583
A
w1460
23587 >= 25*xabs
25*xabs = 23587
B
w1461
23594 >= 25*xabs
25*xabs = 23594
A
w1462
23599 >= 25*xabs

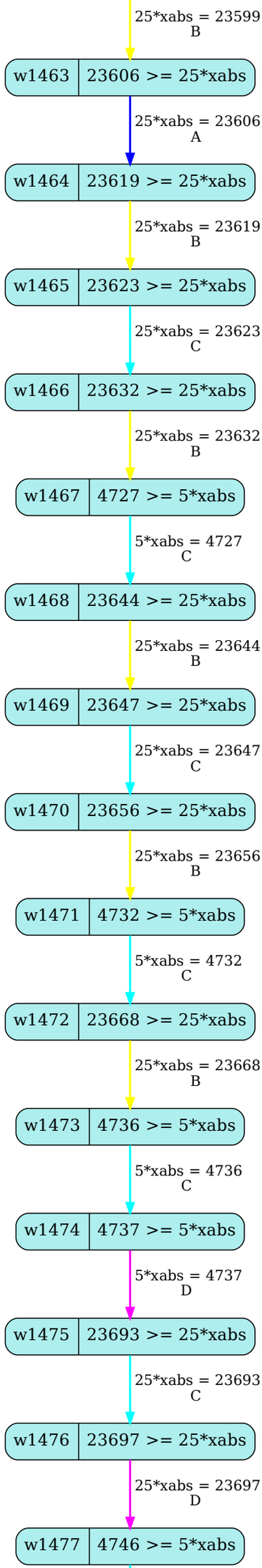
25*xabs = 23599
B
w1463
23606 >= 25*xabs
25*xabs = 23606
A
w1464
23619 >= 25*xabs
25*xabs = 23619
B
w1465
23623 >= 25*xabs
25*xabs = 23623
C
w1466
23632 >= 25*xabs
25*xabs = 23632
B
w1467
4727 >= 5*xabs
5*xabs = 4727
C
w1468
23644 >= 25*xabs
25*xabs = 23644
B
w1469
23647 >= 25*xabs
25*xabs = 23647
C
w1470
23656 >= 25*xabs
25*xabs = 23656
B
w1471
4732 >= 5*xabs
5*xabs = 4732
C
w1472
23668 >= 25*xabs
25*xabs = 23668
B
w1473
4736 >= 5*xabs
5*xabs = 4736
C
w1474
4737 >= 5*xabs
5*xabs = 4737
D
w1475
23693 >= 25*xabs
25*xabs = 23693
C
w1476
23697 >= 25*xabs
25*xabs = 23697
D
w1477
4746 >= 5*xabs

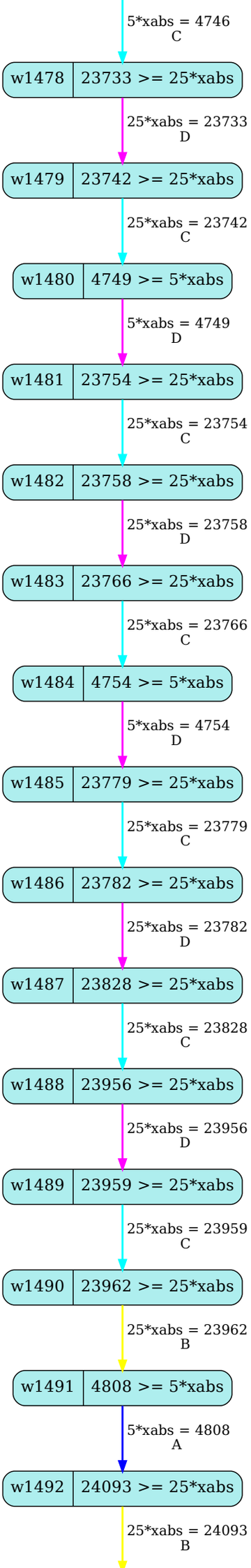
5*xabs = 4746
C
w1478
23733 >= 25*xabs
25*xabs = 23733
D
w1479
23742 >= 25*xabs
25*xabs = 23742
C
w1480
4749 >= 5*xabs
5*xabs = 4749
D
w1481
23754 >= 25*xabs
25*xabs = 23754
C
w1482
23758 >= 25*xabs
25*xabs = 23758
D
w1483
23766 >= 25*xabs
25*xabs = 23766
C
w1484
4754 >= 5*xabs
5*xabs = 4754
D
w1485
23779 >= 25*xabs
25*xabs = 23779
C
w1486
23782 >= 25*xabs
25*xabs = 23782
D
w1487
23828 >= 25*xabs
25*xabs = 23828
C
w1488
23956 >= 25*xabs
25*xabs = 23956
D
w1489
23959 >= 25*xabs
25*xabs = 23959
C
w1490
23962 >= 25*xabs
25*xabs = 23962
B
w1491
4808 >= 5*xabs
5*xabs = 4808
A
w1492
24093 >= 25*xabs
25*xabs = 24093
B

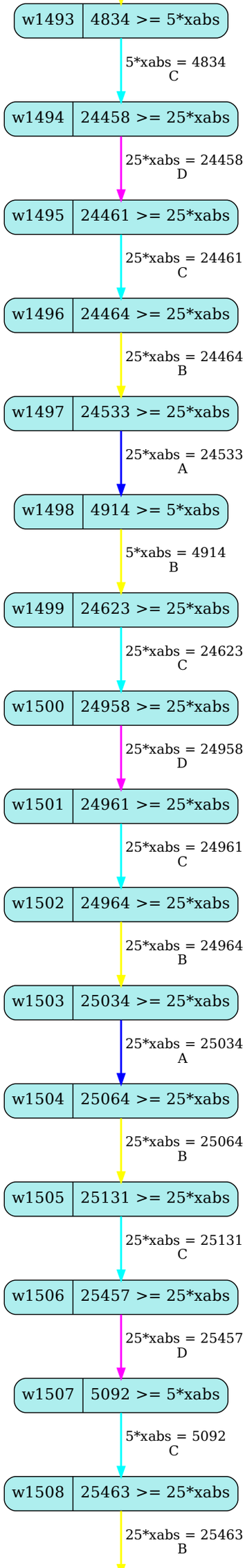
w1493
4834 >= 5*xabs
5*xabs = 4834
C
w1494
24458 >= 25*xabs
25*xabs = 24458
D
w1495
24461 >= 25*xabs
25*xabs = 24461
C
w1496
24464 >= 25*xabs
25*xabs = 24464
B
w1497
24533 >= 25*xabs
25*xabs = 24533
A
w1498
4914 >= 5*xabs
5*xabs = 4914
B
w1499
24623 >= 25*xabs
25*xabs = 24623
C
w1500
24958 >= 25*xabs
25*xabs = 24958
D
w1501
24961 >= 25*xabs
25*xabs = 24961
C
w1502
24964 >= 25*xabs
25*xabs = 24964
B
w1503
25034 >= 25*xabs
25*xabs = 25034
A
w1504
25064 >= 25*xabs
25*xabs = 25064
B
w1505
25131 >= 25*xabs
25*xabs = 25131
C
w1506
25457 >= 25*xabs
25*xabs = 25457
D
w1507
5092 >= 5*xabs
5*xabs = 5092
C
w1508
25463 >= 25*xabs
25*xabs = 25463
B

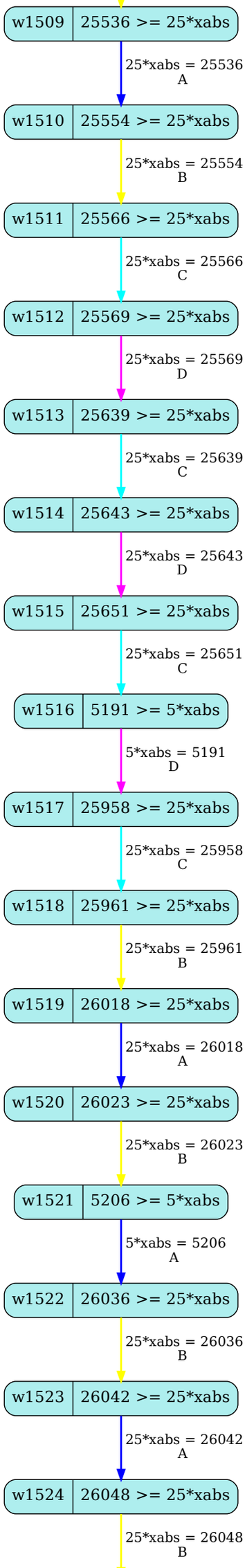
w1509
25536 >= 25*xabs
25*xabs = 25536
A
w1510
25554 >= 25*xabs
25*xabs = 25554
B
w1511
25566 >= 25*xabs
25*xabs = 25566
C
w1512
25569 >= 25*xabs
25*xabs = 25569
D
w1513
25639 >= 25*xabs
25*xabs = 25639
C
w1514
25643 >= 25*xabs
25*xabs = 25643
D
w1515
25651 >= 25*xabs
25*xabs = 25651
C
w1516
5191 >= 5*xabs
5*xabs = 5191
D
w1517
25958 >= 25*xabs
25*xabs = 25958
C
w1518
25961 >= 25*xabs
25*xabs = 25961
B
w1519
26018 >= 25*xabs
25*xabs = 26018
A
w1520
26023 >= 25*xabs
25*xabs = 26023
B
w1521
5206 >= 5*xabs
5*xabs = 5206
A
w1522
26036 >= 25*xabs
25*xabs = 26036
B
w1523
26042 >= 25*xabs
25*xabs = 26042
A
w1524
26048 >= 25*xabs
25*xabs = 26048
B

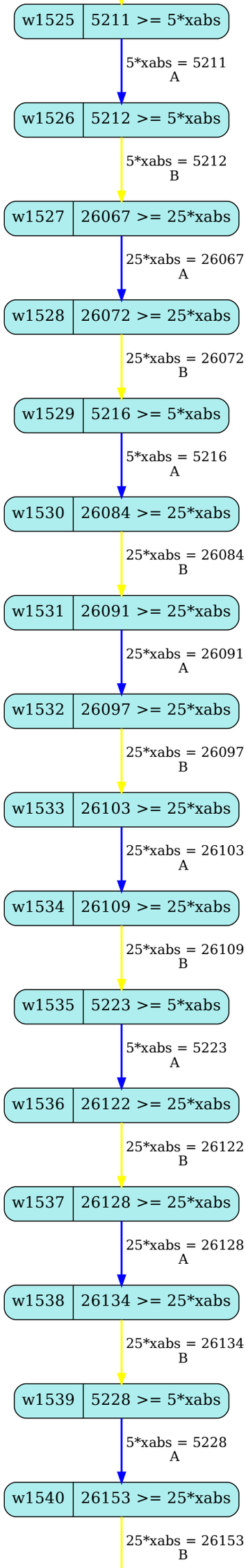
w1525
5211 >= 5*xabs
5*xabs = 5211
A
w1526
5212 >= 5*xabs
5*xabs = 5212
B
w1527
26067 >= 25*xabs
25*xabs = 26067
A
w1528
26072 >= 25*xabs
25*xabs = 26072
B
w1529
5216 >= 5*xabs
5*xabs = 5216
A
w1530
26084 >= 25*xabs
25*xabs = 26084
B
w1531
26091 >= 25*xabs
25*xabs = 26091
A
w1532
26097 >= 25*xabs
25*xabs = 26097
B
w1533
26103 >= 25*xabs
25*xabs = 26103
A
w1534
26109 >= 25*xabs
25*xabs = 26109
B
w1535
5223 >= 5*xabs
5*xabs = 5223
A
w1536
26122 >= 25*xabs
25*xabs = 26122
B
w1537
26128 >= 25*xabs
25*xabs = 26128
A
w1538
26134 >= 25*xabs
25*xabs = 26134
B
w1539
5228 >= 5*xabs
5*xabs = 5228
A
w1540
26153 >= 25*xabs
25*xabs = 26153
B

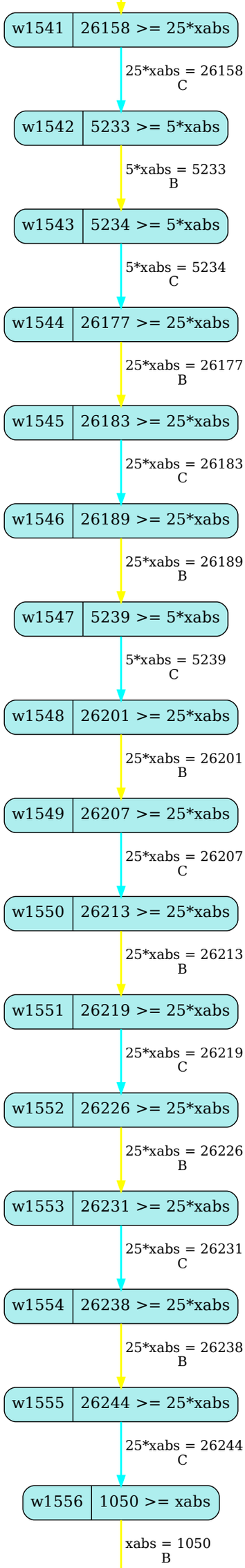
w1541
26158 >= 25*xabs
25*xabs = 26158
C
w1542
5233 >= 5*xabs
5*xabs = 5233
B
w1543
5234 >= 5*xabs
5*xabs = 5234
C
w1544
26177 >= 25*xabs
25*xabs = 26177
B
w1545
26183 >= 25*xabs
25*xabs = 26183
C
w1546
26189 >= 25*xabs
25*xabs = 26189
B
w1547
5239 >= 5*xabs
5*xabs = 5239
C
w1548
26201 >= 25*xabs
25*xabs = 26201
B
w1549
26207 >= 25*xabs
25*xabs = 26207
C
w1550
26213 >= 25*xabs
25*xabs = 26213
B
w1551
26219 >= 25*xabs
25*xabs = 26219
C
w1552
26226 >= 25*xabs
25*xabs = 26226
B
w1553
26231 >= 25*xabs
25*xabs = 26231
C
w1554
26238 >= 25*xabs
25*xabs = 26238
B
w1555
26244 >= 25*xabs
25*xabs = 26244
C
w1556
1050 >= xabs
xabs = 1050
B

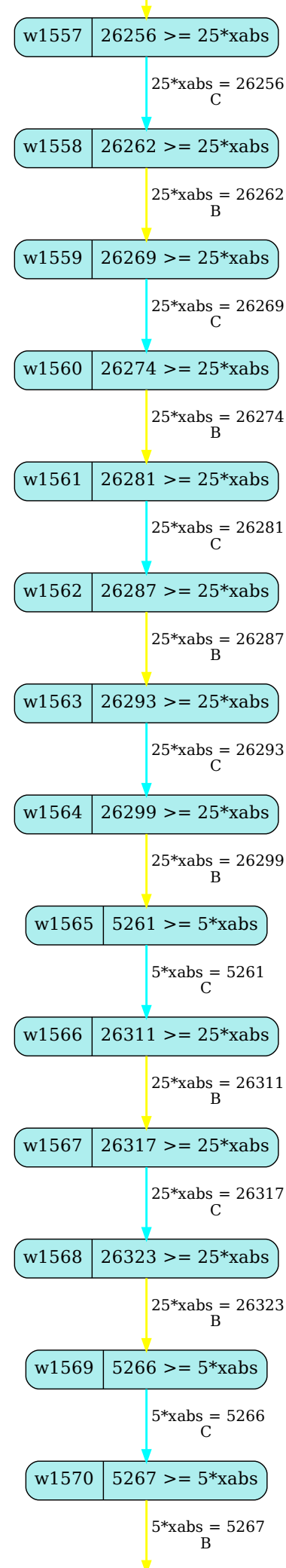
w1557
26256 >= 25*xabs
25*xabs = 26256
C
w1558
26262 >= 25*xabs
25*xabs = 26262
B
w1559
26269 >= 25*xabs
25*xabs = 26269
C
w1560
26274 >= 25*xabs
25*xabs = 26274
B
w1561
26281 >= 25*xabs
25*xabs = 26281
C
w1562
26287 >= 25*xabs
25*xabs = 26287
B
w1563
26293 >= 25*xabs
25*xabs = 26293
C
w1564
26299 >= 25*xabs
25*xabs = 26299
B
w1565
5261 >= 5*xabs
5*xabs = 5261
C
w1566
26311 >= 25*xabs
25*xabs = 26311
B
w1567
26317 >= 25*xabs
25*xabs = 26317
C
w1568
26323 >= 25*xabs
25*xabs = 26323
B
w1569
5266 >= 5*xabs
5*xabs = 5266
C
w1570
5267 >= 5*xabs
5*xabs = 5267
B

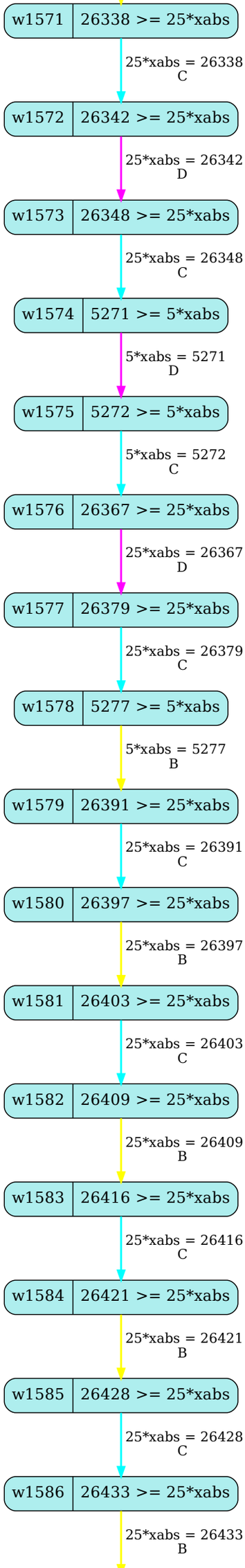
w1571
26338 >= 25*xabs
25*xabs = 26338
C
w1572
26342 >= 25*xabs
25*xabs = 26342
D
w1573
26348 >= 25*xabs
25*xabs = 26348
C
w1574
5271 >= 5*xabs
5*xabs = 5271
D
w1575
5272 >= 5*xabs
5*xabs = 5272
C
w1576
26367 >= 25*xabs
25*xabs = 26367
D
w1577
26379 >= 25*xabs
25*xabs = 26379
C
w1578
5277 >= 5*xabs
5*xabs = 5277
B
w1579
26391 >= 25*xabs
25*xabs = 26391
C
w1580
26397 >= 25*xabs
25*xabs = 26397
B
w1581
26403 >= 25*xabs
25*xabs = 26403
C
w1582
26409 >= 25*xabs
25*xabs = 26409
B
w1583
26416 >= 25*xabs
25*xabs = 26416
C
w1584
26421 >= 25*xabs
25*xabs = 26421
B
w1585
26428 >= 25*xabs
25*xabs = 26428
C
w1586
26433 >= 25*xabs
25*xabs = 26433
B

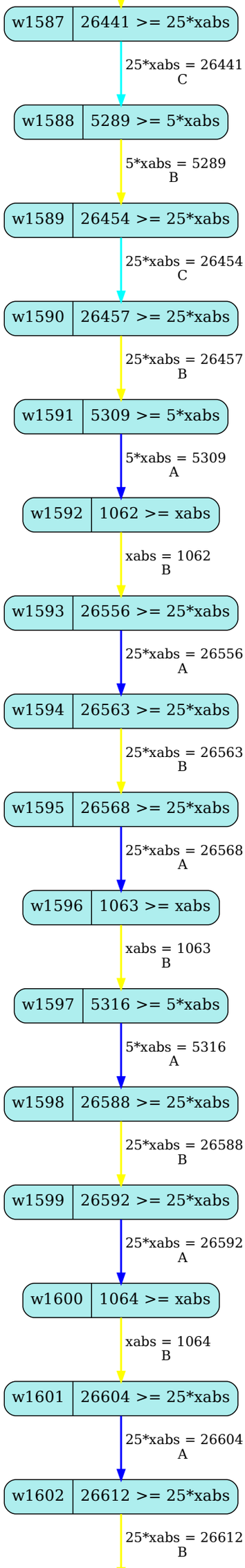
w1587
26441 >= 25*xabs
25*xabs = 26441
C
w1588
5289 >= 5*xabs
5*xabs = 5289
B
w1589
26454 >= 25*xabs
25*xabs = 26454
C
w1590
26457 >= 25*xabs
25*xabs = 26457
B
w1591
5309 >= 5*xabs
5*xabs = 5309
A
w1592
1062 >= xabs
xabs = 1062
B
w1593
26556 >= 25*xabs
25*xabs = 26556
A
w1594
26563 >= 25*xabs
25*xabs = 26563
B
w1595
26568 >= 25*xabs
25*xabs = 26568
A
w1596
1063 >= xabs
xabs = 1063
B
w1597
5316 >= 5*xabs
5*xabs = 5316
A
w1598
26588 >= 25*xabs
25*xabs = 26588
B
w1599
26592 >= 25*xabs
25*xabs = 26592
A
w1600
1064 >= xabs
xabs = 1064
B
w1601
26604 >= 25*xabs
25*xabs = 26604
A
w1602
26612 >= 25*xabs
25*xabs = 26612
B

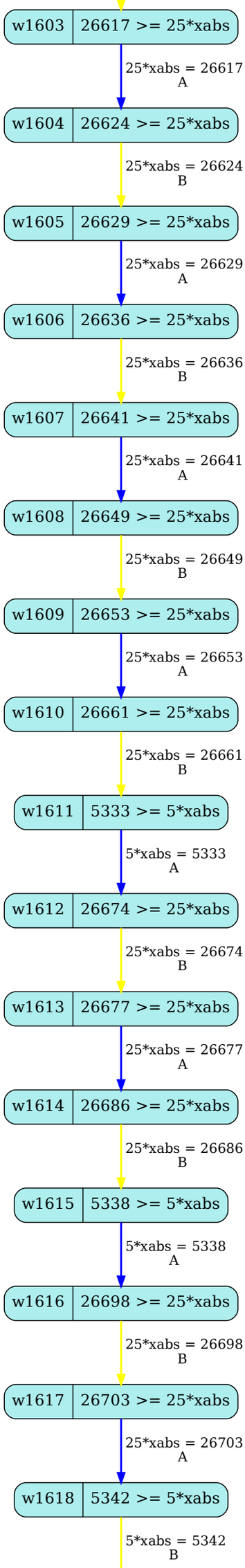
w1603
26617 >= 25*xabs
25*xabs = 26617
A
w1604
26624 >= 25*xabs
25*xabs = 26624
B
w1605
26629 >= 25*xabs
25*xabs = 26629
A
w1606
26636 >= 25*xabs
25*xabs = 26636
B
w1607
26641 >= 25*xabs
25*xabs = 26641
A
w1608
26649 >= 25*xabs
25*xabs = 26649
B
w1609
26653 >= 25*xabs
25*xabs = 26653
A
w1610
26661 >= 25*xabs
25*xabs = 26661
B
w1611
5333 >= 5*xabs
5*xabs = 5333
A
w1612
26674 >= 25*xabs
25*xabs = 26674
B
w1613
26677 >= 25*xabs
25*xabs = 26677
A
w1614
26686 >= 25*xabs
25*xabs = 26686
B
w1615
5338 >= 5*xabs
5*xabs = 5338
A
w1616
26698 >= 25*xabs
25*xabs = 26698
B
w1617
26703 >= 25*xabs
25*xabs = 26703
A
w1618
5342 >= 5*xabs
5*xabs = 5342
B

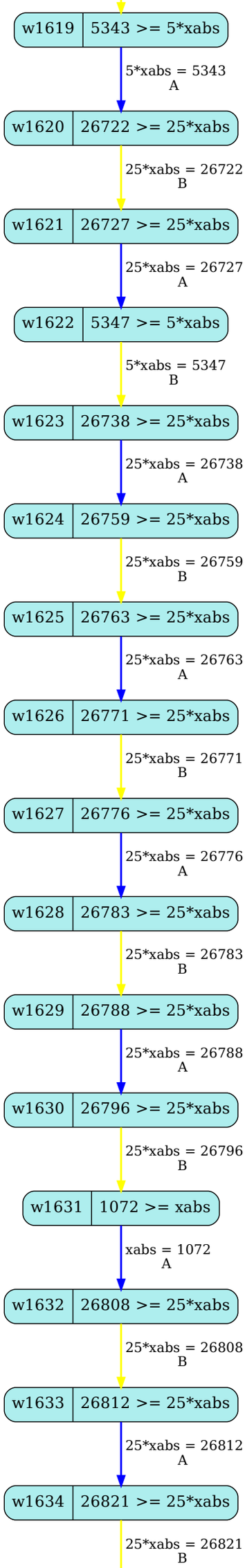
w1619
5343 >= 5*xabs
5*xabs = 5343
A
w1620
26722 >= 25*xabs
25*xabs = 26722
B
w1621
26727 >= 25*xabs
25*xabs = 26727
A
w1622
5347 >= 5*xabs
5*xabs = 5347
B
w1623
26738 >= 25*xabs
25*xabs = 26738
A
w1624
26759 >= 25*xabs
25*xabs = 26759
B
w1625
26763 >= 25*xabs
25*xabs = 26763
A
w1626
26771 >= 25*xabs
25*xabs = 26771
B
w1627
26776 >= 25*xabs
25*xabs = 26776
A
w1628
26783 >= 25*xabs
25*xabs = 26783
B
w1629
26788 >= 25*xabs
25*xabs = 26788
A
w1630
26796 >= 25*xabs
25*xabs = 26796
B
w1631
1072 >= xabs
xabs = 1072
A
w1632
26808 >= 25*xabs
25*xabs = 26808
B
w1633
26812 >= 25*xabs
25*xabs = 26812
A
w1634
26821 >= 25*xabs
25*xabs = 26821
B

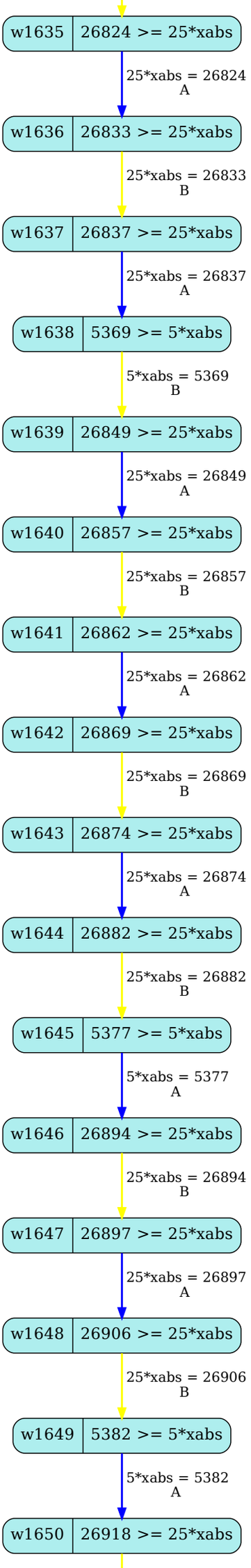
w1635
26824 >= 25*xabs
25*xabs = 26824
A
w1636
26833 >= 25*xabs
25*xabs = 26833
B
w1637
26837 >= 25*xabs
25*xabs = 26837
A
w1638
5369 >= 5*xabs
5*xabs = 5369
B
w1639
26849 >= 25*xabs
25*xabs = 26849
A
w1640
26857 >= 25*xabs
25*xabs = 26857
B
w1641
26862 >= 25*xabs
25*xabs = 26862
A
w1642
26869 >= 25*xabs
25*xabs = 26869
B
w1643
26874 >= 25*xabs
25*xabs = 26874
A
w1644
26882 >= 25*xabs
25*xabs = 26882
B
w1645
5377 >= 5*xabs
5*xabs = 5377
A
w1646
26894 >= 25*xabs
25*xabs = 26894
B
w1647
26897 >= 25*xabs
25*xabs = 26897
A
w1648
26906 >= 25*xabs
25*xabs = 26906
B
w1649
5382 >= 5*xabs
5*xabs = 5382
A
w1650
26918 >= 25*xabs

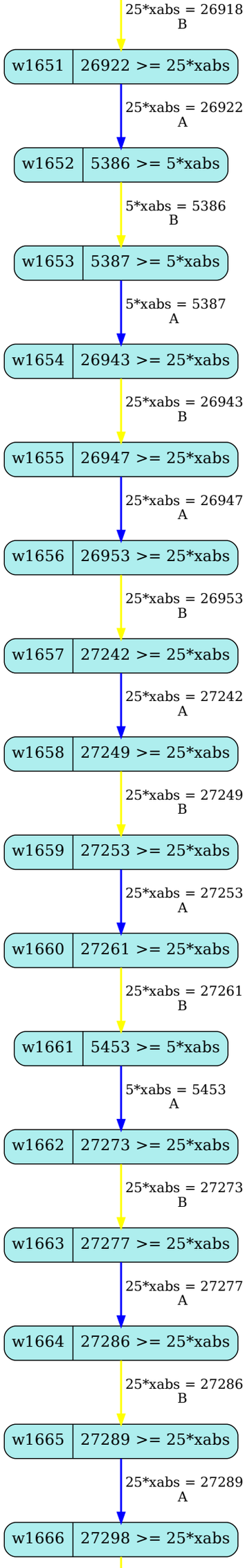
25*xabs = 26918
B
w1651
26922 >= 25*xabs
25*xabs = 26922
A
w1652
5386 >= 5*xabs
5*xabs = 5386
B
w1653
5387 >= 5*xabs
5*xabs = 5387
A
w1654
26943 >= 25*xabs
25*xabs = 26943
B
w1655
26947 >= 25*xabs
25*xabs = 26947
A
w1656
26953 >= 25*xabs
25*xabs = 26953
B
w1657
27242 >= 25*xabs
25*xabs = 27242
A
w1658
27249 >= 25*xabs
25*xabs = 27249
B
w1659
27253 >= 25*xabs
25*xabs = 27253
A
w1660
27261 >= 25*xabs
25*xabs = 27261
B
w1661
5453 >= 5*xabs
5*xabs = 5453
A
w1662
27273 >= 25*xabs
25*xabs = 27273
B
w1663
27277 >= 25*xabs
25*xabs = 27277
A
w1664
27286 >= 25*xabs
25*xabs = 27286
B
w1665
27289 >= 25*xabs
25*xabs = 27289
A
w1666
27298 >= 25*xabs

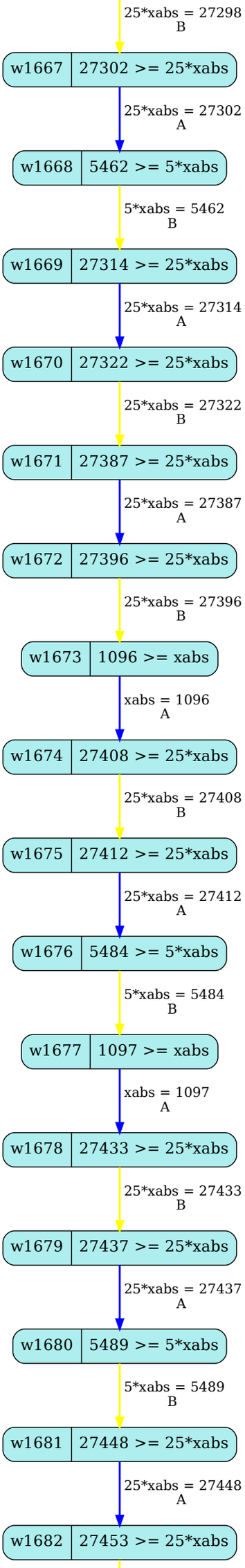
25*xabs = 27298
B
w1667
27302 >= 25*xabs
25*xabs = 27302
A
w1668
5462 >= 5*xabs
5*xabs = 5462
B
w1669
27314 >= 25*xabs
25*xabs = 27314
A
w1670
27322 >= 25*xabs
25*xabs = 27322
B
w1671
27387 >= 25*xabs
25*xabs = 27387
A
w1672
27396 >= 25*xabs
25*xabs = 27396
B
w1673
1096 >= xabs
xabs = 1096
A
w1674
27408 >= 25*xabs
25*xabs = 27408
B
w1675
27412 >= 25*xabs
25*xabs = 27412
A
w1676
5484 >= 5*xabs
5*xabs = 5484
B
w1677
1097 >= xabs
xabs = 1097
A
w1678
27433 >= 25*xabs
25*xabs = 27433
B
w1679
27437 >= 25*xabs
25*xabs = 27437
A
w1680
5489 >= 5*xabs
5*xabs = 5489
B
w1681
27448 >= 25*xabs
25*xabs = 27448
A
w1682
27453 >= 25*xabs

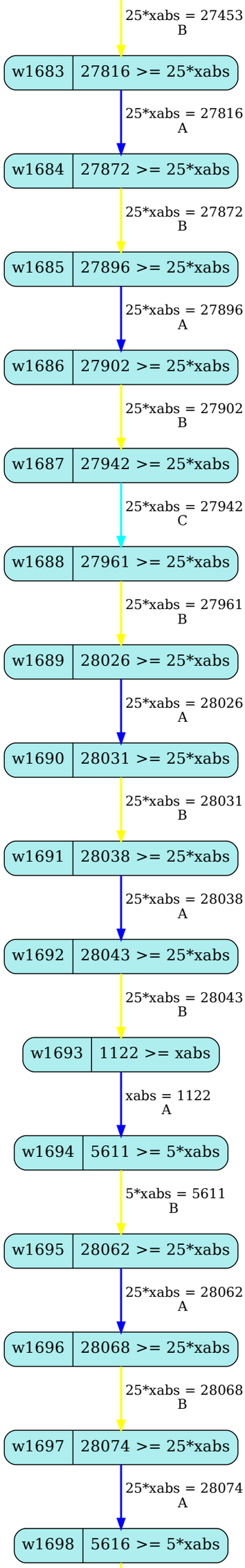
25*xabs = 27453
B
w1683
27816 >= 25*xabs
25*xabs = 27816
A
w1684
27872 >= 25*xabs
25*xabs = 27872
B
w1685
27896 >= 25*xabs
25*xabs = 27896
A
w1686
27902 >= 25*xabs
25*xabs = 27902
B
w1687
27942 >= 25*xabs
25*xabs = 27942
C
w1688
27961 >= 25*xabs
25*xabs = 27961
B
w1689
28026 >= 25*xabs
25*xabs = 28026
A
w1690
28031 >= 25*xabs
25*xabs = 28031
B
w1691
28038 >= 25*xabs
25*xabs = 28038
A
w1692
28043 >= 25*xabs
25*xabs = 28043
B
w1693
1122 >= xabs
xabs = 1122
A
w1694
5611 >= 5*xabs
5*xabs = 5611
B
w1695
28062 >= 25*xabs
25*xabs = 28062
A
w1696
28068 >= 25*xabs
25*xabs = 28068
B
w1697
28074 >= 25*xabs
25*xabs = 28074
A
w1698
5616 >= 5*xabs

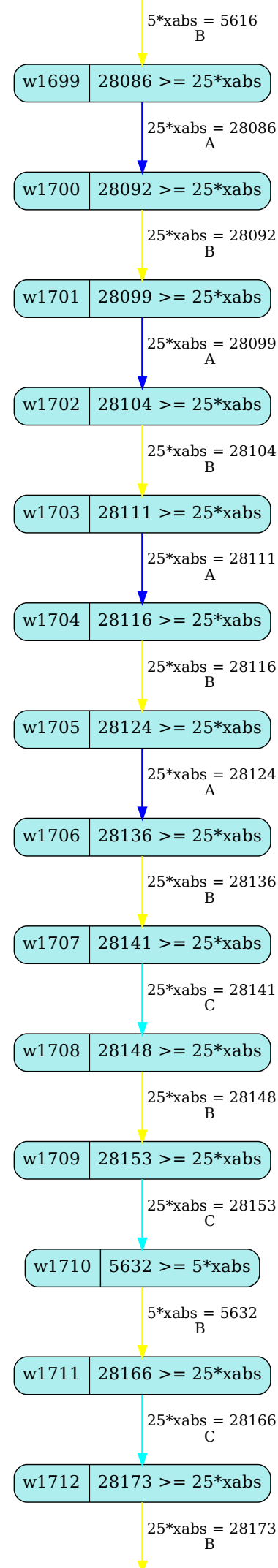
5*xabs = 5616
B
w1699
28086 >= 25*xabs
25*xabs = 28086
A
w1700
28092 >= 25*xabs
25*xabs = 28092
B
w1701
28099 >= 25*xabs
25*xabs = 28099
A
w1702
28104 >= 25*xabs
25*xabs = 28104
B
w1703
28111 >= 25*xabs
25*xabs = 28111
A
w1704
28116 >= 25*xabs
25*xabs = 28116
B
w1705
28124 >= 25*xabs
25*xabs = 28124
A
w1706
28136 >= 25*xabs
25*xabs = 28136
B
w1707
28141 >= 25*xabs
25*xabs = 28141
C
w1708
28148 >= 25*xabs
25*xabs = 28148
B
w1709
28153 >= 25*xabs
25*xabs = 28153
C
w1710
5632 >= 5*xabs
5*xabs = 5632
B
w1711
28166 >= 25*xabs
25*xabs = 28166
C
w1712
28173 >= 25*xabs
25*xabs = 28173
B

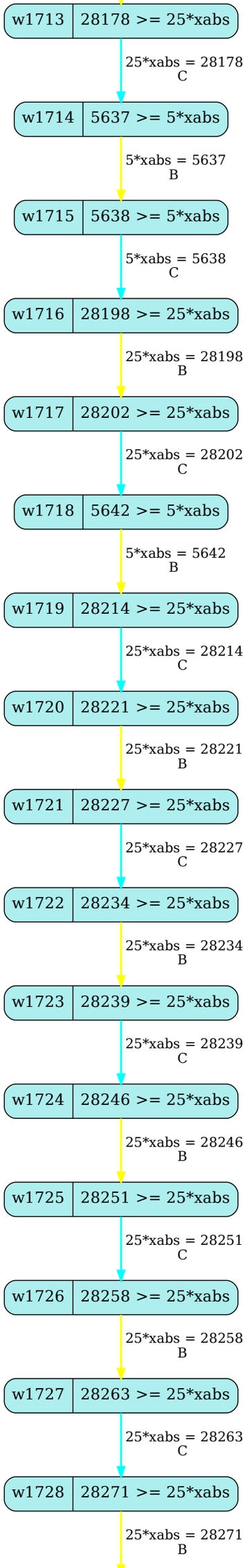
w1713
28178 >= 25*xabs
25*xabs = 28178
C
w1714
5637 >= 5*xabs
5*xabs = 5637
B
w1715
5638 >= 5*xabs
5*xabs = 5638
C
w1716
28198 >= 25*xabs
25*xabs = 28198
B
w1717
28202 >= 25*xabs
25*xabs = 28202
C
w1718
5642 >= 5*xabs
5*xabs = 5642
B
w1719
28214 >= 25*xabs
25*xabs = 28214
C
w1720
28221 >= 25*xabs
25*xabs = 28221
B
w1721
28227 >= 25*xabs
25*xabs = 28227
C
w1722
28234 >= 25*xabs
25*xabs = 28234
B
w1723
28239 >= 25*xabs
25*xabs = 28239
C
w1724
28246 >= 25*xabs
25*xabs = 28246
B
w1725
28251 >= 25*xabs
25*xabs = 28251
C
w1726
28258 >= 25*xabs
25*xabs = 28258
B
w1727
28263 >= 25*xabs
25*xabs = 28263
C
w1728
28271 >= 25*xabs
25*xabs = 28271
B

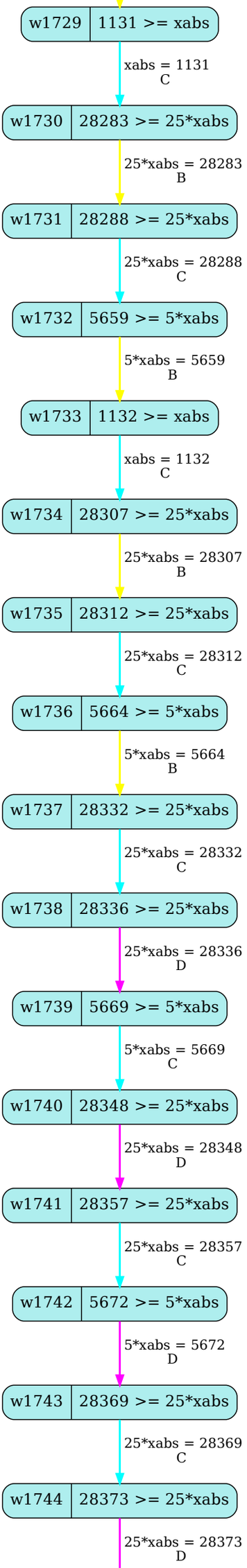
w1729
1131 >= xabs
xabs = 1131
C
w1730
28283 >= 25*xabs
25*xabs = 28283
B
w1731
28288 >= 25*xabs
25*xabs = 28288
C
w1732
5659 >= 5*xabs
5*xabs = 5659
B
w1733
1132 >= xabs
xabs = 1132
C
w1734
28307 >= 25*xabs
25*xabs = 28307
B
w1735
28312 >= 25*xabs
25*xabs = 28312
C
w1736
5664 >= 5*xabs
5*xabs = 5664
B
w1737
28332 >= 25*xabs
25*xabs = 28332
C
w1738
28336 >= 25*xabs
25*xabs = 28336
D
w1739
5669 >= 5*xabs
5*xabs = 5669
C
w1740
28348 >= 25*xabs
25*xabs = 28348
D
w1741
28357 >= 25*xabs
25*xabs = 28357
C
w1742
5672 >= 5*xabs
5*xabs = 5672
D
w1743
28369 >= 25*xabs
25*xabs = 28369
C
w1744
28373 >= 25*xabs
25*xabs = 28373
D

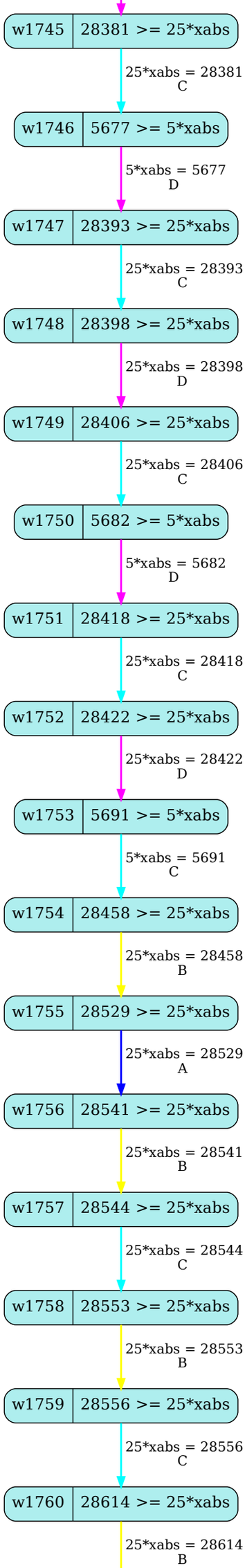
w1745
28381 >= 25*xabs
25*xabs = 28381
C
w1746
5677 >= 5*xabs
5*xabs = 5677
D
w1747
28393 >= 25*xabs
25*xabs = 28393
C
w1748
28398 >= 25*xabs
25*xabs = 28398
D
w1749
28406 >= 25*xabs
25*xabs = 28406
C
w1750
5682 >= 5*xabs
5*xabs = 5682
D
w1751
28418 >= 25*xabs
25*xabs = 28418
C
w1752
28422 >= 25*xabs
25*xabs = 28422
D
w1753
5691 >= 5*xabs
5*xabs = 5691
C
w1754
28458 >= 25*xabs
25*xabs = 28458
B
w1755
28529 >= 25*xabs
25*xabs = 28529
A
w1756
28541 >= 25*xabs
25*xabs = 28541
B
w1757
28544 >= 25*xabs
25*xabs = 28544
C
w1758
28553 >= 25*xabs
25*xabs = 28553
B
w1759
28556 >= 25*xabs
25*xabs = 28556
C
w1760
28614 >= 25*xabs
25*xabs = 28614
B

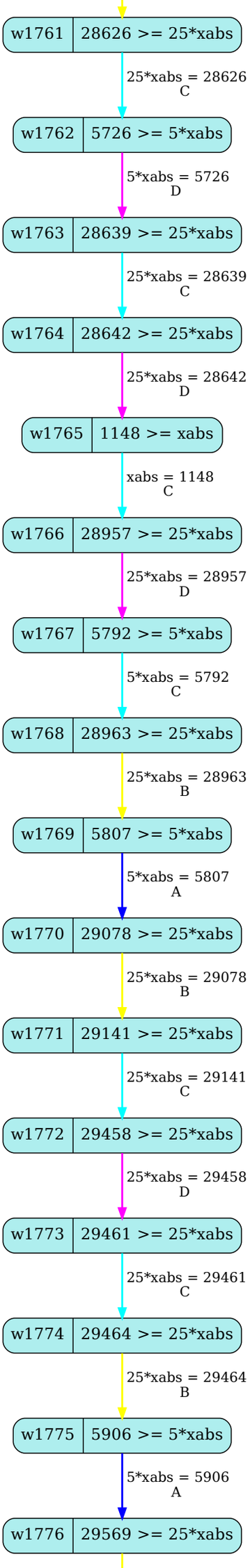
w1761
28626 >= 25*xabs
25*xabs = 28626
C
w1762
5726 >= 5*xabs
5*xabs = 5726
D
w1763
28639 >= 25*xabs
25*xabs = 28639
C
w1764
28642 >= 25*xabs
25*xabs = 28642
D
w1765
1148 >= xabs
xabs = 1148
C
w1766
28957 >= 25*xabs
25*xabs = 28957
D
w1767
5792 >= 5*xabs
5*xabs = 5792
C
w1768
28963 >= 25*xabs
25*xabs = 28963
B
w1769
5807 >= 5*xabs
5*xabs = 5807
A
w1770
29078 >= 25*xabs
25*xabs = 29078
B
w1771
29141 >= 25*xabs
25*xabs = 29141
C
w1772
29458 >= 25*xabs
25*xabs = 29458
D
w1773
29461 >= 25*xabs
25*xabs = 29461
C
w1774
29464 >= 25*xabs
25*xabs = 29464
B
w1775
5906 >= 5*xabs
5*xabs = 5906
A
w1776
29569 >= 25*xabs

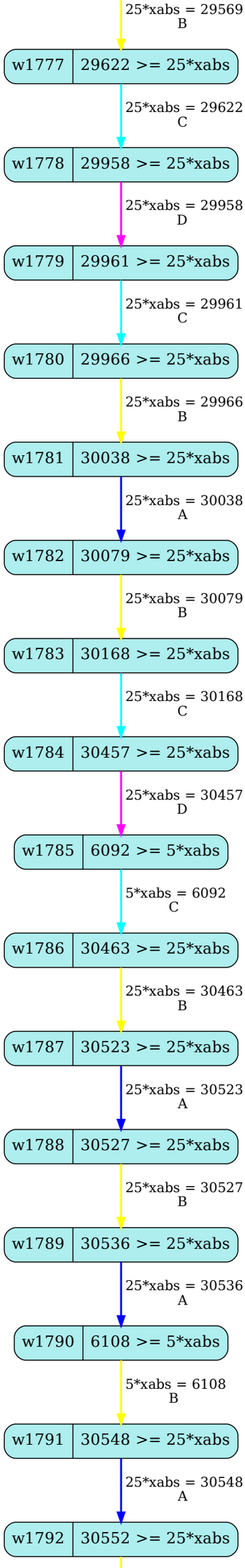
25*xabs = 29569
B
w1777
29622 >= 25*xabs
25*xabs = 29622
C
w1778
29958 >= 25*xabs
25*xabs = 29958
D
w1779
29961 >= 25*xabs
25*xabs = 29961
C
w1780
29966 >= 25*xabs
25*xabs = 29966
B
w1781
30038 >= 25*xabs
25*xabs = 30038
A
w1782
30079 >= 25*xabs
25*xabs = 30079
B
w1783
30168 >= 25*xabs
25*xabs = 30168
C
w1784
30457 >= 25*xabs
25*xabs = 30457
D
w1785
6092 >= 5*xabs
5*xabs = 6092
C
w1786
30463 >= 25*xabs
25*xabs = 30463
B
w1787
30523 >= 25*xabs
25*xabs = 30523
A
w1788
30527 >= 25*xabs
25*xabs = 30527
B
w1789
30536 >= 25*xabs
25*xabs = 30536
A
w1790
6108 >= 5*xabs
5*xabs = 6108
B
w1791
30548 >= 25*xabs
25*xabs = 30548
A
w1792
30552 >= 25*xabs

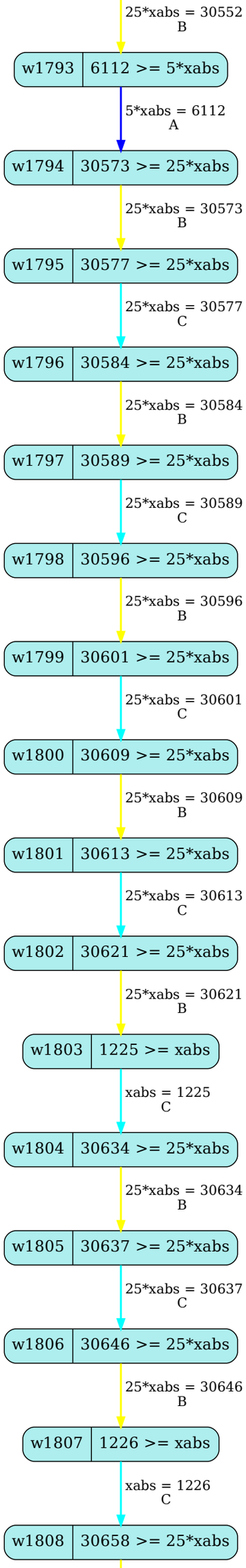
25*xabs = 30552
B
w1793
6112 >= 5*xabs
5*xabs = 6112
A
w1794
30573 >= 25*xabs
25*xabs = 30573
B
w1795
30577 >= 25*xabs
25*xabs = 30577
C
w1796
30584 >= 25*xabs
25*xabs = 30584
B
w1797
30589 >= 25*xabs
25*xabs = 30589
C
w1798
30596 >= 25*xabs
25*xabs = 30596
B
w1799
30601 >= 25*xabs
25*xabs = 30601
C
w1800
30609 >= 25*xabs
25*xabs = 30609
B
w1801
30613 >= 25*xabs
25*xabs = 30613
C
w1802
30621 >= 25*xabs
25*xabs = 30621
B
w1803
1225 >= xabs
xabs = 1225
C
w1804
30634 >= 25*xabs
25*xabs = 30634
B
w1805
30637 >= 25*xabs
25*xabs = 30637
C
w1806
30646 >= 25*xabs
25*xabs = 30646
B
w1807
1226 >= xabs
xabs = 1226
C
w1808
30658 >= 25*xabs

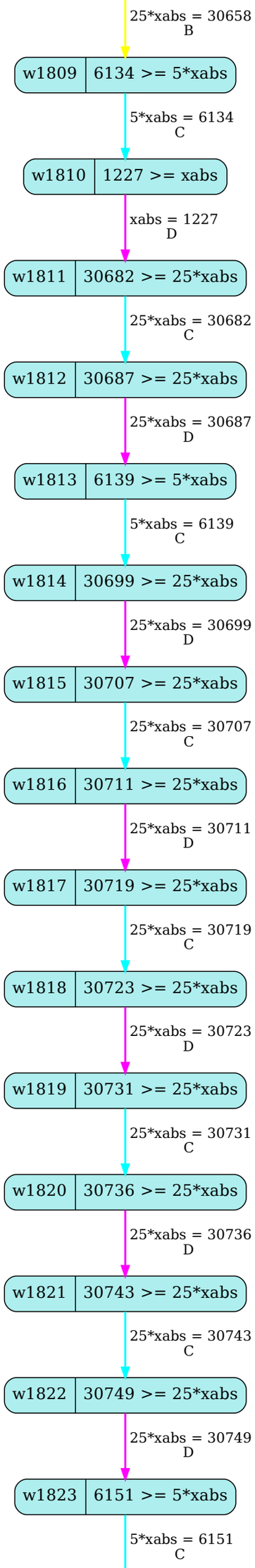
25*xabs = 30658
B
w1809
6134 >= 5*xabs
5*xabs = 6134
C
w1810
1227 >= xabs
xabs = 1227
D
w1811
30682 >= 25*xabs
25*xabs = 30682
C
w1812
30687 >= 25*xabs
25*xabs = 30687
D
w1813
6139 >= 5*xabs
5*xabs = 6139
C
w1814
30699 >= 25*xabs
25*xabs = 30699
D
w1815
30707 >= 25*xabs
25*xabs = 30707
C
w1816
30711 >= 25*xabs
25*xabs = 30711
D
w1817
30719 >= 25*xabs
25*xabs = 30719
C
w1818
30723 >= 25*xabs
25*xabs = 30723
D
w1819
30731 >= 25*xabs
25*xabs = 30731
C
w1820
30736 >= 25*xabs
25*xabs = 30736
D
w1821
30743 >= 25*xabs
25*xabs = 30743
C
w1822
30749 >= 25*xabs
25*xabs = 30749
D
w1823
6151 >= 5*xabs
5*xabs = 6151
C

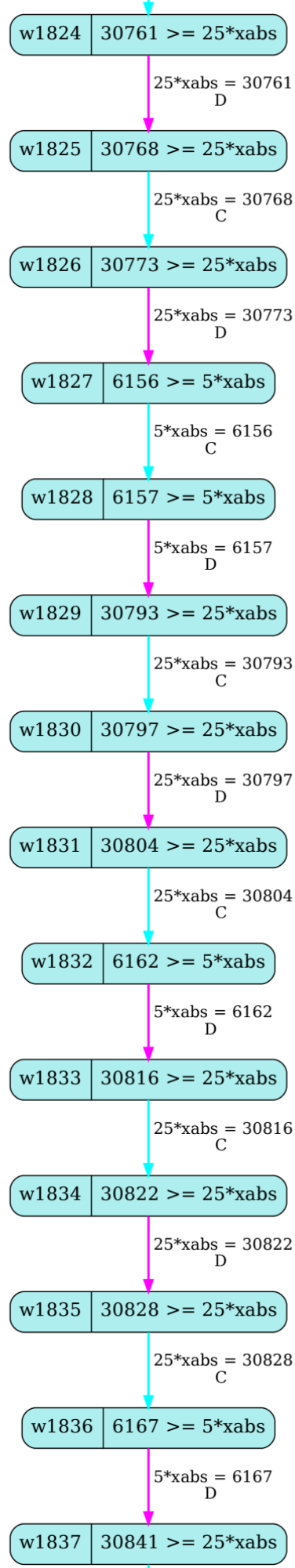
w1824
30761 >= 25*xabs
25*xabs = 30761
D
w1825
30768 >= 25*xabs
25*xabs = 30768
C
w1826
30773 >= 25*xabs
25*xabs = 30773
D
w1827
6156 >= 5*xabs
5*xabs = 6156
C
w1828
6157 >= 5*xabs
5*xabs = 6157
D
w1829
30793 >= 25*xabs
25*xabs = 30793
C
w1830
30797 >= 25*xabs
25*xabs = 30797
D
w1831
30804 >= 25*xabs
25*xabs = 30804
C
w1832
6162 >= 5*xabs
5*xabs = 6162
D
w1833
30816 >= 25*xabs
25*xabs = 30816
C
w1834
30822 >= 25*xabs
25*xabs = 30822
D
w1835
30828 >= 25*xabs
25*xabs = 30828
C
w1836
6167 >= 5*xabs
5*xabs = 6167
D
w1837
30841 >= 25*xabs

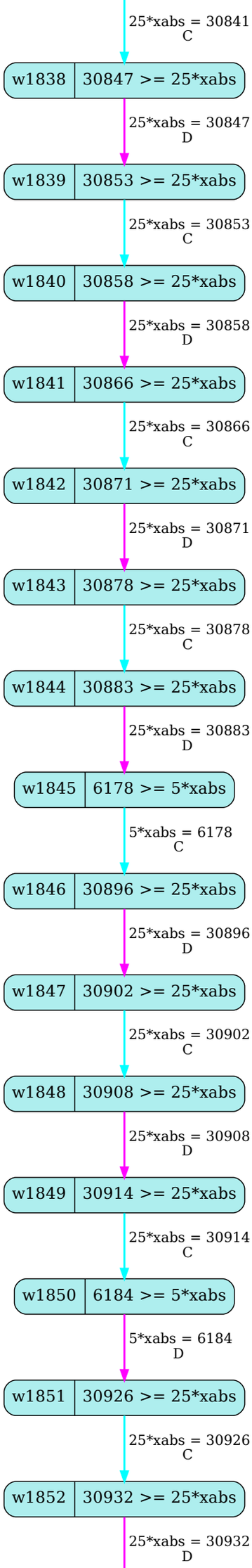
25*xabs = 30841
C
w1838
30847 >= 25*xabs
25*xabs = 30847
D
w1839
30853 >= 25*xabs
25*xabs = 30853
C
w1840
30858 >= 25*xabs
25*xabs = 30858
D
w1841
30866 >= 25*xabs
25*xabs = 30866
C
w1842
30871 >= 25*xabs
25*xabs = 30871
D
w1843
30878 >= 25*xabs
25*xabs = 30878
C
w1844
30883 >= 25*xabs
25*xabs = 30883
D
w1845
6178 >= 5*xabs
5*xabs = 6178
C
w1846
30896 >= 25*xabs
25*xabs = 30896
D
w1847
30902 >= 25*xabs
25*xabs = 30902
C
w1848
30908 >= 25*xabs
25*xabs = 30908
D
w1849
30914 >= 25*xabs
25*xabs = 30914
C
w1850
6184 >= 5*xabs
5*xabs = 6184
D
w1851
30926 >= 25*xabs
25*xabs = 30926
C
w1852
30932 >= 25*xabs
25*xabs = 30932
D

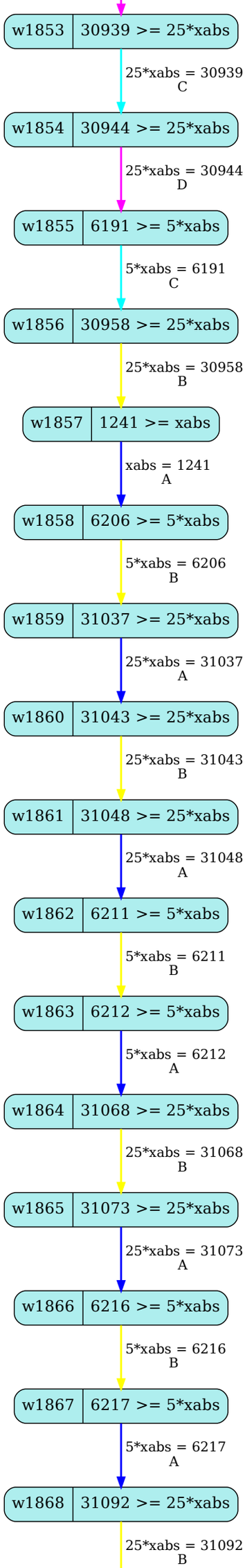
w1853
30939 >= 25*xabs
25*xabs = 30939
C
w1854
30944 >= 25*xabs
25*xabs = 30944
D
w1855
6191 >= 5*xabs
5*xabs = 6191
C
w1856
30958 >= 25*xabs
25*xabs = 30958
B
w1857
1241 >= xabs
xabs = 1241
A
w1858
6206 >= 5*xabs
5*xabs = 6206
B
w1859
31037 >= 25*xabs
25*xabs = 31037
A
w1860
31043 >= 25*xabs
25*xabs = 31043
B
w1861
31048 >= 25*xabs
25*xabs = 31048
A
w1862
6211 >= 5*xabs
5*xabs = 6211
B
w1863
6212 >= 5*xabs
5*xabs = 6212
A
w1864
31068 >= 25*xabs
25*xabs = 31068
B
w1865
31073 >= 25*xabs
25*xabs = 31073
A
w1866
6216 >= 5*xabs
5*xabs = 6216
B
w1867
6217 >= 5*xabs
5*xabs = 6217
A
w1868
31092 >= 25*xabs
25*xabs = 31092
B

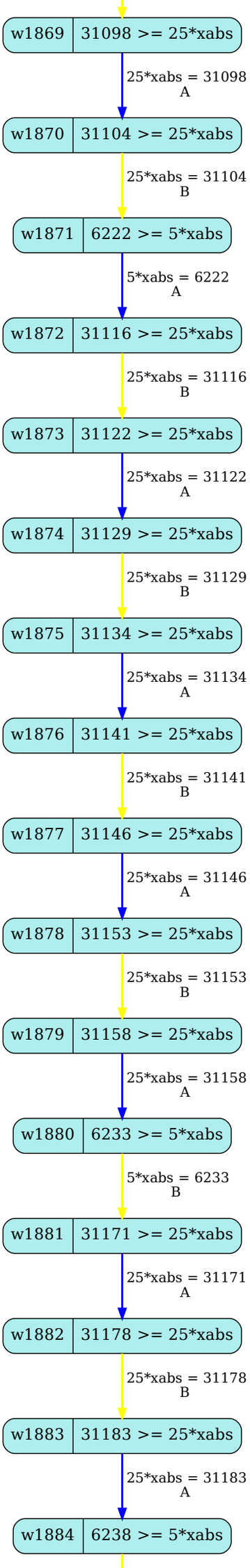
w1869
31098 >= 25*xabs
25*xabs = 31098
A
w1870
31104 >= 25*xabs
25*xabs = 31104
B
w1871
6222 >= 5*xabs
5*xabs = 6222
A
w1872
31116 >= 25*xabs
25*xabs = 31116
B
w1873
31122 >= 25*xabs
25*xabs = 31122
A
w1874
31129 >= 25*xabs
25*xabs = 31129
B
w1875
31134 >= 25*xabs
25*xabs = 31134
A
w1876
31141 >= 25*xabs
25*xabs = 31141
B
w1877
31146 >= 25*xabs
25*xabs = 31146
A
w1878
31153 >= 25*xabs
25*xabs = 31153
B
w1879
31158 >= 25*xabs
25*xabs = 31158
A
w1880
6233 >= 5*xabs
5*xabs = 6233
B
w1881
31171 >= 25*xabs
25*xabs = 31171
A
w1882
31178 >= 25*xabs
25*xabs = 31178
B
w1883
31183 >= 25*xabs
25*xabs = 31183
A
w1884
6238 >= 5*xabs

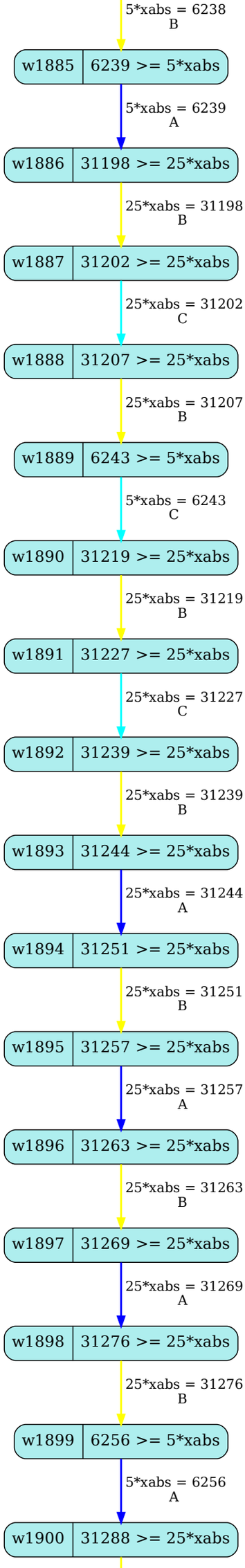
5*xabs = 6238
B
w1885
6239 >= 5*xabs
5*xabs = 6239
A
w1886
31198 >= 25*xabs
25*xabs = 31198
B
w1887
31202 >= 25*xabs
25*xabs = 31202
C
w1888
31207 >= 25*xabs
25*xabs = 31207
B
w1889
6243 >= 5*xabs
5*xabs = 6243
C
w1890
31219 >= 25*xabs
25*xabs = 31219
B
w1891
31227 >= 25*xabs
25*xabs = 31227
C
w1892
31239 >= 25*xabs
25*xabs = 31239
B
w1893
31244 >= 25*xabs
25*xabs = 31244
A
w1894
31251 >= 25*xabs
25*xabs = 31251
B
w1895
31257 >= 25*xabs
25*xabs = 31257
A
w1896
31263 >= 25*xabs
25*xabs = 31263
B
w1897
31269 >= 25*xabs
25*xabs = 31269
A
w1898
31276 >= 25*xabs
25*xabs = 31276
B
w1899
6256 >= 5*xabs
5*xabs = 6256
A
w1900
31288 >= 25*xabs

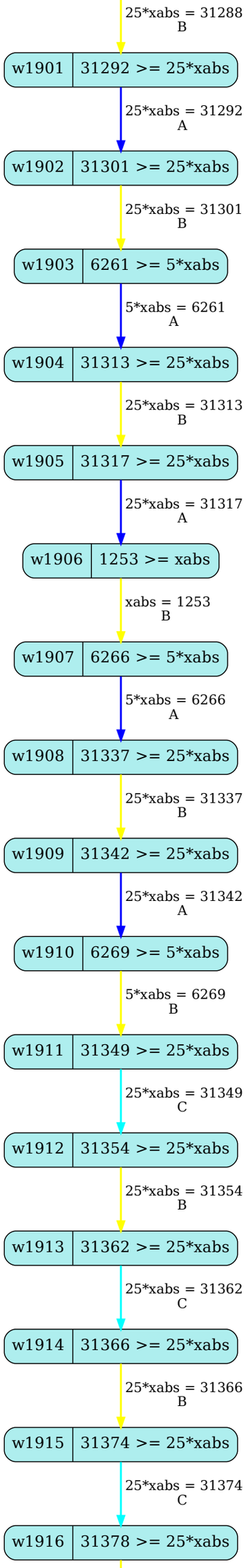
25*xabs = 31288
B
w1901
31292 >= 25*xabs
25*xabs = 31292
A
w1902
31301 >= 25*xabs
25*xabs = 31301
B
w1903
6261 >= 5*xabs
5*xabs = 6261
A
w1904
31313 >= 25*xabs
25*xabs = 31313
B
w1905
31317 >= 25*xabs
25*xabs = 31317
A
w1906
1253 >= xabs
xabs = 1253
B
w1907
6266 >= 5*xabs
5*xabs = 6266
A
w1908
31337 >= 25*xabs
25*xabs = 31337
B
w1909
31342 >= 25*xabs
25*xabs = 31342
A
w1910
6269 >= 5*xabs
5*xabs = 6269
B
w1911
31349 >= 25*xabs
25*xabs = 31349
C
w1912
31354 >= 25*xabs
25*xabs = 31354
B
w1913
31362 >= 25*xabs
25*xabs = 31362
C
w1914
31366 >= 25*xabs
25*xabs = 31366
B
w1915
31374 >= 25*xabs
25*xabs = 31374
C
w1916
31378 >= 25*xabs

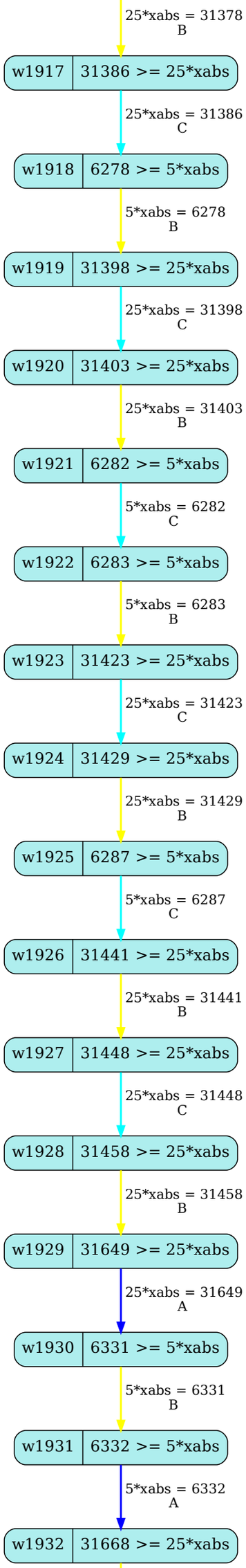
25*xabs = 31378
B
w1917
31386 >= 25*xabs
25*xabs = 31386
C
w1918
6278 >= 5*xabs
5*xabs = 6278
B
w1919
31398 >= 25*xabs
25*xabs = 31398
C
w1920
31403 >= 25*xabs
25*xabs = 31403
B
w1921
6282 >= 5*xabs
5*xabs = 6282
C
w1922
6283 >= 5*xabs
5*xabs = 6283
B
w1923
31423 >= 25*xabs
25*xabs = 31423
C
w1924
31429 >= 25*xabs
25*xabs = 31429
B
w1925
6287 >= 5*xabs
5*xabs = 6287
C
w1926
31441 >= 25*xabs
25*xabs = 31441
B
w1927
31448 >= 25*xabs
25*xabs = 31448
C
w1928
31458 >= 25*xabs
25*xabs = 31458
B
w1929
31649 >= 25*xabs
25*xabs = 31649
A
w1930
6331 >= 5*xabs
5*xabs = 6331
B
w1931
6332 >= 5*xabs
5*xabs = 6332
A
w1932
31668 >= 25*xabs

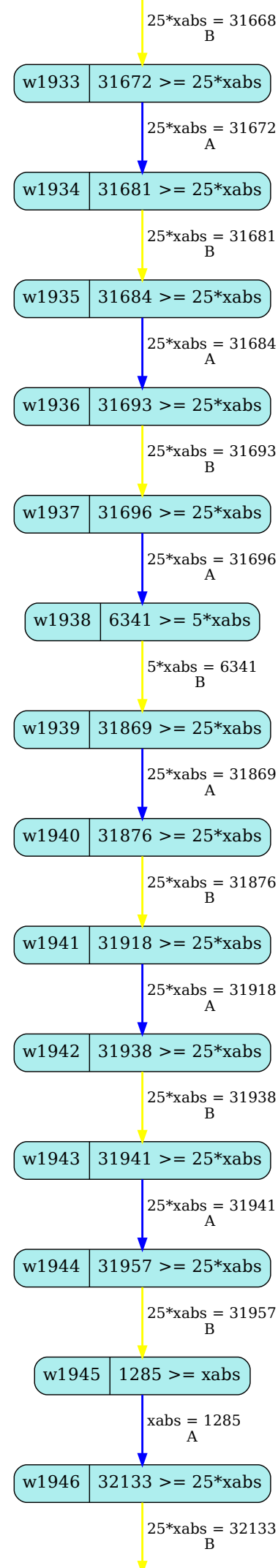
25*xabs = 31668
B
w1933
31672 >= 25*xabs
25*xabs = 31672
A
w1934
31681 >= 25*xabs
25*xabs = 31681
B
w1935
31684 >= 25*xabs
25*xabs = 31684
A
w1936
31693 >= 25*xabs
25*xabs = 31693
B
w1937
31696 >= 25*xabs
25*xabs = 31696
A
w1938
6341 >= 5*xabs
5*xabs = 6341
B
w1939
31869 >= 25*xabs
25*xabs = 31869
A
w1940
31876 >= 25*xabs
25*xabs = 31876
B
w1941
31918 >= 25*xabs
25*xabs = 31918
A
w1942
31938 >= 25*xabs
25*xabs = 31938
B
w1943
31941 >= 25*xabs
25*xabs = 31941
A
w1944
31957 >= 25*xabs
25*xabs = 31957
B
w1945
1285 >= xabs
xabs = 1285
A
w1946
32133 >= 25*xabs
25*xabs = 32133
B

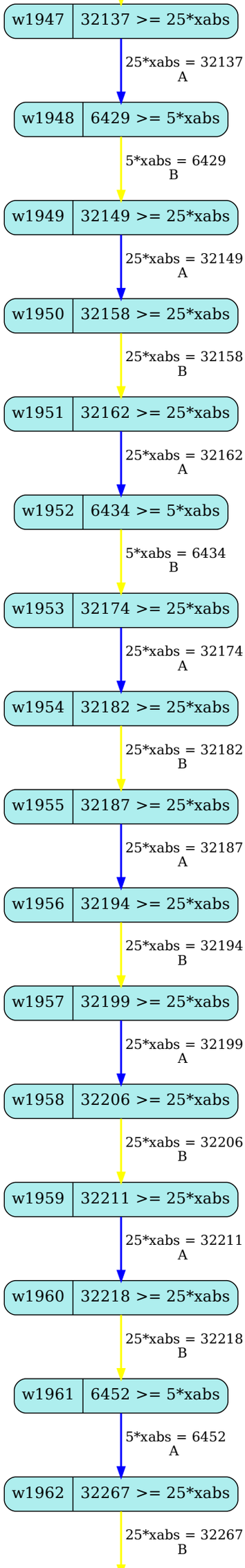
w1947
32137 >= 25*xabs
25*xabs = 32137
A
w1948
6429 >= 5*xabs
5*xabs = 6429
B
w1949
32149 >= 25*xabs
25*xabs = 32149
A
w1950
32158 >= 25*xabs
25*xabs = 32158
B
w1951
32162 >= 25*xabs
25*xabs = 32162
A
w1952
6434 >= 5*xabs
5*xabs = 6434
B
w1953
32174 >= 25*xabs
25*xabs = 32174
A
w1954
32182 >= 25*xabs
25*xabs = 32182
B
w1955
32187 >= 25*xabs
25*xabs = 32187
A
w1956
32194 >= 25*xabs
25*xabs = 32194
B
w1957
32199 >= 25*xabs
25*xabs = 32199
A
w1958
32206 >= 25*xabs
25*xabs = 32206
B
w1959
32211 >= 25*xabs
25*xabs = 32211
A
w1960
32218 >= 25*xabs
25*xabs = 32218
B
w1961
6452 >= 5*xabs
5*xabs = 6452
A
w1962
32267 >= 25*xabs
25*xabs = 32267
B

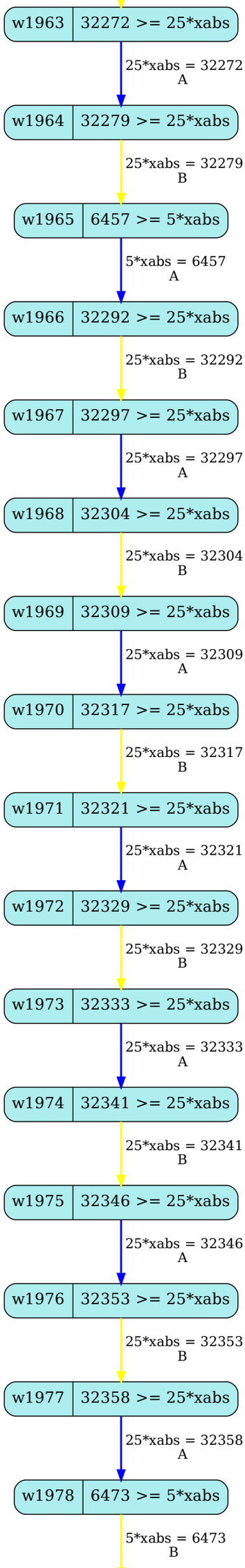
w1963
32272 >= 25*xabs
25*xabs = 32272
A
w1964
32279 >= 25*xabs
25*xabs = 32279
B
w1965
6457 >= 5*xabs
5*xabs = 6457
A
w1966
32292 >= 25*xabs
25*xabs = 32292
B
w1967
32297 >= 25*xabs
25*xabs = 32297
A
w1968
32304 >= 25*xabs
25*xabs = 32304
B
w1969
32309 >= 25*xabs
25*xabs = 32309
A
w1970
32317 >= 25*xabs
25*xabs = 32317
B
w1971
32321 >= 25*xabs
25*xabs = 32321
A
w1972
32329 >= 25*xabs
25*xabs = 32329
B
w1973
32333 >= 25*xabs
25*xabs = 32333
A
w1974
32341 >= 25*xabs
25*xabs = 32341
B
w1975
32346 >= 25*xabs
25*xabs = 32346
A
w1976
32353 >= 25*xabs
25*xabs = 32353
B
w1977
32358 >= 25*xabs
25*xabs = 32358
A
w1978
6473 >= 5*xabs
5*xabs = 6473
B

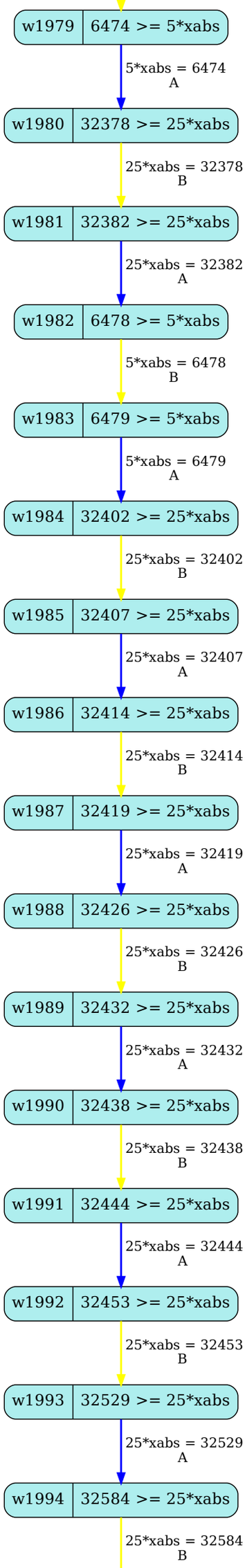
w1979
6474 >= 5*xabs
5*xabs = 6474
A
w1980
32378 >= 25*xabs
25*xabs = 32378
B
w1981
32382 >= 25*xabs
25*xabs = 32382
A
w1982
6478 >= 5*xabs
5*xabs = 6478
B
w1983
6479 >= 5*xabs
5*xabs = 6479
A
w1984
32402 >= 25*xabs
25*xabs = 32402
B
w1985
32407 >= 25*xabs
25*xabs = 32407
A
w1986
32414 >= 25*xabs
25*xabs = 32414
B
w1987
32419 >= 25*xabs
25*xabs = 32419
A
w1988
32426 >= 25*xabs
25*xabs = 32426
B
w1989
32432 >= 25*xabs
25*xabs = 32432
A
w1990
32438 >= 25*xabs
25*xabs = 32438
B
w1991
32444 >= 25*xabs
25*xabs = 32444
A
w1992
32453 >= 25*xabs
25*xabs = 32453
B
w1993
32529 >= 25*xabs
25*xabs = 32529
A
w1994
32584 >= 25*xabs
25*xabs = 32584
B

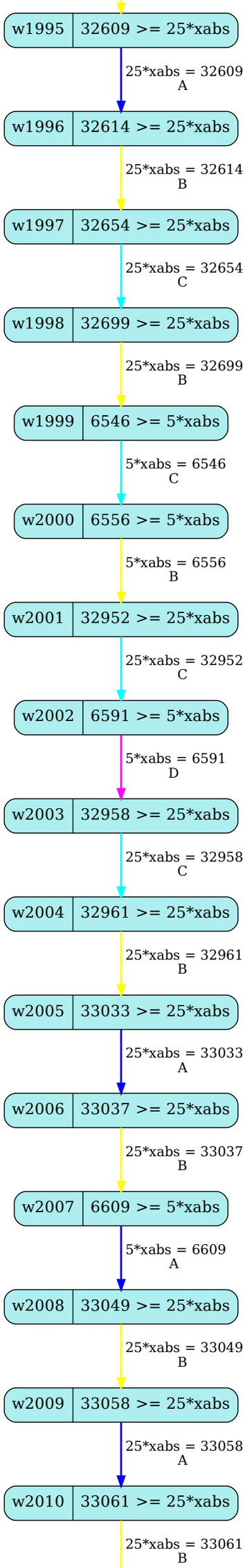
w1995
32609 >= 25*xabs
25*xabs = 32609
A
w1996
32614 >= 25*xabs
25*xabs = 32614
B
w1997
32654 >= 25*xabs
25*xabs = 32654
C
w1998
32699 >= 25*xabs
25*xabs = 32699
B
w1999
6546 >= 5*xabs
5*xabs = 6546
C
w2000
6556 >= 5*xabs
5*xabs = 6556
B
w2001
32952 >= 25*xabs
25*xabs = 32952
C
w2002
6591 >= 5*xabs
5*xabs = 6591
D
w2003
32958 >= 25*xabs
25*xabs = 32958
C
w2004
32961 >= 25*xabs
25*xabs = 32961
B
w2005
33033 >= 25*xabs
25*xabs = 33033
A
w2006
33037 >= 25*xabs
25*xabs = 33037
B
w2007
6609 >= 5*xabs
5*xabs = 6609
A
w2008
33049 >= 25*xabs
25*xabs = 33049
B
w2009
33058 >= 25*xabs
25*xabs = 33058
A
w2010
33061 >= 25*xabs
25*xabs = 33061
B

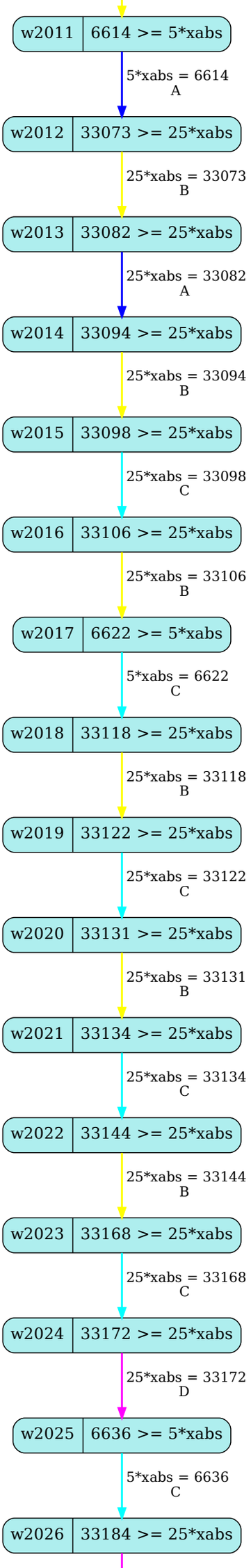
w2011
6614 >= 5*xabs
5*xabs = 6614
A
w2012
33073 >= 25*xabs
25*xabs = 33073
B
w2013
33082 >= 25*xabs
25*xabs = 33082
A
w2014
33094 >= 25*xabs
25*xabs = 33094
B
w2015
33098 >= 25*xabs
25*xabs = 33098
C
w2016
33106 >= 25*xabs
25*xabs = 33106
B
w2017
6622 >= 5*xabs
5*xabs = 6622
C
w2018
33118 >= 25*xabs
25*xabs = 33118
B
w2019
33122 >= 25*xabs
25*xabs = 33122
C
w2020
33131 >= 25*xabs
25*xabs = 33131
B
w2021
33134 >= 25*xabs
25*xabs = 33134
C
w2022
33144 >= 25*xabs
25*xabs = 33144
B
w2023
33168 >= 25*xabs
25*xabs = 33168
C
w2024
33172 >= 25*xabs
25*xabs = 33172
D
w2025
6636 >= 5*xabs
5*xabs = 6636
C
w2026
33184 >= 25*xabs

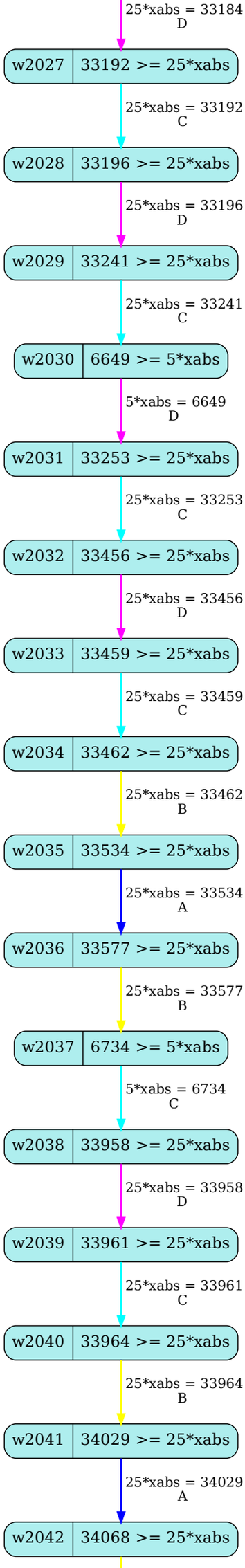
25*xabs = 33184
D
w2027
33192 >= 25*xabs
25*xabs = 33192
C
w2028
33196 >= 25*xabs
25*xabs = 33196
D
w2029
33241 >= 25*xabs
25*xabs = 33241
C
w2030
6649 >= 5*xabs
5*xabs = 6649
D
w2031
33253 >= 25*xabs
25*xabs = 33253
C
w2032
33456 >= 25*xabs
25*xabs = 33456
D
w2033
33459 >= 25*xabs
25*xabs = 33459
C
w2034
33462 >= 25*xabs
25*xabs = 33462
B
w2035
33534 >= 25*xabs
25*xabs = 33534
A
w2036
33577 >= 25*xabs
25*xabs = 33577
B
w2037
6734 >= 5*xabs
5*xabs = 6734
C
w2038
33958 >= 25*xabs
25*xabs = 33958
D
w2039
33961 >= 25*xabs
25*xabs = 33961
C
w2040
33964 >= 25*xabs
25*xabs = 33964
B
w2041
34029 >= 25*xabs
25*xabs = 34029
A
w2042
34068 >= 25*xabs

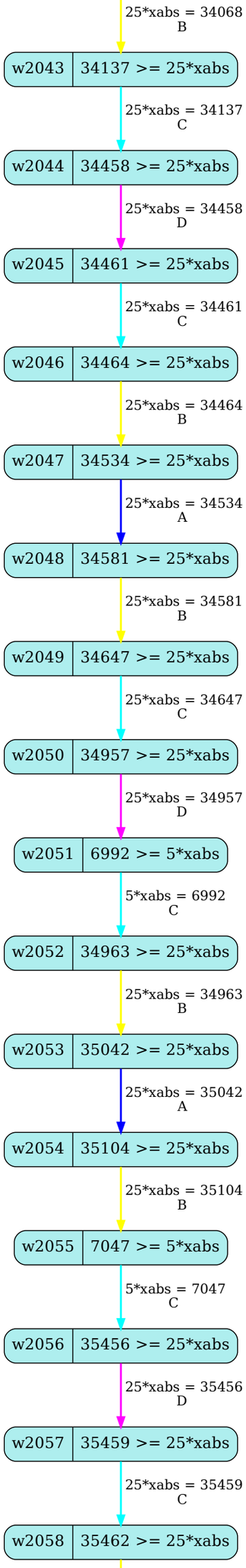
25*xabs = 34068
B
w2043
34137 >= 25*xabs
25*xabs = 34137
C
w2044
34458 >= 25*xabs
25*xabs = 34458
D
w2045
34461 >= 25*xabs
25*xabs = 34461
C
w2046
34464 >= 25*xabs
25*xabs = 34464
B
w2047
34534 >= 25*xabs
25*xabs = 34534
A
w2048
34581 >= 25*xabs
25*xabs = 34581
B
w2049
34647 >= 25*xabs
25*xabs = 34647
C
w2050
34957 >= 25*xabs
25*xabs = 34957
D
w2051
6992 >= 5*xabs
5*xabs = 6992
C
w2052
34963 >= 25*xabs
25*xabs = 34963
B
w2053
35042 >= 25*xabs
25*xabs = 35042
A
w2054
35104 >= 25*xabs
25*xabs = 35104
B
w2055
7047 >= 5*xabs
5*xabs = 7047
C
w2056
35456 >= 25*xabs
25*xabs = 35456
D
w2057
35459 >= 25*xabs
25*xabs = 35459
C
w2058
35462 >= 25*xabs

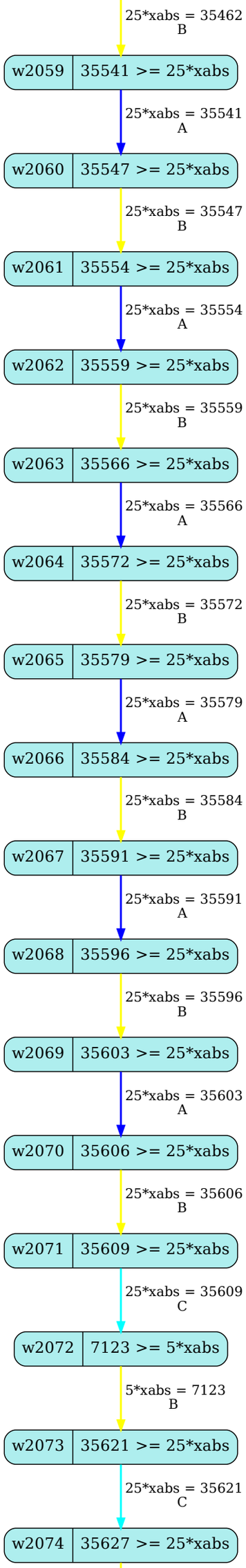
25*xabs = 35462
B
w2059
35541 >= 25*xabs
25*xabs = 35541
A
w2060
35547 >= 25*xabs
25*xabs = 35547
B
w2061
35554 >= 25*xabs
25*xabs = 35554
A
w2062
35559 >= 25*xabs
25*xabs = 35559
B
w2063
35566 >= 25*xabs
25*xabs = 35566
A
w2064
35572 >= 25*xabs
25*xabs = 35572
B
w2065
35579 >= 25*xabs
25*xabs = 35579
A
w2066
35584 >= 25*xabs
25*xabs = 35584
B
w2067
35591 >= 25*xabs
25*xabs = 35591
A
w2068
35596 >= 25*xabs
25*xabs = 35596
B
w2069
35603 >= 25*xabs
25*xabs = 35603
A
w2070
35606 >= 25*xabs
25*xabs = 35606
B
w2071
35609 >= 25*xabs
25*xabs = 35609
C
w2072
7123 >= 5*xabs
5*xabs = 7123
B
w2073
35621 >= 25*xabs
25*xabs = 35621
C
w2074
35627 >= 25*xabs

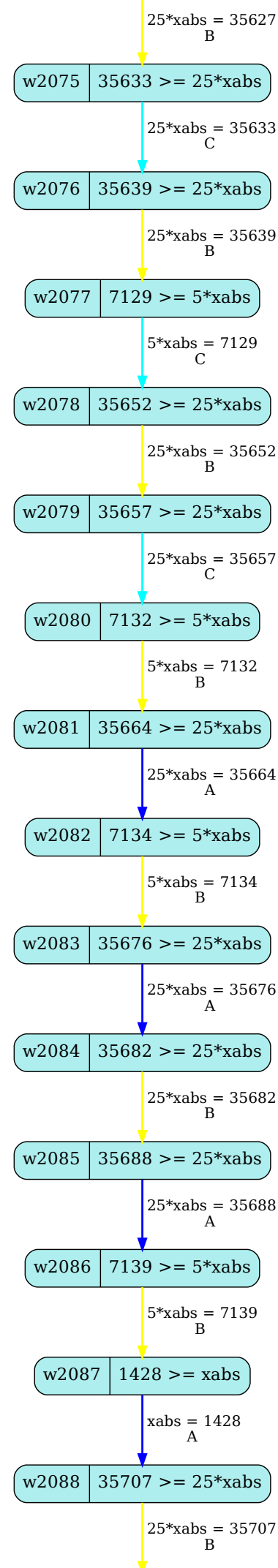
25*xabs = 35627
B
w2075
35633 >= 25*xabs
25*xabs = 35633
C
w2076
35639 >= 25*xabs
25*xabs = 35639
B
w2077
7129 >= 5*xabs
5*xabs = 7129
C
w2078
35652 >= 25*xabs
25*xabs = 35652
B
w2079
35657 >= 25*xabs
25*xabs = 35657
C
w2080
7132 >= 5*xabs
5*xabs = 7132
B
w2081
35664 >= 25*xabs
25*xabs = 35664
A
w2082
7134 >= 5*xabs
5*xabs = 7134
B
w2083
35676 >= 25*xabs
25*xabs = 35676
A
w2084
35682 >= 25*xabs
25*xabs = 35682
B
w2085
35688 >= 25*xabs
25*xabs = 35688
A
w2086
7139 >= 5*xabs
5*xabs = 7139
B
w2087
1428 >= xabs
xabs = 1428
A
w2088
35707 >= 25*xabs
25*xabs = 35707
B

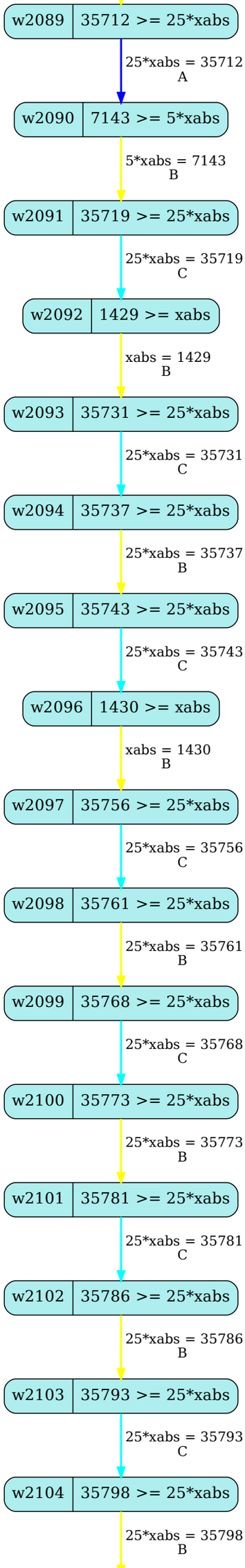
w2089
35712 >= 25*xabs
25*xabs = 35712
A
w2090
7143 >= 5*xabs
5*xabs = 7143
B
w2091
35719 >= 25*xabs
25*xabs = 35719
C
w2092
1429 >= xabs
xabs = 1429
B
w2093
35731 >= 25*xabs
25*xabs = 35731
C
w2094
35737 >= 25*xabs
25*xabs = 35737
B
w2095
35743 >= 25*xabs
25*xabs = 35743
C
w2096
1430 >= xabs
xabs = 1430
B
w2097
35756 >= 25*xabs
25*xabs = 35756
C
w2098
35761 >= 25*xabs
25*xabs = 35761
B
w2099
35768 >= 25*xabs
25*xabs = 35768
C
w2100
35773 >= 25*xabs
25*xabs = 35773
B
w2101
35781 >= 25*xabs
25*xabs = 35781
C
w2102
35786 >= 25*xabs
25*xabs = 35786
B
w2103
35793 >= 25*xabs
25*xabs = 35793
C
w2104
35798 >= 25*xabs
25*xabs = 35798
B

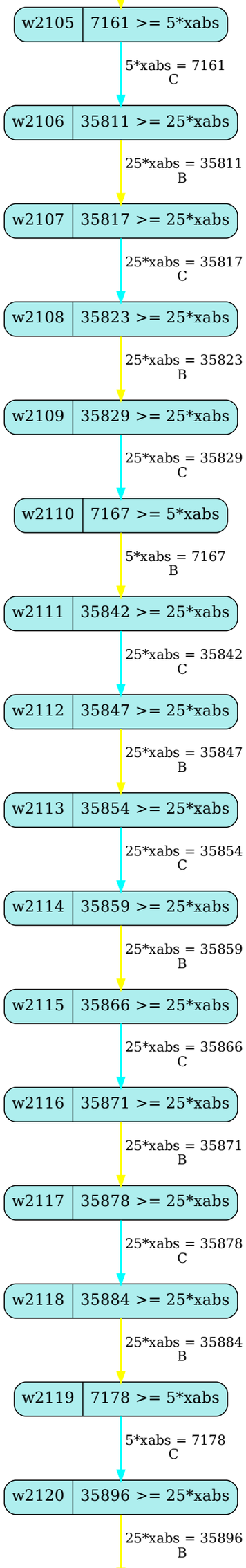
w2105
7161 >= 5*xabs
5*xabs = 7161
C
w2106
35811 >= 25*xabs
25*xabs = 35811
B
w2107
35817 >= 25*xabs
25*xabs = 35817
C
w2108
35823 >= 25*xabs
25*xabs = 35823
B
w2109
35829 >= 25*xabs
25*xabs = 35829
C
w2110
7167 >= 5*xabs
5*xabs = 7167
B
w2111
35842 >= 25*xabs
25*xabs = 35842
C
w2112
35847 >= 25*xabs
25*xabs = 35847
B
w2113
35854 >= 25*xabs
25*xabs = 35854
C
w2114
35859 >= 25*xabs
25*xabs = 35859
B
w2115
35866 >= 25*xabs
25*xabs = 35866
C
w2116
35871 >= 25*xabs
25*xabs = 35871
B
w2117
35878 >= 25*xabs
25*xabs = 35878
C
w2118
35884 >= 25*xabs
25*xabs = 35884
B
w2119
7178 >= 5*xabs
5*xabs = 7178
C
w2120
35896 >= 25*xabs
25*xabs = 35896
B

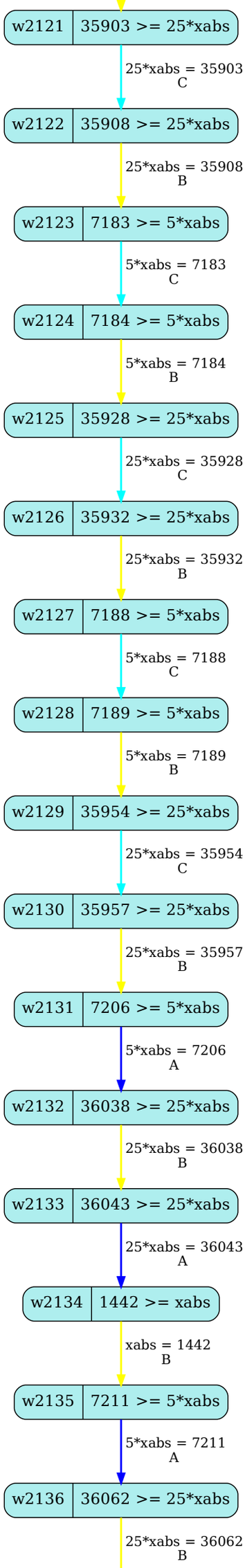
w2121
35903 >= 25*xabs
25*xabs = 35903
C
w2122
35908 >= 25*xabs
25*xabs = 35908
B
w2123
7183 >= 5*xabs
5*xabs = 7183
C
w2124
7184 >= 5*xabs
5*xabs = 7184
B
w2125
35928 >= 25*xabs
25*xabs = 35928
C
w2126
35932 >= 25*xabs
25*xabs = 35932
B
w2127
7188 >= 5*xabs
5*xabs = 7188
C
w2128
7189 >= 5*xabs
5*xabs = 7189
B
w2129
35954 >= 25*xabs
25*xabs = 35954
C
w2130
35957 >= 25*xabs
25*xabs = 35957
B
w2131
7206 >= 5*xabs
5*xabs = 7206
A
w2132
36038 >= 25*xabs
25*xabs = 36038
B
w2133
36043 >= 25*xabs
25*xabs = 36043
A
w2134
1442 >= xabs
xabs = 1442
B
w2135
7211 >= 5*xabs
5*xabs = 7211
A
w2136
36062 >= 25*xabs
25*xabs = 36062
B

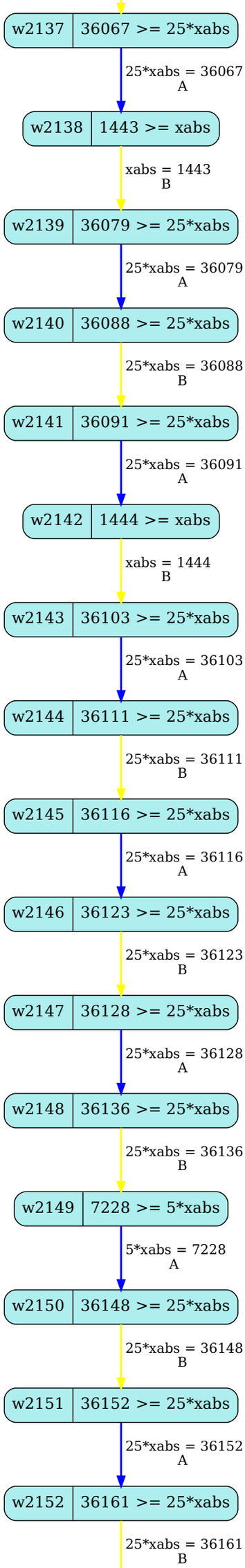
w2137
36067 >= 25*xabs
25*xabs = 36067
A
w2138
1443 >= xabs
xabs = 1443
B
w2139
36079 >= 25*xabs
25*xabs = 36079
A
w2140
36088 >= 25*xabs
25*xabs = 36088
B
w2141
36091 >= 25*xabs
25*xabs = 36091
A
w2142
1444 >= xabs
xabs = 1444
B
w2143
36103 >= 25*xabs
25*xabs = 36103
A
w2144
36111 >= 25*xabs
25*xabs = 36111
B
w2145
36116 >= 25*xabs
25*xabs = 36116
A
w2146
36123 >= 25*xabs
25*xabs = 36123
B
w2147
36128 >= 25*xabs
25*xabs = 36128
A
w2148
36136 >= 25*xabs
25*xabs = 36136
B
w2149
7228 >= 5*xabs
5*xabs = 7228
A
w2150
36148 >= 25*xabs
25*xabs = 36148
B
w2151
36152 >= 25*xabs
25*xabs = 36152
A
w2152
36161 >= 25*xabs
25*xabs = 36161
B

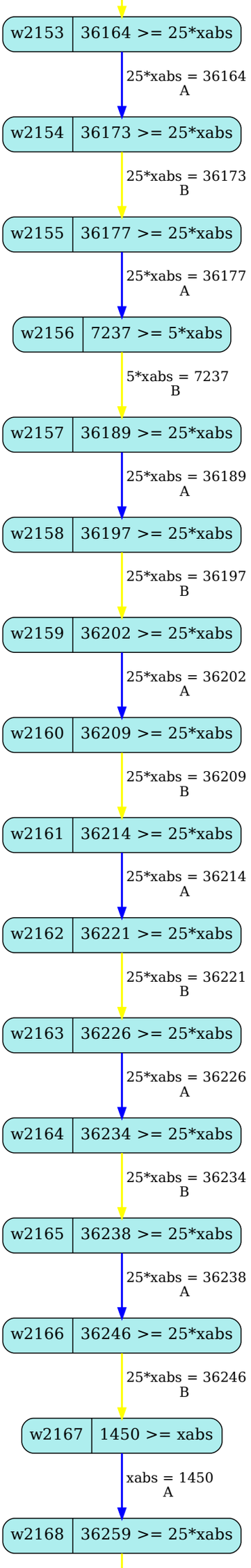
w2153
36164 >= 25*xabs
25*xabs = 36164
A
w2154
36173 >= 25*xabs
25*xabs = 36173
B
w2155
36177 >= 25*xabs
25*xabs = 36177
A
w2156
7237 >= 5*xabs
5*xabs = 7237
B
w2157
36189 >= 25*xabs
25*xabs = 36189
A
w2158
36197 >= 25*xabs
25*xabs = 36197
B
w2159
36202 >= 25*xabs
25*xabs = 36202
A
w2160
36209 >= 25*xabs
25*xabs = 36209
B
w2161
36214 >= 25*xabs
25*xabs = 36214
A
w2162
36221 >= 25*xabs
25*xabs = 36221
B
w2163
36226 >= 25*xabs
25*xabs = 36226
A
w2164
36234 >= 25*xabs
25*xabs = 36234
B
w2165
36238 >= 25*xabs
25*xabs = 36238
A
w2166
36246 >= 25*xabs
25*xabs = 36246
B
w2167
1450 >= xabs
xabs = 1450
A
w2168
36259 >= 25*xabs

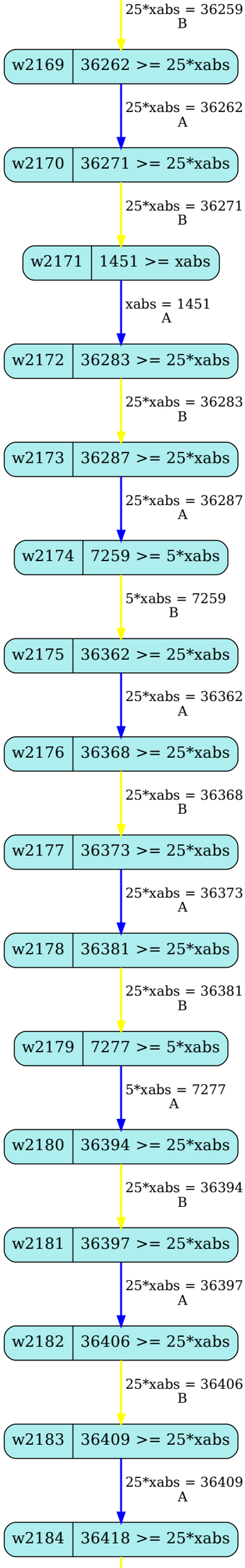
25*xabs = 36259
B
w2169
36262 >= 25*xabs
25*xabs = 36262
A
w2170
36271 >= 25*xabs
25*xabs = 36271
B
w2171
1451 >= xabs
xabs = 1451
A
w2172
36283 >= 25*xabs
25*xabs = 36283
B
w2173
36287 >= 25*xabs
25*xabs = 36287
A
w2174
7259 >= 5*xabs
5*xabs = 7259
B
w2175
36362 >= 25*xabs
25*xabs = 36362
A
w2176
36368 >= 25*xabs
25*xabs = 36368
B
w2177
36373 >= 25*xabs
25*xabs = 36373
A
w2178
36381 >= 25*xabs
25*xabs = 36381
B
w2179
7277 >= 5*xabs
5*xabs = 7277
A
w2180
36394 >= 25*xabs
25*xabs = 36394
B
w2181
36397 >= 25*xabs
25*xabs = 36397
A
w2182
36406 >= 25*xabs
25*xabs = 36406
B
w2183
36409 >= 25*xabs
25*xabs = 36409
A
w2184
36418 >= 25*xabs

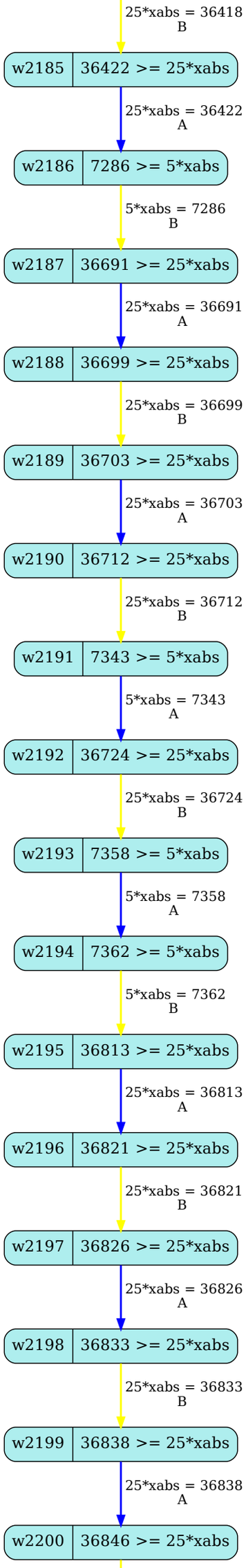
25*xabs = 36418
B
w2185
36422 >= 25*xabs
25*xabs = 36422
A
w2186
7286 >= 5*xabs
5*xabs = 7286
B
w2187
36691 >= 25*xabs
25*xabs = 36691
A
w2188
36699 >= 25*xabs
25*xabs = 36699
B
w2189
36703 >= 25*xabs
25*xabs = 36703
A
w2190
36712 >= 25*xabs
25*xabs = 36712
B
w2191
7343 >= 5*xabs
5*xabs = 7343
A
w2192
36724 >= 25*xabs
25*xabs = 36724
B
w2193
7358 >= 5*xabs
5*xabs = 7358
A
w2194
7362 >= 5*xabs
5*xabs = 7362
B
w2195
36813 >= 25*xabs
25*xabs = 36813
A
w2196
36821 >= 25*xabs
25*xabs = 36821
B
w2197
36826 >= 25*xabs
25*xabs = 36826
A
w2198
36833 >= 25*xabs
25*xabs = 36833
B
w2199
36838 >= 25*xabs
25*xabs = 36838
A
w2200
36846 >= 25*xabs

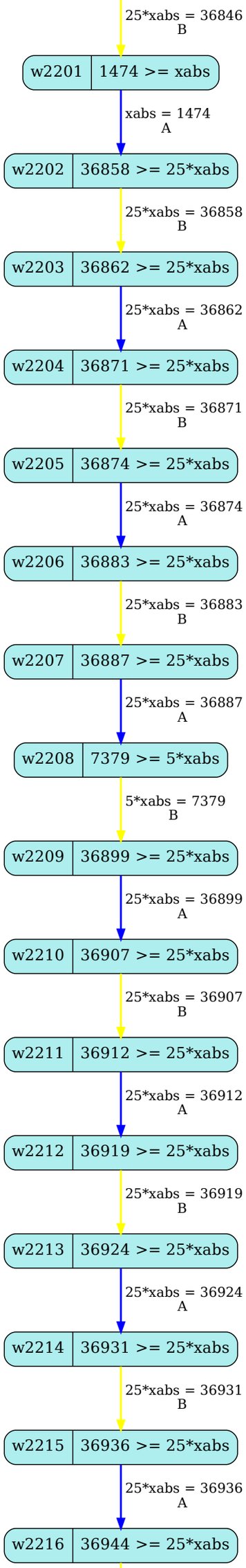
25*xabs = 36846
B
w2201
1474 >= xabs
xabs = 1474
A
w2202
36858 >= 25*xabs
25*xabs = 36858
B
w2203
36862 >= 25*xabs
25*xabs = 36862
A
w2204
36871 >= 25*xabs
25*xabs = 36871
B
w2205
36874 >= 25*xabs
25*xabs = 36874
A
w2206
36883 >= 25*xabs
25*xabs = 36883
B
w2207
36887 >= 25*xabs
25*xabs = 36887
A
w2208
7379 >= 5*xabs
5*xabs = 7379
B
w2209
36899 >= 25*xabs
25*xabs = 36899
A
w2210
36907 >= 25*xabs
25*xabs = 36907
B
w2211
36912 >= 25*xabs
25*xabs = 36912
A
w2212
36919 >= 25*xabs
25*xabs = 36919
B
w2213
36924 >= 25*xabs
25*xabs = 36924
A
w2214
36931 >= 25*xabs
25*xabs = 36931
B
w2215
36936 >= 25*xabs
25*xabs = 36936
A
w2216
36944 >= 25*xabs

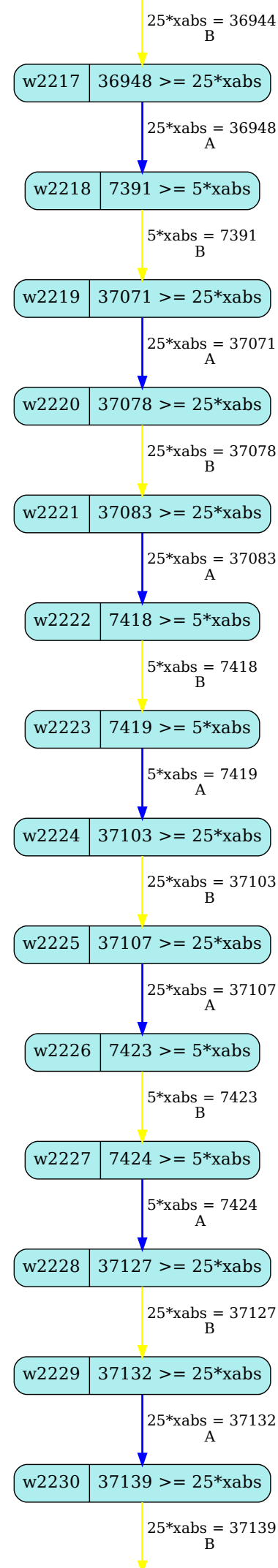
25*xabs = 36944
B
w2217
36948 >= 25*xabs
25*xabs = 36948
A
w2218
7391 >= 5*xabs
5*xabs = 7391
B
w2219
37071 >= 25*xabs
25*xabs = 37071
A
w2220
37078 >= 25*xabs
25*xabs = 37078
B
w2221
37083 >= 25*xabs
25*xabs = 37083
A
w2222
7418 >= 5*xabs
5*xabs = 7418
B
w2223
7419 >= 5*xabs
5*xabs = 7419
A
w2224
37103 >= 25*xabs
25*xabs = 37103
B
w2225
37107 >= 25*xabs
25*xabs = 37107
A
w2226
7423 >= 5*xabs
5*xabs = 7423
B
w2227
7424 >= 5*xabs
5*xabs = 7424
A
w2228
37127 >= 25*xabs
25*xabs = 37127
B
w2229
37132 >= 25*xabs
25*xabs = 37132
A
w2230
37139 >= 25*xabs
25*xabs = 37139
B

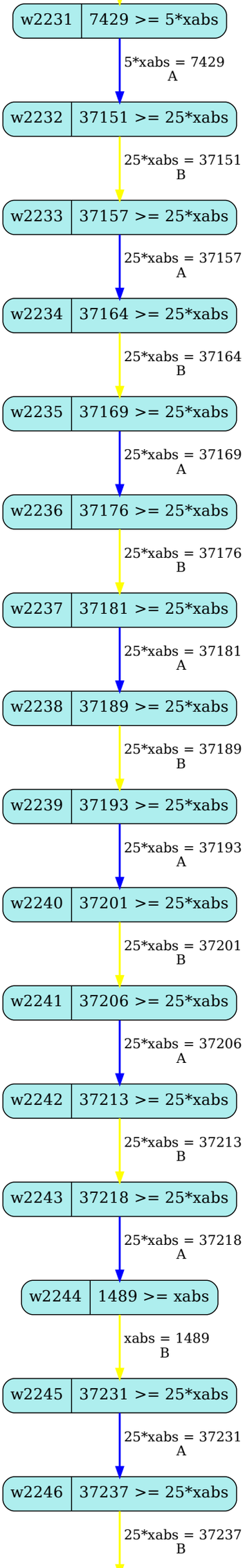
w2231
7429 >= 5*xabs
5*xabs = 7429
A
w2232
37151 >= 25*xabs
25*xabs = 37151
B
w2233
37157 >= 25*xabs
25*xabs = 37157
A
w2234
37164 >= 25*xabs
25*xabs = 37164
B
w2235
37169 >= 25*xabs
25*xabs = 37169
A
w2236
37176 >= 25*xabs
25*xabs = 37176
B
w2237
37181 >= 25*xabs
25*xabs = 37181
A
w2238
37189 >= 25*xabs
25*xabs = 37189
B
w2239
37193 >= 25*xabs
25*xabs = 37193
A
w2240
37201 >= 25*xabs
25*xabs = 37201
B
w2241
37206 >= 25*xabs
25*xabs = 37206
A
w2242
37213 >= 25*xabs
25*xabs = 37213
B
w2243
37218 >= 25*xabs
25*xabs = 37218
A
w2244
1489 >= xabs
xabs = 1489
B
w2245
37231 >= 25*xabs
25*xabs = 37231
A
w2246
37237 >= 25*xabs
25*xabs = 37237
B

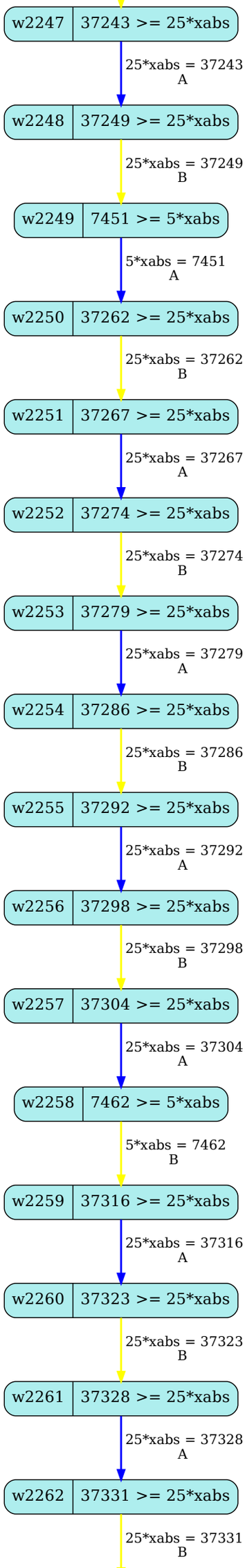
w2247
37243 >= 25*xabs
25*xabs = 37243
A
w2248
37249 >= 25*xabs
25*xabs = 37249
B
w2249
7451 >= 5*xabs
5*xabs = 7451
A
w2250
37262 >= 25*xabs
25*xabs = 37262
B
w2251
37267 >= 25*xabs
25*xabs = 37267
A
w2252
37274 >= 25*xabs
25*xabs = 37274
B
w2253
37279 >= 25*xabs
25*xabs = 37279
A
w2254
37286 >= 25*xabs
25*xabs = 37286
B
w2255
37292 >= 25*xabs
25*xabs = 37292
A
w2256
37298 >= 25*xabs
25*xabs = 37298
B
w2257
37304 >= 25*xabs
25*xabs = 37304
A
w2258
7462 >= 5*xabs
5*xabs = 7462
B
w2259
37316 >= 25*xabs
25*xabs = 37316
A
w2260
37323 >= 25*xabs
25*xabs = 37323
B
w2261
37328 >= 25*xabs
25*xabs = 37328
A
w2262
37331 >= 25*xabs
25*xabs = 37331
B

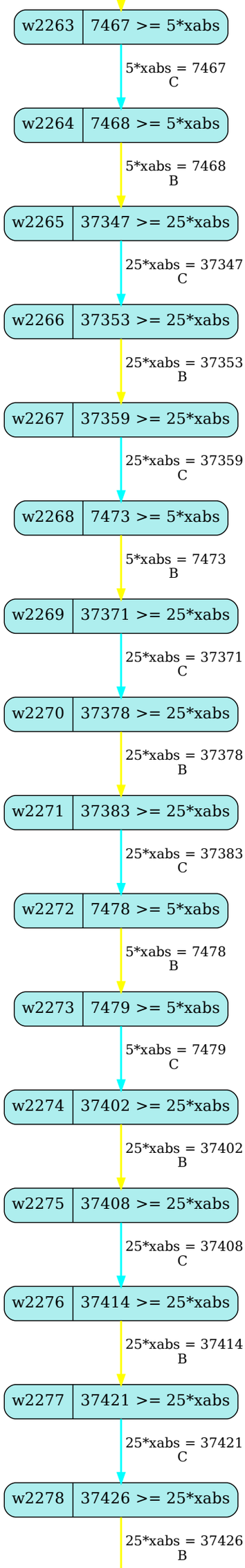
w2263
7467 >= 5*xabs
5*xabs = 7467
C
w2264
7468 >= 5*xabs
5*xabs = 7468
B
w2265
37347 >= 25*xabs
25*xabs = 37347
C
w2266
37353 >= 25*xabs
25*xabs = 37353
B
w2267
37359 >= 25*xabs
25*xabs = 37359
C
w2268
7473 >= 5*xabs
5*xabs = 7473
B
w2269
37371 >= 25*xabs
25*xabs = 37371
C
w2270
37378 >= 25*xabs
25*xabs = 37378
B
w2271
37383 >= 25*xabs
25*xabs = 37383
C
w2272
7478 >= 5*xabs
5*xabs = 7478
B
w2273
7479 >= 5*xabs
5*xabs = 7479
C
w2274
37402 >= 25*xabs
25*xabs = 37402
B
w2275
37408 >= 25*xabs
25*xabs = 37408
C
w2276
37414 >= 25*xabs
25*xabs = 37414
B
w2277
37421 >= 25*xabs
25*xabs = 37421
C
w2278
37426 >= 25*xabs
25*xabs = 37426
B

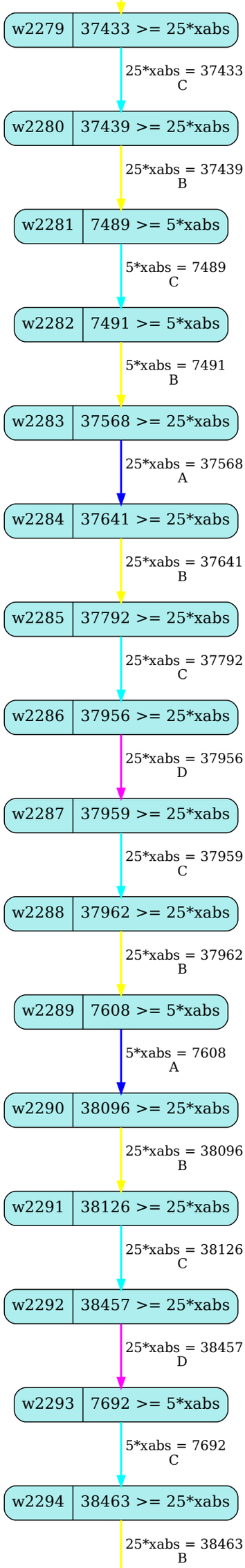
w2279
37433 >= 25*xabs
25*xabs = 37433
C
w2280
37439 >= 25*xabs
25*xabs = 37439
B
w2281
7489 >= 5*xabs
5*xabs = 7489
C
w2282
7491 >= 5*xabs
5*xabs = 7491
B
w2283
37568 >= 25*xabs
25*xabs = 37568
A
w2284
37641 >= 25*xabs
25*xabs = 37641
B
w2285
37792 >= 25*xabs
25*xabs = 37792
C
w2286
37956 >= 25*xabs
25*xabs = 37956
D
w2287
37959 >= 25*xabs
25*xabs = 37959
C
w2288
37962 >= 25*xabs
25*xabs = 37962
B
w2289
7608 >= 5*xabs
5*xabs = 7608
A
w2290
38096 >= 25*xabs
25*xabs = 38096
B
w2291
38126 >= 25*xabs
25*xabs = 38126
C
w2292
38457 >= 25*xabs
25*xabs = 38457
D
w2293
7692 >= 5*xabs
5*xabs = 7692
C
w2294
38463 >= 25*xabs
25*xabs = 38463
B

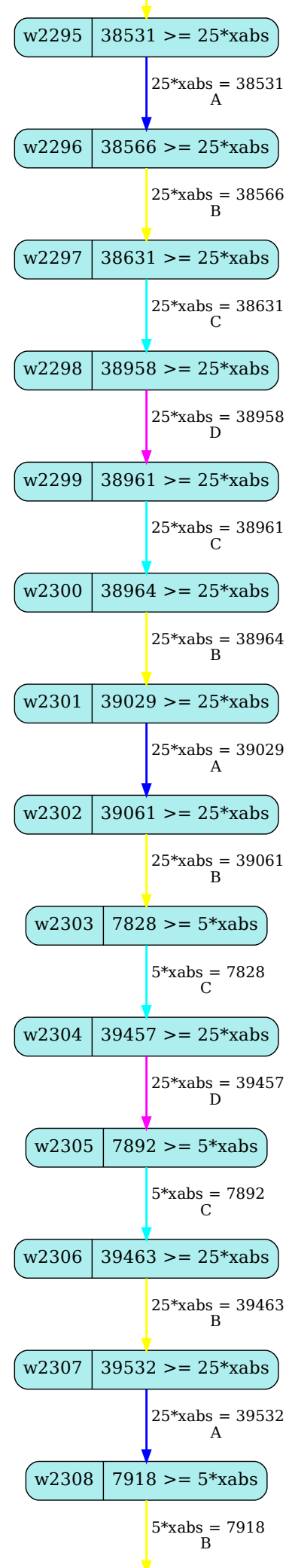
w2295
38531 >= 25*xabs
25*xabs = 38531
A
w2296
38566 >= 25*xabs
25*xabs = 38566
B
w2297
38631 >= 25*xabs
25*xabs = 38631
C
w2298
38958 >= 25*xabs
25*xabs = 38958
D
w2299
38961 >= 25*xabs
25*xabs = 38961
C
w2300
38964 >= 25*xabs
25*xabs = 38964
B
w2301
39029 >= 25*xabs
25*xabs = 39029
A
w2302
39061 >= 25*xabs
25*xabs = 39061
B
w2303
7828 >= 5*xabs
5*xabs = 7828
C
w2304
39457 >= 25*xabs
25*xabs = 39457
D
w2305
7892 >= 5*xabs
5*xabs = 7892
C
w2306
39463 >= 25*xabs
25*xabs = 39463
B
w2307
39532 >= 25*xabs
25*xabs = 39532
A
w2308
7918 >= 5*xabs
5*xabs = 7918
B

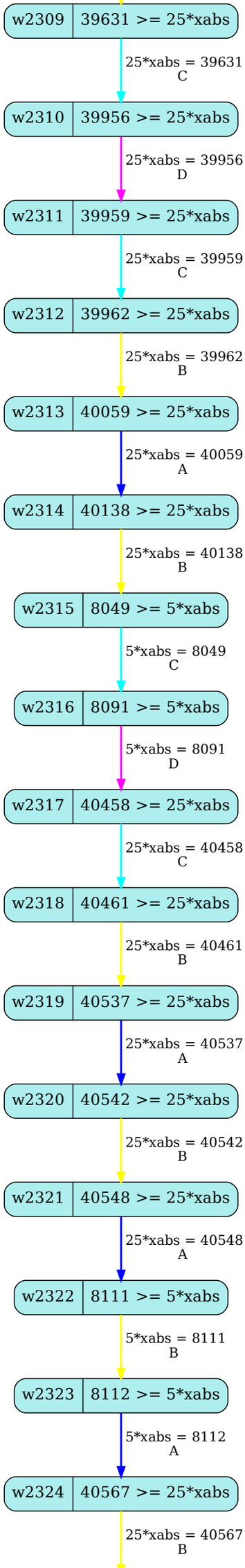
w2309
39631 >= 25*xabs
25*xabs = 39631
C
w2310
39956 >= 25*xabs
25*xabs = 39956
D
w2311
39959 >= 25*xabs
25*xabs = 39959
C
w2312
39962 >= 25*xabs
25*xabs = 39962
B
w2313
40059 >= 25*xabs
25*xabs = 40059
A
w2314
40138 >= 25*xabs
25*xabs = 40138
B
w2315
8049 >= 5*xabs
5*xabs = 8049
C
w2316
8091 >= 5*xabs
5*xabs = 8091
D
w2317
40458 >= 25*xabs
25*xabs = 40458
C
w2318
40461 >= 25*xabs
25*xabs = 40461
B
w2319
40537 >= 25*xabs
25*xabs = 40537
A
w2320
40542 >= 25*xabs
25*xabs = 40542
B
w2321
40548 >= 25*xabs
25*xabs = 40548
A
w2322
8111 >= 5*xabs
5*xabs = 8111
B
w2323
8112 >= 5*xabs
5*xabs = 8112
A
w2324
40567 >= 25*xabs
25*xabs = 40567
B

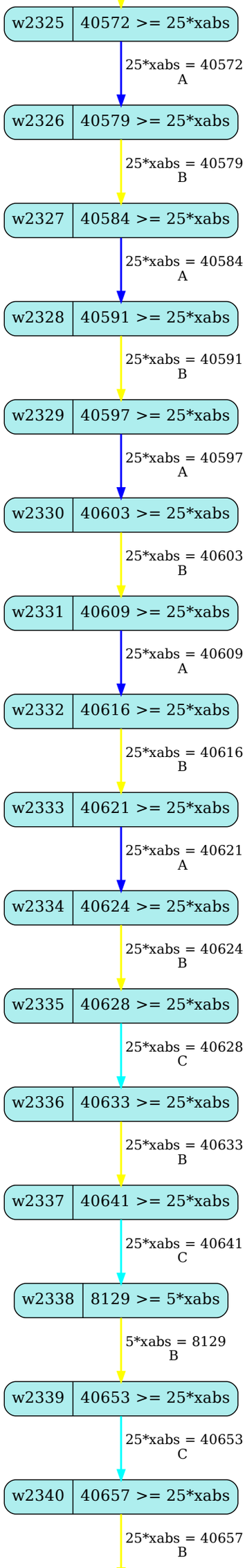
w2325
40572 >= 25*xabs
25*xabs = 40572
A
w2326
40579 >= 25*xabs
25*xabs = 40579
B
w2327
40584 >= 25*xabs
25*xabs = 40584
A
w2328
40591 >= 25*xabs
25*xabs = 40591
B
w2329
40597 >= 25*xabs
25*xabs = 40597
A
w2330
40603 >= 25*xabs
25*xabs = 40603
B
w2331
40609 >= 25*xabs
25*xabs = 40609
A
w2332
40616 >= 25*xabs
25*xabs = 40616
B
w2333
40621 >= 25*xabs
25*xabs = 40621
A
w2334
40624 >= 25*xabs
25*xabs = 40624
B
w2335
40628 >= 25*xabs
25*xabs = 40628
C
w2336
40633 >= 25*xabs
25*xabs = 40633
B
w2337
40641 >= 25*xabs
25*xabs = 40641
C
w2338
8129 >= 5*xabs
5*xabs = 8129
B
w2339
40653 >= 25*xabs
25*xabs = 40653
C
w2340
40657 >= 25*xabs
25*xabs = 40657
B

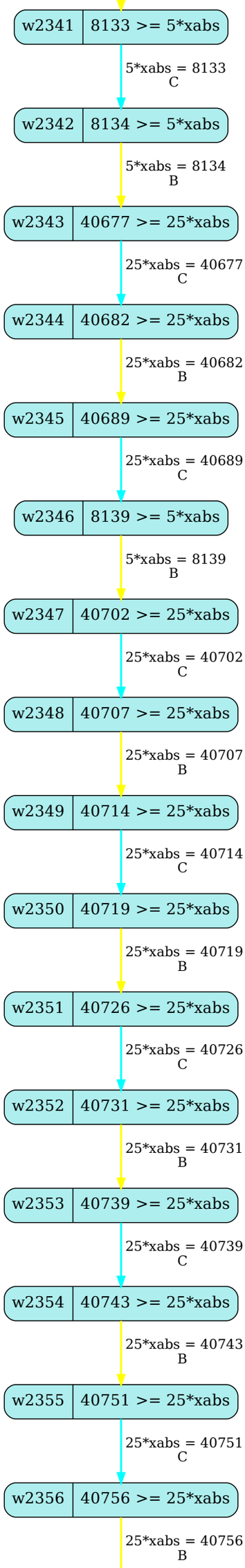
w2341
8133 >= 5*xabs
5*xabs = 8133
C
w2342
8134 >= 5*xabs
5*xabs = 8134
B
w2343
40677 >= 25*xabs
25*xabs = 40677
C
w2344
40682 >= 25*xabs
25*xabs = 40682
B
w2345
40689 >= 25*xabs
25*xabs = 40689
C
w2346
8139 >= 5*xabs
5*xabs = 8139
B
w2347
40702 >= 25*xabs
25*xabs = 40702
C
w2348
40707 >= 25*xabs
25*xabs = 40707
B
w2349
40714 >= 25*xabs
25*xabs = 40714
C
w2350
40719 >= 25*xabs
25*xabs = 40719
B
w2351
40726 >= 25*xabs
25*xabs = 40726
C
w2352
40731 >= 25*xabs
25*xabs = 40731
B
w2353
40739 >= 25*xabs
25*xabs = 40739
C
w2354
40743 >= 25*xabs
25*xabs = 40743
B
w2355
40751 >= 25*xabs
25*xabs = 40751
C
w2356
40756 >= 25*xabs
25*xabs = 40756
B

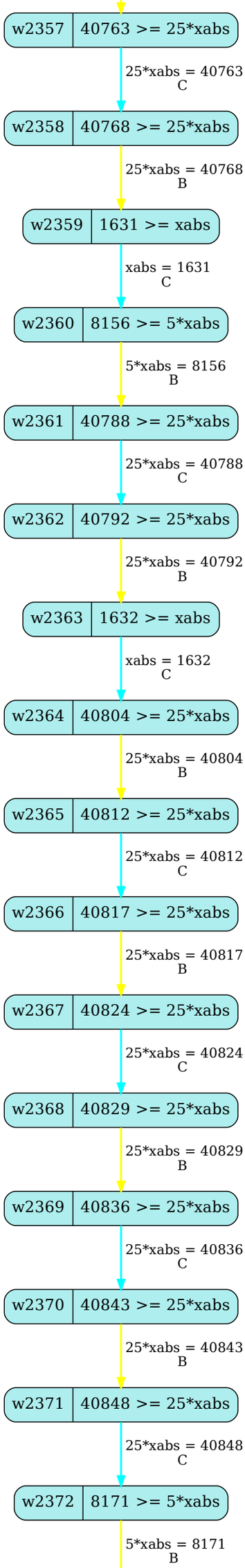
w2357
40763 >= 25*xabs
25*xabs = 40763
C
w2358
40768 >= 25*xabs
25*xabs = 40768
B
w2359
1631 >= xabs
xabs = 1631
C
w2360
8156 >= 5*xabs
5*xabs = 8156
B
w2361
40788 >= 25*xabs
25*xabs = 40788
C
w2362
40792 >= 25*xabs
25*xabs = 40792
B
w2363
1632 >= xabs
xabs = 1632
C
w2364
40804 >= 25*xabs
25*xabs = 40804
B
w2365
40812 >= 25*xabs
25*xabs = 40812
C
w2366
40817 >= 25*xabs
25*xabs = 40817
B
w2367
40824 >= 25*xabs
25*xabs = 40824
C
w2368
40829 >= 25*xabs
25*xabs = 40829
B
w2369
40836 >= 25*xabs
25*xabs = 40836
C
w2370
40843 >= 25*xabs
25*xabs = 40843
B
w2371
40848 >= 25*xabs
25*xabs = 40848
C
w2372
8171 >= 5*xabs
5*xabs = 8171
B

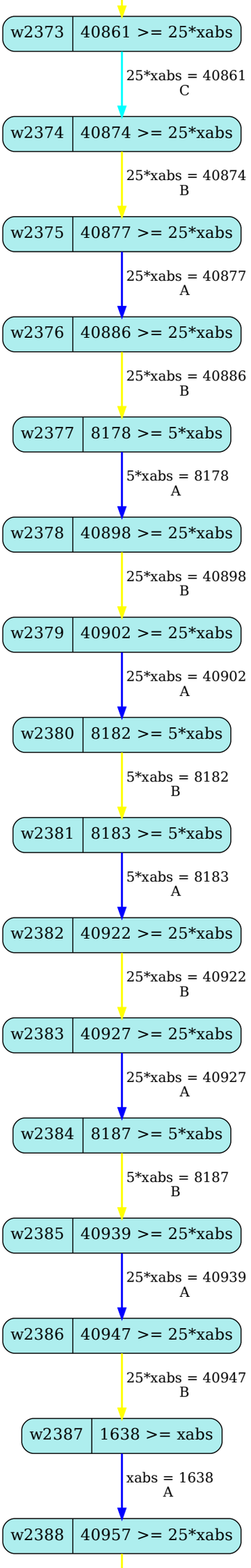
w2373
40861 >= 25*xabs
25*xabs = 40861
C
w2374
40874 >= 25*xabs
25*xabs = 40874
B
w2375
40877 >= 25*xabs
25*xabs = 40877
A
w2376
40886 >= 25*xabs
25*xabs = 40886
B
w2377
8178 >= 5*xabs
5*xabs = 8178
A
w2378
40898 >= 25*xabs
25*xabs = 40898
B
w2379
40902 >= 25*xabs
25*xabs = 40902
A
w2380
8182 >= 5*xabs
5*xabs = 8182
B
w2381
8183 >= 5*xabs
5*xabs = 8183
A
w2382
40922 >= 25*xabs
25*xabs = 40922
B
w2383
40927 >= 25*xabs
25*xabs = 40927
A
w2384
8187 >= 5*xabs
5*xabs = 8187
B
w2385
40939 >= 25*xabs
25*xabs = 40939
A
w2386
40947 >= 25*xabs
25*xabs = 40947
B
w2387
1638 >= xabs
xabs = 1638
A
w2388
40957 >= 25*xabs

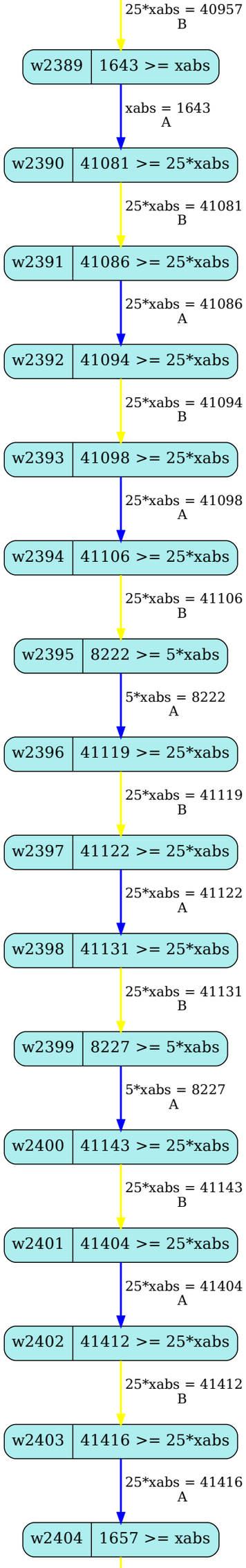
25*xabs = 40957
B
w2389
1643 >= xabs
xabs = 1643
A
w2390
41081 >= 25*xabs
25*xabs = 41081
B
w2391
41086 >= 25*xabs
25*xabs = 41086
A
w2392
41094 >= 25*xabs
25*xabs = 41094
B
w2393
41098 >= 25*xabs
25*xabs = 41098
A
w2394
41106 >= 25*xabs
25*xabs = 41106
B
w2395
8222 >= 5*xabs
5*xabs = 8222
A
w2396
41119 >= 25*xabs
25*xabs = 41119
B
w2397
41122 >= 25*xabs
25*xabs = 41122
A
w2398
41131 >= 25*xabs
25*xabs = 41131
B
w2399
8227 >= 5*xabs
5*xabs = 8227
A
w2400
41143 >= 25*xabs
25*xabs = 41143
B
w2401
41404 >= 25*xabs
25*xabs = 41404
A
w2402
41412 >= 25*xabs
25*xabs = 41412
B
w2403
41416 >= 25*xabs
25*xabs = 41416
A
w2404
1657 >= xabs

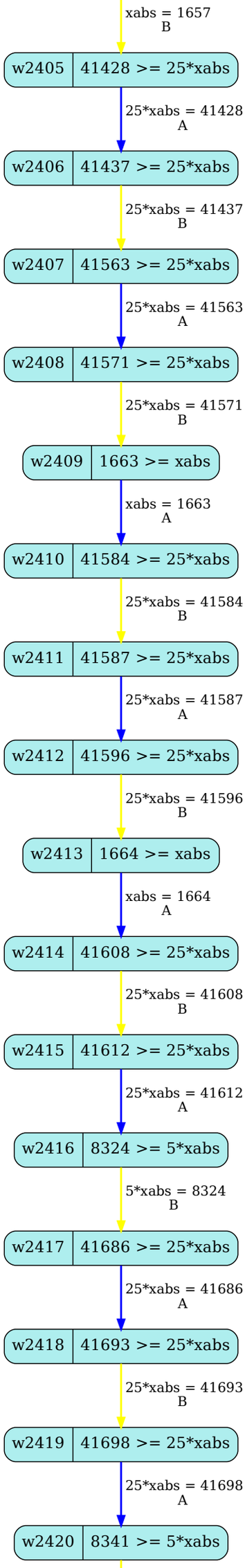
xabs = 1657
B
w2405
41428 >= 25*xabs
25*xabs = 41428
A
w2406
41437 >= 25*xabs
25*xabs = 41437
B
w2407
41563 >= 25*xabs
25*xabs = 41563
A
w2408
41571 >= 25*xabs
25*xabs = 41571
B
w2409
1663 >= xabs
xabs = 1663
A
w2410
41584 >= 25*xabs
25*xabs = 41584
B
w2411
41587 >= 25*xabs
25*xabs = 41587
A
w2412
41596 >= 25*xabs
25*xabs = 41596
B
w2413
1664 >= xabs
xabs = 1664
A
w2414
41608 >= 25*xabs
25*xabs = 41608
B
w2415
41612 >= 25*xabs
25*xabs = 41612
A
w2416
8324 >= 5*xabs
5*xabs = 8324
B
w2417
41686 >= 25*xabs
25*xabs = 41686
A
w2418
41693 >= 25*xabs
25*xabs = 41693
B
w2419
41698 >= 25*xabs
25*xabs = 41698
A
w2420
8341 >= 5*xabs

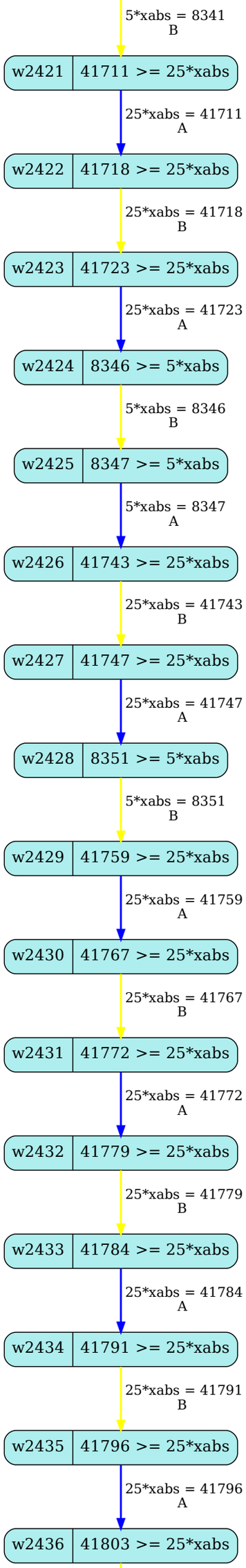
5*xabs = 8341
B
w2421
41711 >= 25*xabs
25*xabs = 41711
A
w2422
41718 >= 25*xabs
25*xabs = 41718
B
w2423
41723 >= 25*xabs
25*xabs = 41723
A
w2424
8346 >= 5*xabs
5*xabs = 8346
B
w2425
8347 >= 5*xabs
5*xabs = 8347
A
w2426
41743 >= 25*xabs
25*xabs = 41743
B
w2427
41747 >= 25*xabs
25*xabs = 41747
A
w2428
8351 >= 5*xabs
5*xabs = 8351
B
w2429
41759 >= 25*xabs
25*xabs = 41759
A
w2430
41767 >= 25*xabs
25*xabs = 41767
B
w2431
41772 >= 25*xabs
25*xabs = 41772
A
w2432
41779 >= 25*xabs
25*xabs = 41779
B
w2433
41784 >= 25*xabs
25*xabs = 41784
A
w2434
41791 >= 25*xabs
25*xabs = 41791
B
w2435
41796 >= 25*xabs
25*xabs = 41796
A
w2436
41803 >= 25*xabs

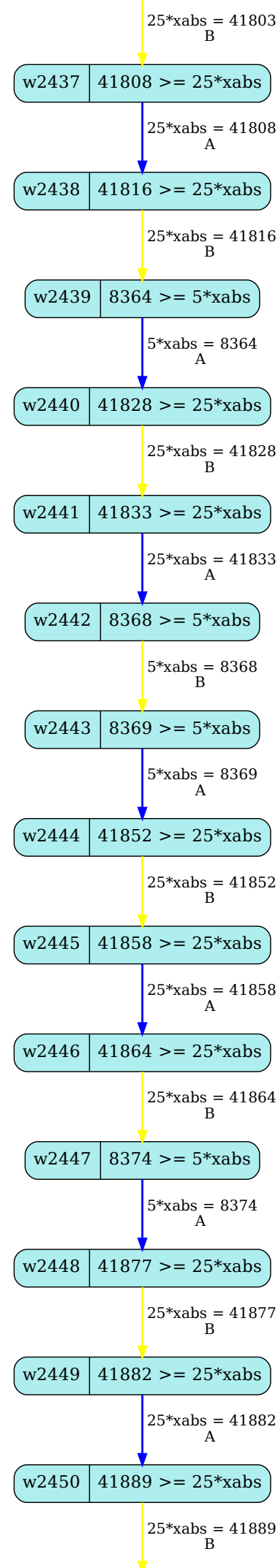
25*xabs = 41803
B
w2437
41808 >= 25*xabs
25*xabs = 41808
A
w2438
41816 >= 25*xabs
25*xabs = 41816
B
w2439
8364 >= 5*xabs
5*xabs = 8364
A
w2440
41828 >= 25*xabs
25*xabs = 41828
B
w2441
41833 >= 25*xabs
25*xabs = 41833
A
w2442
8368 >= 5*xabs
5*xabs = 8368
B
w2443
8369 >= 5*xabs
5*xabs = 8369
A
w2444
41852 >= 25*xabs
25*xabs = 41852
B
w2445
41858 >= 25*xabs
25*xabs = 41858
A
w2446
41864 >= 25*xabs
25*xabs = 41864
B
w2447
8374 >= 5*xabs
5*xabs = 8374
A
w2448
41877 >= 25*xabs
25*xabs = 41877
B
w2449
41882 >= 25*xabs
25*xabs = 41882
A
w2450
41889 >= 25*xabs
25*xabs = 41889
B

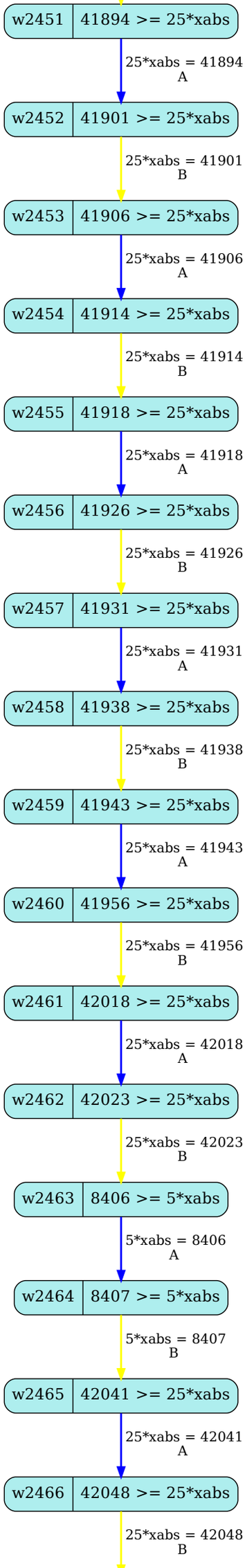
w2451
41894 >= 25*xabs
25*xabs = 41894
A
w2452
41901 >= 25*xabs
25*xabs = 41901
B
w2453
41906 >= 25*xabs
25*xabs = 41906
A
w2454
41914 >= 25*xabs
25*xabs = 41914
B
w2455
41918 >= 25*xabs
25*xabs = 41918
A
w2456
41926 >= 25*xabs
25*xabs = 41926
B
w2457
41931 >= 25*xabs
25*xabs = 41931
A
w2458
41938 >= 25*xabs
25*xabs = 41938
B
w2459
41943 >= 25*xabs
25*xabs = 41943
A
w2460
41956 >= 25*xabs
25*xabs = 41956
B
w2461
42018 >= 25*xabs
25*xabs = 42018
A
w2462
42023 >= 25*xabs
25*xabs = 42023
B
w2463
8406 >= 5*xabs
5*xabs = 8406
A
w2464
8407 >= 5*xabs
5*xabs = 8407
B
w2465
42041 >= 25*xabs
25*xabs = 42041
A
w2466
42048 >= 25*xabs
25*xabs = 42048
B

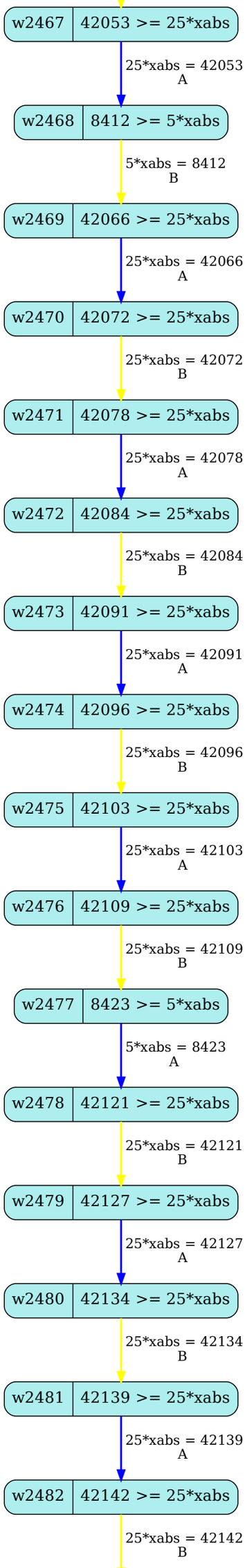
w2467
42053 >= 25*xabs
25*xabs = 42053
A
w2468
8412 >= 5*xabs
5*xabs = 8412
B
w2469
42066 >= 25*xabs
25*xabs = 42066
A
w2470
42072 >= 25*xabs
25*xabs = 42072
B
w2471
42078 >= 25*xabs
25*xabs = 42078
A
w2472
42084 >= 25*xabs
25*xabs = 42084
B
w2473
42091 >= 25*xabs
25*xabs = 42091
A
w2474
42096 >= 25*xabs
25*xabs = 42096
B
w2475
42103 >= 25*xabs
25*xabs = 42103
A
w2476
42109 >= 25*xabs
25*xabs = 42109
B
w2477
8423 >= 5*xabs
5*xabs = 8423
A
w2478
42121 >= 25*xabs
25*xabs = 42121
B
w2479
42127 >= 25*xabs
25*xabs = 42127
A
w2480
42134 >= 25*xabs
25*xabs = 42134
B
w2481
42139 >= 25*xabs
25*xabs = 42139
A
w2482
42142 >= 25*xabs
25*xabs = 42142
B

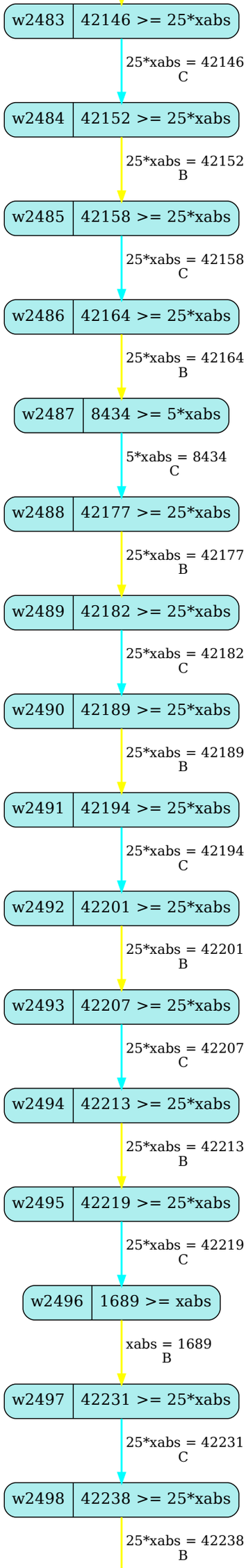
w2483
42146 >= 25*xabs
25*xabs = 42146
C
w2484
42152 >= 25*xabs
25*xabs = 42152
B
w2485
42158 >= 25*xabs
25*xabs = 42158
C
w2486
42164 >= 25*xabs
25*xabs = 42164
B
w2487
8434 >= 5*xabs
5*xabs = 8434
C
w2488
42177 >= 25*xabs
25*xabs = 42177
B
w2489
42182 >= 25*xabs
25*xabs = 42182
C
w2490
42189 >= 25*xabs
25*xabs = 42189
B
w2491
42194 >= 25*xabs
25*xabs = 42194
C
w2492
42201 >= 25*xabs
25*xabs = 42201
B
w2493
42207 >= 25*xabs
25*xabs = 42207
C
w2494
42213 >= 25*xabs
25*xabs = 42213
B
w2495
42219 >= 25*xabs
25*xabs = 42219
C
w2496
1689 >= xabs
xabs = 1689
B
w2497
42231 >= 25*xabs
25*xabs = 42231
C
w2498
42238 >= 25*xabs
25*xabs = 42238
B

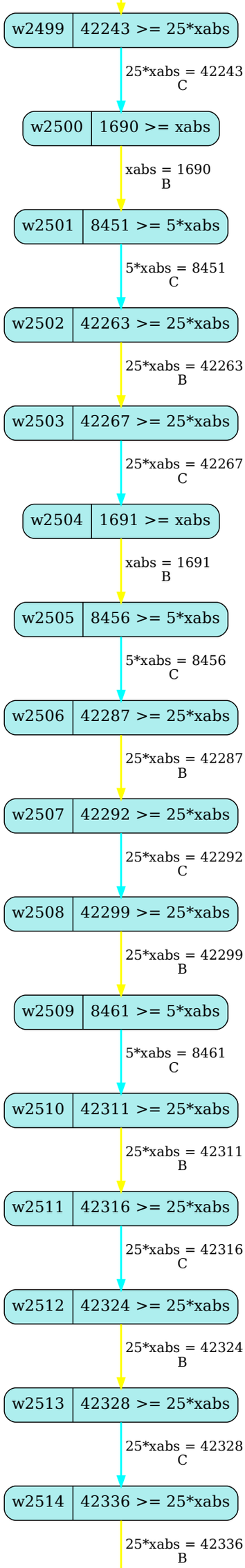
w2499
42243 >= 25*xabs
25*xabs = 42243
C
w2500
1690 >= xabs
xabs = 1690
B
w2501
8451 >= 5*xabs
5*xabs = 8451
C
w2502
42263 >= 25*xabs
25*xabs = 42263
B
w2503
42267 >= 25*xabs
25*xabs = 42267
C
w2504
1691 >= xabs
xabs = 1691
B
w2505
8456 >= 5*xabs
5*xabs = 8456
C
w2506
42287 >= 25*xabs
25*xabs = 42287
B
w2507
42292 >= 25*xabs
25*xabs = 42292
C
w2508
42299 >= 25*xabs
25*xabs = 42299
B
w2509
8461 >= 5*xabs
5*xabs = 8461
C
w2510
42311 >= 25*xabs
25*xabs = 42311
B
w2511
42316 >= 25*xabs
25*xabs = 42316
C
w2512
42324 >= 25*xabs
25*xabs = 42324
B
w2513
42328 >= 25*xabs
25*xabs = 42328
C
w2514
42336 >= 25*xabs
25*xabs = 42336
B

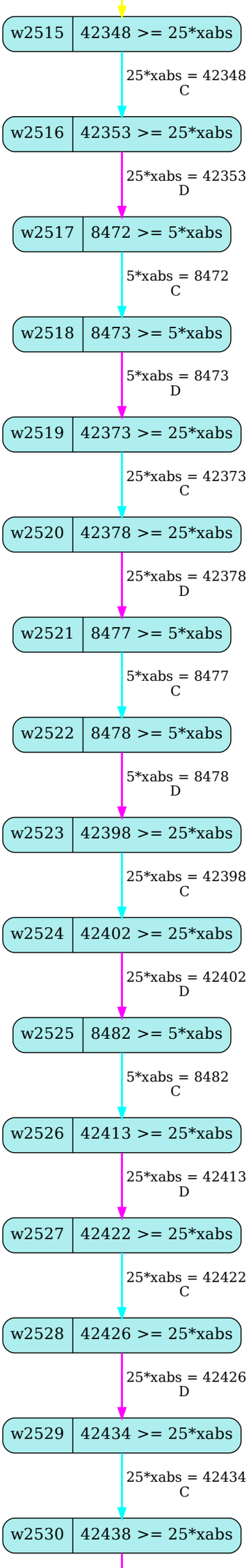
w2515
42348 >= 25*xabs
25*xabs = 42348
C
w2516
42353 >= 25*xabs
25*xabs = 42353
D
w2517
8472 >= 5*xabs
5*xabs = 8472
C
w2518
8473 >= 5*xabs
5*xabs = 8473
D
w2519
42373 >= 25*xabs
25*xabs = 42373
C
w2520
42378 >= 25*xabs
25*xabs = 42378
D
w2521
8477 >= 5*xabs
5*xabs = 8477
C
w2522
8478 >= 5*xabs
5*xabs = 8478
D
w2523
42398 >= 25*xabs
25*xabs = 42398
C
w2524
42402 >= 25*xabs
25*xabs = 42402
D
w2525
8482 >= 5*xabs
5*xabs = 8482
C
w2526
42413 >= 25*xabs
25*xabs = 42413
D
w2527
42422 >= 25*xabs
25*xabs = 42422
C
w2528
42426 >= 25*xabs
25*xabs = 42426
D
w2529
42434 >= 25*xabs
25*xabs = 42434
C
w2530
42438 >= 25*xabs

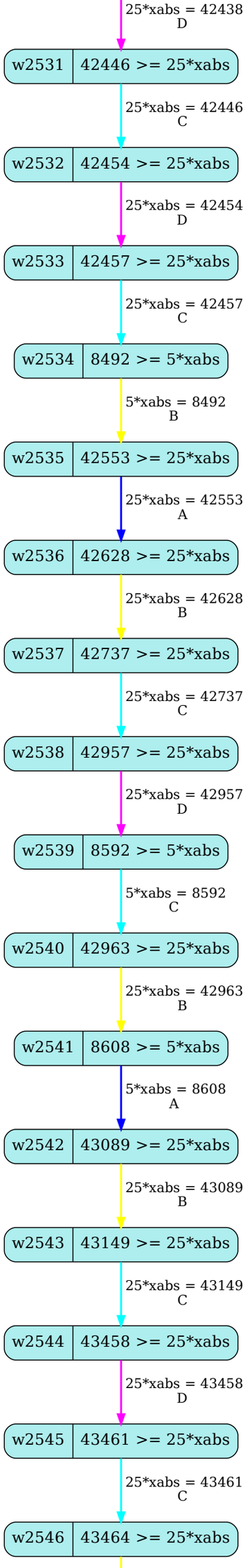
25*xabs = 42438
D
w2531
42446 >= 25*xabs
25*xabs = 42446
C
w2532
42454 >= 25*xabs
25*xabs = 42454
D
w2533
42457 >= 25*xabs
25*xabs = 42457
C
w2534
8492 >= 5*xabs
5*xabs = 8492
B
w2535
42553 >= 25*xabs
25*xabs = 42553
A
w2536
42628 >= 25*xabs
25*xabs = 42628
B
w2537
42737 >= 25*xabs
25*xabs = 42737
C
w2538
42957 >= 25*xabs
25*xabs = 42957
D
w2539
8592 >= 5*xabs
5*xabs = 8592
C
w2540
42963 >= 25*xabs
25*xabs = 42963
B
w2541
8608 >= 5*xabs
5*xabs = 8608
A
w2542
43089 >= 25*xabs
25*xabs = 43089
B
w2543
43149 >= 25*xabs
25*xabs = 43149
C
w2544
43458 >= 25*xabs
25*xabs = 43458
D
w2545
43461 >= 25*xabs
25*xabs = 43461
C
w2546
43464 >= 25*xabs

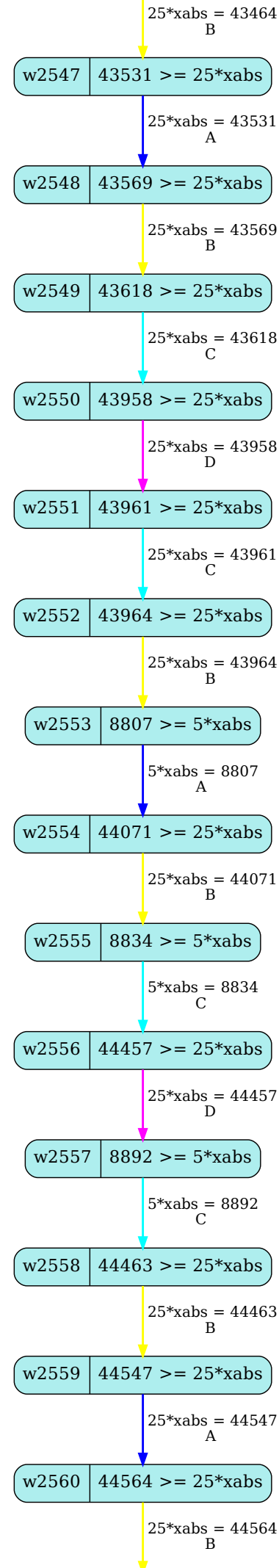
25*xabs = 43464
B
w2547
43531 >= 25*xabs
25*xabs = 43531
A
w2548
43569 >= 25*xabs
25*xabs = 43569
B
w2549
43618 >= 25*xabs
25*xabs = 43618
C
w2550
43958 >= 25*xabs
25*xabs = 43958
D
w2551
43961 >= 25*xabs
25*xabs = 43961
C
w2552
43964 >= 25*xabs
25*xabs = 43964
B
w2553
8807 >= 5*xabs
5*xabs = 8807
A
w2554
44071 >= 25*xabs
25*xabs = 44071
B
w2555
8834 >= 5*xabs
5*xabs = 8834
C
w2556
44457 >= 25*xabs
25*xabs = 44457
D
w2557
8892 >= 5*xabs
5*xabs = 8892
C
w2558
44463 >= 25*xabs
25*xabs = 44463
B
w2559
44547 >= 25*xabs
25*xabs = 44547
A
w2560
44564 >= 25*xabs
25*xabs = 44564
B

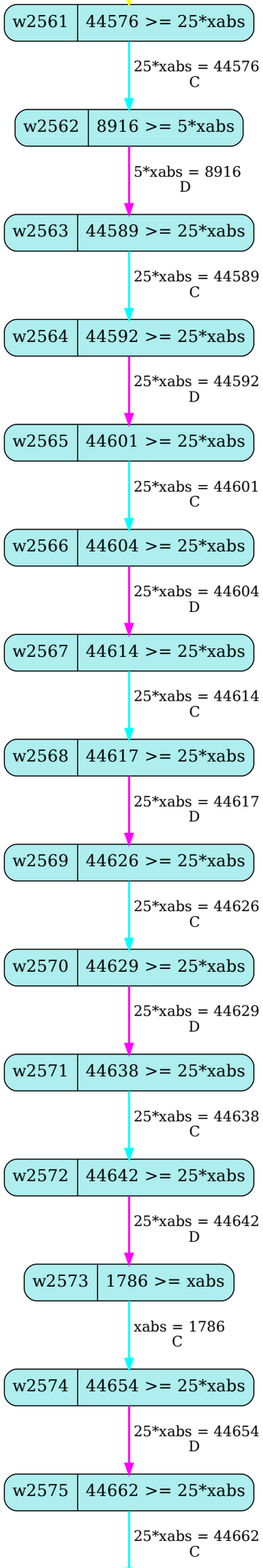
w2561
44576 >= 25*xabs
25*xabs = 44576
C
w2562
8916 >= 5*xabs
5*xabs = 8916
D
w2563
44589 >= 25*xabs
25*xabs = 44589
C
w2564
44592 >= 25*xabs
25*xabs = 44592
D
w2565
44601 >= 25*xabs
25*xabs = 44601
C
w2566
44604 >= 25*xabs
25*xabs = 44604
D
w2567
44614 >= 25*xabs
25*xabs = 44614
C
w2568
44617 >= 25*xabs
25*xabs = 44617
D
w2569
44626 >= 25*xabs
25*xabs = 44626
C
w2570
44629 >= 25*xabs
25*xabs = 44629
D
w2571
44638 >= 25*xabs
25*xabs = 44638
C
w2572
44642 >= 25*xabs
25*xabs = 44642
D
w2573
1786 >= xabs
xabs = 1786
C
w2574
44654 >= 25*xabs
25*xabs = 44654
D
w2575
44662 >= 25*xabs
25*xabs = 44662
C

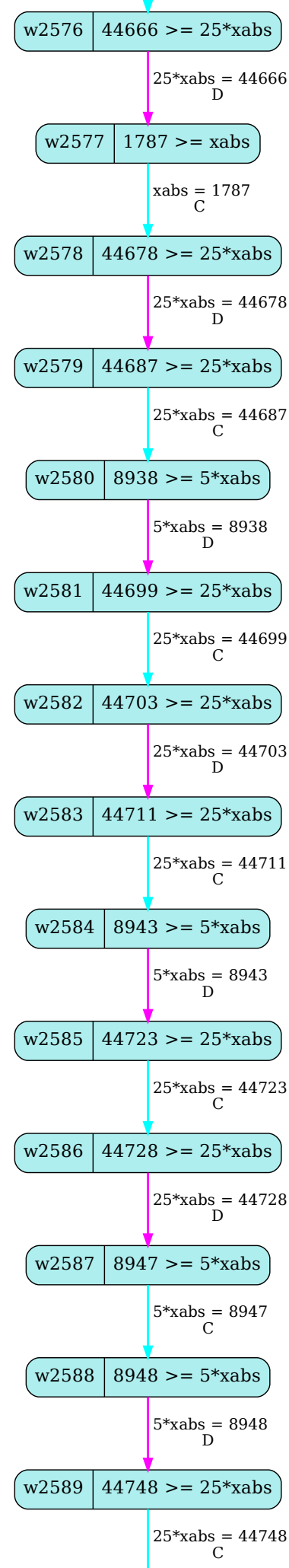
w2576
44666 >= 25*xabs
25*xabs = 44666
D
w2577
1787 >= xabs
xabs = 1787
C
w2578
44678 >= 25*xabs
25*xabs = 44678
D
w2579
44687 >= 25*xabs
25*xabs = 44687
C
w2580
8938 >= 5*xabs
5*xabs = 8938
D
w2581
44699 >= 25*xabs
25*xabs = 44699
C
w2582
44703 >= 25*xabs
25*xabs = 44703
D
w2583
44711 >= 25*xabs
25*xabs = 44711
C
w2584
8943 >= 5*xabs
5*xabs = 8943
D
w2585
44723 >= 25*xabs
25*xabs = 44723
C
w2586
44728 >= 25*xabs
25*xabs = 44728
D
w2587
8947 >= 5*xabs
5*xabs = 8947
C
w2588
8948 >= 5*xabs
5*xabs = 8948
D
w2589
44748 >= 25*xabs
25*xabs = 44748
C

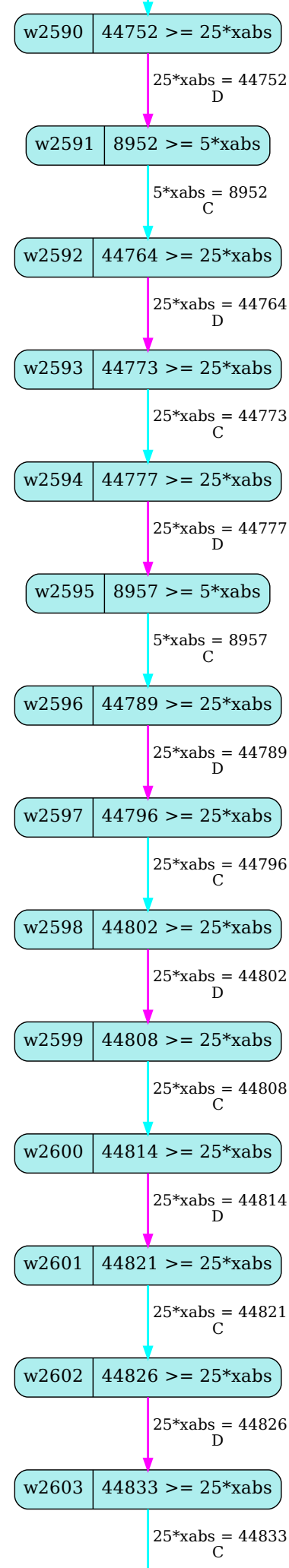
w2590
44752 >= 25*xabs
25*xabs = 44752
D
w2591
8952 >= 5*xabs
5*xabs = 8952
C
w2592
44764 >= 25*xabs
25*xabs = 44764
D
w2593
44773 >= 25*xabs
25*xabs = 44773
C
w2594
44777 >= 25*xabs
25*xabs = 44777
D
w2595
8957 >= 5*xabs
5*xabs = 8957
C
w2596
44789 >= 25*xabs
25*xabs = 44789
D
w2597
44796 >= 25*xabs
25*xabs = 44796
C
w2598
44802 >= 25*xabs
25*xabs = 44802
D
w2599
44808 >= 25*xabs
25*xabs = 44808
C
w2600
44814 >= 25*xabs
25*xabs = 44814
D
w2601
44821 >= 25*xabs
25*xabs = 44821
C
w2602
44826 >= 25*xabs
25*xabs = 44826
D
w2603
44833 >= 25*xabs
25*xabs = 44833
C

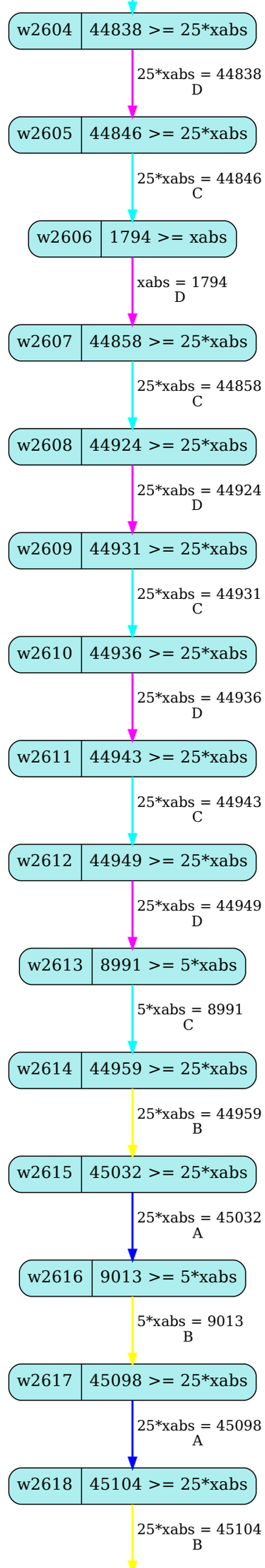
w2604
44838 >= 25*xabs
25*xabs = 44838
D
w2605
44846 >= 25*xabs
25*xabs = 44846
C
w2606
1794 >= xabs
xabs = 1794
D
w2607
44858 >= 25*xabs
25*xabs = 44858
C
w2608
44924 >= 25*xabs
25*xabs = 44924
D
w2609
44931 >= 25*xabs
25*xabs = 44931
C
w2610
44936 >= 25*xabs
25*xabs = 44936
D
w2611
44943 >= 25*xabs
25*xabs = 44943
C
w2612
44949 >= 25*xabs
25*xabs = 44949
D
w2613
8991 >= 5*xabs
5*xabs = 8991
C
w2614
44959 >= 25*xabs
25*xabs = 44959
B
w2615
45032 >= 25*xabs
25*xabs = 45032
A
w2616
9013 >= 5*xabs
5*xabs = 9013
B
w2617
45098 >= 25*xabs
25*xabs = 45098
A
w2618
45104 >= 25*xabs
25*xabs = 45104
B

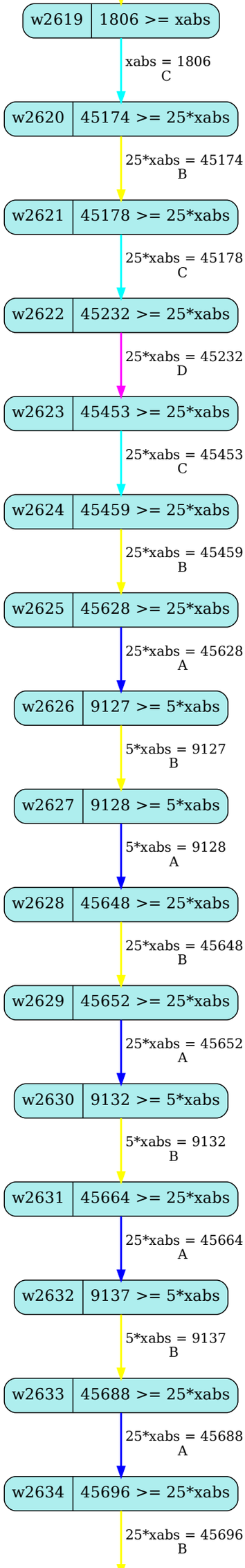
w2619
1806 >= xabs
xabs = 1806
C
w2620
45174 >= 25*xabs
25*xabs = 45174
B
w2621
45178 >= 25*xabs
25*xabs = 45178
C
w2622
45232 >= 25*xabs
25*xabs = 45232
D
w2623
45453 >= 25*xabs
25*xabs = 45453
C
w2624
45459 >= 25*xabs
25*xabs = 45459
B
w2625
45628 >= 25*xabs
25*xabs = 45628
A
w2626
9127 >= 5*xabs
5*xabs = 9127
B
w2627
9128 >= 5*xabs
5*xabs = 9128
A
w2628
45648 >= 25*xabs
25*xabs = 45648
B
w2629
45652 >= 25*xabs
25*xabs = 45652
A
w2630
9132 >= 5*xabs
5*xabs = 9132
B
w2631
45664 >= 25*xabs
25*xabs = 45664
A
w2632
9137 >= 5*xabs
5*xabs = 9137
B
w2633
45688 >= 25*xabs
25*xabs = 45688
A
w2634
45696 >= 25*xabs
25*xabs = 45696
B

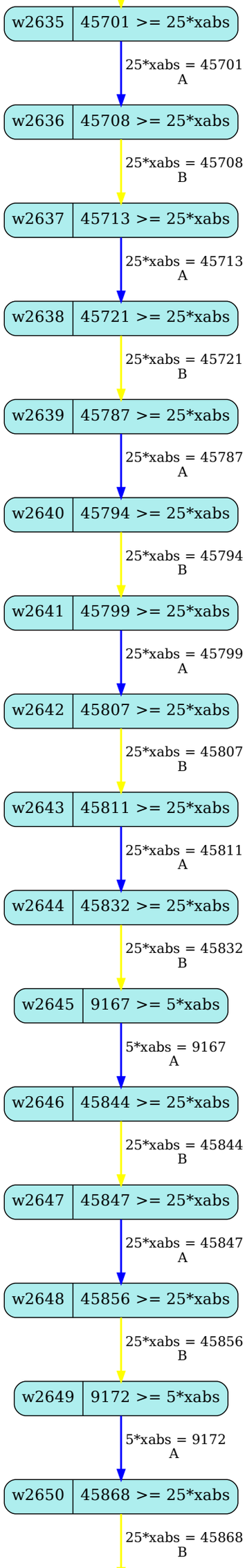
w2635
45701 >= 25*xabs
25*xabs = 45701
A
w2636
45708 >= 25*xabs
25*xabs = 45708
B
w2637
45713 >= 25*xabs
25*xabs = 45713
A
w2638
45721 >= 25*xabs
25*xabs = 45721
B
w2639
45787 >= 25*xabs
25*xabs = 45787
A
w2640
45794 >= 25*xabs
25*xabs = 45794
B
w2641
45799 >= 25*xabs
25*xabs = 45799
A
w2642
45807 >= 25*xabs
25*xabs = 45807
B
w2643
45811 >= 25*xabs
25*xabs = 45811
A
w2644
45832 >= 25*xabs
25*xabs = 45832
B
w2645
9167 >= 5*xabs
5*xabs = 9167
A
w2646
45844 >= 25*xabs
25*xabs = 45844
B
w2647
45847 >= 25*xabs
25*xabs = 45847
A
w2648
45856 >= 25*xabs
25*xabs = 45856
B
w2649
9172 >= 5*xabs
5*xabs = 9172
A
w2650
45868 >= 25*xabs
25*xabs = 45868
B

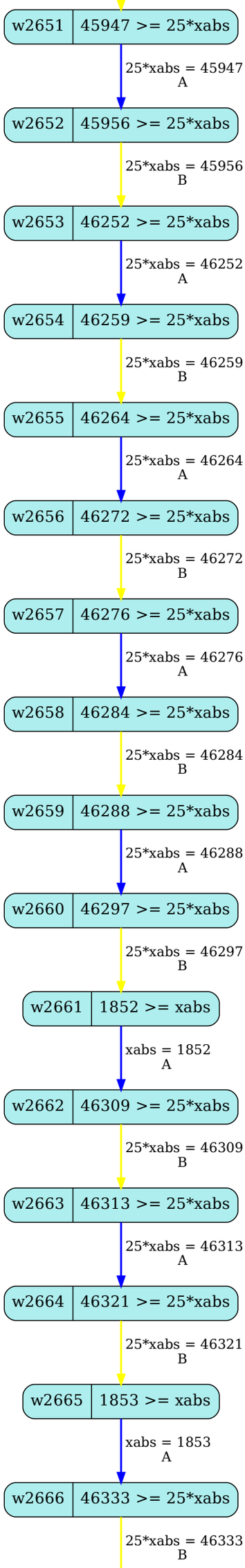
w2651
45947 >= 25*xabs
25*xabs = 45947
A
w2652
45956 >= 25*xabs
25*xabs = 45956
B
w2653
46252 >= 25*xabs
25*xabs = 46252
A
w2654
46259 >= 25*xabs
25*xabs = 46259
B
w2655
46264 >= 25*xabs
25*xabs = 46264
A
w2656
46272 >= 25*xabs
25*xabs = 46272
B
w2657
46276 >= 25*xabs
25*xabs = 46276
A
w2658
46284 >= 25*xabs
25*xabs = 46284
B
w2659
46288 >= 25*xabs
25*xabs = 46288
A
w2660
46297 >= 25*xabs
25*xabs = 46297
B
w2661
1852 >= xabs
xabs = 1852
A
w2662
46309 >= 25*xabs
25*xabs = 46309
B
w2663
46313 >= 25*xabs
25*xabs = 46313
A
w2664
46321 >= 25*xabs
25*xabs = 46321
B
w2665
1853 >= xabs
xabs = 1853
A
w2666
46333 >= 25*xabs
25*xabs = 46333
B

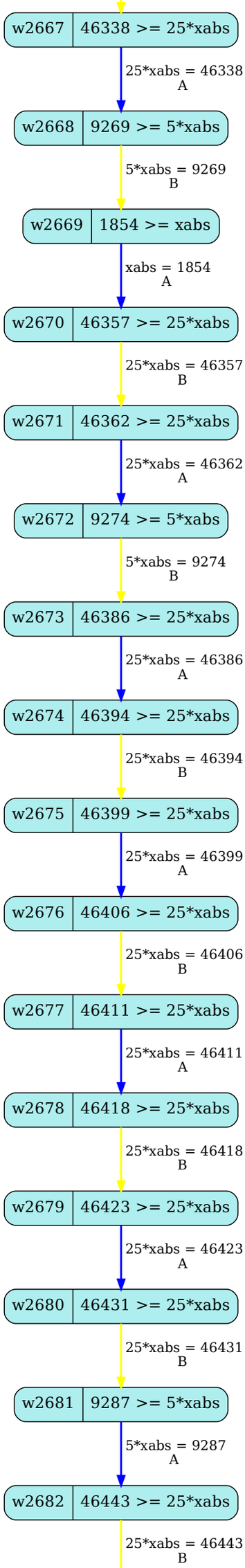
w2667
46338 >= 25*xabs
25*xabs = 46338
A
w2668
9269 >= 5*xabs
5*xabs = 9269
B
w2669
1854 >= xabs
xabs = 1854
A
w2670
46357 >= 25*xabs
25*xabs = 46357
B
w2671
46362 >= 25*xabs
25*xabs = 46362
A
w2672
9274 >= 5*xabs
5*xabs = 9274
B
w2673
46386 >= 25*xabs
25*xabs = 46386
A
w2674
46394 >= 25*xabs
25*xabs = 46394
B
w2675
46399 >= 25*xabs
25*xabs = 46399
A
w2676
46406 >= 25*xabs
25*xabs = 46406
B
w2677
46411 >= 25*xabs
25*xabs = 46411
A
w2678
46418 >= 25*xabs
25*xabs = 46418
B
w2679
46423 >= 25*xabs
25*xabs = 46423
A
w2680
46431 >= 25*xabs
25*xabs = 46431
B
w2681
9287 >= 5*xabs
5*xabs = 9287
A
w2682
46443 >= 25*xabs
25*xabs = 46443
B

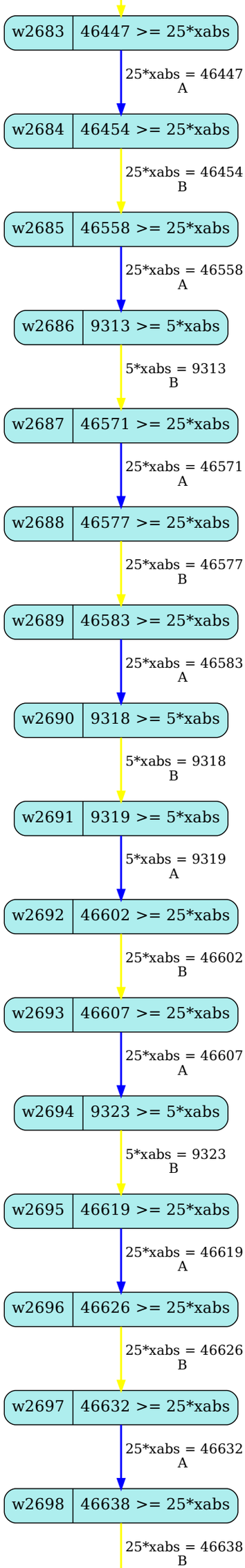
w2683
46447 >= 25*xabs
25*xabs = 46447
A
w2684
46454 >= 25*xabs
25*xabs = 46454
B
w2685
46558 >= 25*xabs
25*xabs = 46558
A
w2686
9313 >= 5*xabs
5*xabs = 9313
B
w2687
46571 >= 25*xabs
25*xabs = 46571
A
w2688
46577 >= 25*xabs
25*xabs = 46577
B
w2689
46583 >= 25*xabs
25*xabs = 46583
A
w2690
9318 >= 5*xabs
5*xabs = 9318
B
w2691
9319 >= 5*xabs
5*xabs = 9319
A
w2692
46602 >= 25*xabs
25*xabs = 46602
B
w2693
46607 >= 25*xabs
25*xabs = 46607
A
w2694
9323 >= 5*xabs
5*xabs = 9323
B
w2695
46619 >= 25*xabs
25*xabs = 46619
A
w2696
46626 >= 25*xabs
25*xabs = 46626
B
w2697
46632 >= 25*xabs
25*xabs = 46632
A
w2698
46638 >= 25*xabs
25*xabs = 46638
B

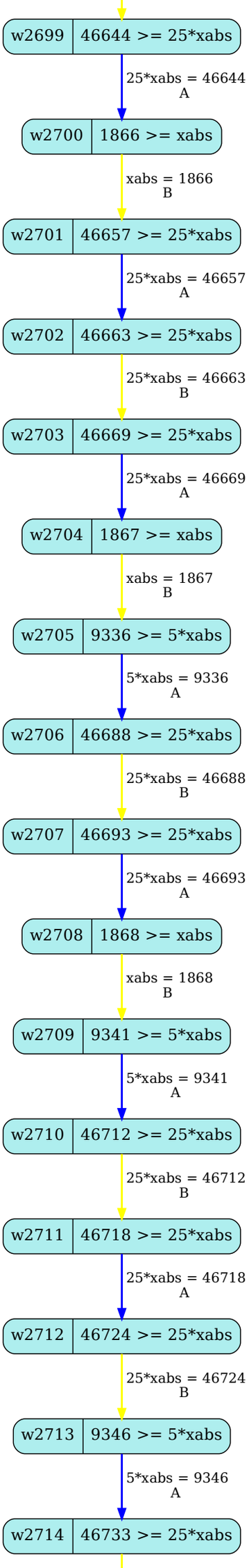
w2699
46644 >= 25*xabs
25*xabs = 46644
A
w2700
1866 >= xabs
xabs = 1866
B
w2701
46657 >= 25*xabs
25*xabs = 46657
A
w2702
46663 >= 25*xabs
25*xabs = 46663
B
w2703
46669 >= 25*xabs
25*xabs = 46669
A
w2704
1867 >= xabs
xabs = 1867
B
w2705
9336 >= 5*xabs
5*xabs = 9336
A
w2706
46688 >= 25*xabs
25*xabs = 46688
B
w2707
46693 >= 25*xabs
25*xabs = 46693
A
w2708
1868 >= xabs
xabs = 1868
B
w2709
9341 >= 5*xabs
5*xabs = 9341
A
w2710
46712 >= 25*xabs
25*xabs = 46712
B
w2711
46718 >= 25*xabs
25*xabs = 46718
A
w2712
46724 >= 25*xabs
25*xabs = 46724
B
w2713
9346 >= 5*xabs
5*xabs = 9346
A
w2714
46733 >= 25*xabs

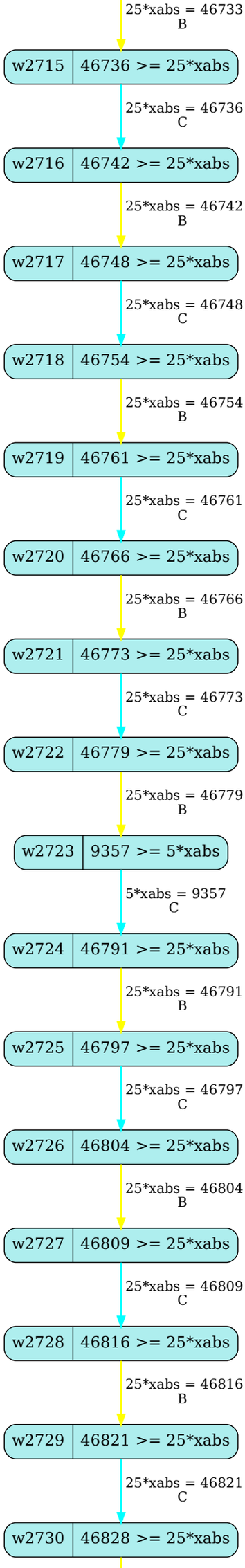
25*xabs = 46733
B
w2715
46736 >= 25*xabs
25*xabs = 46736
C
w2716
46742 >= 25*xabs
25*xabs = 46742
B
w2717
46748 >= 25*xabs
25*xabs = 46748
C
w2718
46754 >= 25*xabs
25*xabs = 46754
B
w2719
46761 >= 25*xabs
25*xabs = 46761
C
w2720
46766 >= 25*xabs
25*xabs = 46766
B
w2721
46773 >= 25*xabs
25*xabs = 46773
C
w2722
46779 >= 25*xabs
25*xabs = 46779
B
w2723
9357 >= 5*xabs
5*xabs = 9357
C
w2724
46791 >= 25*xabs
25*xabs = 46791
B
w2725
46797 >= 25*xabs
25*xabs = 46797
C
w2726
46804 >= 25*xabs
25*xabs = 46804
B
w2727
46809 >= 25*xabs
25*xabs = 46809
C
w2728
46816 >= 25*xabs
25*xabs = 46816
B
w2729
46821 >= 25*xabs
25*xabs = 46821
C
w2730
46828 >= 25*xabs

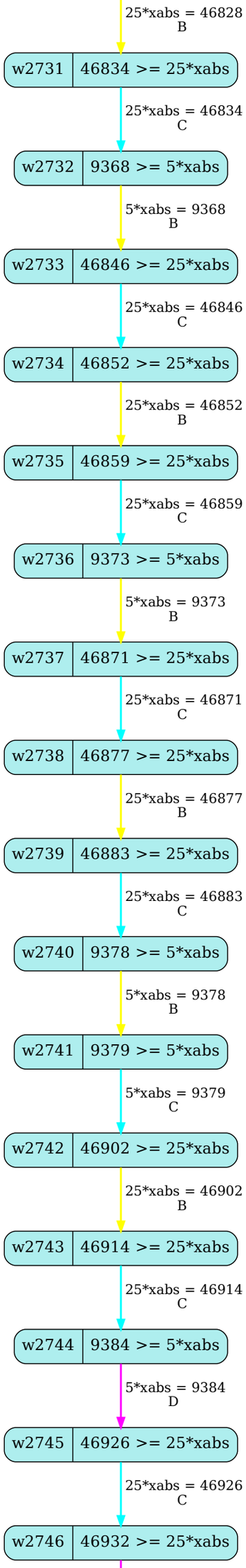
25*xabs = 46828
B
w2731
46834 >= 25*xabs
25*xabs = 46834
C
w2732
9368 >= 5*xabs
5*xabs = 9368
B
w2733
46846 >= 25*xabs
25*xabs = 46846
C
w2734
46852 >= 25*xabs
25*xabs = 46852
B
w2735
46859 >= 25*xabs
25*xabs = 46859
C
w2736
9373 >= 5*xabs
5*xabs = 9373
B
w2737
46871 >= 25*xabs
25*xabs = 46871
C
w2738
46877 >= 25*xabs
25*xabs = 46877
B
w2739
46883 >= 25*xabs
25*xabs = 46883
C
w2740
9378 >= 5*xabs
5*xabs = 9378
B
w2741
9379 >= 5*xabs
5*xabs = 9379
C
w2742
46902 >= 25*xabs
25*xabs = 46902
B
w2743
46914 >= 25*xabs
25*xabs = 46914
C
w2744
9384 >= 5*xabs
5*xabs = 9384
D
w2745
46926 >= 25*xabs
25*xabs = 46926
C
w2746
46932 >= 25*xabs

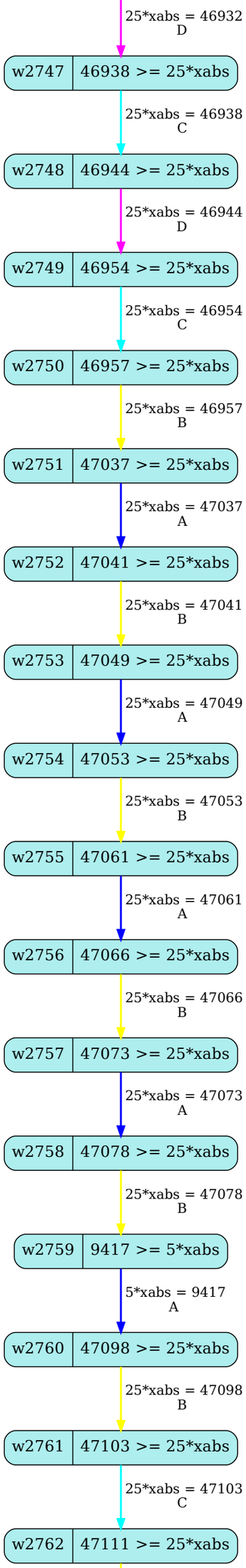
25*xabs = 46932
D
w2747
46938 >= 25*xabs
25*xabs = 46938
C
w2748
46944 >= 25*xabs
25*xabs = 46944
D
w2749
46954 >= 25*xabs
25*xabs = 46954
C
w2750
46957 >= 25*xabs
25*xabs = 46957
B
w2751
47037 >= 25*xabs
25*xabs = 47037
A
w2752
47041 >= 25*xabs
25*xabs = 47041
B
w2753
47049 >= 25*xabs
25*xabs = 47049
A
w2754
47053 >= 25*xabs
25*xabs = 47053
B
w2755
47061 >= 25*xabs
25*xabs = 47061
A
w2756
47066 >= 25*xabs
25*xabs = 47066
B
w2757
47073 >= 25*xabs
25*xabs = 47073
A
w2758
47078 >= 25*xabs
25*xabs = 47078
B
w2759
9417 >= 5*xabs
5*xabs = 9417
A
w2760
47098 >= 25*xabs
25*xabs = 47098
B
w2761
47103 >= 25*xabs
25*xabs = 47103
C
w2762
47111 >= 25*xabs

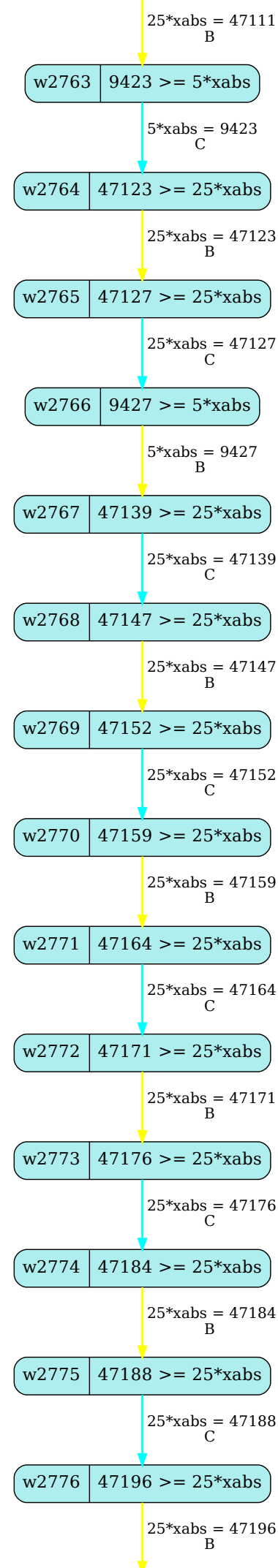
25*xabs = 47111
B
w2763
9423 >= 5*xabs
5*xabs = 9423
C
w2764
47123 >= 25*xabs
25*xabs = 47123
B
w2765
47127 >= 25*xabs
25*xabs = 47127
C
w2766
9427 >= 5*xabs
5*xabs = 9427
B
w2767
47139 >= 25*xabs
25*xabs = 47139
C
w2768
47147 >= 25*xabs
25*xabs = 47147
B
w2769
47152 >= 25*xabs
25*xabs = 47152
C
w2770
47159 >= 25*xabs
25*xabs = 47159
B
w2771
47164 >= 25*xabs
25*xabs = 47164
C
w2772
47171 >= 25*xabs
25*xabs = 47171
B
w2773
47176 >= 25*xabs
25*xabs = 47176
C
w2774
47184 >= 25*xabs
25*xabs = 47184
B
w2775
47188 >= 25*xabs
25*xabs = 47188
C
w2776
47196 >= 25*xabs
25*xabs = 47196
B

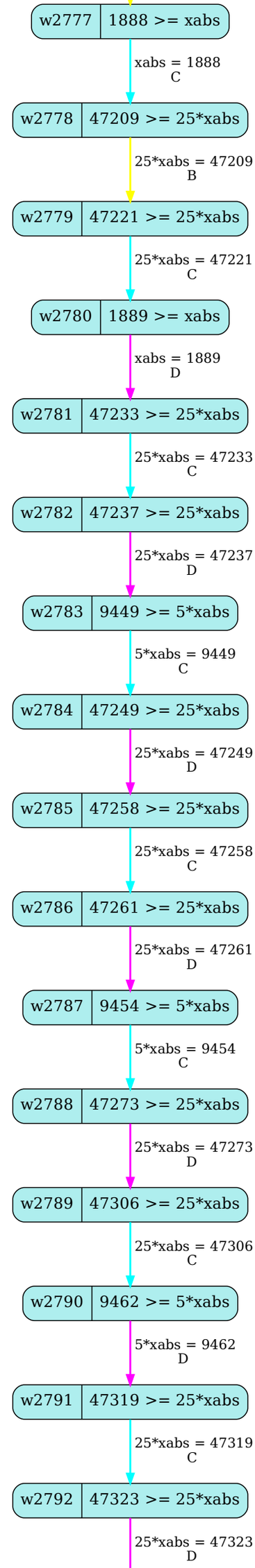
w2777
1888 >= xabs
xabs = 1888
C
w2778
47209 >= 25*xabs
25*xabs = 47209
B
w2779
47221 >= 25*xabs
25*xabs = 47221
C
w2780
1889 >= xabs
xabs = 1889
D
w2781
47233 >= 25*xabs
25*xabs = 47233
C
w2782
47237 >= 25*xabs
25*xabs = 47237
D
w2783
9449 >= 5*xabs
5*xabs = 9449
C
w2784
47249 >= 25*xabs
25*xabs = 47249
D
w2785
47258 >= 25*xabs
25*xabs = 47258
C
w2786
47261 >= 25*xabs
25*xabs = 47261
D
w2787
9454 >= 5*xabs
5*xabs = 9454
C
w2788
47273 >= 25*xabs
25*xabs = 47273
D
w2789
47306 >= 25*xabs
25*xabs = 47306
C
w2790
9462 >= 5*xabs
5*xabs = 9462
D
w2791
47319 >= 25*xabs
25*xabs = 47319
C
w2792
47323 >= 25*xabs
25*xabs = 47323
D

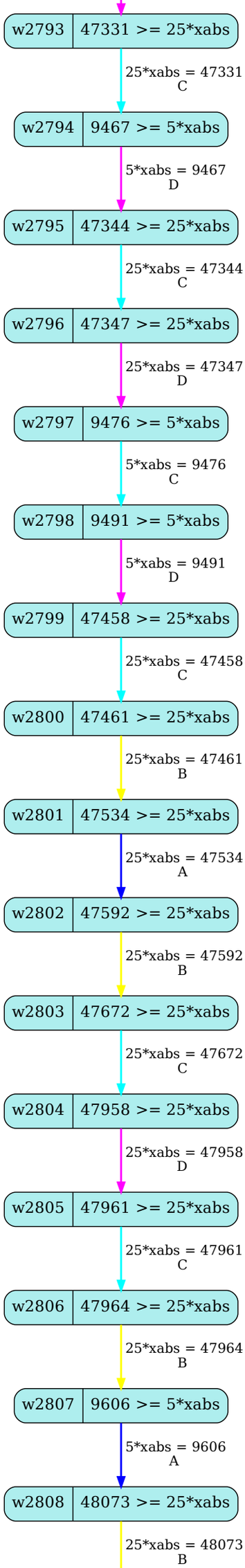
w2793
47331 >= 25*xabs
25*xabs = 47331
C
w2794
9467 >= 5*xabs
5*xabs = 9467
D
w2795
47344 >= 25*xabs
25*xabs = 47344
C
w2796
47347 >= 25*xabs
25*xabs = 47347
D
w2797
9476 >= 5*xabs
5*xabs = 9476
C
w2798
9491 >= 5*xabs
5*xabs = 9491
D
w2799
47458 >= 25*xabs
25*xabs = 47458
C
w2800
47461 >= 25*xabs
25*xabs = 47461
B
w2801
47534 >= 25*xabs
25*xabs = 47534
A
w2802
47592 >= 25*xabs
25*xabs = 47592
B
w2803
47672 >= 25*xabs
25*xabs = 47672
C
w2804
47958 >= 25*xabs
25*xabs = 47958
D
w2805
47961 >= 25*xabs
25*xabs = 47961
C
w2806
47964 >= 25*xabs
25*xabs = 47964
B
w2807
9606 >= 5*xabs
5*xabs = 9606
A
w2808
48073 >= 25*xabs
25*xabs = 48073
B

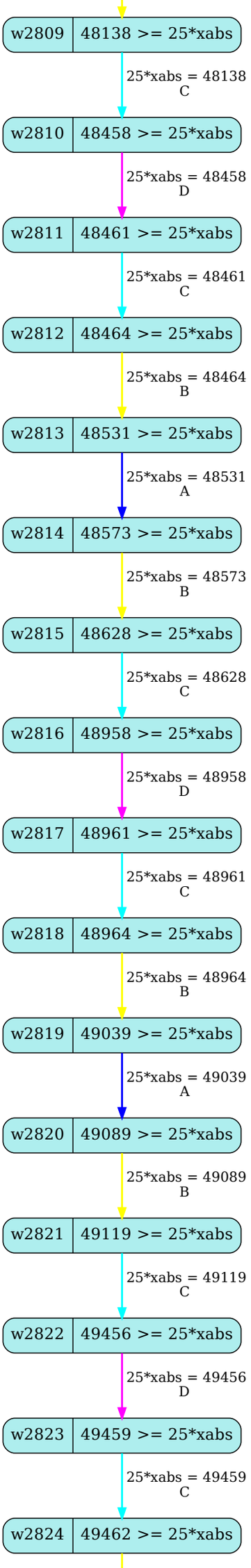
w2809
48138 >= 25*xabs
25*xabs = 48138
C
w2810
48458 >= 25*xabs
25*xabs = 48458
D
w2811
48461 >= 25*xabs
25*xabs = 48461
C
w2812
48464 >= 25*xabs
25*xabs = 48464
B
w2813
48531 >= 25*xabs
25*xabs = 48531
A
w2814
48573 >= 25*xabs
25*xabs = 48573
B
w2815
48628 >= 25*xabs
25*xabs = 48628
C
w2816
48958 >= 25*xabs
25*xabs = 48958
D
w2817
48961 >= 25*xabs
25*xabs = 48961
C
w2818
48964 >= 25*xabs
25*xabs = 48964
B
w2819
49039 >= 25*xabs
25*xabs = 49039
A
w2820
49089 >= 25*xabs
25*xabs = 49089
B
w2821
49119 >= 25*xabs
25*xabs = 49119
C
w2822
49456 >= 25*xabs
25*xabs = 49456
D
w2823
49459 >= 25*xabs
25*xabs = 49459
C
w2824
49462 >= 25*xabs

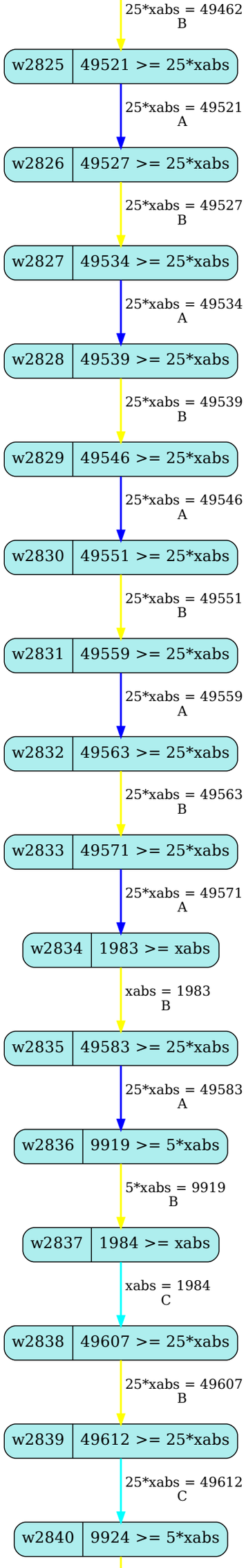
25*xabs = 49462
B
w2825
49521 >= 25*xabs
25*xabs = 49521
A
w2826
49527 >= 25*xabs
25*xabs = 49527
B
w2827
49534 >= 25*xabs
25*xabs = 49534
A
w2828
49539 >= 25*xabs
25*xabs = 49539
B
w2829
49546 >= 25*xabs
25*xabs = 49546
A
w2830
49551 >= 25*xabs
25*xabs = 49551
B
w2831
49559 >= 25*xabs
25*xabs = 49559
A
w2832
49563 >= 25*xabs
25*xabs = 49563
B
w2833
49571 >= 25*xabs
25*xabs = 49571
A
w2834
1983 >= xabs
xabs = 1983
B
w2835
49583 >= 25*xabs
25*xabs = 49583
A
w2836
9919 >= 5*xabs
5*xabs = 9919
B
w2837
1984 >= xabs
xabs = 1984
C
w2838
49607 >= 25*xabs
25*xabs = 49607
B
w2839
49612 >= 25*xabs
25*xabs = 49612
C
w2840
9924 >= 5*xabs

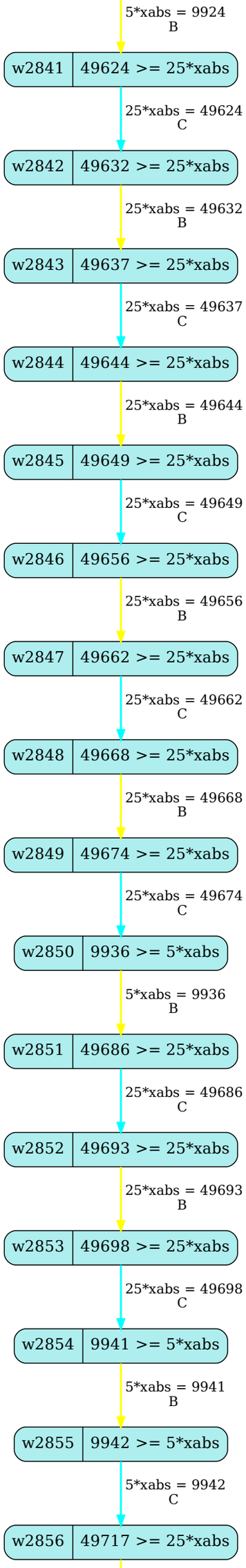
5*xabs = 9924
B
w2841
49624 >= 25*xabs
25*xabs = 49624
C
w2842
49632 >= 25*xabs
25*xabs = 49632
B
w2843
49637 >= 25*xabs
25*xabs = 49637
C
w2844
49644 >= 25*xabs
25*xabs = 49644
B
w2845
49649 >= 25*xabs
25*xabs = 49649
C
w2846
49656 >= 25*xabs
25*xabs = 49656
B
w2847
49662 >= 25*xabs
25*xabs = 49662
C
w2848
49668 >= 25*xabs
25*xabs = 49668
B
w2849
49674 >= 25*xabs
25*xabs = 49674
C
w2850
9936 >= 5*xabs
5*xabs = 9936
B
w2851
49686 >= 25*xabs
25*xabs = 49686
C
w2852
49693 >= 25*xabs
25*xabs = 49693
B
w2853
49698 >= 25*xabs
25*xabs = 49698
C
w2854
9941 >= 5*xabs
5*xabs = 9941
B
w2855
9942 >= 5*xabs
5*xabs = 9942
C
w2856
49717 >= 25*xabs

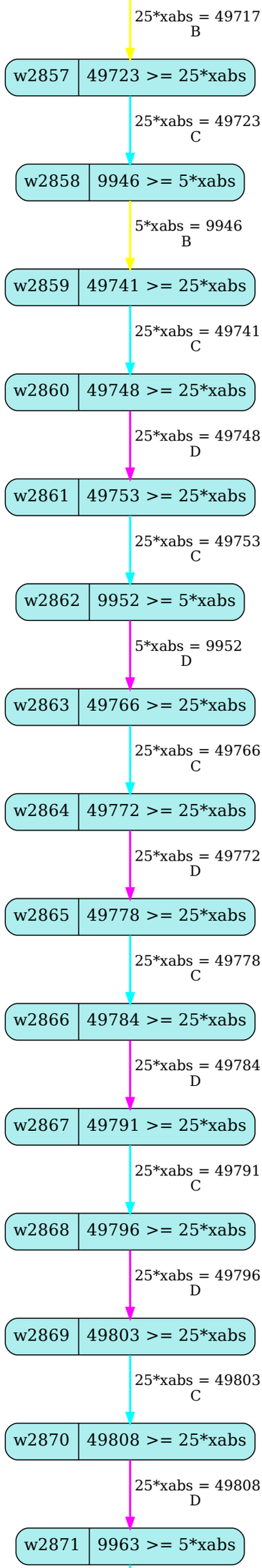
25*xabs = 49717
B
w2857
49723 >= 25*xabs
25*xabs = 49723
C
w2858
9946 >= 5*xabs
5*xabs = 9946
B
w2859
49741 >= 25*xabs
25*xabs = 49741
C
w2860
49748 >= 25*xabs
25*xabs = 49748
D
w2861
49753 >= 25*xabs
25*xabs = 49753
C
w2862
9952 >= 5*xabs
5*xabs = 9952
D
w2863
49766 >= 25*xabs
25*xabs = 49766
C
w2864
49772 >= 25*xabs
25*xabs = 49772
D
w2865
49778 >= 25*xabs
25*xabs = 49778
C
w2866
49784 >= 25*xabs
25*xabs = 49784
D
w2867
49791 >= 25*xabs
25*xabs = 49791
C
w2868
49796 >= 25*xabs
25*xabs = 49796
D
w2869
49803 >= 25*xabs
25*xabs = 49803
C
w2870
49808 >= 25*xabs
25*xabs = 49808
D
w2871
9963 >= 5*xabs

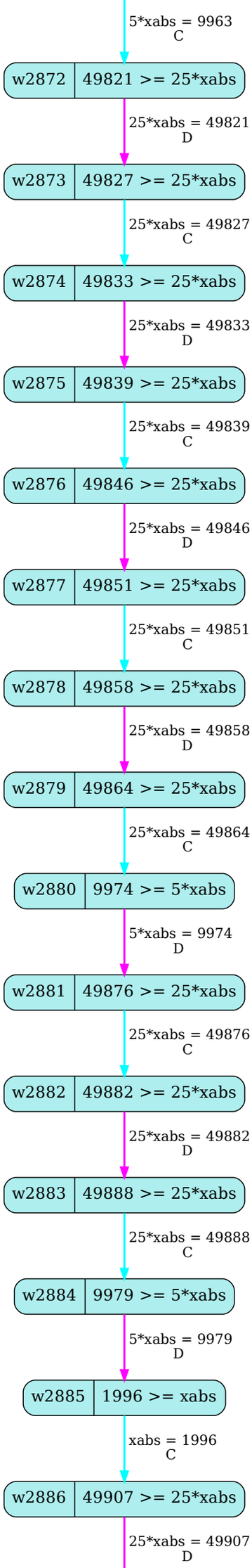
5*xabs = 9963
C
w2872
49821 >= 25*xabs
25*xabs = 49821
D
w2873
49827 >= 25*xabs
25*xabs = 49827
C
w2874
49833 >= 25*xabs
25*xabs = 49833
D
w2875
49839 >= 25*xabs
25*xabs = 49839
C
w2876
49846 >= 25*xabs
25*xabs = 49846
D
w2877
49851 >= 25*xabs
25*xabs = 49851
C
w2878
49858 >= 25*xabs
25*xabs = 49858
D
w2879
49864 >= 25*xabs
25*xabs = 49864
C
w2880
9974 >= 5*xabs
5*xabs = 9974
D
w2881
49876 >= 25*xabs
25*xabs = 49876
C
w2882
49882 >= 25*xabs
25*xabs = 49882
D
w2883
49888 >= 25*xabs
25*xabs = 49888
C
w2884
9979 >= 5*xabs
5*xabs = 9979
D
w2885
1996 >= xabs
xabs = 1996
C
w2886
49907 >= 25*xabs
25*xabs = 49907
D

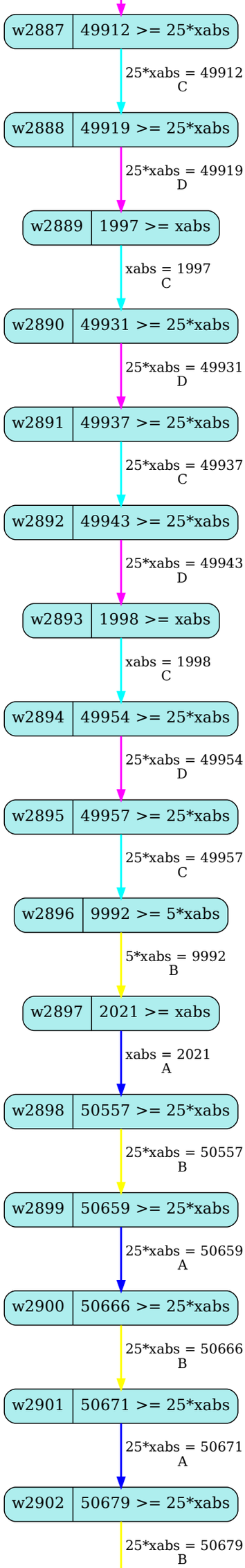
w2887
49912 >= 25*xabs
25*xabs = 49912
C
w2888
49919 >= 25*xabs
25*xabs = 49919
D
w2889
1997 >= xabs
xabs = 1997
C
w2890
49931 >= 25*xabs
25*xabs = 49931
D
w2891
49937 >= 25*xabs
25*xabs = 49937
C
w2892
49943 >= 25*xabs
25*xabs = 49943
D
w2893
1998 >= xabs
xabs = 1998
C
w2894
49954 >= 25*xabs
25*xabs = 49954
D
w2895
49957 >= 25*xabs
25*xabs = 49957
C
w2896
9992 >= 5*xabs
5*xabs = 9992
B
w2897
2021 >= xabs
xabs = 2021
A
w2898
50557 >= 25*xabs
25*xabs = 50557
B
w2899
50659 >= 25*xabs
25*xabs = 50659
A
w2900
50666 >= 25*xabs
25*xabs = 50666
B
w2901
50671 >= 25*xabs
25*xabs = 50671
A
w2902
50679 >= 25*xabs
25*xabs = 50679
B

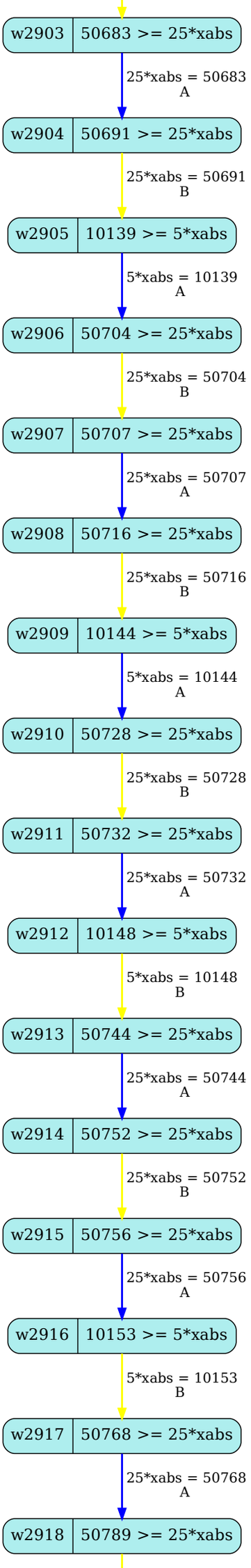
w2903
50683 >= 25*xabs
25*xabs = 50683
A
w2904
50691 >= 25*xabs
25*xabs = 50691
B
w2905
10139 >= 5*xabs
5*xabs = 10139
A
w2906
50704 >= 25*xabs
25*xabs = 50704
B
w2907
50707 >= 25*xabs
25*xabs = 50707
A
w2908
50716 >= 25*xabs
25*xabs = 50716
B
w2909
10144 >= 5*xabs
5*xabs = 10144
A
w2910
50728 >= 25*xabs
25*xabs = 50728
B
w2911
50732 >= 25*xabs
25*xabs = 50732
A
w2912
10148 >= 5*xabs
5*xabs = 10148
B
w2913
50744 >= 25*xabs
25*xabs = 50744
A
w2914
50752 >= 25*xabs
25*xabs = 50752
B
w2915
50756 >= 25*xabs
25*xabs = 50756
A
w2916
10153 >= 5*xabs
5*xabs = 10153
B
w2917
50768 >= 25*xabs
25*xabs = 50768
A
w2918
50789 >= 25*xabs

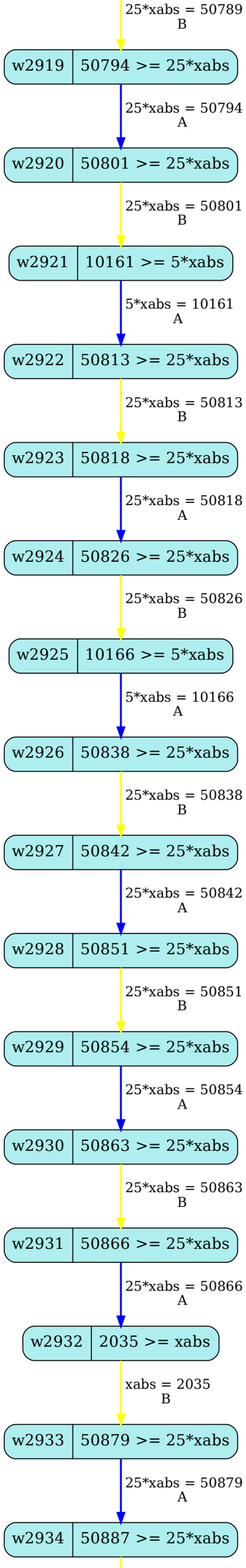
25*xabs = 50789
B
w2919
50794 >= 25*xabs
25*xabs = 50794
A
w2920
50801 >= 25*xabs
25*xabs = 50801
B
w2921
10161 >= 5*xabs
5*xabs = 10161
A
w2922
50813 >= 25*xabs
25*xabs = 50813
B
w2923
50818 >= 25*xabs
25*xabs = 50818
A
w2924
50826 >= 25*xabs
25*xabs = 50826
B
w2925
10166 >= 5*xabs
5*xabs = 10166
A
w2926
50838 >= 25*xabs
25*xabs = 50838
B
w2927
50842 >= 25*xabs
25*xabs = 50842
A
w2928
50851 >= 25*xabs
25*xabs = 50851
B
w2929
50854 >= 25*xabs
25*xabs = 50854
A
w2930
50863 >= 25*xabs
25*xabs = 50863
B
w2931
50866 >= 25*xabs
25*xabs = 50866
A
w2932
2035 >= xabs
xabs = 2035
B
w2933
50879 >= 25*xabs
25*xabs = 50879
A
w2934
50887 >= 25*xabs

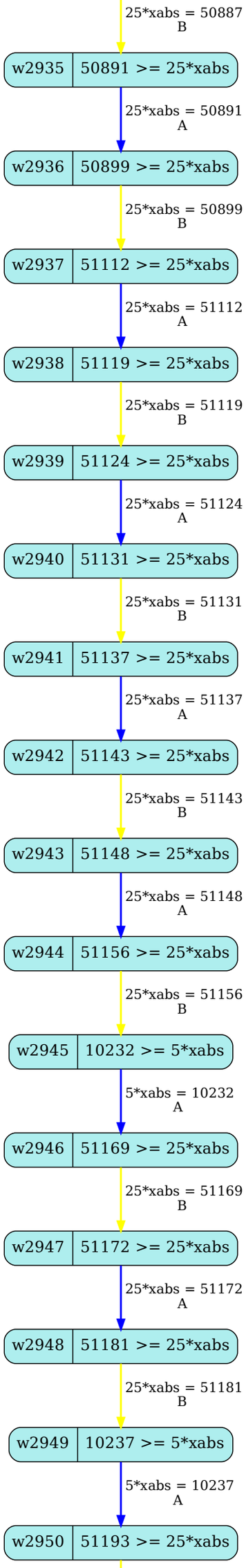
25*xabs = 50887
B
w2935
50891 >= 25*xabs
25*xabs = 50891
A
w2936
50899 >= 25*xabs
25*xabs = 50899
B
w2937
51112 >= 25*xabs
25*xabs = 51112
A
w2938
51119 >= 25*xabs
25*xabs = 51119
B
w2939
51124 >= 25*xabs
25*xabs = 51124
A
w2940
51131 >= 25*xabs
25*xabs = 51131
B
w2941
51137 >= 25*xabs
25*xabs = 51137
A
w2942
51143 >= 25*xabs
25*xabs = 51143
B
w2943
51148 >= 25*xabs
25*xabs = 51148
A
w2944
51156 >= 25*xabs
25*xabs = 51156
B
w2945
10232 >= 5*xabs
5*xabs = 10232
A
w2946
51169 >= 25*xabs
25*xabs = 51169
B
w2947
51172 >= 25*xabs
25*xabs = 51172
A
w2948
51181 >= 25*xabs
25*xabs = 51181
B
w2949
10237 >= 5*xabs
5*xabs = 10237
A
w2950
51193 >= 25*xabs

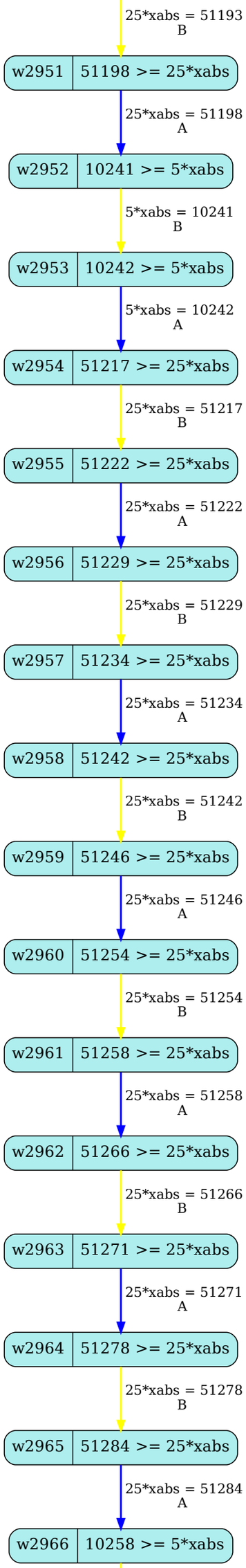
25*xabs = 51193
B
w2951
51198 >= 25*xabs
25*xabs = 51198
A
w2952
10241 >= 5*xabs
5*xabs = 10241
B
w2953
10242 >= 5*xabs
5*xabs = 10242
A
w2954
51217 >= 25*xabs
25*xabs = 51217
B
w2955
51222 >= 25*xabs
25*xabs = 51222
A
w2956
51229 >= 25*xabs
25*xabs = 51229
B
w2957
51234 >= 25*xabs
25*xabs = 51234
A
w2958
51242 >= 25*xabs
25*xabs = 51242
B
w2959
51246 >= 25*xabs
25*xabs = 51246
A
w2960
51254 >= 25*xabs
25*xabs = 51254
B
w2961
51258 >= 25*xabs
25*xabs = 51258
A
w2962
51266 >= 25*xabs
25*xabs = 51266
B
w2963
51271 >= 25*xabs
25*xabs = 51271
A
w2964
51278 >= 25*xabs
25*xabs = 51278
B
w2965
51284 >= 25*xabs
25*xabs = 51284
A
w2966
10258 >= 5*xabs

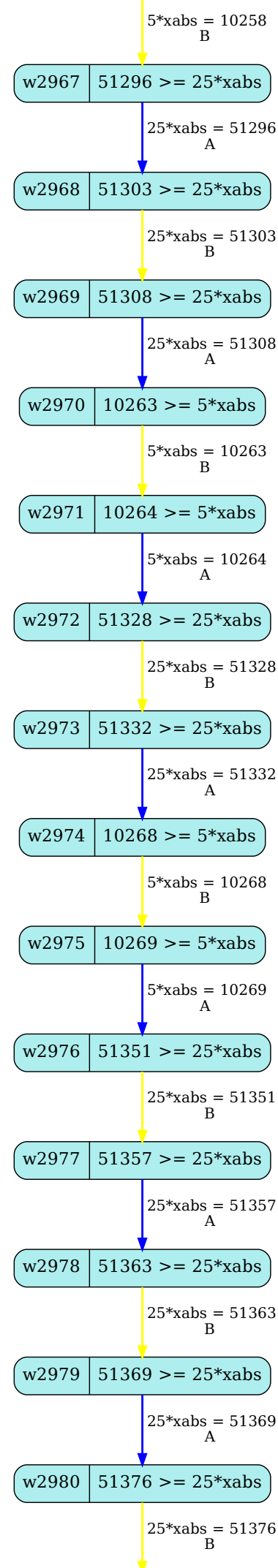
5*xabs = 10258
B
w2967
51296 >= 25*xabs
25*xabs = 51296
A
w2968
51303 >= 25*xabs
25*xabs = 51303
B
w2969
51308 >= 25*xabs
25*xabs = 51308
A
w2970
10263 >= 5*xabs
5*xabs = 10263
B
w2971
10264 >= 5*xabs
5*xabs = 10264
A
w2972
51328 >= 25*xabs
25*xabs = 51328
B
w2973
51332 >= 25*xabs
25*xabs = 51332
A
w2974
10268 >= 5*xabs
5*xabs = 10268
B
w2975
10269 >= 5*xabs
5*xabs = 10269
A
w2976
51351 >= 25*xabs
25*xabs = 51351
B
w2977
51357 >= 25*xabs
25*xabs = 51357
A
w2978
51363 >= 25*xabs
25*xabs = 51363
B
w2979
51369 >= 25*xabs
25*xabs = 51369
A
w2980
51376 >= 25*xabs
25*xabs = 51376
B

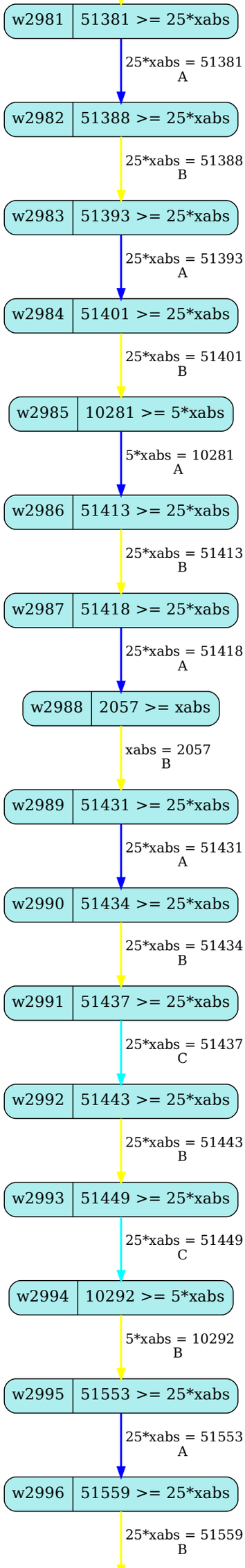
w2981
51381 >= 25*xabs
25*xabs = 51381
A
w2982
51388 >= 25*xabs
25*xabs = 51388
B
w2983
51393 >= 25*xabs
25*xabs = 51393
A
w2984
51401 >= 25*xabs
25*xabs = 51401
B
w2985
10281 >= 5*xabs
5*xabs = 10281
A
w2986
51413 >= 25*xabs
25*xabs = 51413
B
w2987
51418 >= 25*xabs
25*xabs = 51418
A
w2988
2057 >= xabs
xabs = 2057
B
w2989
51431 >= 25*xabs
25*xabs = 51431
A
w2990
51434 >= 25*xabs
25*xabs = 51434
B
w2991
51437 >= 25*xabs
25*xabs = 51437
C
w2992
51443 >= 25*xabs
25*xabs = 51443
B
w2993
51449 >= 25*xabs
25*xabs = 51449
C
w2994
10292 >= 5*xabs
5*xabs = 10292
B
w2995
51553 >= 25*xabs
25*xabs = 51553
A
w2996
51559 >= 25*xabs
25*xabs = 51559
B

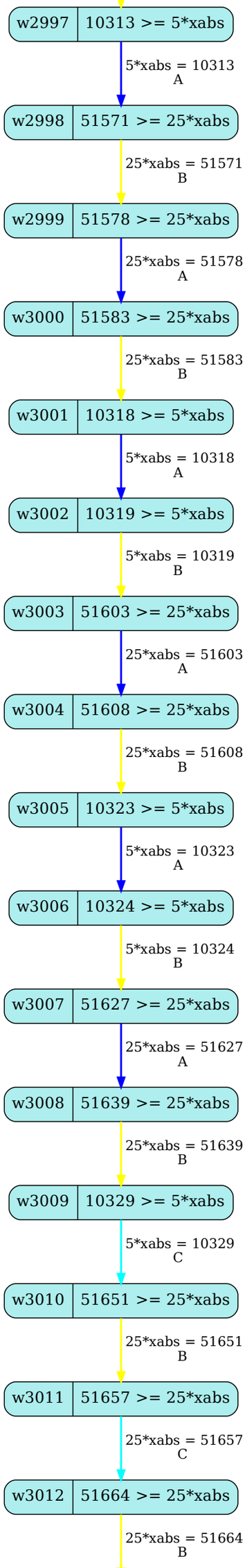
w2997
10313 >= 5*xabs
5*xabs = 10313
A
w2998
51571 >= 25*xabs
25*xabs = 51571
B
w2999
51578 >= 25*xabs
25*xabs = 51578
A
w3000
51583 >= 25*xabs
25*xabs = 51583
B
w3001
10318 >= 5*xabs
5*xabs = 10318
A
w3002
10319 >= 5*xabs
5*xabs = 10319
B
w3003
51603 >= 25*xabs
25*xabs = 51603
A
w3004
51608 >= 25*xabs
25*xabs = 51608
B
w3005
10323 >= 5*xabs
5*xabs = 10323
A
w3006
10324 >= 5*xabs
5*xabs = 10324
B
w3007
51627 >= 25*xabs
25*xabs = 51627
A
w3008
51639 >= 25*xabs
25*xabs = 51639
B
w3009
10329 >= 5*xabs
5*xabs = 10329
C
w3010
51651 >= 25*xabs
25*xabs = 51651
B
w3011
51657 >= 25*xabs
25*xabs = 51657
C
w3012
51664 >= 25*xabs
25*xabs = 51664
B

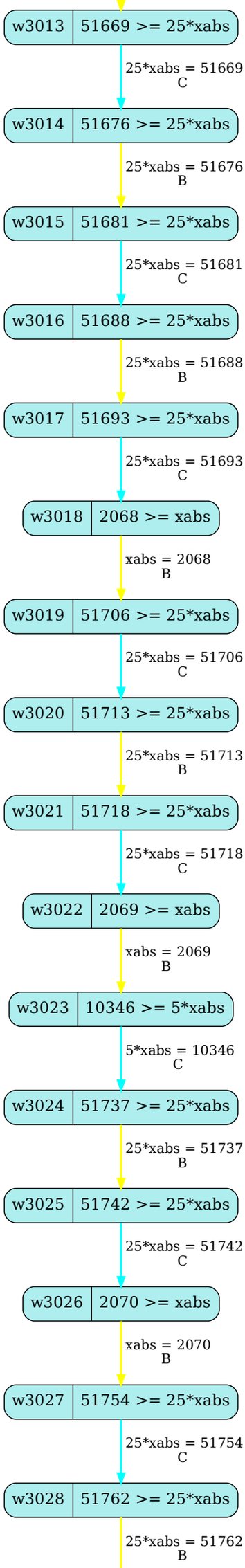
w3013
51669 >= 25*xabs
25*xabs = 51669
C
w3014
51676 >= 25*xabs
25*xabs = 51676
B
w3015
51681 >= 25*xabs
25*xabs = 51681
C
w3016
51688 >= 25*xabs
25*xabs = 51688
B
w3017
51693 >= 25*xabs
25*xabs = 51693
C
w3018
2068 >= xabs
xabs = 2068
B
w3019
51706 >= 25*xabs
25*xabs = 51706
C
w3020
51713 >= 25*xabs
25*xabs = 51713
B
w3021
51718 >= 25*xabs
25*xabs = 51718
C
w3022
2069 >= xabs
xabs = 2069
B
w3023
10346 >= 5*xabs
5*xabs = 10346
C
w3024
51737 >= 25*xabs
25*xabs = 51737
B
w3025
51742 >= 25*xabs
25*xabs = 51742
C
w3026
2070 >= xabs
xabs = 2070
B
w3027
51754 >= 25*xabs
25*xabs = 51754
C
w3028
51762 >= 25*xabs
25*xabs = 51762
B

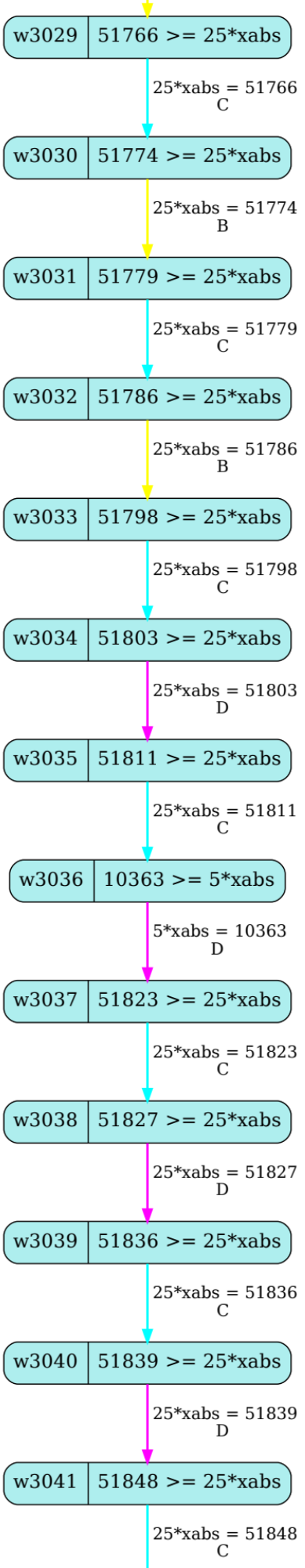
w3029
51766 >= 25*xabs
25*xabs = 51766
C
w3030
51774 >= 25*xabs
25*xabs = 51774
B
w3031
51779 >= 25*xabs
25*xabs = 51779
C
w3032
51786 >= 25*xabs
25*xabs = 51786
B
w3033
51798 >= 25*xabs
25*xabs = 51798
C
w3034
51803 >= 25*xabs
25*xabs = 51803
D
w3035
51811 >= 25*xabs
25*xabs = 51811
C
w3036
10363 >= 5*xabs
5*xabs = 10363
D
w3037
51823 >= 25*xabs
25*xabs = 51823
C
w3038
51827 >= 25*xabs
25*xabs = 51827
D
w3039
51836 >= 25*xabs
25*xabs = 51836
C
w3040
51839 >= 25*xabs
25*xabs = 51839
D
w3041
51848 >= 25*xabs
25*xabs = 51848
C

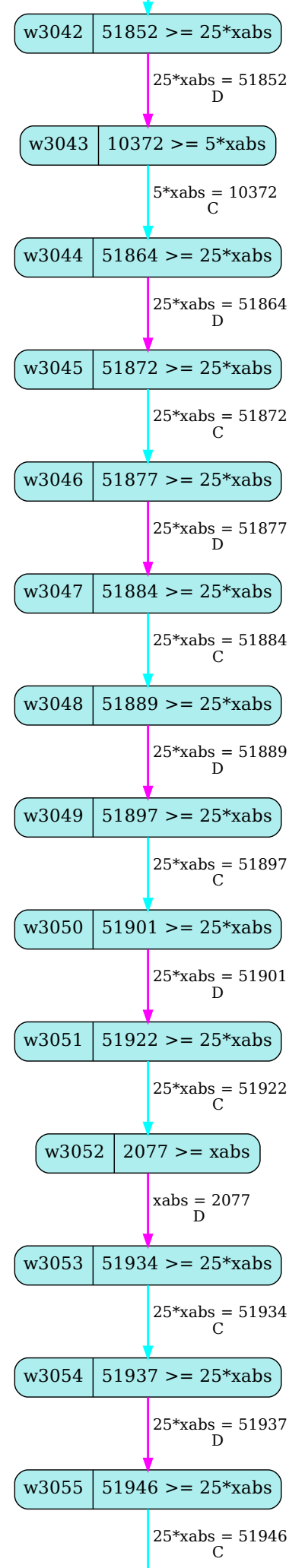
w3042
51852 >= 25*xabs
25*xabs = 51852
D
w3043
10372 >= 5*xabs
5*xabs = 10372
C
w3044
51864 >= 25*xabs
25*xabs = 51864
D
w3045
51872 >= 25*xabs
25*xabs = 51872
C
w3046
51877 >= 25*xabs
25*xabs = 51877
D
w3047
51884 >= 25*xabs
25*xabs = 51884
C
w3048
51889 >= 25*xabs
25*xabs = 51889
D
w3049
51897 >= 25*xabs
25*xabs = 51897
C
w3050
51901 >= 25*xabs
25*xabs = 51901
D
w3051
51922 >= 25*xabs
25*xabs = 51922
C
w3052
2077 >= xabs
xabs = 2077
D
w3053
51934 >= 25*xabs
25*xabs = 51934
C
w3054
51937 >= 25*xabs
25*xabs = 51937
D
w3055
51946 >= 25*xabs
25*xabs = 51946
C

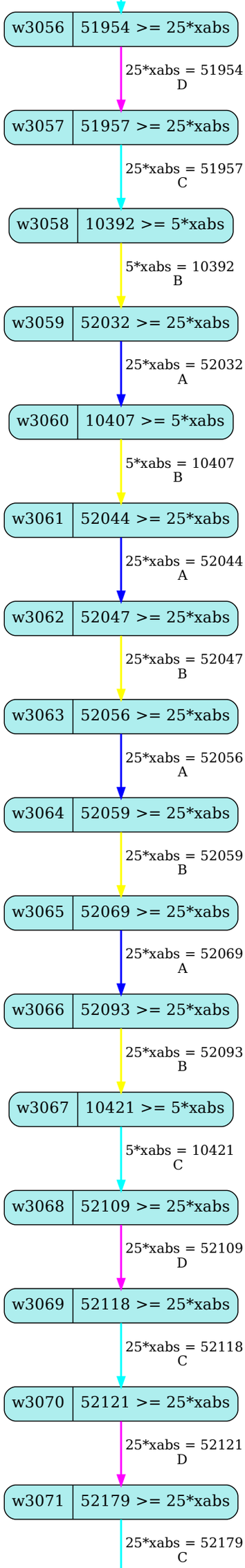
w3056
51954 >= 25*xabs
25*xabs = 51954
D
w3057
51957 >= 25*xabs
25*xabs = 51957
C
w3058
10392 >= 5*xabs
5*xabs = 10392
B
w3059
52032 >= 25*xabs
25*xabs = 52032
A
w3060
10407 >= 5*xabs
5*xabs = 10407
B
w3061
52044 >= 25*xabs
25*xabs = 52044
A
w3062
52047 >= 25*xabs
25*xabs = 52047
B
w3063
52056 >= 25*xabs
25*xabs = 52056
A
w3064
52059 >= 25*xabs
25*xabs = 52059
B
w3065
52069 >= 25*xabs
25*xabs = 52069
A
w3066
52093 >= 25*xabs
25*xabs = 52093
B
w3067
10421 >= 5*xabs
5*xabs = 10421
C
w3068
52109 >= 25*xabs
25*xabs = 52109
D
w3069
52118 >= 25*xabs
25*xabs = 52118
C
w3070
52121 >= 25*xabs
25*xabs = 52121
D
w3071
52179 >= 25*xabs
25*xabs = 52179
C

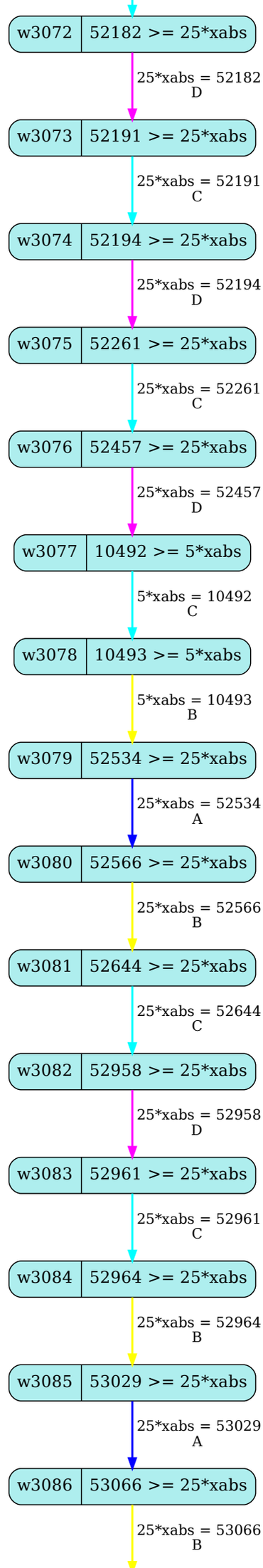
w3072
52182 >= 25*xabs
25*xabs = 52182
D
w3073
52191 >= 25*xabs
25*xabs = 52191
C
w3074
52194 >= 25*xabs
25*xabs = 52194
D
w3075
52261 >= 25*xabs
25*xabs = 52261
C
w3076
52457 >= 25*xabs
25*xabs = 52457
D
w3077
10492 >= 5*xabs
5*xabs = 10492
C
w3078
10493 >= 5*xabs
5*xabs = 10493
B
w3079
52534 >= 25*xabs
25*xabs = 52534
A
w3080
52566 >= 25*xabs
25*xabs = 52566
B
w3081
52644 >= 25*xabs
25*xabs = 52644
C
w3082
52958 >= 25*xabs
25*xabs = 52958
D
w3083
52961 >= 25*xabs
25*xabs = 52961
C
w3084
52964 >= 25*xabs
25*xabs = 52964
B
w3085
53029 >= 25*xabs
25*xabs = 53029
A
w3086
53066 >= 25*xabs
25*xabs = 53066
B

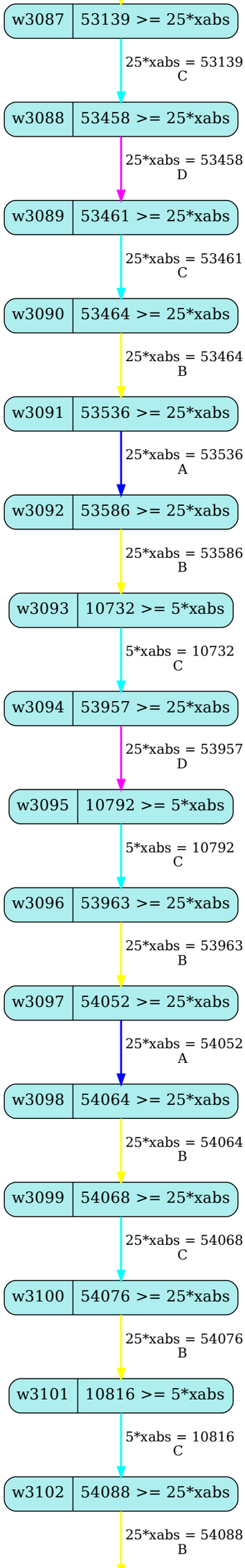
w3087
53139 >= 25*xabs
25*xabs = 53139
C
w3088
53458 >= 25*xabs
25*xabs = 53458
D
w3089
53461 >= 25*xabs
25*xabs = 53461
C
w3090
53464 >= 25*xabs
25*xabs = 53464
B
w3091
53536 >= 25*xabs
25*xabs = 53536
A
w3092
53586 >= 25*xabs
25*xabs = 53586
B
w3093
10732 >= 5*xabs
5*xabs = 10732
C
w3094
53957 >= 25*xabs
25*xabs = 53957
D
w3095
10792 >= 5*xabs
5*xabs = 10792
C
w3096
53963 >= 25*xabs
25*xabs = 53963
B
w3097
54052 >= 25*xabs
25*xabs = 54052
A
w3098
54064 >= 25*xabs
25*xabs = 54064
B
w3099
54068 >= 25*xabs
25*xabs = 54068
C
w3100
54076 >= 25*xabs
25*xabs = 54076
B
w3101
10816 >= 5*xabs
5*xabs = 10816
C
w3102
54088 >= 25*xabs
25*xabs = 54088
B

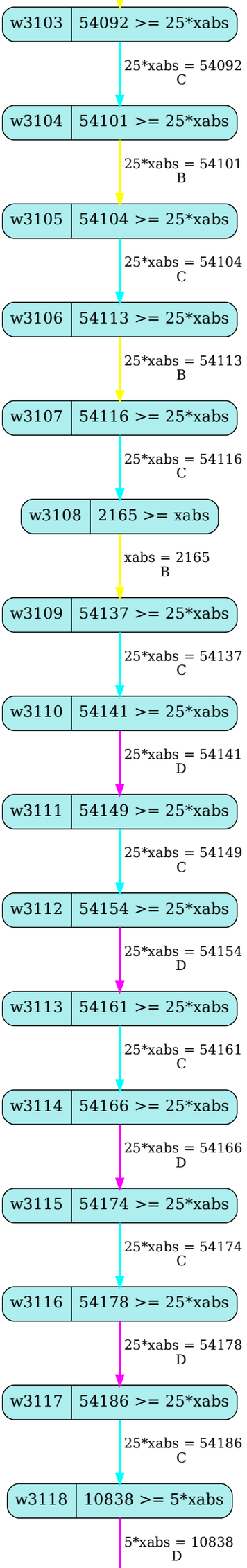
w3103
54092 >= 25*xabs
25*xabs = 54092
C
w3104
54101 >= 25*xabs
25*xabs = 54101
B
w3105
54104 >= 25*xabs
25*xabs = 54104
C
w3106
54113 >= 25*xabs
25*xabs = 54113
B
w3107
54116 >= 25*xabs
25*xabs = 54116
C
w3108
2165 >= xabs
xabs = 2165
B
w3109
54137 >= 25*xabs
25*xabs = 54137
C
w3110
54141 >= 25*xabs
25*xabs = 54141
D
w3111
54149 >= 25*xabs
25*xabs = 54149
C
w3112
54154 >= 25*xabs
25*xabs = 54154
D
w3113
54161 >= 25*xabs
25*xabs = 54161
C
w3114
54166 >= 25*xabs
25*xabs = 54166
D
w3115
54174 >= 25*xabs
25*xabs = 54174
C
w3116
54178 >= 25*xabs
25*xabs = 54178
D
w3117
54186 >= 25*xabs
25*xabs = 54186
C
w3118
10838 >= 5*xabs
5*xabs = 10838
D

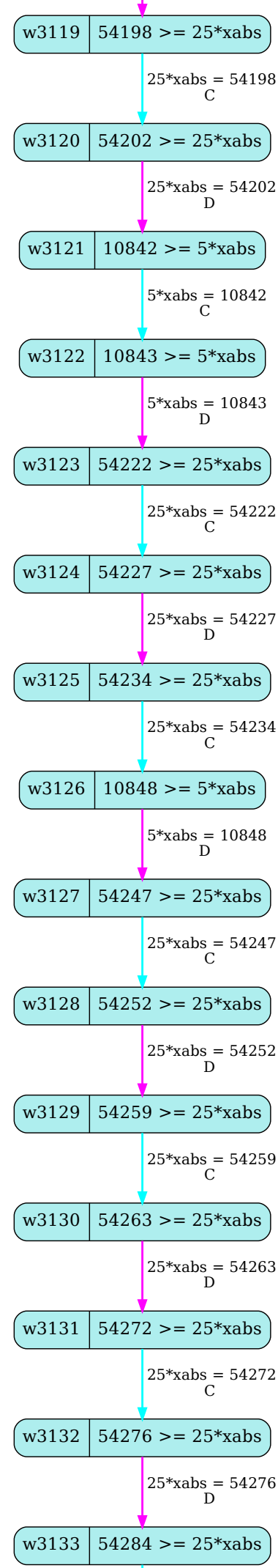
w3119
54198 >= 25*xabs
25*xabs = 54198
C
w3120
54202 >= 25*xabs
25*xabs = 54202
D
w3121
10842 >= 5*xabs
5*xabs = 10842
C
w3122
10843 >= 5*xabs
5*xabs = 10843
D
w3123
54222 >= 25*xabs
25*xabs = 54222
C
w3124
54227 >= 25*xabs
25*xabs = 54227
D
w3125
54234 >= 25*xabs
25*xabs = 54234
C
w3126
10848 >= 5*xabs
5*xabs = 10848
D
w3127
54247 >= 25*xabs
25*xabs = 54247
C
w3128
54252 >= 25*xabs
25*xabs = 54252
D
w3129
54259 >= 25*xabs
25*xabs = 54259
C
w3130
54263 >= 25*xabs
25*xabs = 54263
D
w3131
54272 >= 25*xabs
25*xabs = 54272
C
w3132
54276 >= 25*xabs
25*xabs = 54276
D
w3133
54284 >= 25*xabs

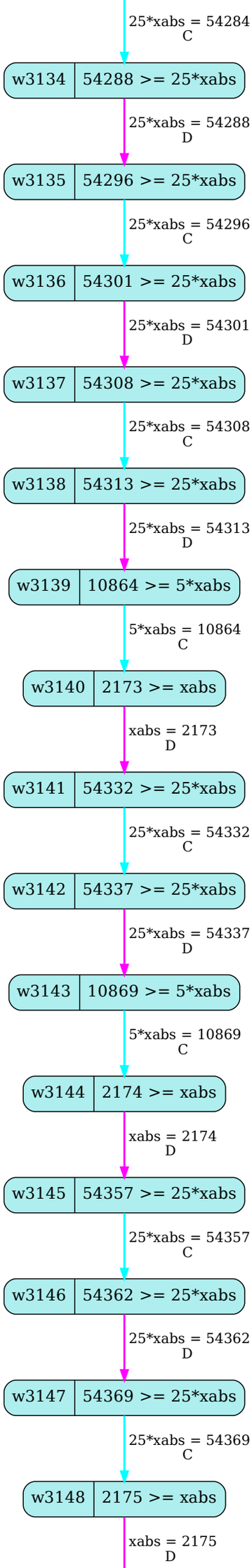
25*xabs = 54284
C
w3134
54288 >= 25*xabs
25*xabs = 54288
D
w3135
54296 >= 25*xabs
25*xabs = 54296
C
w3136
54301 >= 25*xabs
25*xabs = 54301
D
w3137
54308 >= 25*xabs
25*xabs = 54308
C
w3138
54313 >= 25*xabs
25*xabs = 54313
D
w3139
10864 >= 5*xabs
5*xabs = 10864
C
w3140
2173 >= xabs
xabs = 2173
D
w3141
54332 >= 25*xabs
25*xabs = 54332
C
w3142
54337 >= 25*xabs
25*xabs = 54337
D
w3143
10869 >= 5*xabs
5*xabs = 10869
C
w3144
2174 >= xabs
xabs = 2174
D
w3145
54357 >= 25*xabs
25*xabs = 54357
C
w3146
54362 >= 25*xabs
25*xabs = 54362
D
w3147
54369 >= 25*xabs
25*xabs = 54369
C
w3148
2175 >= xabs
xabs = 2175
D

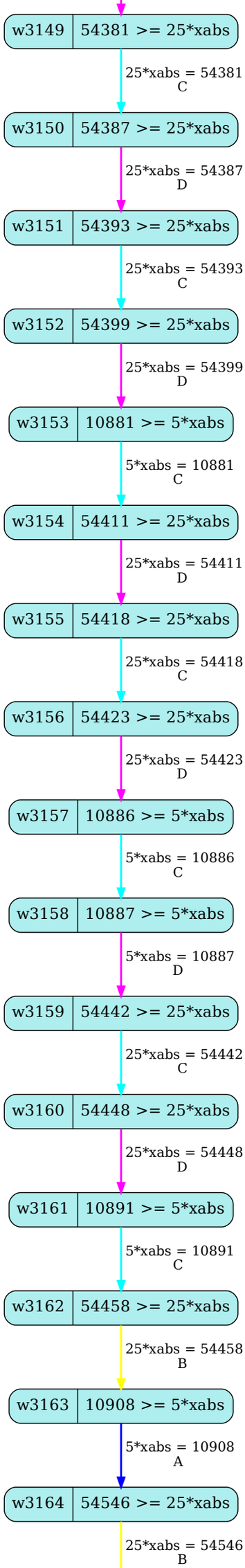
w3149
54381 >= 25*xabs
25*xabs = 54381
C
w3150
54387 >= 25*xabs
25*xabs = 54387
D
w3151
54393 >= 25*xabs
25*xabs = 54393
C
w3152
54399 >= 25*xabs
25*xabs = 54399
D
w3153
10881 >= 5*xabs
5*xabs = 10881
C
w3154
54411 >= 25*xabs
25*xabs = 54411
D
w3155
54418 >= 25*xabs
25*xabs = 54418
C
w3156
54423 >= 25*xabs
25*xabs = 54423
D
w3157
10886 >= 5*xabs
5*xabs = 10886
C
w3158
10887 >= 5*xabs
5*xabs = 10887
D
w3159
54442 >= 25*xabs
25*xabs = 54442
C
w3160
54448 >= 25*xabs
25*xabs = 54448
D
w3161
10891 >= 5*xabs
5*xabs = 10891
C
w3162
54458 >= 25*xabs
25*xabs = 54458
B
w3163
10908 >= 5*xabs
5*xabs = 10908
A
w3164
54546 >= 25*xabs
25*xabs = 54546
B

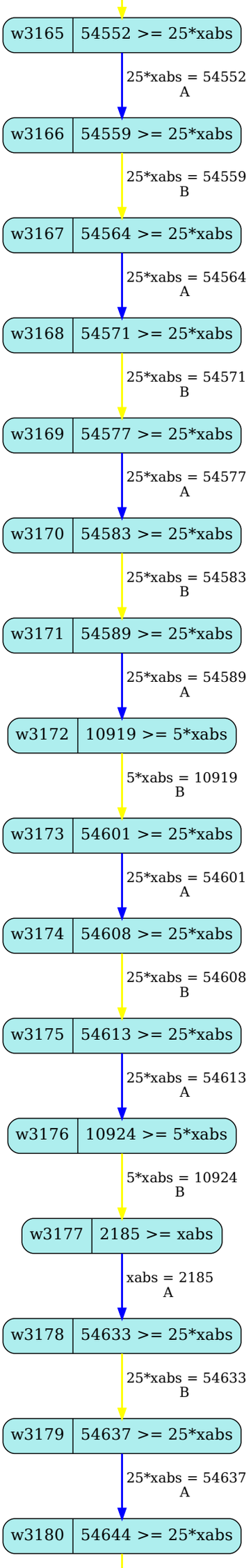
w3165
54552 >= 25*xabs
25*xabs = 54552
A
w3166
54559 >= 25*xabs
25*xabs = 54559
B
w3167
54564 >= 25*xabs
25*xabs = 54564
A
w3168
54571 >= 25*xabs
25*xabs = 54571
B
w3169
54577 >= 25*xabs
25*xabs = 54577
A
w3170
54583 >= 25*xabs
25*xabs = 54583
B
w3171
54589 >= 25*xabs
25*xabs = 54589
A
w3172
10919 >= 5*xabs
5*xabs = 10919
B
w3173
54601 >= 25*xabs
25*xabs = 54601
A
w3174
54608 >= 25*xabs
25*xabs = 54608
B
w3175
54613 >= 25*xabs
25*xabs = 54613
A
w3176
10924 >= 5*xabs
5*xabs = 10924
B
w3177
2185 >= xabs
xabs = 2185
A
w3178
54633 >= 25*xabs
25*xabs = 54633
B
w3179
54637 >= 25*xabs
25*xabs = 54637
A
w3180
54644 >= 25*xabs

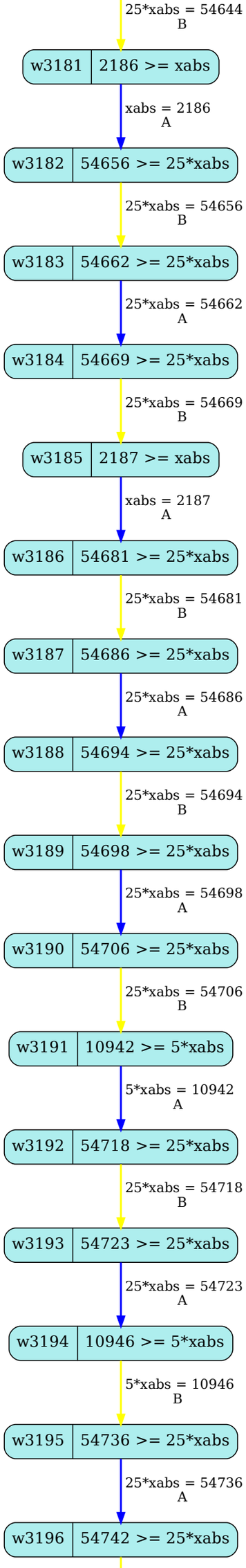
25*xabs = 54644
B
w3181
2186 >= xabs
xabs = 2186
A
w3182
54656 >= 25*xabs
25*xabs = 54656
B
w3183
54662 >= 25*xabs
25*xabs = 54662
A
w3184
54669 >= 25*xabs
25*xabs = 54669
B
w3185
2187 >= xabs
xabs = 2187
A
w3186
54681 >= 25*xabs
25*xabs = 54681
B
w3187
54686 >= 25*xabs
25*xabs = 54686
A
w3188
54694 >= 25*xabs
25*xabs = 54694
B
w3189
54698 >= 25*xabs
25*xabs = 54698
A
w3190
54706 >= 25*xabs
25*xabs = 54706
B
w3191
10942 >= 5*xabs
5*xabs = 10942
A
w3192
54718 >= 25*xabs
25*xabs = 54718
B
w3193
54723 >= 25*xabs
25*xabs = 54723
A
w3194
10946 >= 5*xabs
5*xabs = 10946
B
w3195
54736 >= 25*xabs
25*xabs = 54736
A
w3196
54742 >= 25*xabs

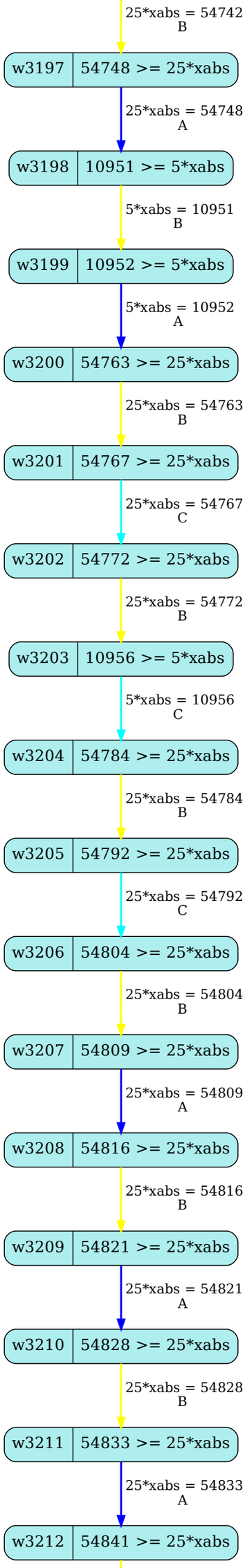
25*xabs = 54742
B
w3197
54748 >= 25*xabs
25*xabs = 54748
A
w3198
10951 >= 5*xabs
5*xabs = 10951
B
w3199
10952 >= 5*xabs
5*xabs = 10952
A
w3200
54763 >= 25*xabs
25*xabs = 54763
B
w3201
54767 >= 25*xabs
25*xabs = 54767
C
w3202
54772 >= 25*xabs
25*xabs = 54772
B
w3203
10956 >= 5*xabs
5*xabs = 10956
C
w3204
54784 >= 25*xabs
25*xabs = 54784
B
w3205
54792 >= 25*xabs
25*xabs = 54792
C
w3206
54804 >= 25*xabs
25*xabs = 54804
B
w3207
54809 >= 25*xabs
25*xabs = 54809
A
w3208
54816 >= 25*xabs
25*xabs = 54816
B
w3209
54821 >= 25*xabs
25*xabs = 54821
A
w3210
54828 >= 25*xabs
25*xabs = 54828
B
w3211
54833 >= 25*xabs
25*xabs = 54833
A
w3212
54841 >= 25*xabs

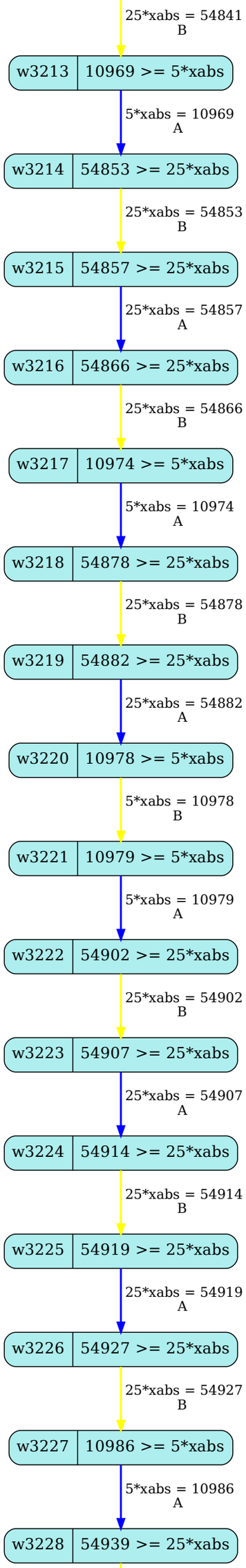
25*xabs = 54841
B
w3213
10969 >= 5*xabs
5*xabs = 10969
A
w3214
54853 >= 25*xabs
25*xabs = 54853
B
w3215
54857 >= 25*xabs
25*xabs = 54857
A
w3216
54866 >= 25*xabs
25*xabs = 54866
B
w3217
10974 >= 5*xabs
5*xabs = 10974
A
w3218
54878 >= 25*xabs
25*xabs = 54878
B
w3219
54882 >= 25*xabs
25*xabs = 54882
A
w3220
10978 >= 5*xabs
5*xabs = 10978
B
w3221
10979 >= 5*xabs
5*xabs = 10979
A
w3222
54902 >= 25*xabs
25*xabs = 54902
B
w3223
54907 >= 25*xabs
25*xabs = 54907
A
w3224
54914 >= 25*xabs
25*xabs = 54914
B
w3225
54919 >= 25*xabs
25*xabs = 54919
A
w3226
54927 >= 25*xabs
25*xabs = 54927
B
w3227
10986 >= 5*xabs
5*xabs = 10986
A
w3228
54939 >= 25*xabs

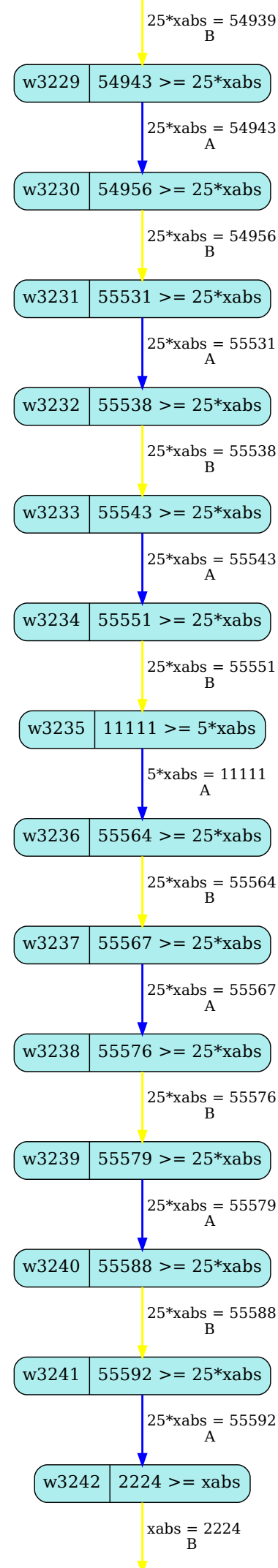
25*xabs = 54939
B
w3229
54943 >= 25*xabs
25*xabs = 54943
A
w3230
54956 >= 25*xabs
25*xabs = 54956
B
w3231
55531 >= 25*xabs
25*xabs = 55531
A
w3232
55538 >= 25*xabs
25*xabs = 55538
B
w3233
55543 >= 25*xabs
25*xabs = 55543
A
w3234
55551 >= 25*xabs
25*xabs = 55551
B
w3235
11111 >= 5*xabs
5*xabs = 11111
A
w3236
55564 >= 25*xabs
25*xabs = 55564
B
w3237
55567 >= 25*xabs
25*xabs = 55567
A
w3238
55576 >= 25*xabs
25*xabs = 55576
B
w3239
55579 >= 25*xabs
25*xabs = 55579
A
w3240
55588 >= 25*xabs
25*xabs = 55588
B
w3241
55592 >= 25*xabs
25*xabs = 55592
A
w3242
2224 >= xabs
xabs = 2224
B

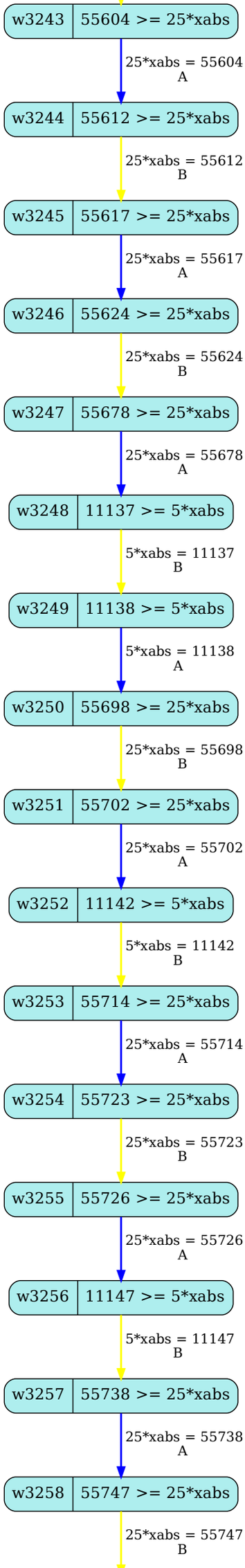
w3243
55604 >= 25*xabs
25*xabs = 55604
A
w3244
55612 >= 25*xabs
25*xabs = 55612
B
w3245
55617 >= 25*xabs
25*xabs = 55617
A
w3246
55624 >= 25*xabs
25*xabs = 55624
B
w3247
55678 >= 25*xabs
25*xabs = 55678
A
w3248
11137 >= 5*xabs
5*xabs = 11137
B
w3249
11138 >= 5*xabs
5*xabs = 11138
A
w3250
55698 >= 25*xabs
25*xabs = 55698
B
w3251
55702 >= 25*xabs
25*xabs = 55702
A
w3252
11142 >= 5*xabs
5*xabs = 11142
B
w3253
55714 >= 25*xabs
25*xabs = 55714
A
w3254
55723 >= 25*xabs
25*xabs = 55723
B
w3255
55726 >= 25*xabs
25*xabs = 55726
A
w3256
11147 >= 5*xabs
5*xabs = 11147
B
w3257
55738 >= 25*xabs
25*xabs = 55738
A
w3258
55747 >= 25*xabs
25*xabs = 55747
B

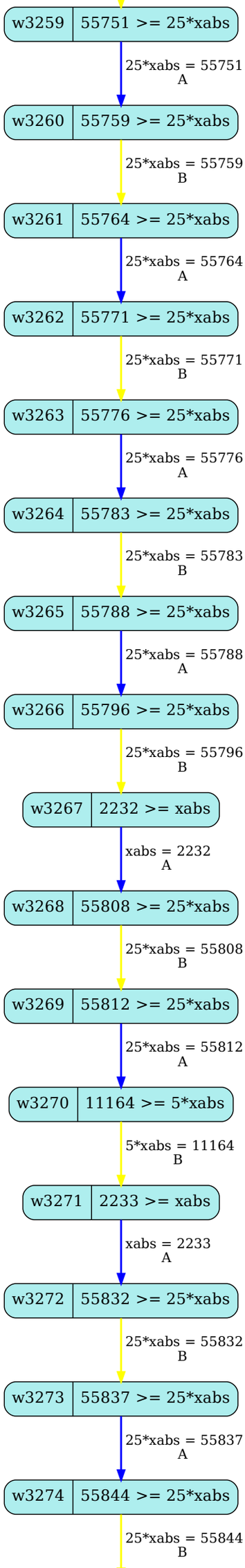
w3259
55751 >= 25*xabs
25*xabs = 55751
A
w3260
55759 >= 25*xabs
25*xabs = 55759
B
w3261
55764 >= 25*xabs
25*xabs = 55764
A
w3262
55771 >= 25*xabs
25*xabs = 55771
B
w3263
55776 >= 25*xabs
25*xabs = 55776
A
w3264
55783 >= 25*xabs
25*xabs = 55783
B
w3265
55788 >= 25*xabs
25*xabs = 55788
A
w3266
55796 >= 25*xabs
25*xabs = 55796
B
w3267
2232 >= xabs
xabs = 2232
A
w3268
55808 >= 25*xabs
25*xabs = 55808
B
w3269
55812 >= 25*xabs
25*xabs = 55812
A
w3270
11164 >= 5*xabs
5*xabs = 11164
B
w3271
2233 >= xabs
xabs = 2233
A
w3272
55832 >= 25*xabs
25*xabs = 55832
B
w3273
55837 >= 25*xabs
25*xabs = 55837
A
w3274
55844 >= 25*xabs
25*xabs = 55844
B

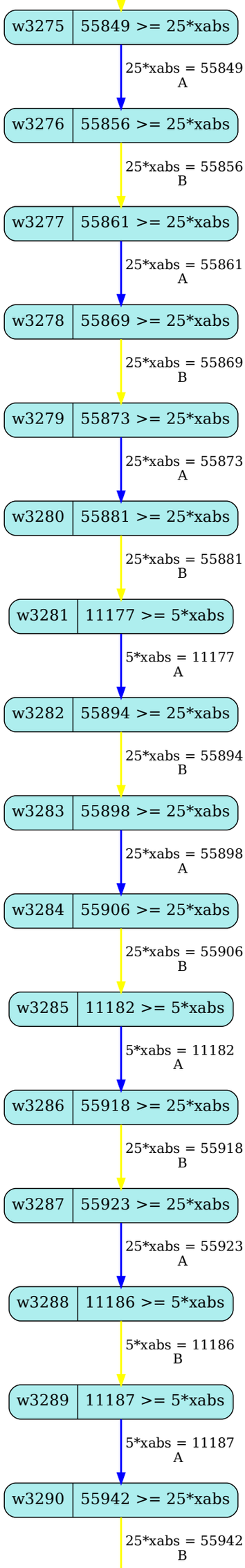
w3275
55849 >= 25*xabs
25*xabs = 55849
A
w3276
55856 >= 25*xabs
25*xabs = 55856
B
w3277
55861 >= 25*xabs
25*xabs = 55861
A
w3278
55869 >= 25*xabs
25*xabs = 55869
B
w3279
55873 >= 25*xabs
25*xabs = 55873
A
w3280
55881 >= 25*xabs
25*xabs = 55881
B
w3281
11177 >= 5*xabs
5*xabs = 11177
A
w3282
55894 >= 25*xabs
25*xabs = 55894
B
w3283
55898 >= 25*xabs
25*xabs = 55898
A
w3284
55906 >= 25*xabs
25*xabs = 55906
B
w3285
11182 >= 5*xabs
5*xabs = 11182
A
w3286
55918 >= 25*xabs
25*xabs = 55918
B
w3287
55923 >= 25*xabs
25*xabs = 55923
A
w3288
11186 >= 5*xabs
5*xabs = 11186
B
w3289
11187 >= 5*xabs
5*xabs = 11187
A
w3290
55942 >= 25*xabs
25*xabs = 55942
B

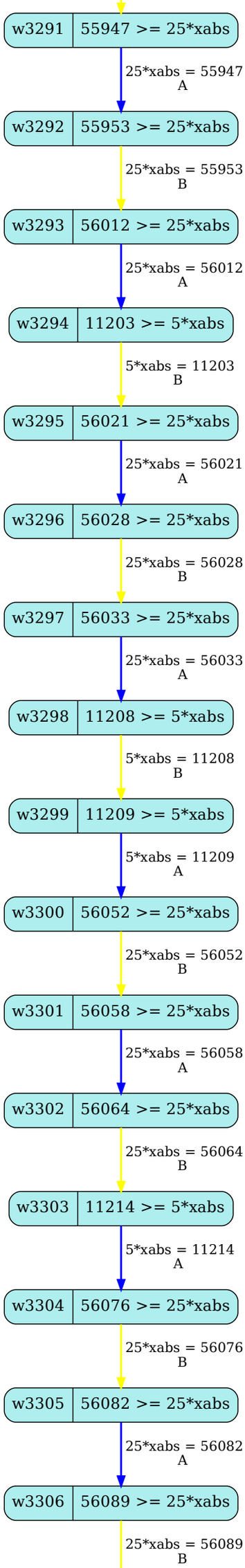
w3291
55947 >= 25*xabs
25*xabs = 55947
A
w3292
55953 >= 25*xabs
25*xabs = 55953
B
w3293
56012 >= 25*xabs
25*xabs = 56012
A
w3294
11203 >= 5*xabs
5*xabs = 11203
B
w3295
56021 >= 25*xabs
25*xabs = 56021
A
w3296
56028 >= 25*xabs
25*xabs = 56028
B
w3297
56033 >= 25*xabs
25*xabs = 56033
A
w3298
11208 >= 5*xabs
5*xabs = 11208
B
w3299
11209 >= 5*xabs
5*xabs = 11209
A
w3300
56052 >= 25*xabs
25*xabs = 56052
B
w3301
56058 >= 25*xabs
25*xabs = 56058
A
w3302
56064 >= 25*xabs
25*xabs = 56064
B
w3303
11214 >= 5*xabs
5*xabs = 11214
A
w3304
56076 >= 25*xabs
25*xabs = 56076
B
w3305
56082 >= 25*xabs
25*xabs = 56082
A
w3306
56089 >= 25*xabs
25*xabs = 56089
B

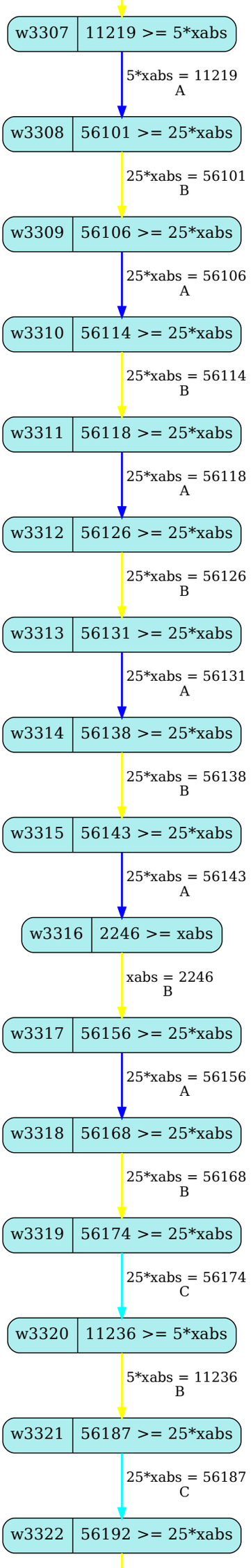
w3307
11219 >= 5*xabs
5*xabs = 11219
A
w3308
56101 >= 25*xabs
25*xabs = 56101
B
w3309
56106 >= 25*xabs
25*xabs = 56106
A
w3310
56114 >= 25*xabs
25*xabs = 56114
B
w3311
56118 >= 25*xabs
25*xabs = 56118
A
w3312
56126 >= 25*xabs
25*xabs = 56126
B
w3313
56131 >= 25*xabs
25*xabs = 56131
A
w3314
56138 >= 25*xabs
25*xabs = 56138
B
w3315
56143 >= 25*xabs
25*xabs = 56143
A
w3316
2246 >= xabs
xabs = 2246
B
w3317
56156 >= 25*xabs
25*xabs = 56156
A
w3318
56168 >= 25*xabs
25*xabs = 56168
B
w3319
56174 >= 25*xabs
25*xabs = 56174
C
w3320
11236 >= 5*xabs
5*xabs = 11236
B
w3321
56187 >= 25*xabs
25*xabs = 56187
C
w3322
56192 >= 25*xabs

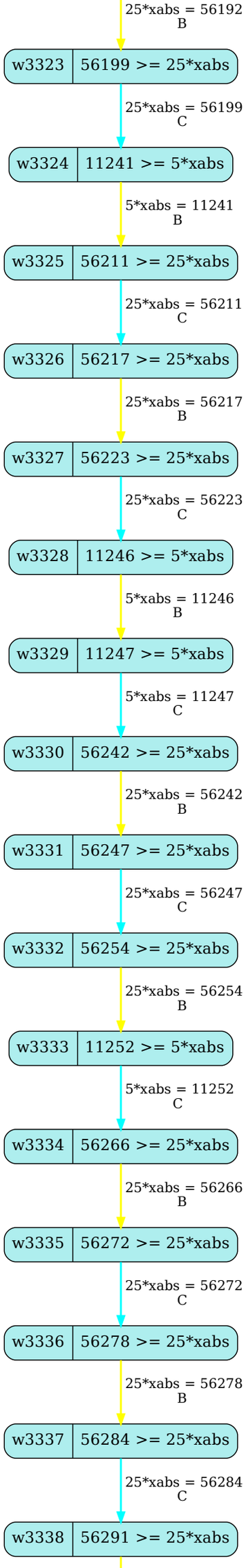
25*xabs = 56192
B
w3323
56199 >= 25*xabs
25*xabs = 56199
C
w3324
11241 >= 5*xabs
5*xabs = 11241
B
w3325
56211 >= 25*xabs
25*xabs = 56211
C
w3326
56217 >= 25*xabs
25*xabs = 56217
B
w3327
56223 >= 25*xabs
25*xabs = 56223
C
w3328
11246 >= 5*xabs
5*xabs = 11246
B
w3329
11247 >= 5*xabs
5*xabs = 11247
C
w3330
56242 >= 25*xabs
25*xabs = 56242
B
w3331
56247 >= 25*xabs
25*xabs = 56247
C
w3332
56254 >= 25*xabs
25*xabs = 56254
B
w3333
11252 >= 5*xabs
5*xabs = 11252
C
w3334
56266 >= 25*xabs
25*xabs = 56266
B
w3335
56272 >= 25*xabs
25*xabs = 56272
C
w3336
56278 >= 25*xabs
25*xabs = 56278
B
w3337
56284 >= 25*xabs
25*xabs = 56284
C
w3338
56291 >= 25*xabs

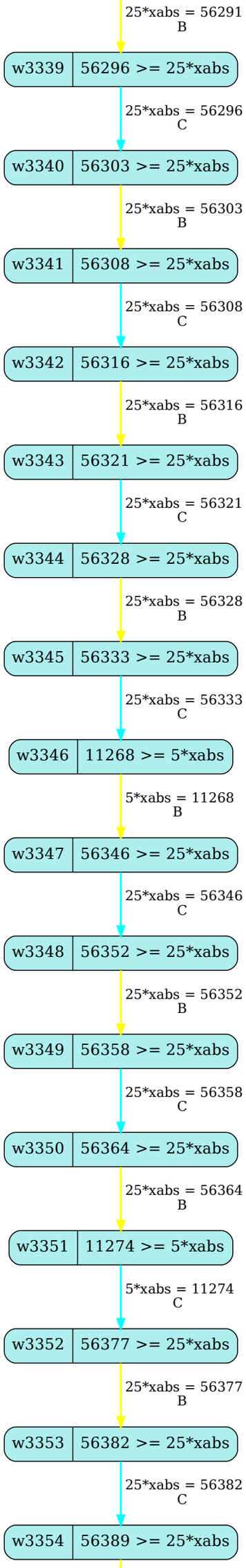
25*xabs = 56291
B
w3339
56296 >= 25*xabs
25*xabs = 56296
C
w3340
56303 >= 25*xabs
25*xabs = 56303
B
w3341
56308 >= 25*xabs
25*xabs = 56308
C
w3342
56316 >= 25*xabs
25*xabs = 56316
B
w3343
56321 >= 25*xabs
25*xabs = 56321
C
w3344
56328 >= 25*xabs
25*xabs = 56328
B
w3345
56333 >= 25*xabs
25*xabs = 56333
C
w3346
11268 >= 5*xabs
5*xabs = 11268
B
w3347
56346 >= 25*xabs
25*xabs = 56346
C
w3348
56352 >= 25*xabs
25*xabs = 56352
B
w3349
56358 >= 25*xabs
25*xabs = 56358
C
w3350
56364 >= 25*xabs
25*xabs = 56364
B
w3351
11274 >= 5*xabs
5*xabs = 11274
C
w3352
56377 >= 25*xabs
25*xabs = 56377
B
w3353
56382 >= 25*xabs
25*xabs = 56382
C
w3354
56389 >= 25*xabs

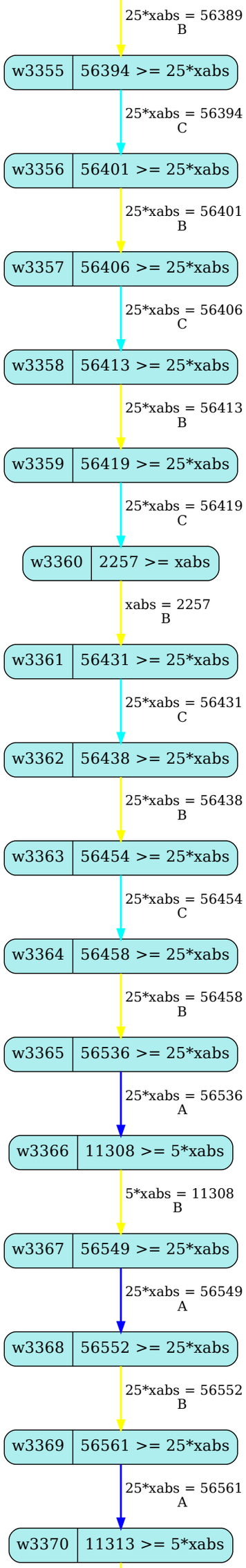
25*xabs = 56389
B
w3355
56394 >= 25*xabs
25*xabs = 56394
C
w3356
56401 >= 25*xabs
25*xabs = 56401
B
w3357
56406 >= 25*xabs
25*xabs = 56406
C
w3358
56413 >= 25*xabs
25*xabs = 56413
B
w3359
56419 >= 25*xabs
25*xabs = 56419
C
w3360
2257 >= xabs
xabs = 2257
B
w3361
56431 >= 25*xabs
25*xabs = 56431
C
w3362
56438 >= 25*xabs
25*xabs = 56438
B
w3363
56454 >= 25*xabs
25*xabs = 56454
C
w3364
56458 >= 25*xabs
25*xabs = 56458
B
w3365
56536 >= 25*xabs
25*xabs = 56536
A
w3366
11308 >= 5*xabs
5*xabs = 11308
B
w3367
56549 >= 25*xabs
25*xabs = 56549
A
w3368
56552 >= 25*xabs
25*xabs = 56552
B
w3369
56561 >= 25*xabs
25*xabs = 56561
A
w3370
11313 >= 5*xabs

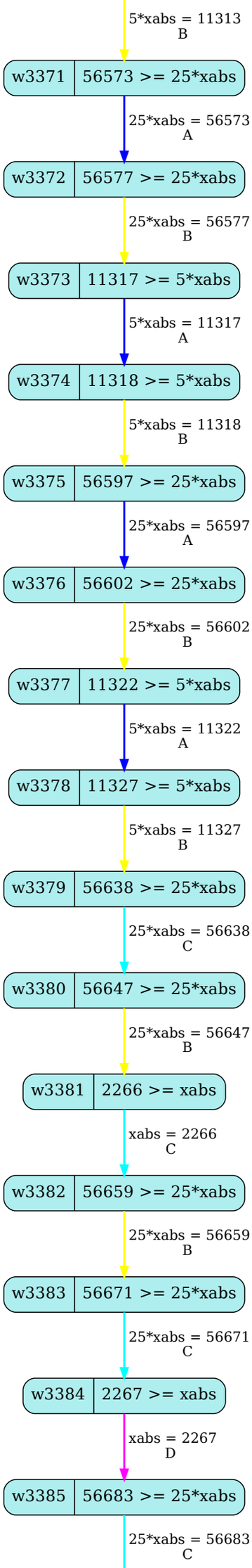
5*xabs = 11313
B
w3371
56573 >= 25*xabs
25*xabs = 56573
A
w3372
56577 >= 25*xabs
25*xabs = 56577
B
w3373
11317 >= 5*xabs
5*xabs = 11317
A
w3374
11318 >= 5*xabs
5*xabs = 11318
B
w3375
56597 >= 25*xabs
25*xabs = 56597
A
w3376
56602 >= 25*xabs
25*xabs = 56602
B
w3377
11322 >= 5*xabs
5*xabs = 11322
A
w3378
11327 >= 5*xabs
5*xabs = 11327
B
w3379
56638 >= 25*xabs
25*xabs = 56638
C
w3380
56647 >= 25*xabs
25*xabs = 56647
B
w3381
2266 >= xabs
xabs = 2266
C
w3382
56659 >= 25*xabs
25*xabs = 56659
B
w3383
56671 >= 25*xabs
25*xabs = 56671
C
w3384
2267 >= xabs
xabs = 2267
D
w3385
56683 >= 25*xabs
25*xabs = 56683
C

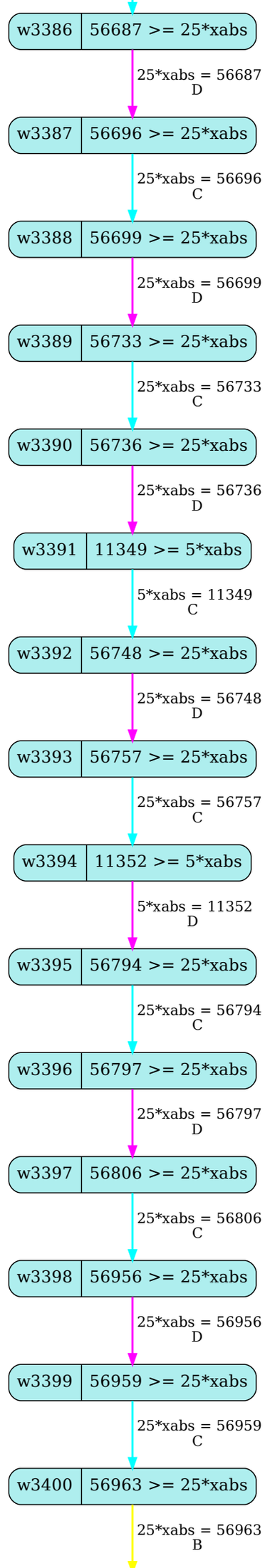
w3386
56687 >= 25*xabs
25*xabs = 56687
D
w3387
56696 >= 25*xabs
25*xabs = 56696
C
w3388
56699 >= 25*xabs
25*xabs = 56699
D
w3389
56733 >= 25*xabs
25*xabs = 56733
C
w3390
56736 >= 25*xabs
25*xabs = 56736
D
w3391
11349 >= 5*xabs
5*xabs = 11349
C
w3392
56748 >= 25*xabs
25*xabs = 56748
D
w3393
56757 >= 25*xabs
25*xabs = 56757
C
w3394
11352 >= 5*xabs
5*xabs = 11352
D
w3395
56794 >= 25*xabs
25*xabs = 56794
C
w3396
56797 >= 25*xabs
25*xabs = 56797
D
w3397
56806 >= 25*xabs
25*xabs = 56806
C
w3398
56956 >= 25*xabs
25*xabs = 56956
D
w3399
56959 >= 25*xabs
25*xabs = 56959
C
w3400
56963 >= 25*xabs
25*xabs = 56963
B

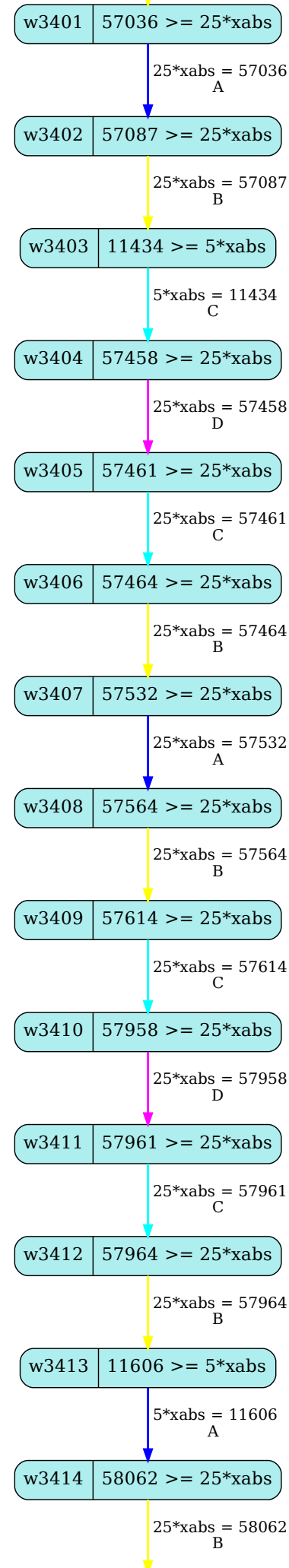
w3401
57036 >= 25*xabs
25*xabs = 57036
A
w3402
57087 >= 25*xabs
25*xabs = 57087
B
w3403
11434 >= 5*xabs
5*xabs = 11434
C
w3404
57458 >= 25*xabs
25*xabs = 57458
D
w3405
57461 >= 25*xabs
25*xabs = 57461
C
w3406
57464 >= 25*xabs
25*xabs = 57464
B
w3407
57532 >= 25*xabs
25*xabs = 57532
A
w3408
57564 >= 25*xabs
25*xabs = 57564
B
w3409
57614 >= 25*xabs
25*xabs = 57614
C
w3410
57958 >= 25*xabs
25*xabs = 57958
D
w3411
57961 >= 25*xabs
25*xabs = 57961
C
w3412
57964 >= 25*xabs
25*xabs = 57964
B
w3413
11606 >= 5*xabs
5*xabs = 11606
A
w3414
58062 >= 25*xabs
25*xabs = 58062
B

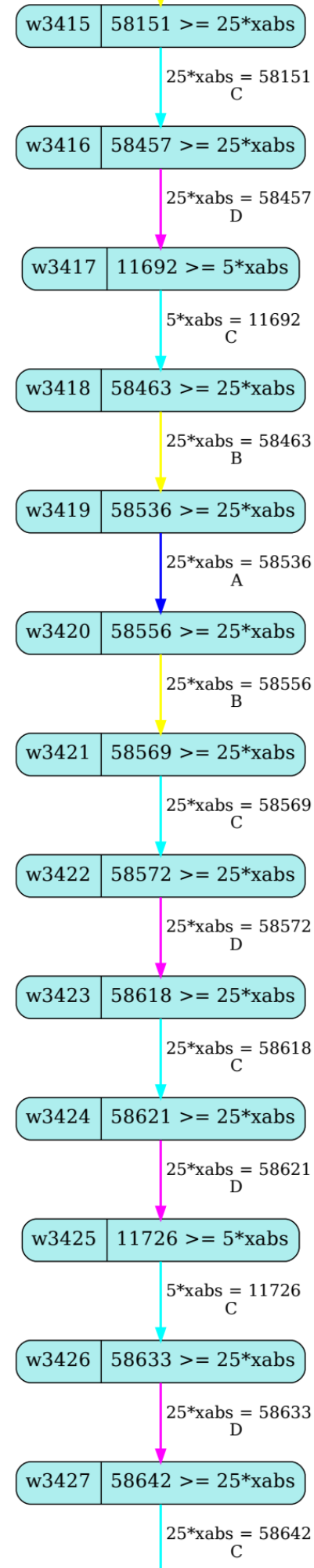
w3415
58151 >= 25*xabs
25*xabs = 58151
C
w3416
58457 >= 25*xabs
25*xabs = 58457
D
w3417
11692 >= 5*xabs
5*xabs = 11692
C
w3418
58463 >= 25*xabs
25*xabs = 58463
B
w3419
58536 >= 25*xabs
25*xabs = 58536
A
w3420
58556 >= 25*xabs
25*xabs = 58556
B
w3421
58569 >= 25*xabs
25*xabs = 58569
C
w3422
58572 >= 25*xabs
25*xabs = 58572
D
w3423
58618 >= 25*xabs
25*xabs = 58618
C
w3424
58621 >= 25*xabs
25*xabs = 58621
D
w3425
11726 >= 5*xabs
5*xabs = 11726
C
w3426
58633 >= 25*xabs
25*xabs = 58633
D
w3427
58642 >= 25*xabs
25*xabs = 58642
C

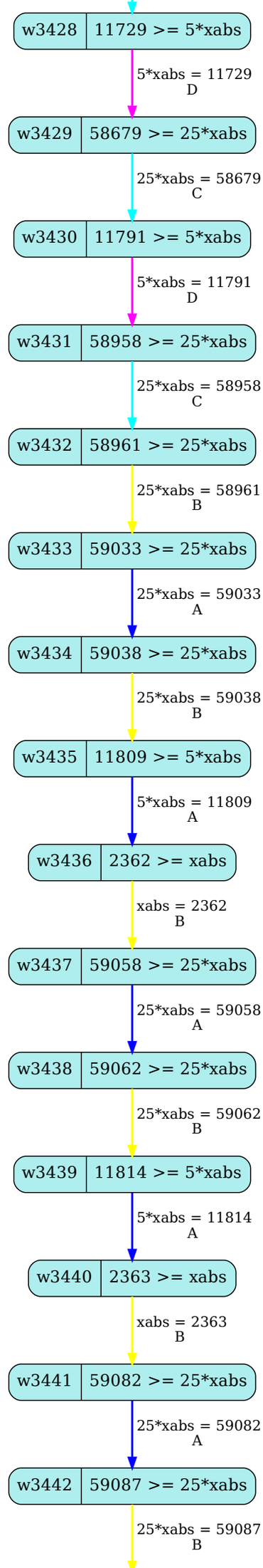
w3428
11729 >= 5*xabs
5*xabs = 11729
D
w3429
58679 >= 25*xabs
25*xabs = 58679
C
w3430
11791 >= 5*xabs
5*xabs = 11791
D
w3431
58958 >= 25*xabs
25*xabs = 58958
C
w3432
58961 >= 25*xabs
25*xabs = 58961
B
w3433
59033 >= 25*xabs
25*xabs = 59033
A
w3434
59038 >= 25*xabs
25*xabs = 59038
B
w3435
11809 >= 5*xabs
5*xabs = 11809
A
w3436
2362 >= xabs
xabs = 2362
B
w3437
59058 >= 25*xabs
25*xabs = 59058
A
w3438
59062 >= 25*xabs
25*xabs = 59062
B
w3439
11814 >= 5*xabs
5*xabs = 11814
A
w3440
2363 >= xabs
xabs = 2363
B
w3441
59082 >= 25*xabs
25*xabs = 59082
A
w3442
59087 >= 25*xabs
25*xabs = 59087
B

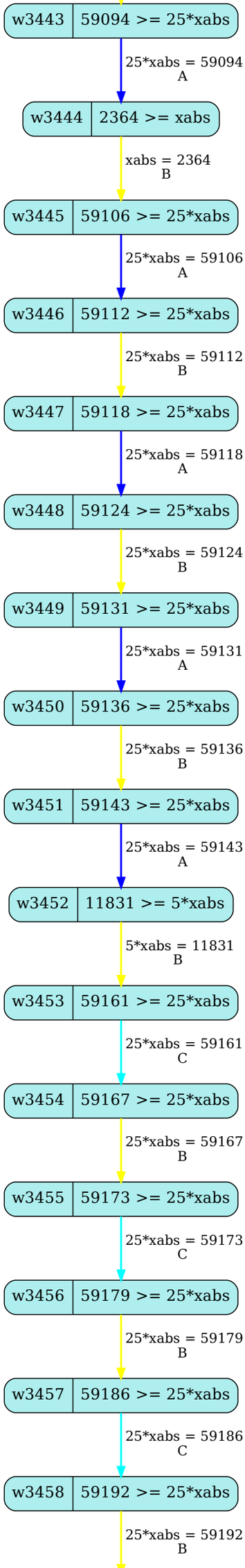
w3443
59094 >= 25*xabs
25*xabs = 59094
A
w3444
2364 >= xabs
xabs = 2364
B
w3445
59106 >= 25*xabs
25*xabs = 59106
A
w3446
59112 >= 25*xabs
25*xabs = 59112
B
w3447
59118 >= 25*xabs
25*xabs = 59118
A
w3448
59124 >= 25*xabs
25*xabs = 59124
B
w3449
59131 >= 25*xabs
25*xabs = 59131
A
w3450
59136 >= 25*xabs
25*xabs = 59136
B
w3451
59143 >= 25*xabs
25*xabs = 59143
A
w3452
11831 >= 5*xabs
5*xabs = 11831
B
w3453
59161 >= 25*xabs
25*xabs = 59161
C
w3454
59167 >= 25*xabs
25*xabs = 59167
B
w3455
59173 >= 25*xabs
25*xabs = 59173
C
w3456
59179 >= 25*xabs
25*xabs = 59179
B
w3457
59186 >= 25*xabs
25*xabs = 59186
C
w3458
59192 >= 25*xabs
25*xabs = 59192
B

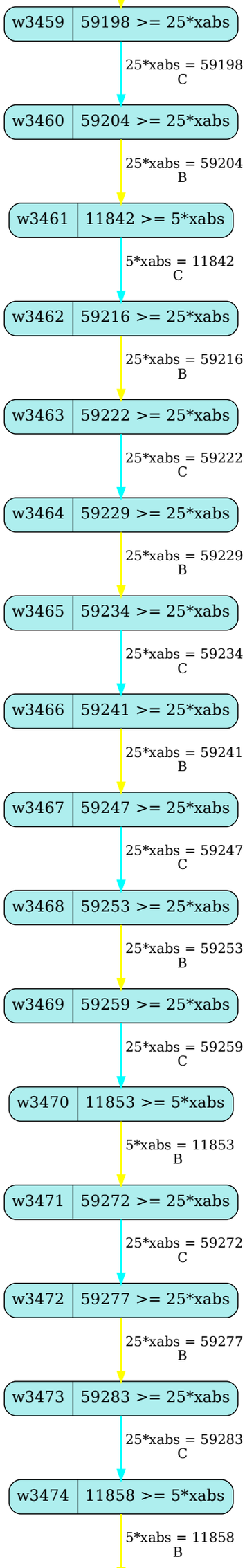
w3459
59198 >= 25*xabs
25*xabs = 59198
C
w3460
59204 >= 25*xabs
25*xabs = 59204
B
w3461
11842 >= 5*xabs
5*xabs = 11842
C
w3462
59216 >= 25*xabs
25*xabs = 59216
B
w3463
59222 >= 25*xabs
25*xabs = 59222
C
w3464
59229 >= 25*xabs
25*xabs = 59229
B
w3465
59234 >= 25*xabs
25*xabs = 59234
C
w3466
59241 >= 25*xabs
25*xabs = 59241
B
w3467
59247 >= 25*xabs
25*xabs = 59247
C
w3468
59253 >= 25*xabs
25*xabs = 59253
B
w3469
59259 >= 25*xabs
25*xabs = 59259
C
w3470
11853 >= 5*xabs
5*xabs = 11853
B
w3471
59272 >= 25*xabs
25*xabs = 59272
C
w3472
59277 >= 25*xabs
25*xabs = 59277
B
w3473
59283 >= 25*xabs
25*xabs = 59283
C
w3474
11858 >= 5*xabs
5*xabs = 11858
B

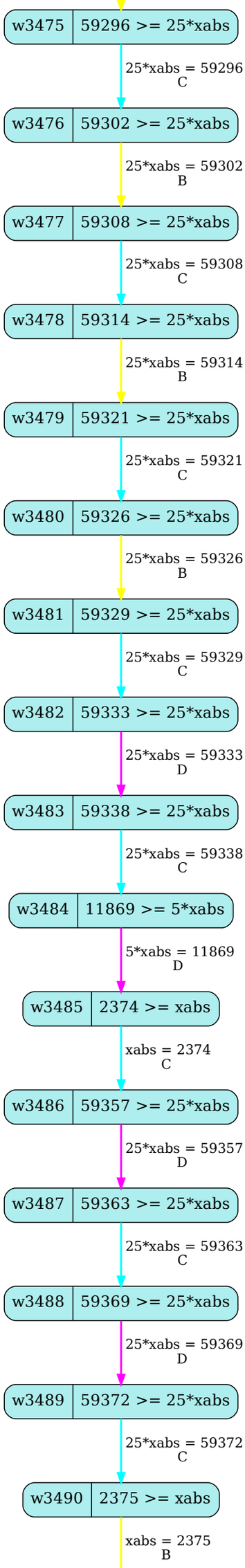
w3475
59296 >= 25*xabs
25*xabs = 59296
C
w3476
59302 >= 25*xabs
25*xabs = 59302
B
w3477
59308 >= 25*xabs
25*xabs = 59308
C
w3478
59314 >= 25*xabs
25*xabs = 59314
B
w3479
59321 >= 25*xabs
25*xabs = 59321
C
w3480
59326 >= 25*xabs
25*xabs = 59326
B
w3481
59329 >= 25*xabs
25*xabs = 59329
C
w3482
59333 >= 25*xabs
25*xabs = 59333
D
w3483
59338 >= 25*xabs
25*xabs = 59338
C
w3484
11869 >= 5*xabs
5*xabs = 11869
D
w3485
2374 >= xabs
xabs = 2374
C
w3486
59357 >= 25*xabs
25*xabs = 59357
D
w3487
59363 >= 25*xabs
25*xabs = 59363
C
w3488
59369 >= 25*xabs
25*xabs = 59369
D
w3489
59372 >= 25*xabs
25*xabs = 59372
C
w3490
2375 >= xabs
xabs = 2375
B

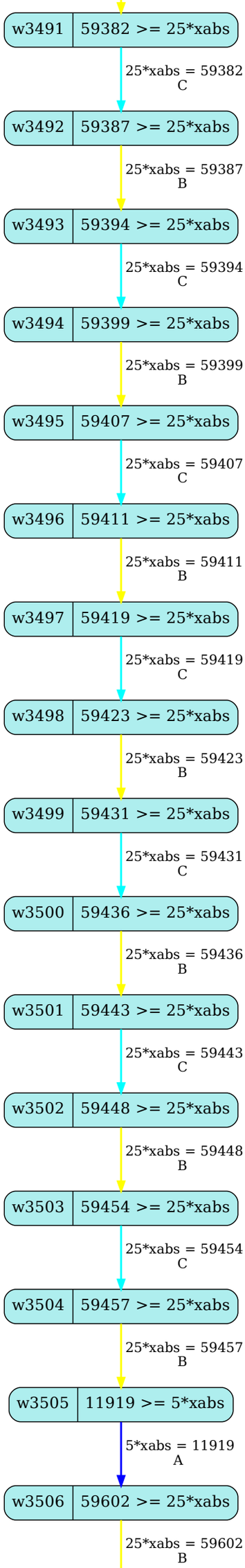
w3491
59382 >= 25*xabs
25*xabs = 59382
C
w3492
59387 >= 25*xabs
25*xabs = 59387
B
w3493
59394 >= 25*xabs
25*xabs = 59394
C
w3494
59399 >= 25*xabs
25*xabs = 59399
B
w3495
59407 >= 25*xabs
25*xabs = 59407
C
w3496
59411 >= 25*xabs
25*xabs = 59411
B
w3497
59419 >= 25*xabs
25*xabs = 59419
C
w3498
59423 >= 25*xabs
25*xabs = 59423
B
w3499
59431 >= 25*xabs
25*xabs = 59431
C
w3500
59436 >= 25*xabs
25*xabs = 59436
B
w3501
59443 >= 25*xabs
25*xabs = 59443
C
w3502
59448 >= 25*xabs
25*xabs = 59448
B
w3503
59454 >= 25*xabs
25*xabs = 59454
C
w3504
59457 >= 25*xabs
25*xabs = 59457
B
w3505
11919 >= 5*xabs
5*xabs = 11919
A
w3506
59602 >= 25*xabs
25*xabs = 59602
B

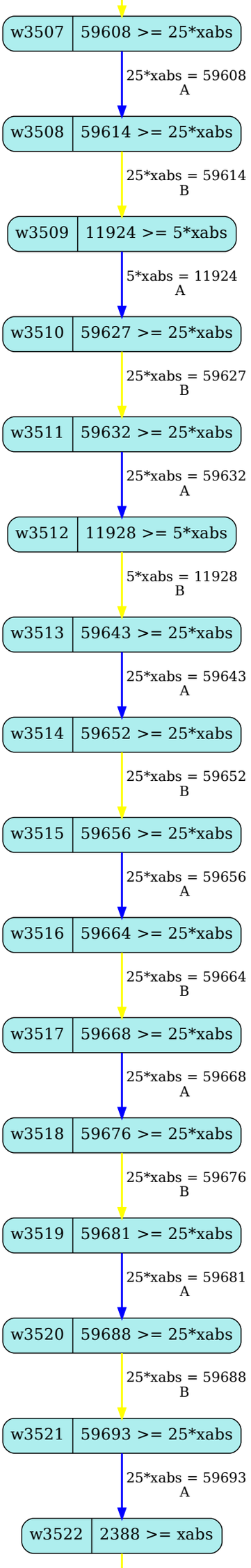
w3507
59608 >= 25*xabs
25*xabs = 59608
A
w3508
59614 >= 25*xabs
25*xabs = 59614
B
w3509
11924 >= 5*xabs
5*xabs = 11924
A
w3510
59627 >= 25*xabs
25*xabs = 59627
B
w3511
59632 >= 25*xabs
25*xabs = 59632
A
w3512
11928 >= 5*xabs
5*xabs = 11928
B
w3513
59643 >= 25*xabs
25*xabs = 59643
A
w3514
59652 >= 25*xabs
25*xabs = 59652
B
w3515
59656 >= 25*xabs
25*xabs = 59656
A
w3516
59664 >= 25*xabs
25*xabs = 59664
B
w3517
59668 >= 25*xabs
25*xabs = 59668
A
w3518
59676 >= 25*xabs
25*xabs = 59676
B
w3519
59681 >= 25*xabs
25*xabs = 59681
A
w3520
59688 >= 25*xabs
25*xabs = 59688
B
w3521
59693 >= 25*xabs
25*xabs = 59693
A
w3522
2388 >= xabs

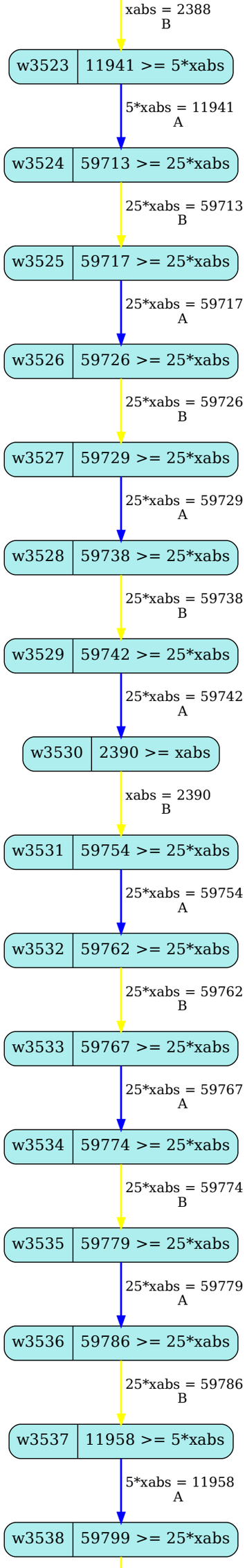
xabs = 2388
B
w3523
11941 >= 5*xabs
5*xabs = 11941
A
w3524
59713 >= 25*xabs
25*xabs = 59713
B
w3525
59717 >= 25*xabs
25*xabs = 59717
A
w3526
59726 >= 25*xabs
25*xabs = 59726
B
w3527
59729 >= 25*xabs
25*xabs = 59729
A
w3528
59738 >= 25*xabs
25*xabs = 59738
B
w3529
59742 >= 25*xabs
25*xabs = 59742
A
w3530
2390 >= xabs
xabs = 2390
B
w3531
59754 >= 25*xabs
25*xabs = 59754
A
w3532
59762 >= 25*xabs
25*xabs = 59762
B
w3533
59767 >= 25*xabs
25*xabs = 59767
A
w3534
59774 >= 25*xabs
25*xabs = 59774
B
w3535
59779 >= 25*xabs
25*xabs = 59779
A
w3536
59786 >= 25*xabs
25*xabs = 59786
B
w3537
11958 >= 5*xabs
5*xabs = 11958
A
w3538
59799 >= 25*xabs

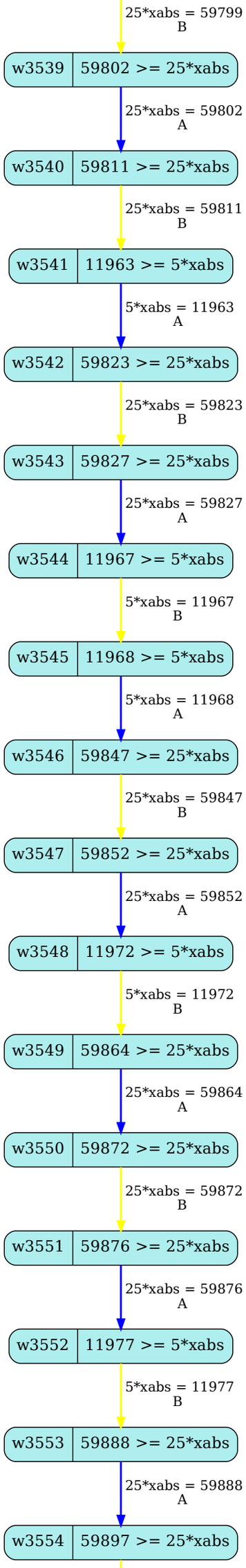
25*xabs = 59799
B
w3539
59802 >= 25*xabs
25*xabs = 59802
A
w3540
59811 >= 25*xabs
25*xabs = 59811
B
w3541
11963 >= 5*xabs
5*xabs = 11963
A
w3542
59823 >= 25*xabs
25*xabs = 59823
B
w3543
59827 >= 25*xabs
25*xabs = 59827
A
w3544
11967 >= 5*xabs
5*xabs = 11967
B
w3545
11968 >= 5*xabs
5*xabs = 11968
A
w3546
59847 >= 25*xabs
25*xabs = 59847
B
w3547
59852 >= 25*xabs
25*xabs = 59852
A
w3548
11972 >= 5*xabs
5*xabs = 11972
B
w3549
59864 >= 25*xabs
25*xabs = 59864
A
w3550
59872 >= 25*xabs
25*xabs = 59872
B
w3551
59876 >= 25*xabs
25*xabs = 59876
A
w3552
11977 >= 5*xabs
5*xabs = 11977
B
w3553
59888 >= 25*xabs
25*xabs = 59888
A
w3554
59897 >= 25*xabs

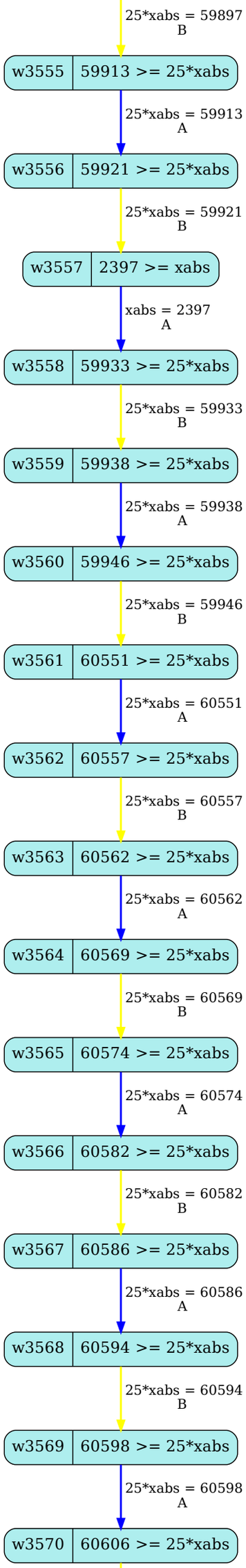
25*xabs = 59897
B
w3555
59913 >= 25*xabs
25*xabs = 59913
A
w3556
59921 >= 25*xabs
25*xabs = 59921
B
w3557
2397 >= xabs
xabs = 2397
A
w3558
59933 >= 25*xabs
25*xabs = 59933
B
w3559
59938 >= 25*xabs
25*xabs = 59938
A
w3560
59946 >= 25*xabs
25*xabs = 59946
B
w3561
60551 >= 25*xabs
25*xabs = 60551
A
w3562
60557 >= 25*xabs
25*xabs = 60557
B
w3563
60562 >= 25*xabs
25*xabs = 60562
A
w3564
60569 >= 25*xabs
25*xabs = 60569
B
w3565
60574 >= 25*xabs
25*xabs = 60574
A
w3566
60582 >= 25*xabs
25*xabs = 60582
B
w3567
60586 >= 25*xabs
25*xabs = 60586
A
w3568
60594 >= 25*xabs
25*xabs = 60594
B
w3569
60598 >= 25*xabs
25*xabs = 60598
A
w3570
60606 >= 25*xabs

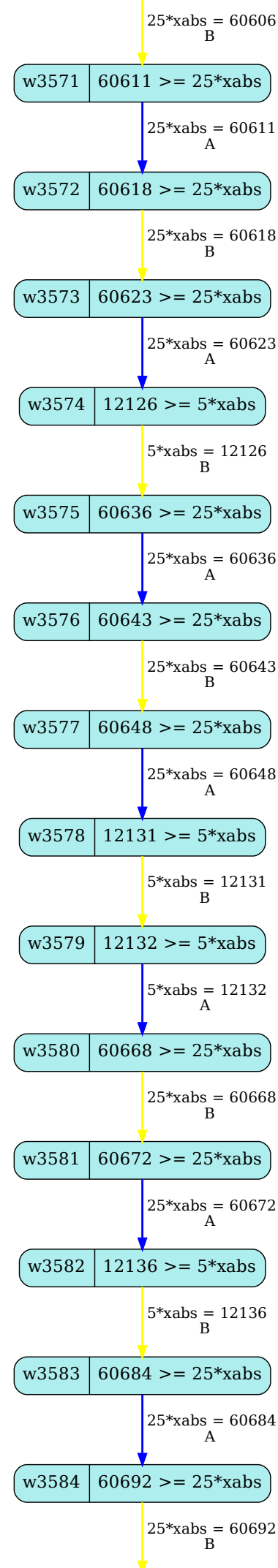
25*xabs = 60606
B
w3571
60611 >= 25*xabs
25*xabs = 60611
A
w3572
60618 >= 25*xabs
25*xabs = 60618
B
w3573
60623 >= 25*xabs
25*xabs = 60623
A
w3574
12126 >= 5*xabs
5*xabs = 12126
B
w3575
60636 >= 25*xabs
25*xabs = 60636
A
w3576
60643 >= 25*xabs
25*xabs = 60643
B
w3577
60648 >= 25*xabs
25*xabs = 60648
A
w3578
12131 >= 5*xabs
5*xabs = 12131
B
w3579
12132 >= 5*xabs
5*xabs = 12132
A
w3580
60668 >= 25*xabs
25*xabs = 60668
B
w3581
60672 >= 25*xabs
25*xabs = 60672
A
w3582
12136 >= 5*xabs
5*xabs = 12136
B
w3583
60684 >= 25*xabs
25*xabs = 60684
A
w3584
60692 >= 25*xabs
25*xabs = 60692
B

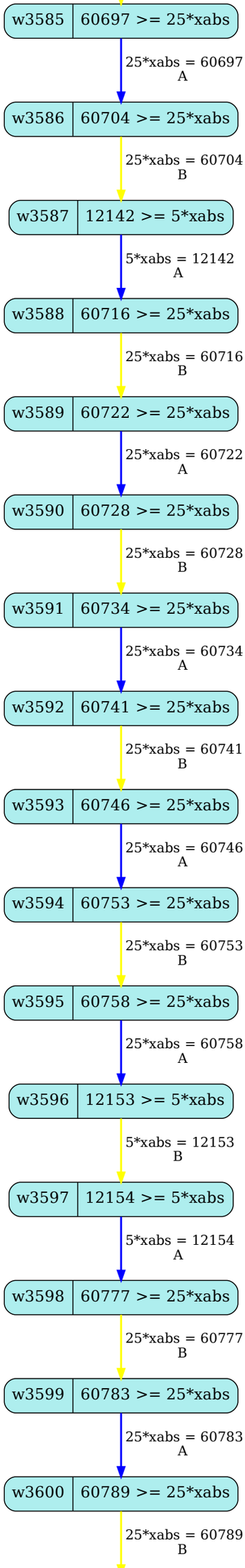
w3585
60697 >= 25*xabs
25*xabs = 60697
A
w3586
60704 >= 25*xabs
25*xabs = 60704
B
w3587
12142 >= 5*xabs
5*xabs = 12142
A
w3588
60716 >= 25*xabs
25*xabs = 60716
B
w3589
60722 >= 25*xabs
25*xabs = 60722
A
w3590
60728 >= 25*xabs
25*xabs = 60728
B
w3591
60734 >= 25*xabs
25*xabs = 60734
A
w3592
60741 >= 25*xabs
25*xabs = 60741
B
w3593
60746 >= 25*xabs
25*xabs = 60746
A
w3594
60753 >= 25*xabs
25*xabs = 60753
B
w3595
60758 >= 25*xabs
25*xabs = 60758
A
w3596
12153 >= 5*xabs
5*xabs = 12153
B
w3597
12154 >= 5*xabs
5*xabs = 12154
A
w3598
60777 >= 25*xabs
25*xabs = 60777
B
w3599
60783 >= 25*xabs
25*xabs = 60783
A
w3600
60789 >= 25*xabs
25*xabs = 60789
B

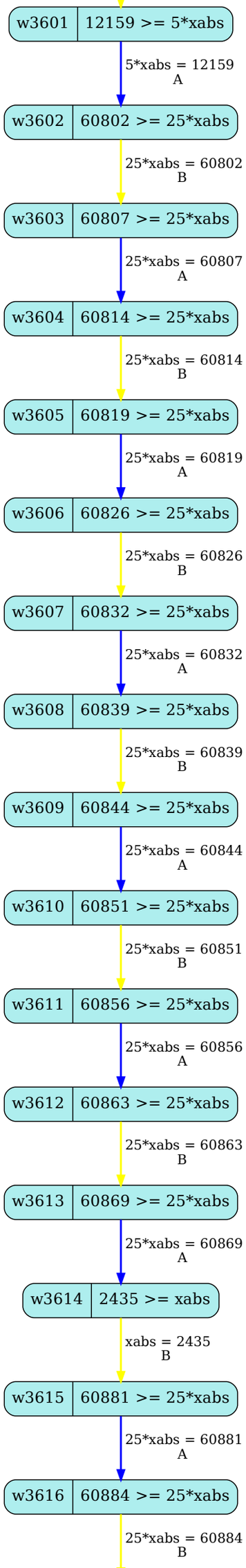
w3601
12159 >= 5*xabs
5*xabs = 12159
A
w3602
60802 >= 25*xabs
25*xabs = 60802
B
w3603
60807 >= 25*xabs
25*xabs = 60807
A
w3604
60814 >= 25*xabs
25*xabs = 60814
B
w3605
60819 >= 25*xabs
25*xabs = 60819
A
w3606
60826 >= 25*xabs
25*xabs = 60826
B
w3607
60832 >= 25*xabs
25*xabs = 60832
A
w3608
60839 >= 25*xabs
25*xabs = 60839
B
w3609
60844 >= 25*xabs
25*xabs = 60844
A
w3610
60851 >= 25*xabs
25*xabs = 60851
B
w3611
60856 >= 25*xabs
25*xabs = 60856
A
w3612
60863 >= 25*xabs
25*xabs = 60863
B
w3613
60869 >= 25*xabs
25*xabs = 60869
A
w3614
2435 >= xabs
xabs = 2435
B
w3615
60881 >= 25*xabs
25*xabs = 60881
A
w3616
60884 >= 25*xabs
25*xabs = 60884
B

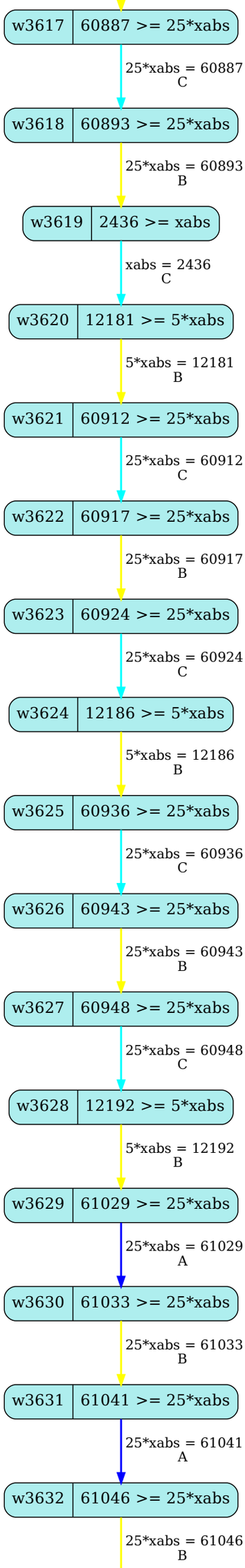
w3617
60887 >= 25*xabs
25*xabs = 60887
C
w3618
60893 >= 25*xabs
25*xabs = 60893
B
w3619
2436 >= xabs
xabs = 2436
C
w3620
12181 >= 5*xabs
5*xabs = 12181
B
w3621
60912 >= 25*xabs
25*xabs = 60912
C
w3622
60917 >= 25*xabs
25*xabs = 60917
B
w3623
60924 >= 25*xabs
25*xabs = 60924
C
w3624
12186 >= 5*xabs
5*xabs = 12186
B
w3625
60936 >= 25*xabs
25*xabs = 60936
C
w3626
60943 >= 25*xabs
25*xabs = 60943
B
w3627
60948 >= 25*xabs
25*xabs = 60948
C
w3628
12192 >= 5*xabs
5*xabs = 12192
B
w3629
61029 >= 25*xabs
25*xabs = 61029
A
w3630
61033 >= 25*xabs
25*xabs = 61033
B
w3631
61041 >= 25*xabs
25*xabs = 61041
A
w3632
61046 >= 25*xabs
25*xabs = 61046
B

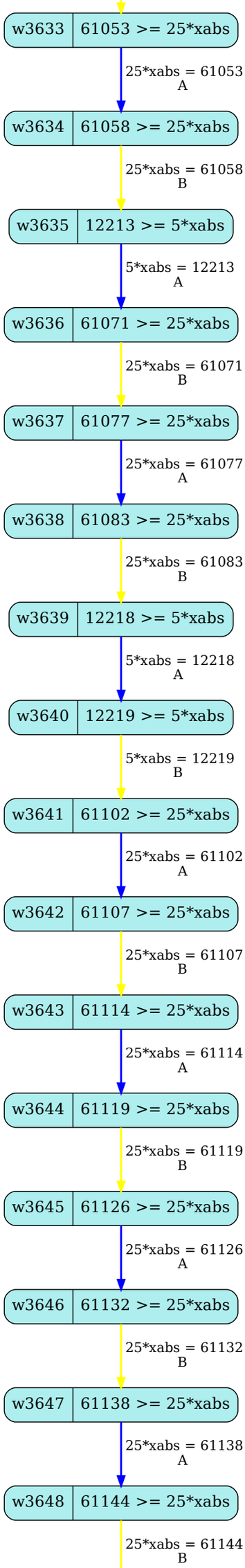
w3633
61053 >= 25*xabs
25*xabs = 61053
A
w3634
61058 >= 25*xabs
25*xabs = 61058
B
w3635
12213 >= 5*xabs
5*xabs = 12213
A
w3636
61071 >= 25*xabs
25*xabs = 61071
B
w3637
61077 >= 25*xabs
25*xabs = 61077
A
w3638
61083 >= 25*xabs
25*xabs = 61083
B
w3639
12218 >= 5*xabs
5*xabs = 12218
A
w3640
12219 >= 5*xabs
5*xabs = 12219
B
w3641
61102 >= 25*xabs
25*xabs = 61102
A
w3642
61107 >= 25*xabs
25*xabs = 61107
B
w3643
61114 >= 25*xabs
25*xabs = 61114
A
w3644
61119 >= 25*xabs
25*xabs = 61119
B
w3645
61126 >= 25*xabs
25*xabs = 61126
A
w3646
61132 >= 25*xabs
25*xabs = 61132
B
w3647
61138 >= 25*xabs
25*xabs = 61138
A
w3648
61144 >= 25*xabs
25*xabs = 61144
B

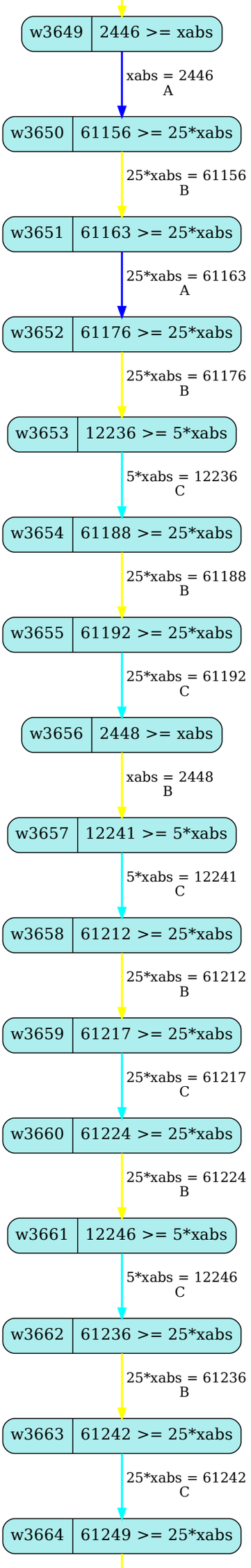
w3649
2446 >= xabs
xabs = 2446
A
w3650
61156 >= 25*xabs
25*xabs = 61156
B
w3651
61163 >= 25*xabs
25*xabs = 61163
A
w3652
61176 >= 25*xabs
25*xabs = 61176
B
w3653
12236 >= 5*xabs
5*xabs = 12236
C
w3654
61188 >= 25*xabs
25*xabs = 61188
B
w3655
61192 >= 25*xabs
25*xabs = 61192
C
w3656
2448 >= xabs
xabs = 2448
B
w3657
12241 >= 5*xabs
5*xabs = 12241
C
w3658
61212 >= 25*xabs
25*xabs = 61212
B
w3659
61217 >= 25*xabs
25*xabs = 61217
C
w3660
61224 >= 25*xabs
25*xabs = 61224
B
w3661
12246 >= 5*xabs
5*xabs = 12246
C
w3662
61236 >= 25*xabs
25*xabs = 61236
B
w3663
61242 >= 25*xabs
25*xabs = 61242
C
w3664
61249 >= 25*xabs

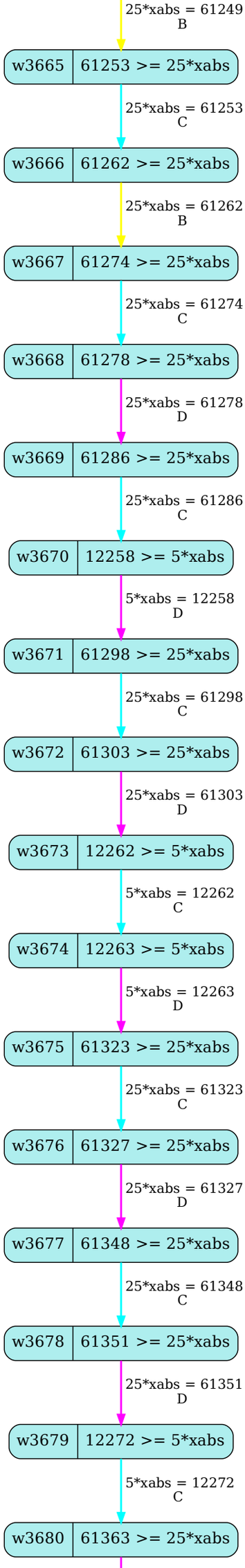
25*xabs = 61249
B
w3665
61253 >= 25*xabs
25*xabs = 61253
C
w3666
61262 >= 25*xabs
25*xabs = 61262
B
w3667
61274 >= 25*xabs
25*xabs = 61274
C
w3668
61278 >= 25*xabs
25*xabs = 61278
D
w3669
61286 >= 25*xabs
25*xabs = 61286
C
w3670
12258 >= 5*xabs
5*xabs = 12258
D
w3671
61298 >= 25*xabs
25*xabs = 61298
C
w3672
61303 >= 25*xabs
25*xabs = 61303
D
w3673
12262 >= 5*xabs
5*xabs = 12262
C
w3674
12263 >= 5*xabs
5*xabs = 12263
D
w3675
61323 >= 25*xabs
25*xabs = 61323
C
w3676
61327 >= 25*xabs
25*xabs = 61327
D
w3677
61348 >= 25*xabs
25*xabs = 61348
C
w3678
61351 >= 25*xabs
25*xabs = 61351
D
w3679
12272 >= 5*xabs
5*xabs = 12272
C
w3680
61363 >= 25*xabs

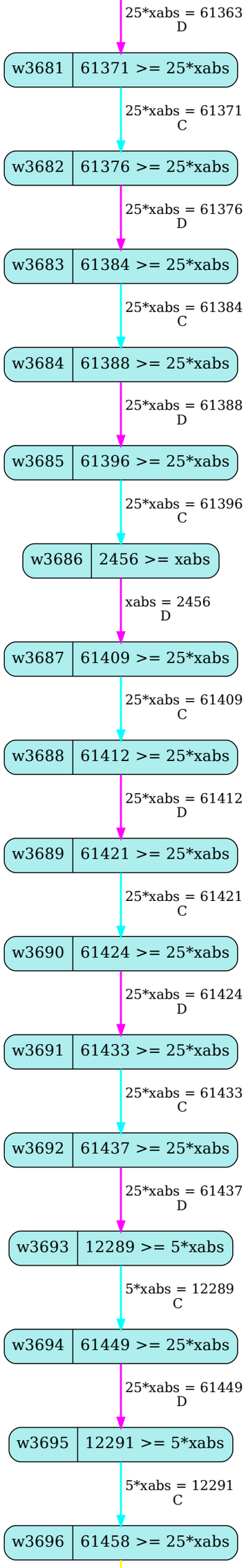
25*xabs = 61363
D
w3681
61371 >= 25*xabs
25*xabs = 61371
C
w3682
61376 >= 25*xabs
25*xabs = 61376
D
w3683
61384 >= 25*xabs
25*xabs = 61384
C
w3684
61388 >= 25*xabs
25*xabs = 61388
D
w3685
61396 >= 25*xabs
25*xabs = 61396
C
w3686
2456 >= xabs
xabs = 2456
D
w3687
61409 >= 25*xabs
25*xabs = 61409
C
w3688
61412 >= 25*xabs
25*xabs = 61412
D
w3689
61421 >= 25*xabs
25*xabs = 61421
C
w3690
61424 >= 25*xabs
25*xabs = 61424
D
w3691
61433 >= 25*xabs
25*xabs = 61433
C
w3692
61437 >= 25*xabs
25*xabs = 61437
D
w3693
12289 >= 5*xabs
5*xabs = 12289
C
w3694
61449 >= 25*xabs
25*xabs = 61449
D
w3695
12291 >= 5*xabs
5*xabs = 12291
C
w3696
61458 >= 25*xabs

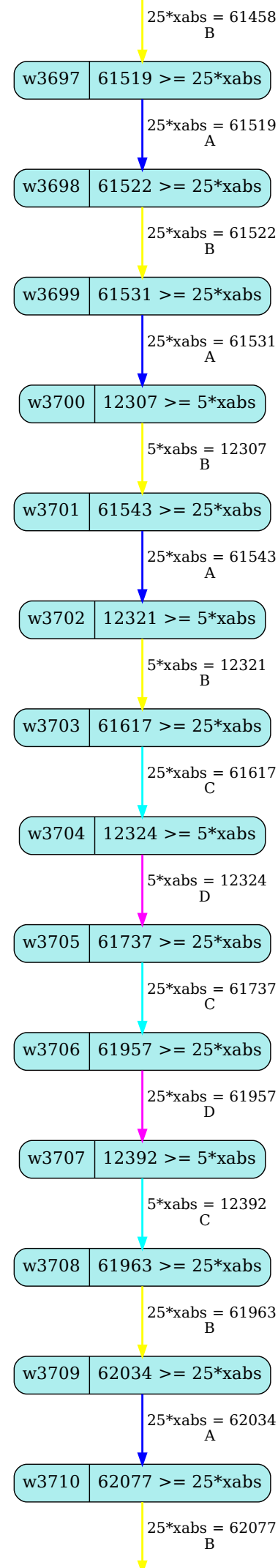
25*xabs = 61458
B
w3697
61519 >= 25*xabs
25*xabs = 61519
A
w3698
61522 >= 25*xabs
25*xabs = 61522
B
w3699
61531 >= 25*xabs
25*xabs = 61531
A
w3700
12307 >= 5*xabs
5*xabs = 12307
B
w3701
61543 >= 25*xabs
25*xabs = 61543
A
w3702
12321 >= 5*xabs
5*xabs = 12321
B
w3703
61617 >= 25*xabs
25*xabs = 61617
C
w3704
12324 >= 5*xabs
5*xabs = 12324
D
w3705
61737 >= 25*xabs
25*xabs = 61737
C
w3706
61957 >= 25*xabs
25*xabs = 61957
D
w3707
12392 >= 5*xabs
5*xabs = 12392
C
w3708
61963 >= 25*xabs
25*xabs = 61963
B
w3709
62034 >= 25*xabs
25*xabs = 62034
A
w3710
62077 >= 25*xabs
25*xabs = 62077
B

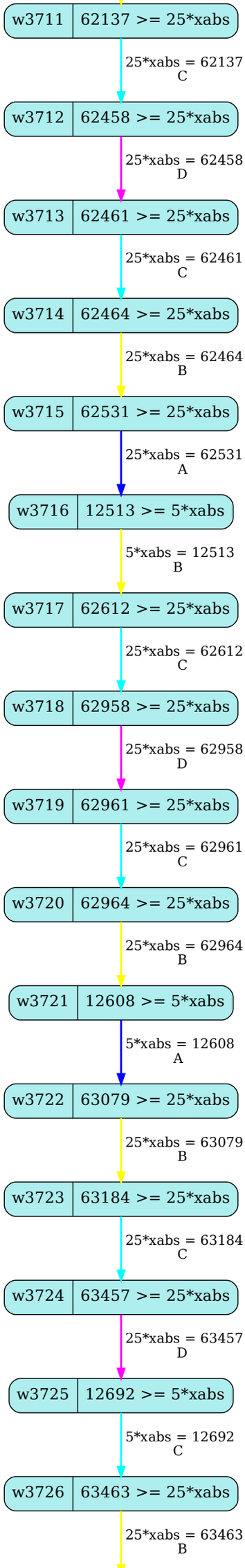
w3711
62137 >= 25*xabs
25*xabs = 62137
C
w3712
62458 >= 25*xabs
25*xabs = 62458
D
w3713
62461 >= 25*xabs
25*xabs = 62461
C
w3714
62464 >= 25*xabs
25*xabs = 62464
B
w3715
62531 >= 25*xabs
25*xabs = 62531
A
w3716
12513 >= 5*xabs
5*xabs = 12513
B
w3717
62612 >= 25*xabs
25*xabs = 62612
C
w3718
62958 >= 25*xabs
25*xabs = 62958
D
w3719
62961 >= 25*xabs
25*xabs = 62961
C
w3720
62964 >= 25*xabs
25*xabs = 62964
B
w3721
12608 >= 5*xabs
5*xabs = 12608
A
w3722
63079 >= 25*xabs
25*xabs = 63079
B
w3723
63184 >= 25*xabs
25*xabs = 63184
C
w3724
63457 >= 25*xabs
25*xabs = 63457
D
w3725
12692 >= 5*xabs
5*xabs = 12692
C
w3726
63463 >= 25*xabs
25*xabs = 63463
B

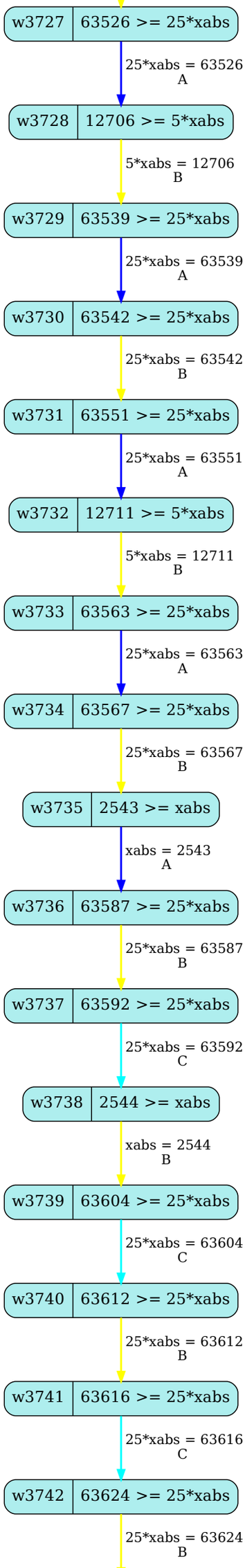
w3727
63526 >= 25*xabs
25*xabs = 63526
A
w3728
12706 >= 5*xabs
5*xabs = 12706
B
w3729
63539 >= 25*xabs
25*xabs = 63539
A
w3730
63542 >= 25*xabs
25*xabs = 63542
B
w3731
63551 >= 25*xabs
25*xabs = 63551
A
w3732
12711 >= 5*xabs
5*xabs = 12711
B
w3733
63563 >= 25*xabs
25*xabs = 63563
A
w3734
63567 >= 25*xabs
25*xabs = 63567
B
w3735
2543 >= xabs
xabs = 2543
A
w3736
63587 >= 25*xabs
25*xabs = 63587
B
w3737
63592 >= 25*xabs
25*xabs = 63592
C
w3738
2544 >= xabs
xabs = 2544
B
w3739
63604 >= 25*xabs
25*xabs = 63604
C
w3740
63612 >= 25*xabs
25*xabs = 63612
B
w3741
63616 >= 25*xabs
25*xabs = 63616
C
w3742
63624 >= 25*xabs
25*xabs = 63624
B

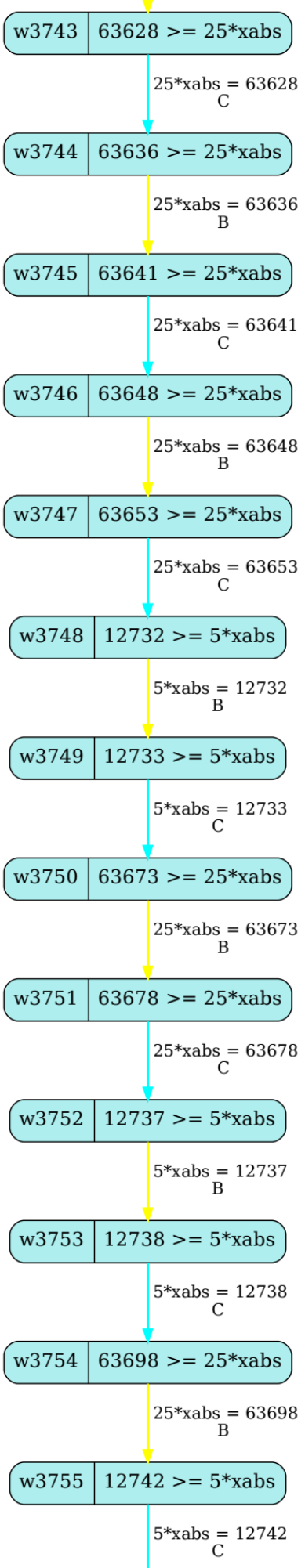
w3743
63628 >= 25*xabs
25*xabs = 63628
C
w3744
63636 >= 25*xabs
25*xabs = 63636
B
w3745
63641 >= 25*xabs
25*xabs = 63641
C
w3746
63648 >= 25*xabs
25*xabs = 63648
B
w3747
63653 >= 25*xabs
25*xabs = 63653
C
w3748
12732 >= 5*xabs
5*xabs = 12732
B
w3749
12733 >= 5*xabs
5*xabs = 12733
C
w3750
63673 >= 25*xabs
25*xabs = 63673
B
w3751
63678 >= 25*xabs
25*xabs = 63678
C
w3752
12737 >= 5*xabs
5*xabs = 12737
B
w3753
12738 >= 5*xabs
5*xabs = 12738
C
w3754
63698 >= 25*xabs
25*xabs = 63698
B
w3755
12742 >= 5*xabs
5*xabs = 12742
C

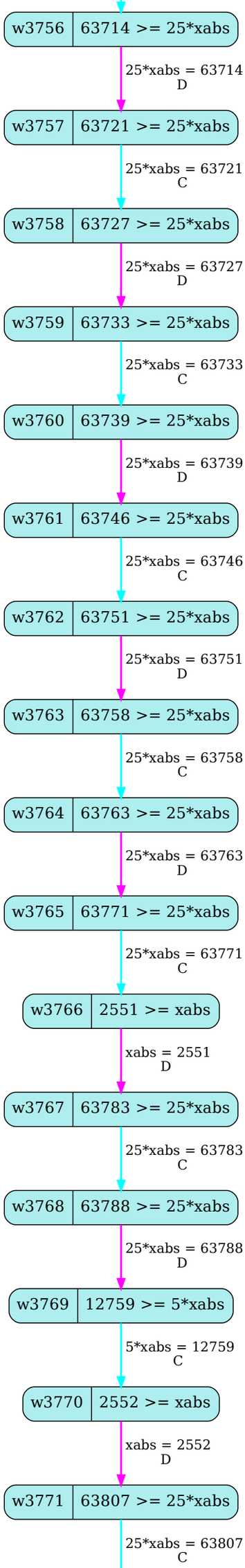
w3756
63714 >= 25*xabs
25*xabs = 63714
D
w3757
63721 >= 25*xabs
25*xabs = 63721
C
w3758
63727 >= 25*xabs
25*xabs = 63727
D
w3759
63733 >= 25*xabs
25*xabs = 63733
C
w3760
63739 >= 25*xabs
25*xabs = 63739
D
w3761
63746 >= 25*xabs
25*xabs = 63746
C
w3762
63751 >= 25*xabs
25*xabs = 63751
D
w3763
63758 >= 25*xabs
25*xabs = 63758
C
w3764
63763 >= 25*xabs
25*xabs = 63763
D
w3765
63771 >= 25*xabs
25*xabs = 63771
C
w3766
2551 >= xabs
xabs = 2551
D
w3767
63783 >= 25*xabs
25*xabs = 63783
C
w3768
63788 >= 25*xabs
25*xabs = 63788
D
w3769
12759 >= 5*xabs
5*xabs = 12759
C
w3770
2552 >= xabs
xabs = 2552
D
w3771
63807 >= 25*xabs
25*xabs = 63807
C

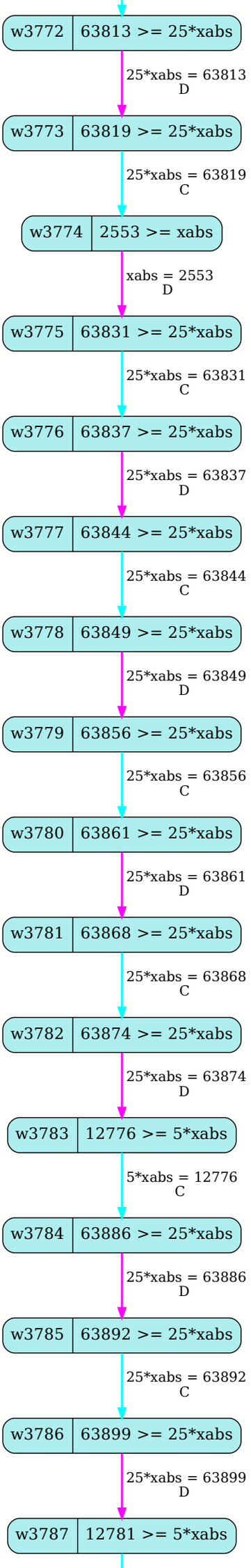
w3772
63813 >= 25*xabs
25*xabs = 63813
D
w3773
63819 >= 25*xabs
25*xabs = 63819
C
w3774
2553 >= xabs
xabs = 2553
D
w3775
63831 >= 25*xabs
25*xabs = 63831
C
w3776
63837 >= 25*xabs
25*xabs = 63837
D
w3777
63844 >= 25*xabs
25*xabs = 63844
C
w3778
63849 >= 25*xabs
25*xabs = 63849
D
w3779
63856 >= 25*xabs
25*xabs = 63856
C
w3780
63861 >= 25*xabs
25*xabs = 63861
D
w3781
63868 >= 25*xabs
25*xabs = 63868
C
w3782
63874 >= 25*xabs
25*xabs = 63874
D
w3783
12776 >= 5*xabs
5*xabs = 12776
C
w3784
63886 >= 25*xabs
25*xabs = 63886
D
w3785
63892 >= 25*xabs
25*xabs = 63892
C
w3786
63899 >= 25*xabs
25*xabs = 63899
D
w3787
12781 >= 5*xabs

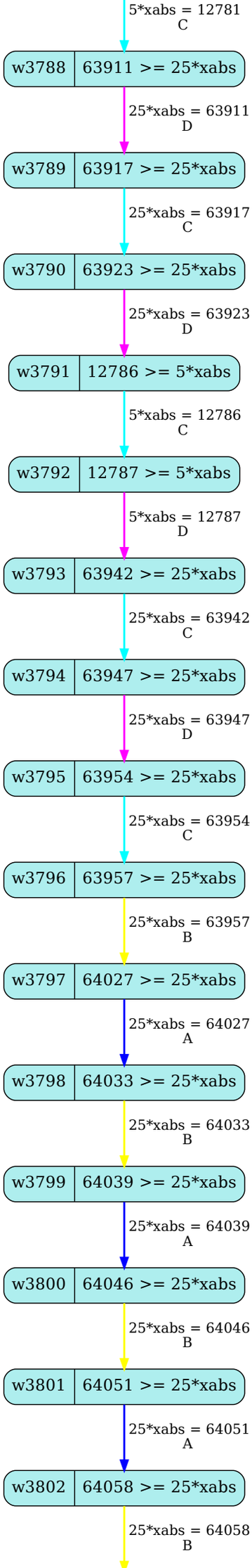
5*xabs = 12781
C
w3788
63911 >= 25*xabs
25*xabs = 63911
D
w3789
63917 >= 25*xabs
25*xabs = 63917
C
w3790
63923 >= 25*xabs
25*xabs = 63923
D
w3791
12786 >= 5*xabs
5*xabs = 12786
C
w3792
12787 >= 5*xabs
5*xabs = 12787
D
w3793
63942 >= 25*xabs
25*xabs = 63942
C
w3794
63947 >= 25*xabs
25*xabs = 63947
D
w3795
63954 >= 25*xabs
25*xabs = 63954
C
w3796
63957 >= 25*xabs
25*xabs = 63957
B
w3797
64027 >= 25*xabs
25*xabs = 64027
A
w3798
64033 >= 25*xabs
25*xabs = 64033
B
w3799
64039 >= 25*xabs
25*xabs = 64039
A
w3800
64046 >= 25*xabs
25*xabs = 64046
B
w3801
64051 >= 25*xabs
25*xabs = 64051
A
w3802
64058 >= 25*xabs
25*xabs = 64058
B

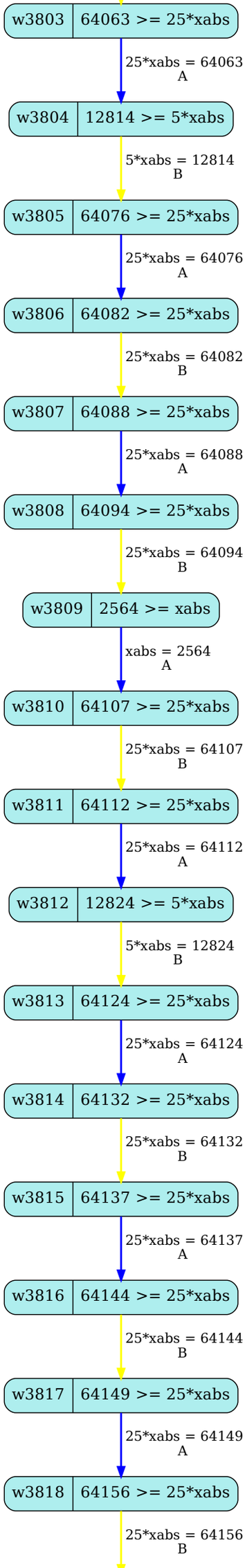
w3803
64063 >= 25*xabs
25*xabs = 64063
A
w3804
12814 >= 5*xabs
5*xabs = 12814
B
w3805
64076 >= 25*xabs
25*xabs = 64076
A
w3806
64082 >= 25*xabs
25*xabs = 64082
B
w3807
64088 >= 25*xabs
25*xabs = 64088
A
w3808
64094 >= 25*xabs
25*xabs = 64094
B
w3809
2564 >= xabs
xabs = 2564
A
w3810
64107 >= 25*xabs
25*xabs = 64107
B
w3811
64112 >= 25*xabs
25*xabs = 64112
A
w3812
12824 >= 5*xabs
5*xabs = 12824
B
w3813
64124 >= 25*xabs
25*xabs = 64124
A
w3814
64132 >= 25*xabs
25*xabs = 64132
B
w3815
64137 >= 25*xabs
25*xabs = 64137
A
w3816
64144 >= 25*xabs
25*xabs = 64144
B
w3817
64149 >= 25*xabs
25*xabs = 64149
A
w3818
64156 >= 25*xabs
25*xabs = 64156
B

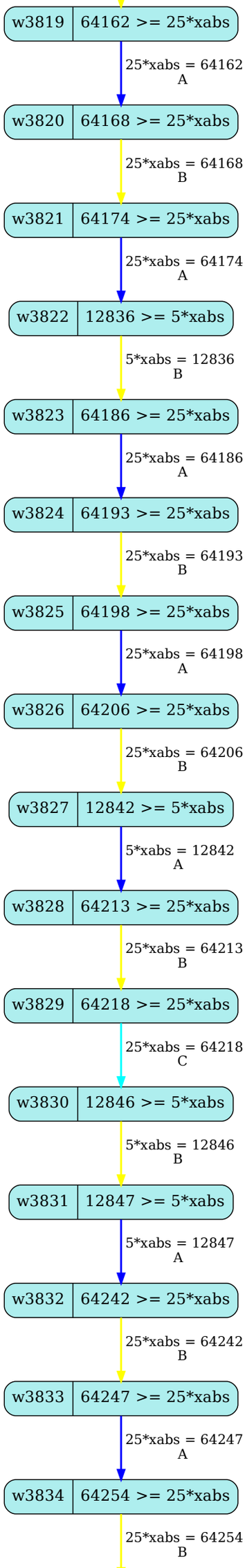
w3819
64162 >= 25*xabs
25*xabs = 64162
A
w3820
64168 >= 25*xabs
25*xabs = 64168
B
w3821
64174 >= 25*xabs
25*xabs = 64174
A
w3822
12836 >= 5*xabs
5*xabs = 12836
B
w3823
64186 >= 25*xabs
25*xabs = 64186
A
w3824
64193 >= 25*xabs
25*xabs = 64193
B
w3825
64198 >= 25*xabs
25*xabs = 64198
A
w3826
64206 >= 25*xabs
25*xabs = 64206
B
w3827
12842 >= 5*xabs
5*xabs = 12842
A
w3828
64213 >= 25*xabs
25*xabs = 64213
B
w3829
64218 >= 25*xabs
25*xabs = 64218
C
w3830
12846 >= 5*xabs
5*xabs = 12846
B
w3831
12847 >= 5*xabs
5*xabs = 12847
A
w3832
64242 >= 25*xabs
25*xabs = 64242
B
w3833
64247 >= 25*xabs
25*xabs = 64247
A
w3834
64254 >= 25*xabs
25*xabs = 64254
B

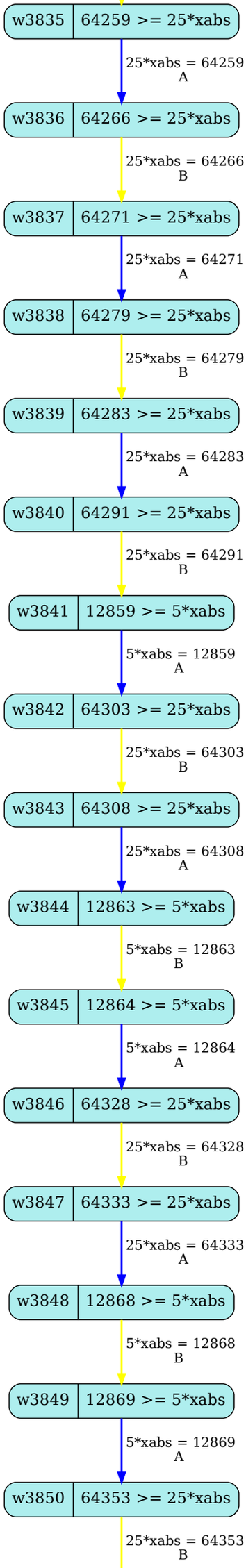
w3835
64259 >= 25*xabs
25*xabs = 64259
A
w3836
64266 >= 25*xabs
25*xabs = 64266
B
w3837
64271 >= 25*xabs
25*xabs = 64271
A
w3838
64279 >= 25*xabs
25*xabs = 64279
B
w3839
64283 >= 25*xabs
25*xabs = 64283
A
w3840
64291 >= 25*xabs
25*xabs = 64291
B
w3841
12859 >= 5*xabs
5*xabs = 12859
A
w3842
64303 >= 25*xabs
25*xabs = 64303
B
w3843
64308 >= 25*xabs
25*xabs = 64308
A
w3844
12863 >= 5*xabs
5*xabs = 12863
B
w3845
12864 >= 5*xabs
5*xabs = 12864
A
w3846
64328 >= 25*xabs
25*xabs = 64328
B
w3847
64333 >= 25*xabs
25*xabs = 64333
A
w3848
12868 >= 5*xabs
5*xabs = 12868
B
w3849
12869 >= 5*xabs
5*xabs = 12869
A
w3850
64353 >= 25*xabs
25*xabs = 64353
B

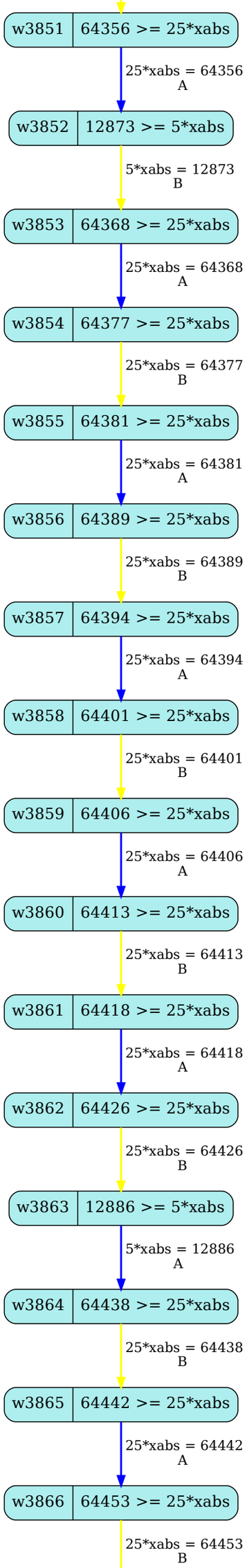
w3851
64356 >= 25*xabs
25*xabs = 64356
A
w3852
12873 >= 5*xabs
5*xabs = 12873
B
w3853
64368 >= 25*xabs
25*xabs = 64368
A
w3854
64377 >= 25*xabs
25*xabs = 64377
B
w3855
64381 >= 25*xabs
25*xabs = 64381
A
w3856
64389 >= 25*xabs
25*xabs = 64389
B
w3857
64394 >= 25*xabs
25*xabs = 64394
A
w3858
64401 >= 25*xabs
25*xabs = 64401
B
w3859
64406 >= 25*xabs
25*xabs = 64406
A
w3860
64413 >= 25*xabs
25*xabs = 64413
B
w3861
64418 >= 25*xabs
25*xabs = 64418
A
w3862
64426 >= 25*xabs
25*xabs = 64426
B
w3863
12886 >= 5*xabs
5*xabs = 12886
A
w3864
64438 >= 25*xabs
25*xabs = 64438
B
w3865
64442 >= 25*xabs
25*xabs = 64442
A
w3866
64453 >= 25*xabs
25*xabs = 64453
B

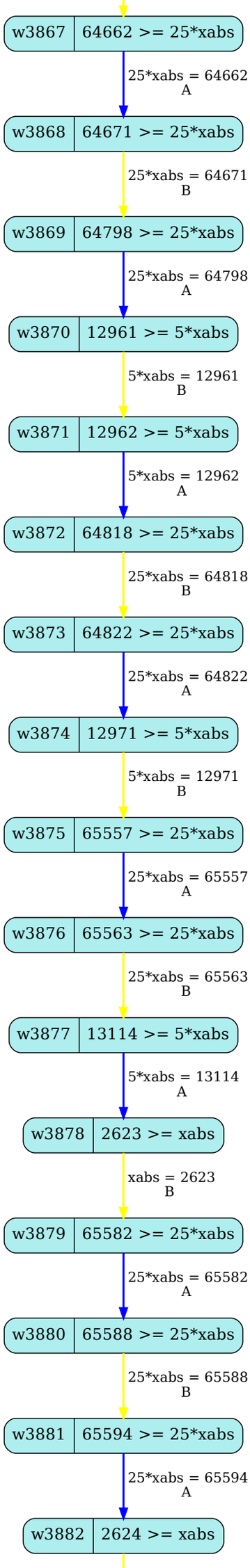
w3867
64662 >= 25*xabs
25*xabs = 64662
A
w3868
64671 >= 25*xabs
25*xabs = 64671
B
w3869
64798 >= 25*xabs
25*xabs = 64798
A
w3870
12961 >= 5*xabs
5*xabs = 12961
B
w3871
12962 >= 5*xabs
5*xabs = 12962
A
w3872
64818 >= 25*xabs
25*xabs = 64818
B
w3873
64822 >= 25*xabs
25*xabs = 64822
A
w3874
12971 >= 5*xabs
5*xabs = 12971
B
w3875
65557 >= 25*xabs
25*xabs = 65557
A
w3876
65563 >= 25*xabs
25*xabs = 65563
B
w3877
13114 >= 5*xabs
5*xabs = 13114
A
w3878
2623 >= xabs
xabs = 2623
B
w3879
65582 >= 25*xabs
25*xabs = 65582
A
w3880
65588 >= 25*xabs
25*xabs = 65588
B
w3881
65594 >= 25*xabs
25*xabs = 65594
A
w3882
2624 >= xabs

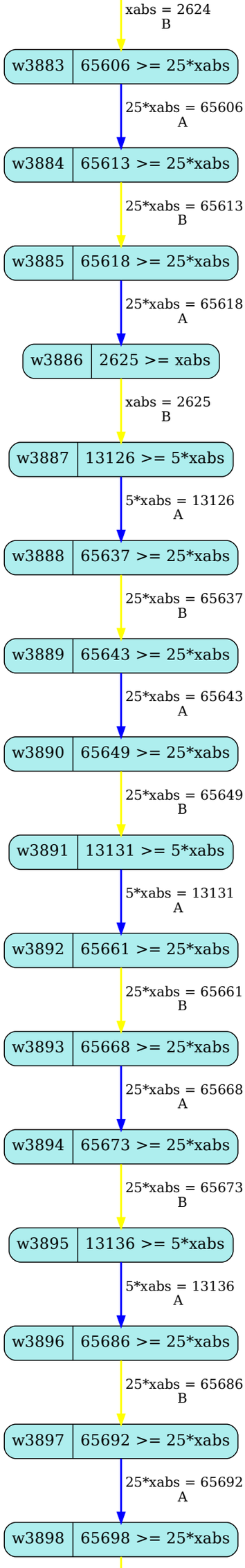
xabs = 2624
B
w3883
65606 >= 25*xabs
25*xabs = 65606
A
w3884
65613 >= 25*xabs
25*xabs = 65613
B
w3885
65618 >= 25*xabs
25*xabs = 65618
A
w3886
2625 >= xabs
xabs = 2625
B
w3887
13126 >= 5*xabs
5*xabs = 13126
A
w3888
65637 >= 25*xabs
25*xabs = 65637
B
w3889
65643 >= 25*xabs
25*xabs = 65643
A
w3890
65649 >= 25*xabs
25*xabs = 65649
B
w3891
13131 >= 5*xabs
5*xabs = 13131
A
w3892
65661 >= 25*xabs
25*xabs = 65661
B
w3893
65668 >= 25*xabs
25*xabs = 65668
A
w3894
65673 >= 25*xabs
25*xabs = 65673
B
w3895
13136 >= 5*xabs
5*xabs = 13136
A
w3896
65686 >= 25*xabs
25*xabs = 65686
B
w3897
65692 >= 25*xabs
25*xabs = 65692
A
w3898
65698 >= 25*xabs

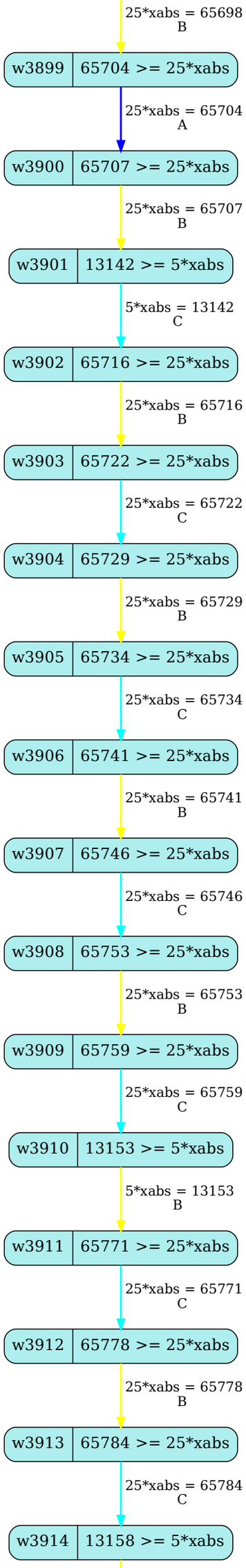
25*xabs = 65698
B
w3899
65704 >= 25*xabs
25*xabs = 65704
A
w3900
65707 >= 25*xabs
25*xabs = 65707
B
w3901
13142 >= 5*xabs
5*xabs = 13142
C
w3902
65716 >= 25*xabs
25*xabs = 65716
B
w3903
65722 >= 25*xabs
25*xabs = 65722
C
w3904
65729 >= 25*xabs
25*xabs = 65729
B
w3905
65734 >= 25*xabs
25*xabs = 65734
C
w3906
65741 >= 25*xabs
25*xabs = 65741
B
w3907
65746 >= 25*xabs
25*xabs = 65746
C
w3908
65753 >= 25*xabs
25*xabs = 65753
B
w3909
65759 >= 25*xabs
25*xabs = 65759
C
w3910
13153 >= 5*xabs
5*xabs = 13153
B
w3911
65771 >= 25*xabs
25*xabs = 65771
C
w3912
65778 >= 25*xabs
25*xabs = 65778
B
w3913
65784 >= 25*xabs
25*xabs = 65784
C
w3914
13158 >= 5*xabs

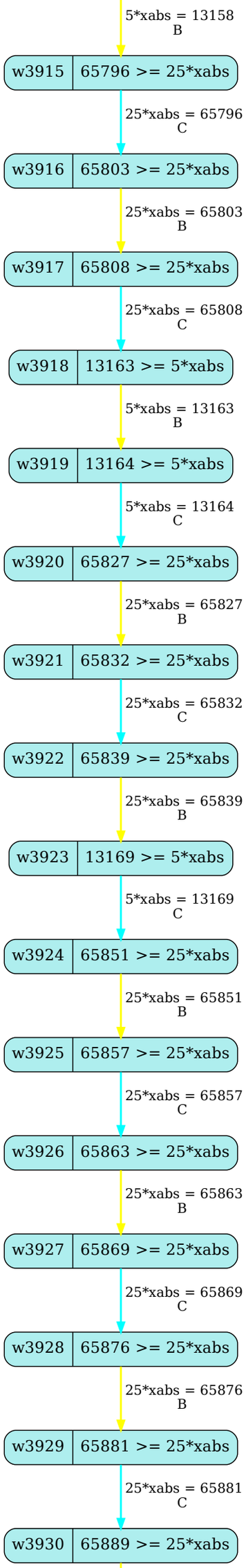
5*xabs = 13158
B
w3915
65796 >= 25*xabs
25*xabs = 65796
C
w3916
65803 >= 25*xabs
25*xabs = 65803
B
w3917
65808 >= 25*xabs
25*xabs = 65808
C
w3918
13163 >= 5*xabs
5*xabs = 13163
B
w3919
13164 >= 5*xabs
5*xabs = 13164
C
w3920
65827 >= 25*xabs
25*xabs = 65827
B
w3921
65832 >= 25*xabs
25*xabs = 65832
C
w3922
65839 >= 25*xabs
25*xabs = 65839
B
w3923
13169 >= 5*xabs
5*xabs = 13169
C
w3924
65851 >= 25*xabs
25*xabs = 65851
B
w3925
65857 >= 25*xabs
25*xabs = 65857
C
w3926
65863 >= 25*xabs
25*xabs = 65863
B
w3927
65869 >= 25*xabs
25*xabs = 65869
C
w3928
65876 >= 25*xabs
25*xabs = 65876
B
w3929
65881 >= 25*xabs
25*xabs = 65881
C
w3930
65889 >= 25*xabs

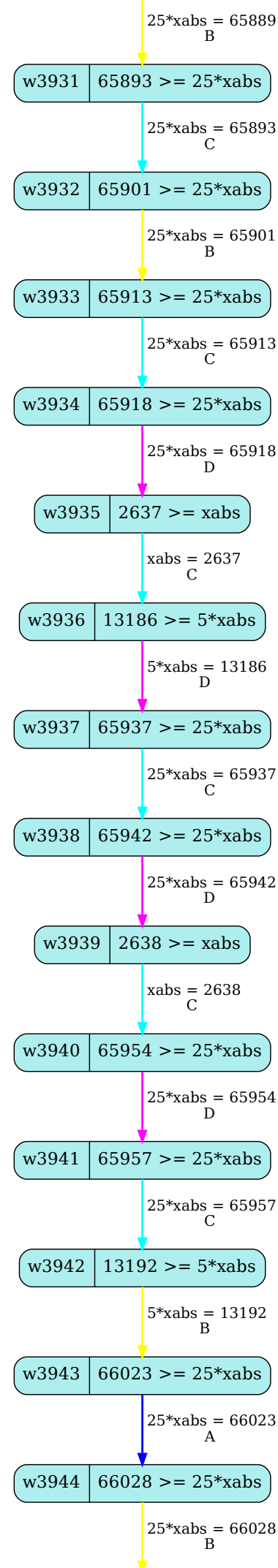
25*xabs = 65889
B
w3931
65893 >= 25*xabs
25*xabs = 65893
C
w3932
65901 >= 25*xabs
25*xabs = 65901
B
w3933
65913 >= 25*xabs
25*xabs = 65913
C
w3934
65918 >= 25*xabs
25*xabs = 65918
D
w3935
2637 >= xabs
xabs = 2637
C
w3936
13186 >= 5*xabs
5*xabs = 13186
D
w3937
65937 >= 25*xabs
25*xabs = 65937
C
w3938
65942 >= 25*xabs
25*xabs = 65942
D
w3939
2638 >= xabs
xabs = 2638
C
w3940
65954 >= 25*xabs
25*xabs = 65954
D
w3941
65957 >= 25*xabs
25*xabs = 65957
C
w3942
13192 >= 5*xabs
5*xabs = 13192
B
w3943
66023 >= 25*xabs
25*xabs = 66023
A
w3944
66028 >= 25*xabs
25*xabs = 66028
B

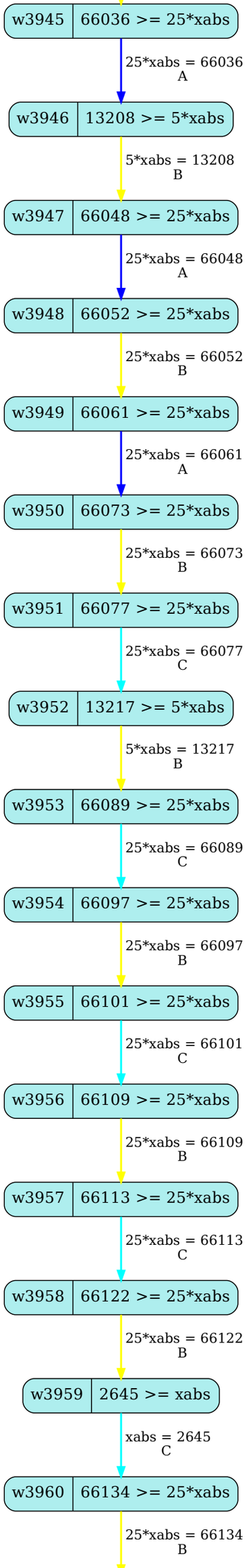
w3945
66036 >= 25*xabs
25*xabs = 66036
A
w3946
13208 >= 5*xabs
5*xabs = 13208
B
w3947
66048 >= 25*xabs
25*xabs = 66048
A
w3948
66052 >= 25*xabs
25*xabs = 66052
B
w3949
66061 >= 25*xabs
25*xabs = 66061
A
w3950
66073 >= 25*xabs
25*xabs = 66073
B
w3951
66077 >= 25*xabs
25*xabs = 66077
C
w3952
13217 >= 5*xabs
5*xabs = 13217
B
w3953
66089 >= 25*xabs
25*xabs = 66089
C
w3954
66097 >= 25*xabs
25*xabs = 66097
B
w3955
66101 >= 25*xabs
25*xabs = 66101
C
w3956
66109 >= 25*xabs
25*xabs = 66109
B
w3957
66113 >= 25*xabs
25*xabs = 66113
C
w3958
66122 >= 25*xabs
25*xabs = 66122
B
w3959
2645 >= xabs
xabs = 2645
C
w3960
66134 >= 25*xabs
25*xabs = 66134
B

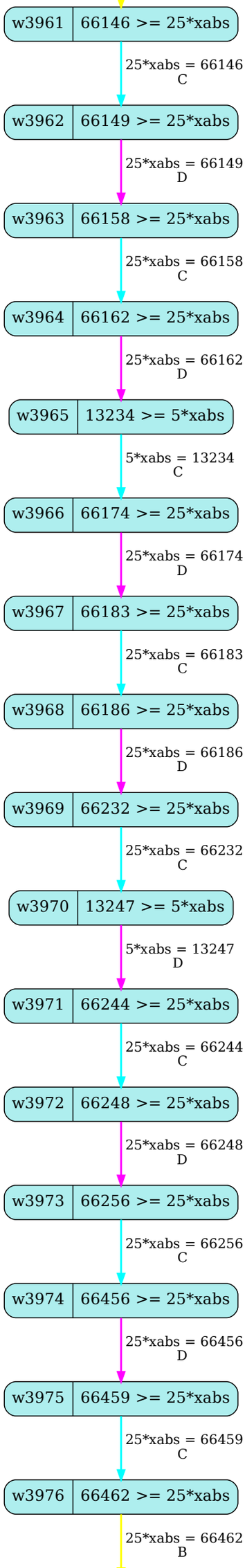
w3961
66146 >= 25*xabs
25*xabs = 66146
C
w3962
66149 >= 25*xabs
25*xabs = 66149
D
w3963
66158 >= 25*xabs
25*xabs = 66158
C
w3964
66162 >= 25*xabs
25*xabs = 66162
D
w3965
13234 >= 5*xabs
5*xabs = 13234
C
w3966
66174 >= 25*xabs
25*xabs = 66174
D
w3967
66183 >= 25*xabs
25*xabs = 66183
C
w3968
66186 >= 25*xabs
25*xabs = 66186
D
w3969
66232 >= 25*xabs
25*xabs = 66232
C
w3970
13247 >= 5*xabs
5*xabs = 13247
D
w3971
66244 >= 25*xabs
25*xabs = 66244
C
w3972
66248 >= 25*xabs
25*xabs = 66248
D
w3973
66256 >= 25*xabs
25*xabs = 66256
C
w3974
66456 >= 25*xabs
25*xabs = 66456
D
w3975
66459 >= 25*xabs
25*xabs = 66459
C
w3976
66462 >= 25*xabs
25*xabs = 66462
B

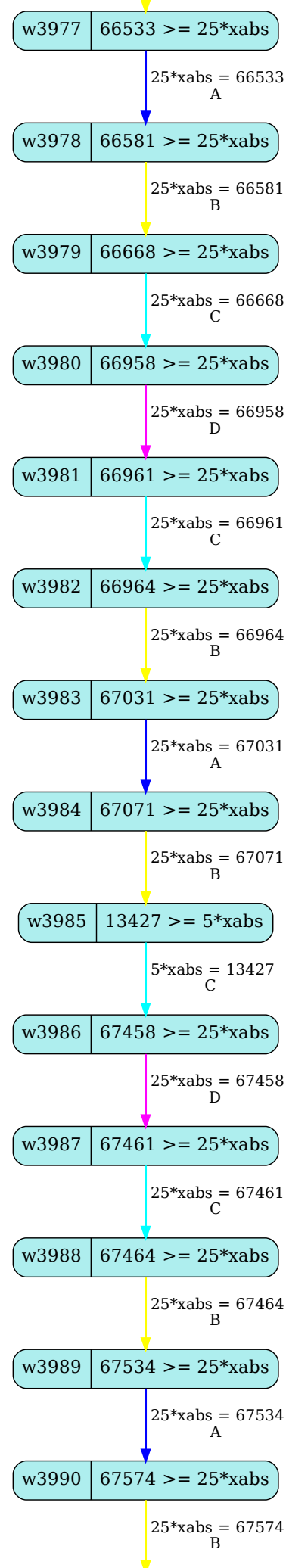
w3977
66533 >= 25*xabs
25*xabs = 66533
A
w3978
66581 >= 25*xabs
25*xabs = 66581
B
w3979
66668 >= 25*xabs
25*xabs = 66668
C
w3980
66958 >= 25*xabs
25*xabs = 66958
D
w3981
66961 >= 25*xabs
25*xabs = 66961
C
w3982
66964 >= 25*xabs
25*xabs = 66964
B
w3983
67031 >= 25*xabs
25*xabs = 67031
A
w3984
67071 >= 25*xabs
25*xabs = 67071
B
w3985
13427 >= 5*xabs
5*xabs = 13427
C
w3986
67458 >= 25*xabs
25*xabs = 67458
D
w3987
67461 >= 25*xabs
25*xabs = 67461
C
w3988
67464 >= 25*xabs
25*xabs = 67464
B
w3989
67534 >= 25*xabs
25*xabs = 67534
A
w3990
67574 >= 25*xabs
25*xabs = 67574
B

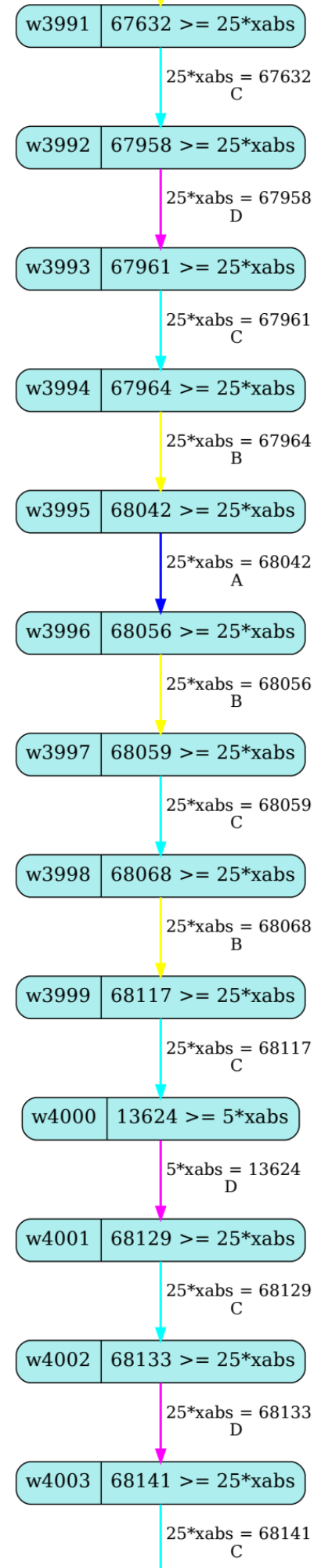
w3991
67632 >= 25*xabs
25*xabs = 67632
C
w3992
67958 >= 25*xabs
25*xabs = 67958
D
w3993
67961 >= 25*xabs
25*xabs = 67961
C
w3994
67964 >= 25*xabs
25*xabs = 67964
B
w3995
68042 >= 25*xabs
25*xabs = 68042
A
w3996
68056 >= 25*xabs
25*xabs = 68056
B
w3997
68059 >= 25*xabs
25*xabs = 68059
C
w3998
68068 >= 25*xabs
25*xabs = 68068
B
w3999
68117 >= 25*xabs
25*xabs = 68117
C
w4000
13624 >= 5*xabs
5*xabs = 13624
D
w4001
68129 >= 25*xabs
25*xabs = 68129
C
w4002
68133 >= 25*xabs
25*xabs = 68133
D
w4003
68141 >= 25*xabs
25*xabs = 68141
C

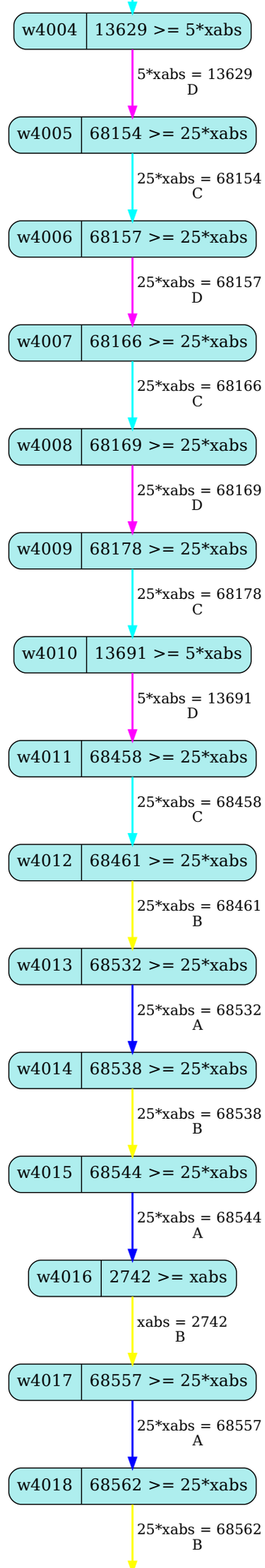
w4004
13629 >= 5*xabs
5*xabs = 13629
D
w4005
68154 >= 25*xabs
25*xabs = 68154
C
w4006
68157 >= 25*xabs
25*xabs = 68157
D
w4007
68166 >= 25*xabs
25*xabs = 68166
C
w4008
68169 >= 25*xabs
25*xabs = 68169
D
w4009
68178 >= 25*xabs
25*xabs = 68178
C
w4010
13691 >= 5*xabs
5*xabs = 13691
D
w4011
68458 >= 25*xabs
25*xabs = 68458
C
w4012
68461 >= 25*xabs
25*xabs = 68461
B
w4013
68532 >= 25*xabs
25*xabs = 68532
A
w4014
68538 >= 25*xabs
25*xabs = 68538
B
w4015
68544 >= 25*xabs
25*xabs = 68544
A
w4016
2742 >= xabs
xabs = 2742
B
w4017
68557 >= 25*xabs
25*xabs = 68557
A
w4018
68562 >= 25*xabs
25*xabs = 68562
B

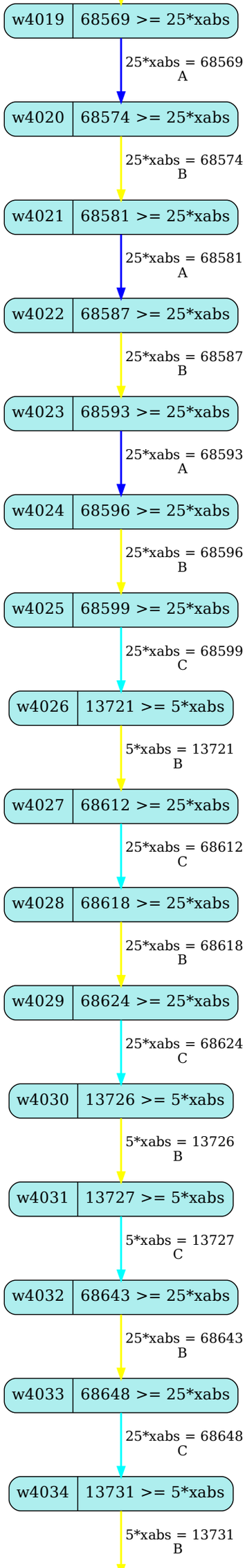
w4019
68569 >= 25*xabs
25*xabs = 68569
A
w4020
68574 >= 25*xabs
25*xabs = 68574
B
w4021
68581 >= 25*xabs
25*xabs = 68581
A
w4022
68587 >= 25*xabs
25*xabs = 68587
B
w4023
68593 >= 25*xabs
25*xabs = 68593
A
w4024
68596 >= 25*xabs
25*xabs = 68596
B
w4025
68599 >= 25*xabs
25*xabs = 68599
C
w4026
13721 >= 5*xabs
5*xabs = 13721
B
w4027
68612 >= 25*xabs
25*xabs = 68612
C
w4028
68618 >= 25*xabs
25*xabs = 68618
B
w4029
68624 >= 25*xabs
25*xabs = 68624
C
w4030
13726 >= 5*xabs
5*xabs = 13726
B
w4031
13727 >= 5*xabs
5*xabs = 13727
C
w4032
68643 >= 25*xabs
25*xabs = 68643
B
w4033
68648 >= 25*xabs
25*xabs = 68648
C
w4034
13731 >= 5*xabs
5*xabs = 13731
B

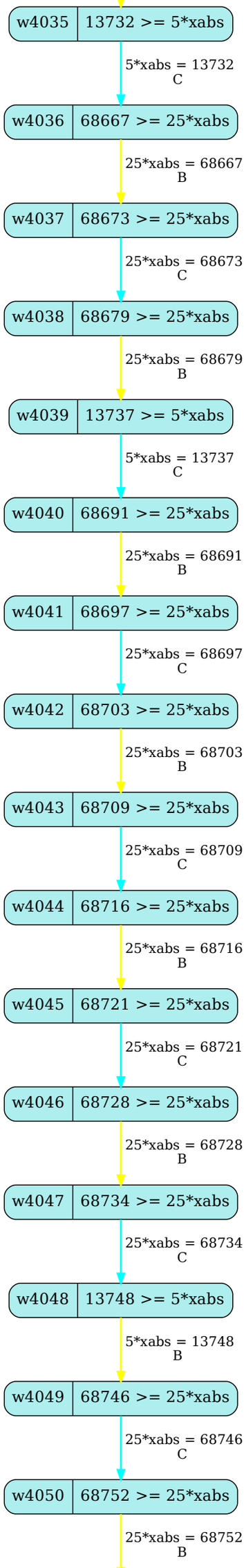
w4035
13732 >= 5*xabs
5*xabs = 13732
C
w4036
68667 >= 25*xabs
25*xabs = 68667
B
w4037
68673 >= 25*xabs
25*xabs = 68673
C
w4038
68679 >= 25*xabs
25*xabs = 68679
B
w4039
13737 >= 5*xabs
5*xabs = 13737
C
w4040
68691 >= 25*xabs
25*xabs = 68691
B
w4041
68697 >= 25*xabs
25*xabs = 68697
C
w4042
68703 >= 25*xabs
25*xabs = 68703
B
w4043
68709 >= 25*xabs
25*xabs = 68709
C
w4044
68716 >= 25*xabs
25*xabs = 68716
B
w4045
68721 >= 25*xabs
25*xabs = 68721
C
w4046
68728 >= 25*xabs
25*xabs = 68728
B
w4047
68734 >= 25*xabs
25*xabs = 68734
C
w4048
13748 >= 5*xabs
5*xabs = 13748
B
w4049
68746 >= 25*xabs
25*xabs = 68746
C
w4050
68752 >= 25*xabs
25*xabs = 68752
B

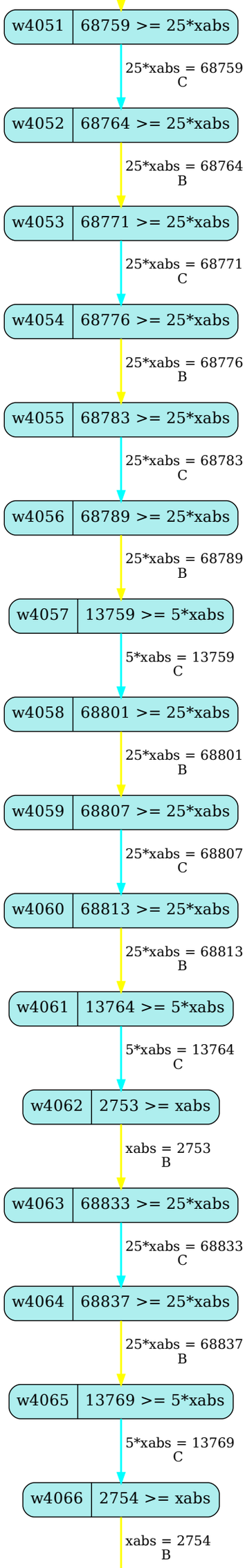
w4051
68759 >= 25*xabs
25*xabs = 68759
C
w4052
68764 >= 25*xabs
25*xabs = 68764
B
w4053
68771 >= 25*xabs
25*xabs = 68771
C
w4054
68776 >= 25*xabs
25*xabs = 68776
B
w4055
68783 >= 25*xabs
25*xabs = 68783
C
w4056
68789 >= 25*xabs
25*xabs = 68789
B
w4057
13759 >= 5*xabs
5*xabs = 13759
C
w4058
68801 >= 25*xabs
25*xabs = 68801
B
w4059
68807 >= 25*xabs
25*xabs = 68807
C
w4060
68813 >= 25*xabs
25*xabs = 68813
B
w4061
13764 >= 5*xabs
5*xabs = 13764
C
w4062
2753 >= xabs
xabs = 2753
B
w4063
68833 >= 25*xabs
25*xabs = 68833
C
w4064
68837 >= 25*xabs
25*xabs = 68837
B
w4065
13769 >= 5*xabs
5*xabs = 13769
C
w4066
2754 >= xabs
xabs = 2754
B

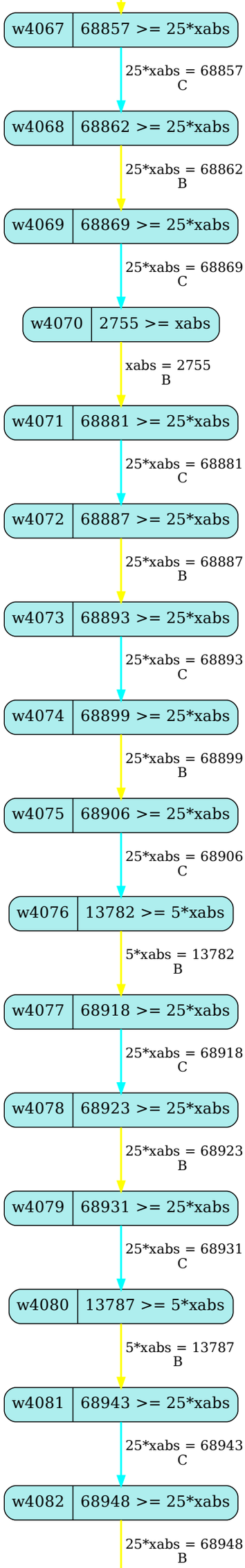
w4067
68857 >= 25*xabs
25*xabs = 68857
C
w4068
68862 >= 25*xabs
25*xabs = 68862
B
w4069
68869 >= 25*xabs
25*xabs = 68869
C
w4070
2755 >= xabs
xabs = 2755
B
w4071
68881 >= 25*xabs
25*xabs = 68881
C
w4072
68887 >= 25*xabs
25*xabs = 68887
B
w4073
68893 >= 25*xabs
25*xabs = 68893
C
w4074
68899 >= 25*xabs
25*xabs = 68899
B
w4075
68906 >= 25*xabs
25*xabs = 68906
C
w4076
13782 >= 5*xabs
5*xabs = 13782
B
w4077
68918 >= 25*xabs
25*xabs = 68918
C
w4078
68923 >= 25*xabs
25*xabs = 68923
B
w4079
68931 >= 25*xabs
25*xabs = 68931
C
w4080
13787 >= 5*xabs
5*xabs = 13787
B
w4081
68943 >= 25*xabs
25*xabs = 68943
C
w4082
68948 >= 25*xabs
25*xabs = 68948
B

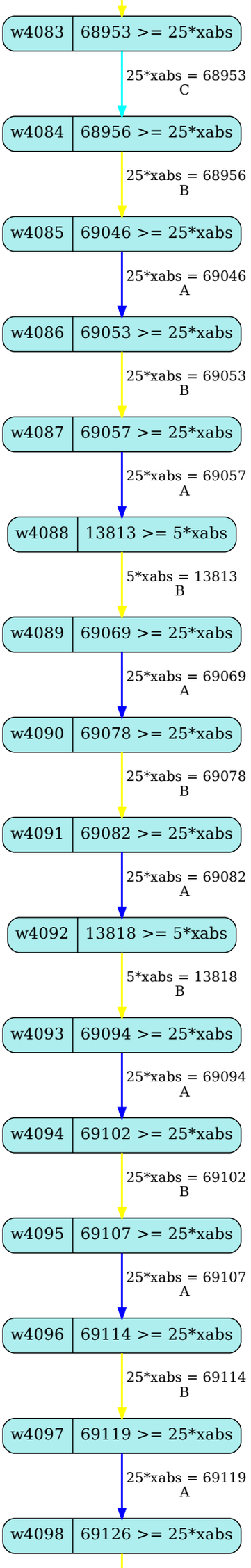
w4083
68953 >= 25*xabs
25*xabs = 68953
C
w4084
68956 >= 25*xabs
25*xabs = 68956
B
w4085
69046 >= 25*xabs
25*xabs = 69046
A
w4086
69053 >= 25*xabs
25*xabs = 69053
B
w4087
69057 >= 25*xabs
25*xabs = 69057
A
w4088
13813 >= 5*xabs
5*xabs = 13813
B
w4089
69069 >= 25*xabs
25*xabs = 69069
A
w4090
69078 >= 25*xabs
25*xabs = 69078
B
w4091
69082 >= 25*xabs
25*xabs = 69082
A
w4092
13818 >= 5*xabs
5*xabs = 13818
B
w4093
69094 >= 25*xabs
25*xabs = 69094
A
w4094
69102 >= 25*xabs
25*xabs = 69102
B
w4095
69107 >= 25*xabs
25*xabs = 69107
A
w4096
69114 >= 25*xabs
25*xabs = 69114
B
w4097
69119 >= 25*xabs
25*xabs = 69119
A
w4098
69126 >= 25*xabs

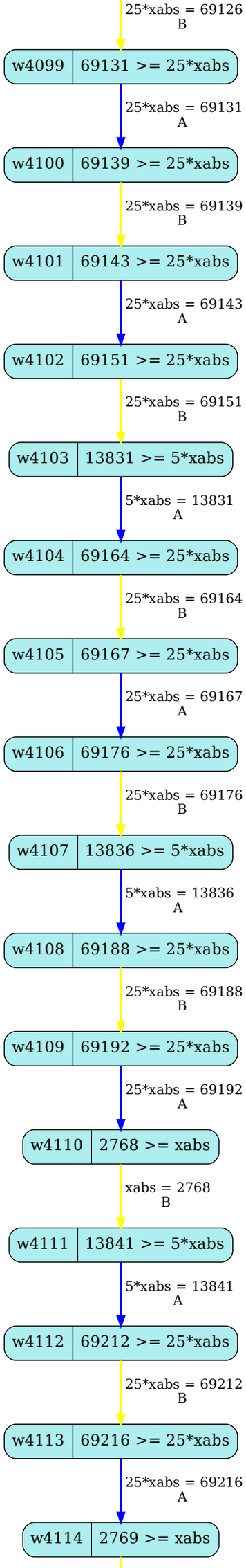
25*xabs = 69126
B
w4099
69131 >= 25*xabs
25*xabs = 69131
A
w4100
69139 >= 25*xabs
25*xabs = 69139
B
w4101
69143 >= 25*xabs
25*xabs = 69143
A
w4102
69151 >= 25*xabs
25*xabs = 69151
B
w4103
13831 >= 5*xabs
5*xabs = 13831
A
w4104
69164 >= 25*xabs
25*xabs = 69164
B
w4105
69167 >= 25*xabs
25*xabs = 69167
A
w4106
69176 >= 25*xabs
25*xabs = 69176
B
w4107
13836 >= 5*xabs
5*xabs = 13836
A
w4108
69188 >= 25*xabs
25*xabs = 69188
B
w4109
69192 >= 25*xabs
25*xabs = 69192
A
w4110
2768 >= xabs
xabs = 2768
B
w4111
13841 >= 5*xabs
5*xabs = 13841
A
w4112
69212 >= 25*xabs
25*xabs = 69212
B
w4113
69216 >= 25*xabs
25*xabs = 69216
A
w4114
2769 >= xabs

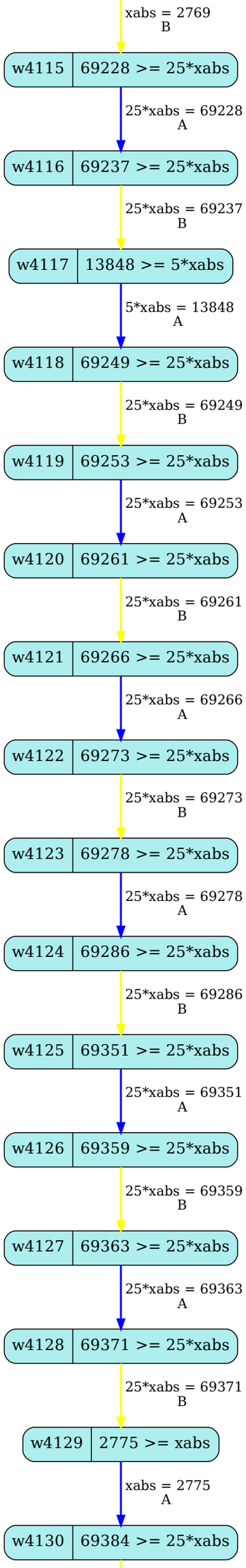
xabs = 2769
B
w4115
69228 >= 25*xabs
25*xabs = 69228
A
w4116
69237 >= 25*xabs
25*xabs = 69237
B
w4117
13848 >= 5*xabs
5*xabs = 13848
A
w4118
69249 >= 25*xabs
25*xabs = 69249
B
w4119
69253 >= 25*xabs
25*xabs = 69253
A
w4120
69261 >= 25*xabs
25*xabs = 69261
B
w4121
69266 >= 25*xabs
25*xabs = 69266
A
w4122
69273 >= 25*xabs
25*xabs = 69273
B
w4123
69278 >= 25*xabs
25*xabs = 69278
A
w4124
69286 >= 25*xabs
25*xabs = 69286
B
w4125
69351 >= 25*xabs
25*xabs = 69351
A
w4126
69359 >= 25*xabs
25*xabs = 69359
B
w4127
69363 >= 25*xabs
25*xabs = 69363
A
w4128
69371 >= 25*xabs
25*xabs = 69371
B
w4129
2775 >= xabs
xabs = 2775
A
w4130
69384 >= 25*xabs

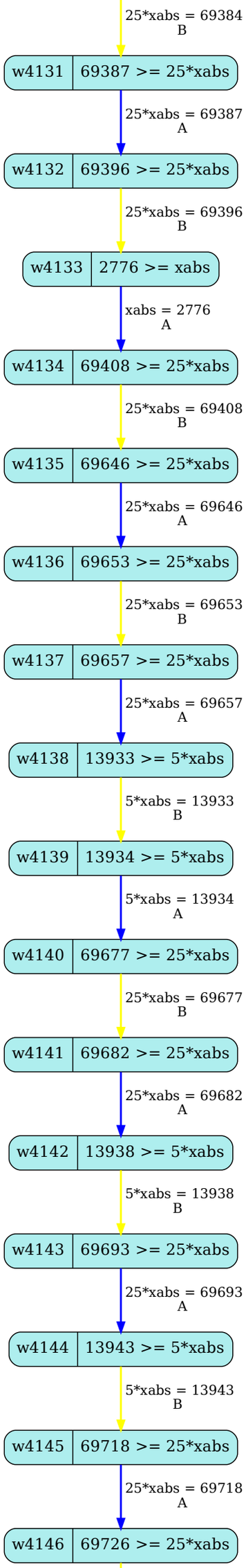
25*xabs = 69384
B
w4131
69387 >= 25*xabs
25*xabs = 69387
A
w4132
69396 >= 25*xabs
25*xabs = 69396
B
w4133
2776 >= xabs
xabs = 2776
A
w4134
69408 >= 25*xabs
25*xabs = 69408
B
w4135
69646 >= 25*xabs
25*xabs = 69646
A
w4136
69653 >= 25*xabs
25*xabs = 69653
B
w4137
69657 >= 25*xabs
25*xabs = 69657
A
w4138
13933 >= 5*xabs
5*xabs = 13933
B
w4139
13934 >= 5*xabs
5*xabs = 13934
A
w4140
69677 >= 25*xabs
25*xabs = 69677
B
w4141
69682 >= 25*xabs
25*xabs = 69682
A
w4142
13938 >= 5*xabs
5*xabs = 13938
B
w4143
69693 >= 25*xabs
25*xabs = 69693
A
w4144
13943 >= 5*xabs
5*xabs = 13943
B
w4145
69718 >= 25*xabs
25*xabs = 69718
A
w4146
69726 >= 25*xabs

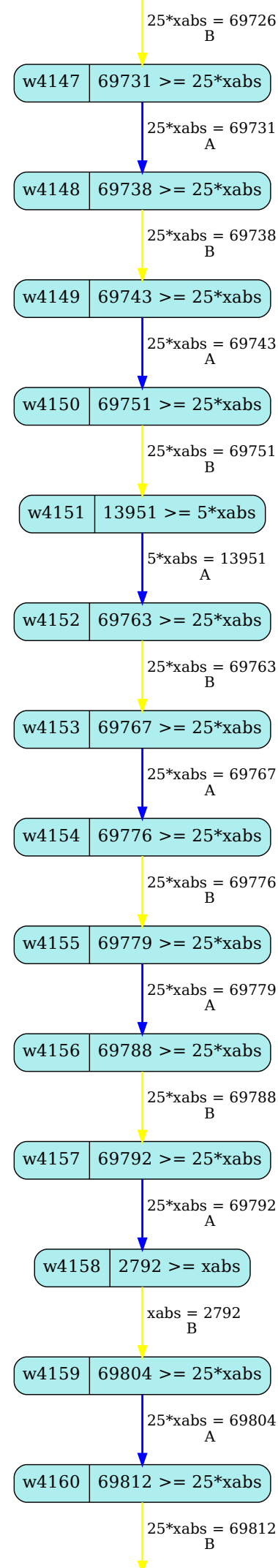
25*xabs = 69726
B
w4147
69731 >= 25*xabs
25*xabs = 69731
A
w4148
69738 >= 25*xabs
25*xabs = 69738
B
w4149
69743 >= 25*xabs
25*xabs = 69743
A
w4150
69751 >= 25*xabs
25*xabs = 69751
B
w4151
13951 >= 5*xabs
5*xabs = 13951
A
w4152
69763 >= 25*xabs
25*xabs = 69763
B
w4153
69767 >= 25*xabs
25*xabs = 69767
A
w4154
69776 >= 25*xabs
25*xabs = 69776
B
w4155
69779 >= 25*xabs
25*xabs = 69779
A
w4156
69788 >= 25*xabs
25*xabs = 69788
B
w4157
69792 >= 25*xabs
25*xabs = 69792
A
w4158
2792 >= xabs
xabs = 2792
B
w4159
69804 >= 25*xabs
25*xabs = 69804
A
w4160
69812 >= 25*xabs
25*xabs = 69812
B

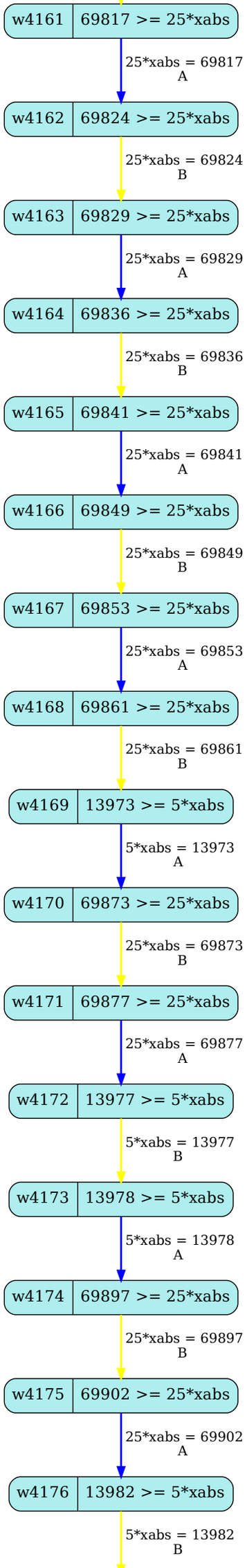
w4161
69817 >= 25*xabs
25*xabs = 69817
A
w4162
69824 >= 25*xabs
25*xabs = 69824
B
w4163
69829 >= 25*xabs
25*xabs = 69829
A
w4164
69836 >= 25*xabs
25*xabs = 69836
B
w4165
69841 >= 25*xabs
25*xabs = 69841
A
w4166
69849 >= 25*xabs
25*xabs = 69849
B
w4167
69853 >= 25*xabs
25*xabs = 69853
A
w4168
69861 >= 25*xabs
25*xabs = 69861
B
w4169
13973 >= 5*xabs
5*xabs = 13973
A
w4170
69873 >= 25*xabs
25*xabs = 69873
B
w4171
69877 >= 25*xabs
25*xabs = 69877
A
w4172
13977 >= 5*xabs
5*xabs = 13977
B
w4173
13978 >= 5*xabs
5*xabs = 13978
A
w4174
69897 >= 25*xabs
25*xabs = 69897
B
w4175
69902 >= 25*xabs
25*xabs = 69902
A
w4176
13982 >= 5*xabs
5*xabs = 13982
B

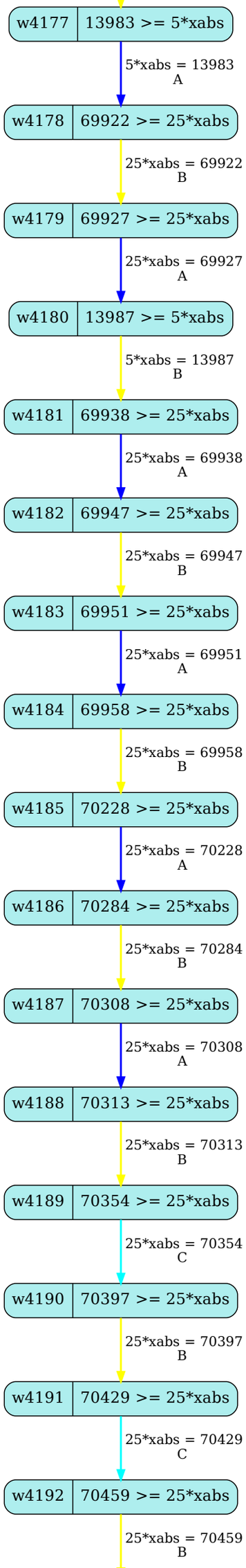
w4177
13983 >= 5*xabs
5*xabs = 13983
A
w4178
69922 >= 25*xabs
25*xabs = 69922
B
w4179
69927 >= 25*xabs
25*xabs = 69927
A
w4180
13987 >= 5*xabs
5*xabs = 13987
B
w4181
69938 >= 25*xabs
25*xabs = 69938
A
w4182
69947 >= 25*xabs
25*xabs = 69947
B
w4183
69951 >= 25*xabs
25*xabs = 69951
A
w4184
69958 >= 25*xabs
25*xabs = 69958
B
w4185
70228 >= 25*xabs
25*xabs = 70228
A
w4186
70284 >= 25*xabs
25*xabs = 70284
B
w4187
70308 >= 25*xabs
25*xabs = 70308
A
w4188
70313 >= 25*xabs
25*xabs = 70313
B
w4189
70354 >= 25*xabs
25*xabs = 70354
C
w4190
70397 >= 25*xabs
25*xabs = 70397
B
w4191
70429 >= 25*xabs
25*xabs = 70429
C
w4192
70459 >= 25*xabs
25*xabs = 70459
B

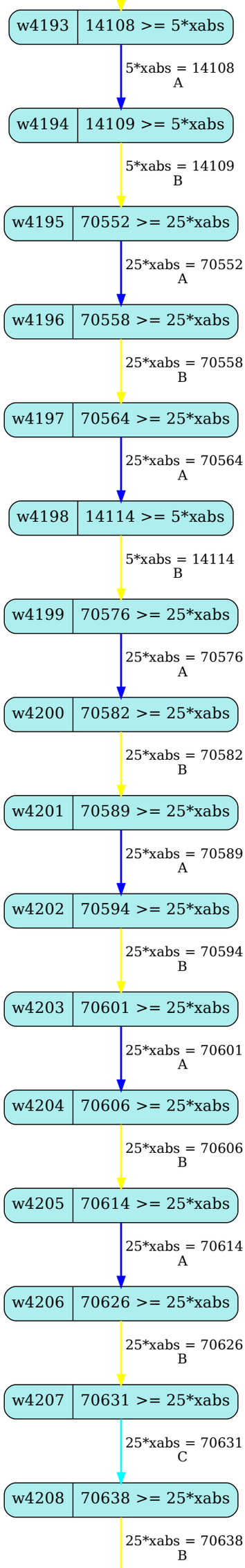
w4193
14108 >= 5*xabs
5*xabs = 14108
A
w4194
14109 >= 5*xabs
5*xabs = 14109
B
w4195
70552 >= 25*xabs
25*xabs = 70552
A
w4196
70558 >= 25*xabs
25*xabs = 70558
B
w4197
70564 >= 25*xabs
25*xabs = 70564
A
w4198
14114 >= 5*xabs
5*xabs = 14114
B
w4199
70576 >= 25*xabs
25*xabs = 70576
A
w4200
70582 >= 25*xabs
25*xabs = 70582
B
w4201
70589 >= 25*xabs
25*xabs = 70589
A
w4202
70594 >= 25*xabs
25*xabs = 70594
B
w4203
70601 >= 25*xabs
25*xabs = 70601
A
w4204
70606 >= 25*xabs
25*xabs = 70606
B
w4205
70614 >= 25*xabs
25*xabs = 70614
A
w4206
70626 >= 25*xabs
25*xabs = 70626
B
w4207
70631 >= 25*xabs
25*xabs = 70631
C
w4208
70638 >= 25*xabs
25*xabs = 70638
B

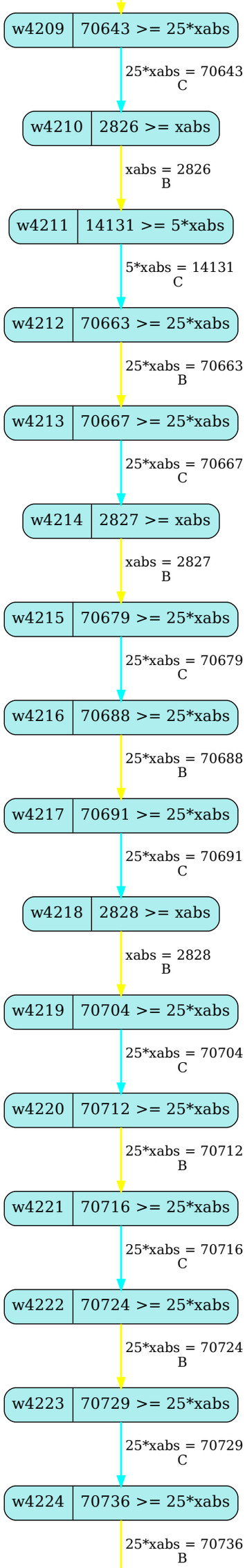
w4209
70643 >= 25*xabs
25*xabs = 70643
C
w4210
2826 >= xabs
xabs = 2826
B
w4211
14131 >= 5*xabs
5*xabs = 14131
C
w4212
70663 >= 25*xabs
25*xabs = 70663
B
w4213
70667 >= 25*xabs
25*xabs = 70667
C
w4214
2827 >= xabs
xabs = 2827
B
w4215
70679 >= 25*xabs
25*xabs = 70679
C
w4216
70688 >= 25*xabs
25*xabs = 70688
B
w4217
70691 >= 25*xabs
25*xabs = 70691
C
w4218
2828 >= xabs
xabs = 2828
B
w4219
70704 >= 25*xabs
25*xabs = 70704
C
w4220
70712 >= 25*xabs
25*xabs = 70712
B
w4221
70716 >= 25*xabs
25*xabs = 70716
C
w4222
70724 >= 25*xabs
25*xabs = 70724
B
w4223
70729 >= 25*xabs
25*xabs = 70729
C
w4224
70736 >= 25*xabs
25*xabs = 70736
B

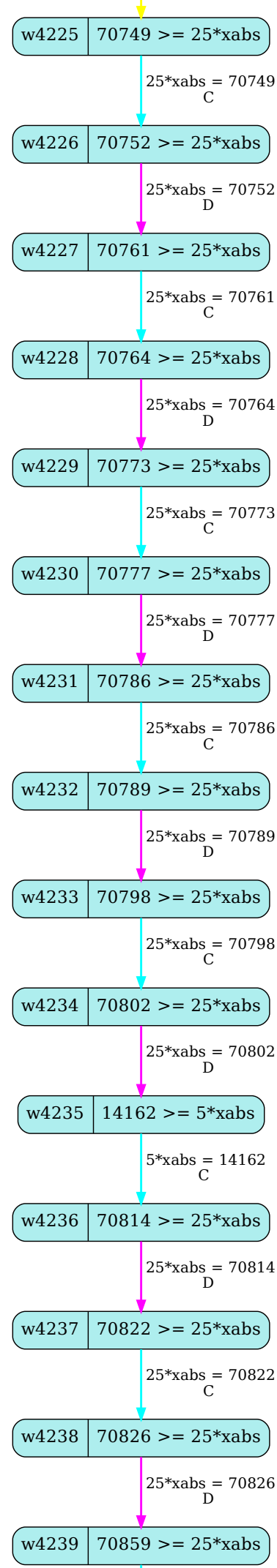
w4225
70749 >= 25*xabs
25*xabs = 70749
C
w4226
70752 >= 25*xabs
25*xabs = 70752
D
w4227
70761 >= 25*xabs
25*xabs = 70761
C
w4228
70764 >= 25*xabs
25*xabs = 70764
D
w4229
70773 >= 25*xabs
25*xabs = 70773
C
w4230
70777 >= 25*xabs
25*xabs = 70777
D
w4231
70786 >= 25*xabs
25*xabs = 70786
C
w4232
70789 >= 25*xabs
25*xabs = 70789
D
w4233
70798 >= 25*xabs
25*xabs = 70798
C
w4234
70802 >= 25*xabs
25*xabs = 70802
D
w4235
14162 >= 5*xabs
5*xabs = 14162
C
w4236
70814 >= 25*xabs
25*xabs = 70814
D
w4237
70822 >= 25*xabs
25*xabs = 70822
C
w4238
70826 >= 25*xabs
25*xabs = 70826
D
w4239
70859 >= 25*xabs

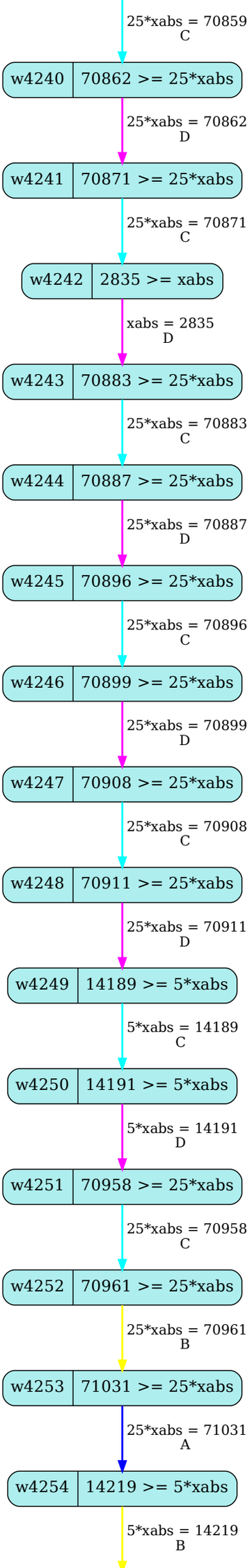
25*xabs = 70859
C
w4240
70862 >= 25*xabs
25*xabs = 70862
D
w4241
70871 >= 25*xabs
25*xabs = 70871
C
w4242
2835 >= xabs
xabs = 2835
D
w4243
70883 >= 25*xabs
25*xabs = 70883
C
w4244
70887 >= 25*xabs
25*xabs = 70887
D
w4245
70896 >= 25*xabs
25*xabs = 70896
C
w4246
70899 >= 25*xabs
25*xabs = 70899
D
w4247
70908 >= 25*xabs
25*xabs = 70908
C
w4248
70911 >= 25*xabs
25*xabs = 70911
D
w4249
14189 >= 5*xabs
5*xabs = 14189
C
w4250
14191 >= 5*xabs
5*xabs = 14191
D
w4251
70958 >= 25*xabs
25*xabs = 70958
C
w4252
70961 >= 25*xabs
25*xabs = 70961
B
w4253
71031 >= 25*xabs
25*xabs = 71031
A
w4254
14219 >= 5*xabs
5*xabs = 14219
B

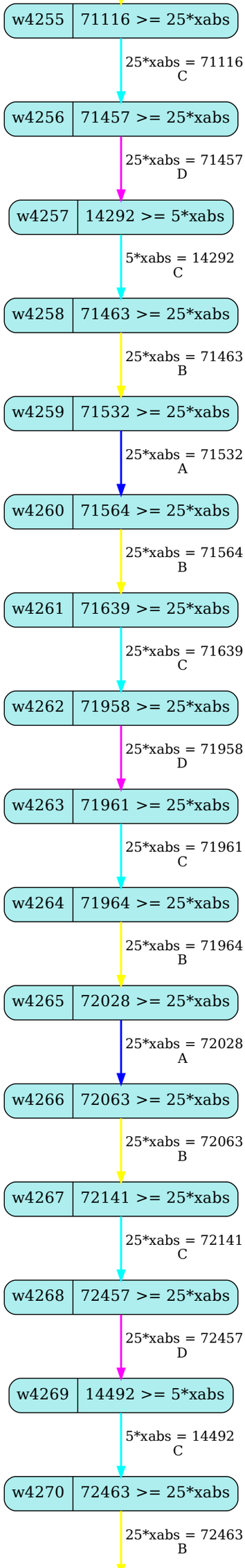
w4255
71116 >= 25*xabs
25*xabs = 71116
C
w4256
71457 >= 25*xabs
25*xabs = 71457
D
w4257
14292 >= 5*xabs
5*xabs = 14292
C
w4258
71463 >= 25*xabs
25*xabs = 71463
B
w4259
71532 >= 25*xabs
25*xabs = 71532
A
w4260
71564 >= 25*xabs
25*xabs = 71564
B
w4261
71639 >= 25*xabs
25*xabs = 71639
C
w4262
71958 >= 25*xabs
25*xabs = 71958
D
w4263
71961 >= 25*xabs
25*xabs = 71961
C
w4264
71964 >= 25*xabs
25*xabs = 71964
B
w4265
72028 >= 25*xabs
25*xabs = 72028
A
w4266
72063 >= 25*xabs
25*xabs = 72063
B
w4267
72141 >= 25*xabs
25*xabs = 72141
C
w4268
72457 >= 25*xabs
25*xabs = 72457
D
w4269
14492 >= 5*xabs
5*xabs = 14492
C
w4270
72463 >= 25*xabs
25*xabs = 72463
B

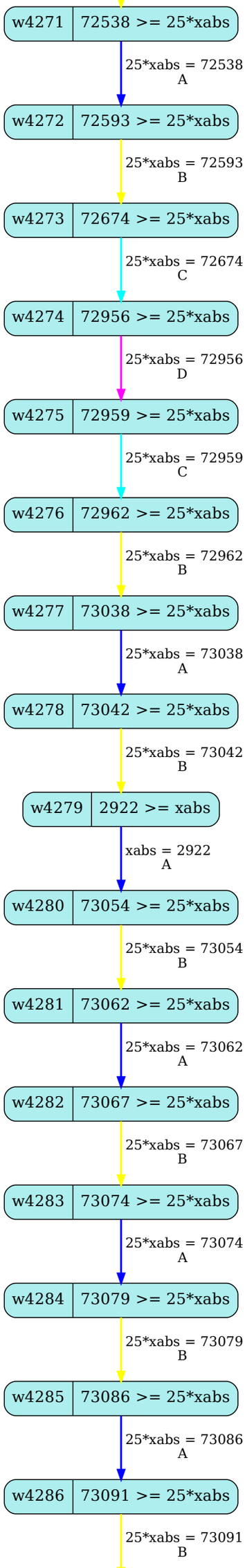
w4271
72538 >= 25*xabs
25*xabs = 72538
A
w4272
72593 >= 25*xabs
25*xabs = 72593
B
w4273
72674 >= 25*xabs
25*xabs = 72674
C
w4274
72956 >= 25*xabs
25*xabs = 72956
D
w4275
72959 >= 25*xabs
25*xabs = 72959
C
w4276
72962 >= 25*xabs
25*xabs = 72962
B
w4277
73038 >= 25*xabs
25*xabs = 73038
A
w4278
73042 >= 25*xabs
25*xabs = 73042
B
w4279
2922 >= xabs
xabs = 2922
A
w4280
73054 >= 25*xabs
25*xabs = 73054
B
w4281
73062 >= 25*xabs
25*xabs = 73062
A
w4282
73067 >= 25*xabs
25*xabs = 73067
B
w4283
73074 >= 25*xabs
25*xabs = 73074
A
w4284
73079 >= 25*xabs
25*xabs = 73079
B
w4285
73086 >= 25*xabs
25*xabs = 73086
A
w4286
73091 >= 25*xabs
25*xabs = 73091
B

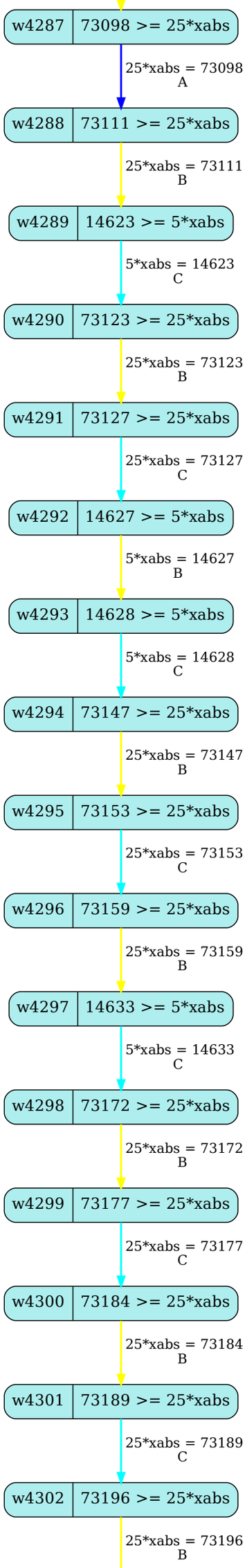
w4287
73098 >= 25*xabs
25*xabs = 73098
A
w4288
73111 >= 25*xabs
25*xabs = 73111
B
w4289
14623 >= 5*xabs
5*xabs = 14623
C
w4290
73123 >= 25*xabs
25*xabs = 73123
B
w4291
73127 >= 25*xabs
25*xabs = 73127
C
w4292
14627 >= 5*xabs
5*xabs = 14627
B
w4293
14628 >= 5*xabs
5*xabs = 14628
C
w4294
73147 >= 25*xabs
25*xabs = 73147
B
w4295
73153 >= 25*xabs
25*xabs = 73153
C
w4296
73159 >= 25*xabs
25*xabs = 73159
B
w4297
14633 >= 5*xabs
5*xabs = 14633
C
w4298
73172 >= 25*xabs
25*xabs = 73172
B
w4299
73177 >= 25*xabs
25*xabs = 73177
C
w4300
73184 >= 25*xabs
25*xabs = 73184
B
w4301
73189 >= 25*xabs
25*xabs = 73189
C
w4302
73196 >= 25*xabs
25*xabs = 73196
B

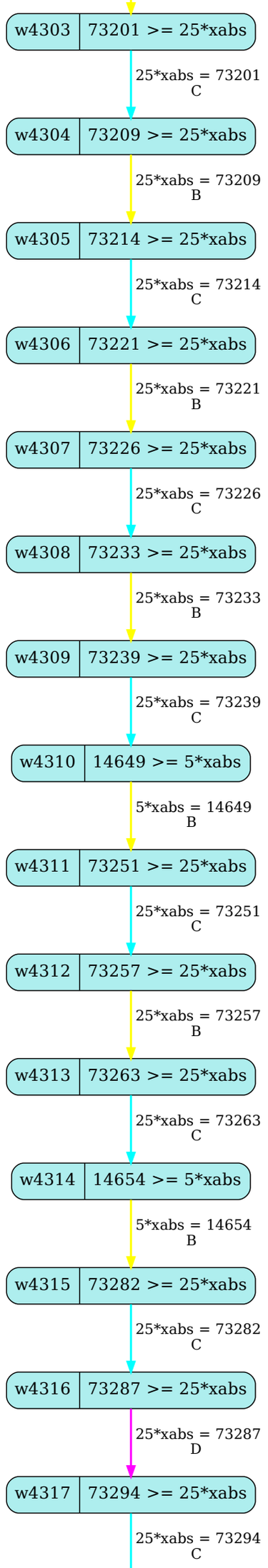
w4303
73201 >= 25*xabs
25*xabs = 73201
C
w4304
73209 >= 25*xabs
25*xabs = 73209
B
w4305
73214 >= 25*xabs
25*xabs = 73214
C
w4306
73221 >= 25*xabs
25*xabs = 73221
B
w4307
73226 >= 25*xabs
25*xabs = 73226
C
w4308
73233 >= 25*xabs
25*xabs = 73233
B
w4309
73239 >= 25*xabs
25*xabs = 73239
C
w4310
14649 >= 5*xabs
5*xabs = 14649
B
w4311
73251 >= 25*xabs
25*xabs = 73251
C
w4312
73257 >= 25*xabs
25*xabs = 73257
B
w4313
73263 >= 25*xabs
25*xabs = 73263
C
w4314
14654 >= 5*xabs
5*xabs = 14654
B
w4315
73282 >= 25*xabs
25*xabs = 73282
C
w4316
73287 >= 25*xabs
25*xabs = 73287
D
w4317
73294 >= 25*xabs
25*xabs = 73294
C

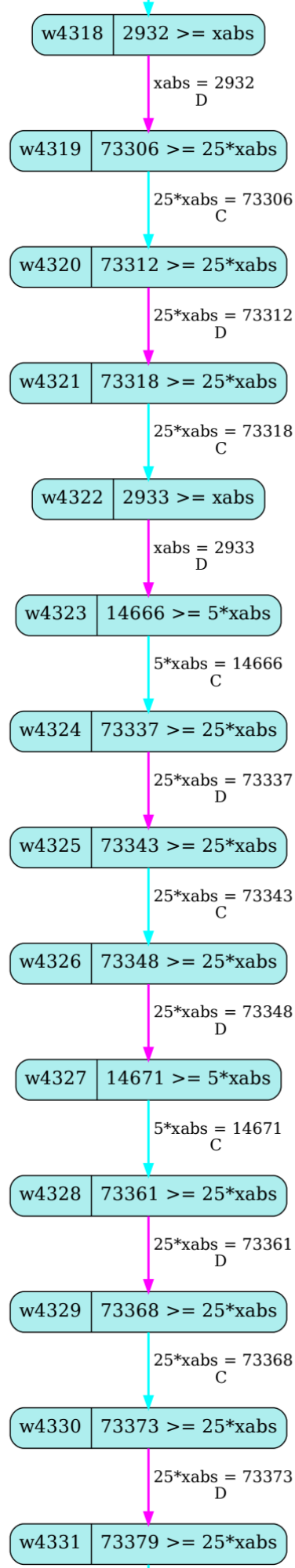
w4318
2932 >= xabs
xabs = 2932
D
w4319
73306 >= 25*xabs
25*xabs = 73306
C
w4320
73312 >= 25*xabs
25*xabs = 73312
D
w4321
73318 >= 25*xabs
25*xabs = 73318
C
w4322
2933 >= xabs
xabs = 2933
D
w4323
14666 >= 5*xabs
5*xabs = 14666
C
w4324
73337 >= 25*xabs
25*xabs = 73337
D
w4325
73343 >= 25*xabs
25*xabs = 73343
C
w4326
73348 >= 25*xabs
25*xabs = 73348
D
w4327
14671 >= 5*xabs
5*xabs = 14671
C
w4328
73361 >= 25*xabs
25*xabs = 73361
D
w4329
73368 >= 25*xabs
25*xabs = 73368
C
w4330
73373 >= 25*xabs
25*xabs = 73373
D
w4331
73379 >= 25*xabs

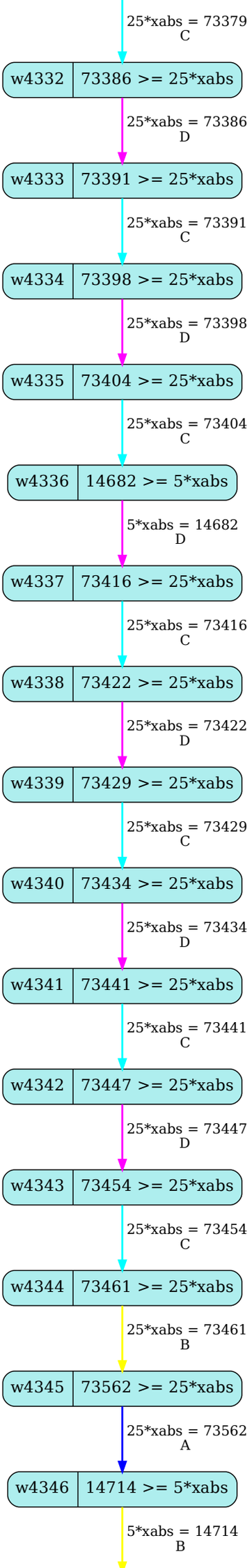
25*xabs = 73379
C
w4332
73386 >= 25*xabs
25*xabs = 73386
D
w4333
73391 >= 25*xabs
25*xabs = 73391
C
w4334
73398 >= 25*xabs
25*xabs = 73398
D
w4335
73404 >= 25*xabs
25*xabs = 73404
C
w4336
14682 >= 5*xabs
5*xabs = 14682
D
w4337
73416 >= 25*xabs
25*xabs = 73416
C
w4338
73422 >= 25*xabs
25*xabs = 73422
D
w4339
73429 >= 25*xabs
25*xabs = 73429
C
w4340
73434 >= 25*xabs
25*xabs = 73434
D
w4341
73441 >= 25*xabs
25*xabs = 73441
C
w4342
73447 >= 25*xabs
25*xabs = 73447
D
w4343
73454 >= 25*xabs
25*xabs = 73454
C
w4344
73461 >= 25*xabs
25*xabs = 73461
B
w4345
73562 >= 25*xabs
25*xabs = 73562
A
w4346
14714 >= 5*xabs
5*xabs = 14714
B

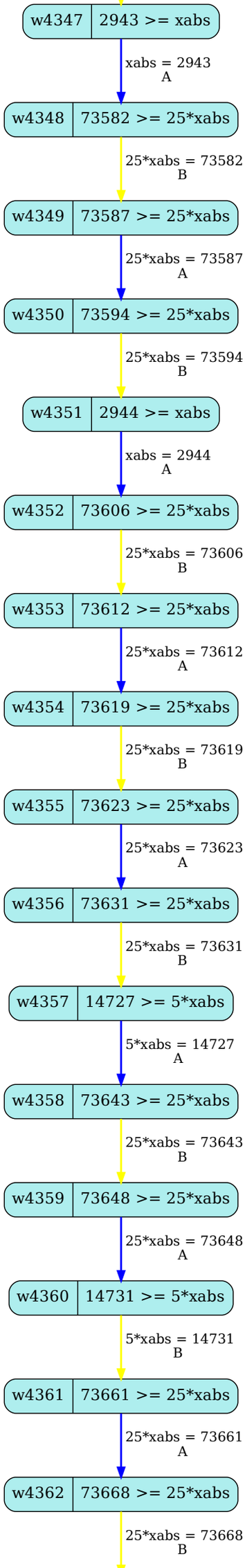
w4347
2943 >= xabs
xabs = 2943
A
w4348
73582 >= 25*xabs
25*xabs = 73582
B
w4349
73587 >= 25*xabs
25*xabs = 73587
A
w4350
73594 >= 25*xabs
25*xabs = 73594
B
w4351
2944 >= xabs
xabs = 2944
A
w4352
73606 >= 25*xabs
25*xabs = 73606
B
w4353
73612 >= 25*xabs
25*xabs = 73612
A
w4354
73619 >= 25*xabs
25*xabs = 73619
B
w4355
73623 >= 25*xabs
25*xabs = 73623
A
w4356
73631 >= 25*xabs
25*xabs = 73631
B
w4357
14727 >= 5*xabs
5*xabs = 14727
A
w4358
73643 >= 25*xabs
25*xabs = 73643
B
w4359
73648 >= 25*xabs
25*xabs = 73648
A
w4360
14731 >= 5*xabs
5*xabs = 14731
B
w4361
73661 >= 25*xabs
25*xabs = 73661
A
w4362
73668 >= 25*xabs
25*xabs = 73668
B

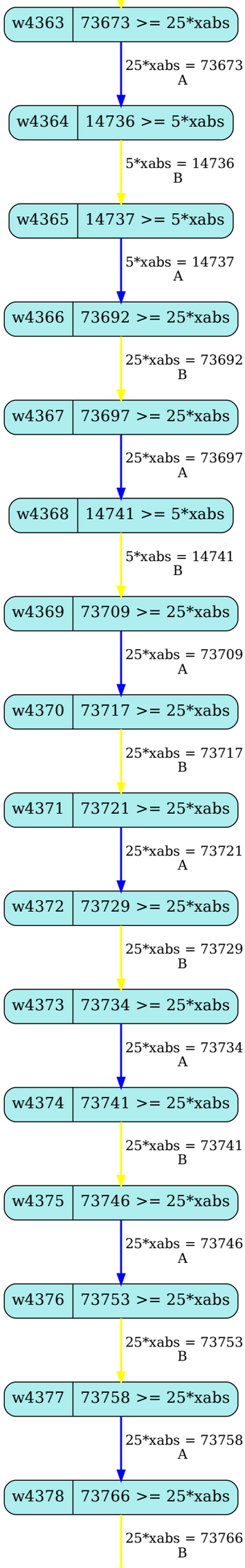
w4363
73673 >= 25*xabs
25*xabs = 73673
A
w4364
14736 >= 5*xabs
5*xabs = 14736
B
w4365
14737 >= 5*xabs
5*xabs = 14737
A
w4366
73692 >= 25*xabs
25*xabs = 73692
B
w4367
73697 >= 25*xabs
25*xabs = 73697
A
w4368
14741 >= 5*xabs
5*xabs = 14741
B
w4369
73709 >= 25*xabs
25*xabs = 73709
A
w4370
73717 >= 25*xabs
25*xabs = 73717
B
w4371
73721 >= 25*xabs
25*xabs = 73721
A
w4372
73729 >= 25*xabs
25*xabs = 73729
B
w4373
73734 >= 25*xabs
25*xabs = 73734
A
w4374
73741 >= 25*xabs
25*xabs = 73741
B
w4375
73746 >= 25*xabs
25*xabs = 73746
A
w4376
73753 >= 25*xabs
25*xabs = 73753
B
w4377
73758 >= 25*xabs
25*xabs = 73758
A
w4378
73766 >= 25*xabs
25*xabs = 73766
B

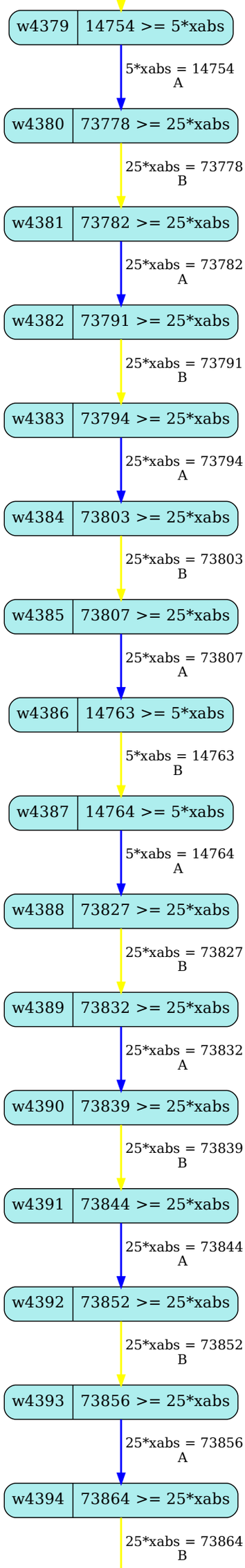
w4379
14754 >= 5*xabs
5*xabs = 14754
A
w4380
73778 >= 25*xabs
25*xabs = 73778
B
w4381
73782 >= 25*xabs
25*xabs = 73782
A
w4382
73791 >= 25*xabs
25*xabs = 73791
B
w4383
73794 >= 25*xabs
25*xabs = 73794
A
w4384
73803 >= 25*xabs
25*xabs = 73803
B
w4385
73807 >= 25*xabs
25*xabs = 73807
A
w4386
14763 >= 5*xabs
5*xabs = 14763
B
w4387
14764 >= 5*xabs
5*xabs = 14764
A
w4388
73827 >= 25*xabs
25*xabs = 73827
B
w4389
73832 >= 25*xabs
25*xabs = 73832
A
w4390
73839 >= 25*xabs
25*xabs = 73839
B
w4391
73844 >= 25*xabs
25*xabs = 73844
A
w4392
73852 >= 25*xabs
25*xabs = 73852
B
w4393
73856 >= 25*xabs
25*xabs = 73856
A
w4394
73864 >= 25*xabs
25*xabs = 73864
B

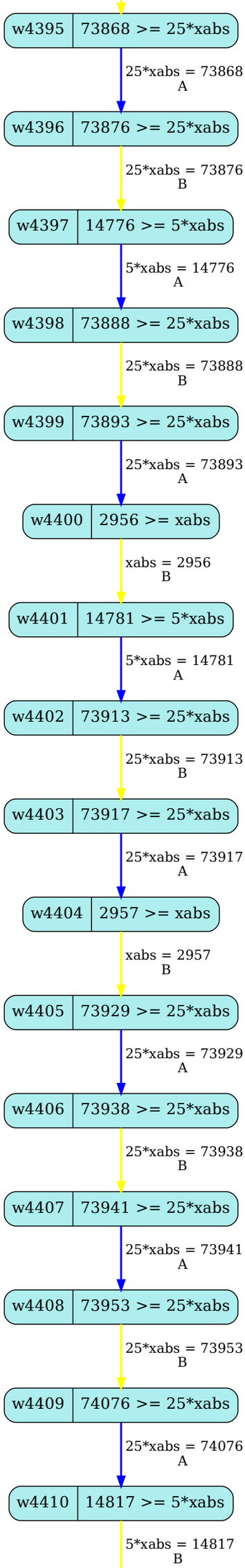
w4395
73868 >= 25*xabs
25*xabs = 73868
A
w4396
73876 >= 25*xabs
25*xabs = 73876
B
w4397
14776 >= 5*xabs
5*xabs = 14776
A
w4398
73888 >= 25*xabs
25*xabs = 73888
B
w4399
73893 >= 25*xabs
25*xabs = 73893
A
w4400
2956 >= xabs
xabs = 2956
B
w4401
14781 >= 5*xabs
5*xabs = 14781
A
w4402
73913 >= 25*xabs
25*xabs = 73913
B
w4403
73917 >= 25*xabs
25*xabs = 73917
A
w4404
2957 >= xabs
xabs = 2957
B
w4405
73929 >= 25*xabs
25*xabs = 73929
A
w4406
73938 >= 25*xabs
25*xabs = 73938
B
w4407
73941 >= 25*xabs
25*xabs = 73941
A
w4408
73953 >= 25*xabs
25*xabs = 73953
B
w4409
74076 >= 25*xabs
25*xabs = 74076
A
w4410
14817 >= 5*xabs
5*xabs = 14817
B

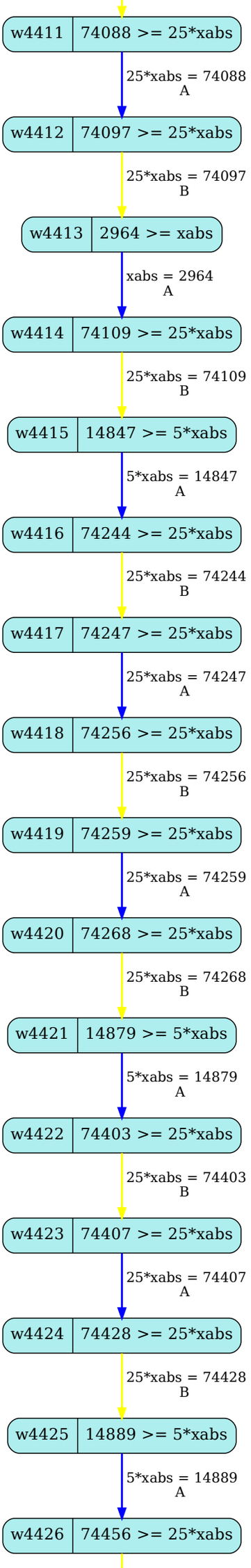
w4411
74088 >= 25*xabs
25*xabs = 74088
A
w4412
74097 >= 25*xabs
25*xabs = 74097
B
w4413
2964 >= xabs
xabs = 2964
A
w4414
74109 >= 25*xabs
25*xabs = 74109
B
w4415
14847 >= 5*xabs
5*xabs = 14847
A
w4416
74244 >= 25*xabs
25*xabs = 74244
B
w4417
74247 >= 25*xabs
25*xabs = 74247
A
w4418
74256 >= 25*xabs
25*xabs = 74256
B
w4419
74259 >= 25*xabs
25*xabs = 74259
A
w4420
74268 >= 25*xabs
25*xabs = 74268
B
w4421
14879 >= 5*xabs
5*xabs = 14879
A
w4422
74403 >= 25*xabs
25*xabs = 74403
B
w4423
74407 >= 25*xabs
25*xabs = 74407
A
w4424
74428 >= 25*xabs
25*xabs = 74428
B
w4425
14889 >= 5*xabs
5*xabs = 14889
A
w4426
74456 >= 25*xabs

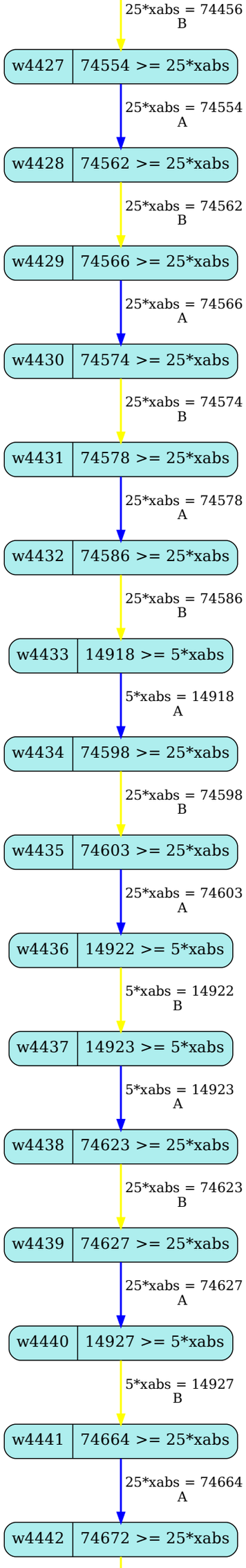
25*xabs = 74456
B
w4427
74554 >= 25*xabs
25*xabs = 74554
A
w4428
74562 >= 25*xabs
25*xabs = 74562
B
w4429
74566 >= 25*xabs
25*xabs = 74566
A
w4430
74574 >= 25*xabs
25*xabs = 74574
B
w4431
74578 >= 25*xabs
25*xabs = 74578
A
w4432
74586 >= 25*xabs
25*xabs = 74586
B
w4433
14918 >= 5*xabs
5*xabs = 14918
A
w4434
74598 >= 25*xabs
25*xabs = 74598
B
w4435
74603 >= 25*xabs
25*xabs = 74603
A
w4436
14922 >= 5*xabs
5*xabs = 14922
B
w4437
14923 >= 5*xabs
5*xabs = 14923
A
w4438
74623 >= 25*xabs
25*xabs = 74623
B
w4439
74627 >= 25*xabs
25*xabs = 74627
A
w4440
14927 >= 5*xabs
5*xabs = 14927
B
w4441
74664 >= 25*xabs
25*xabs = 74664
A
w4442
74672 >= 25*xabs

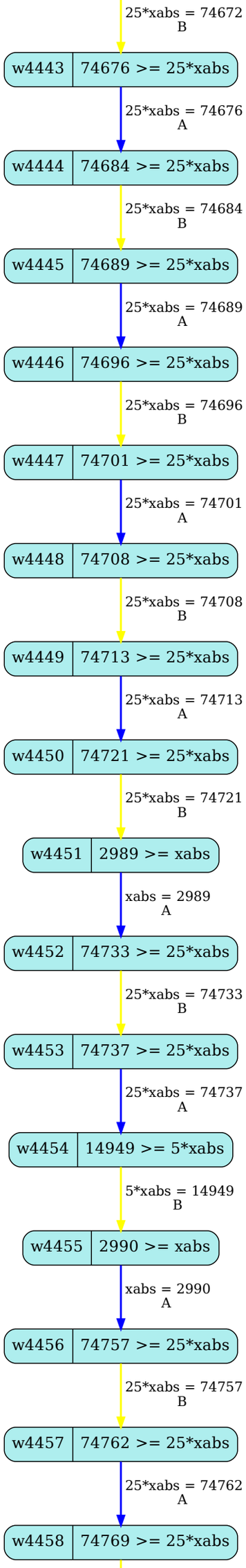
25*xabs = 74672
B
w4443
74676 >= 25*xabs
25*xabs = 74676
A
w4444
74684 >= 25*xabs
25*xabs = 74684
B
w4445
74689 >= 25*xabs
25*xabs = 74689
A
w4446
74696 >= 25*xabs
25*xabs = 74696
B
w4447
74701 >= 25*xabs
25*xabs = 74701
A
w4448
74708 >= 25*xabs
25*xabs = 74708
B
w4449
74713 >= 25*xabs
25*xabs = 74713
A
w4450
74721 >= 25*xabs
25*xabs = 74721
B
w4451
2989 >= xabs
xabs = 2989
A
w4452
74733 >= 25*xabs
25*xabs = 74733
B
w4453
74737 >= 25*xabs
25*xabs = 74737
A
w4454
14949 >= 5*xabs
5*xabs = 14949
B
w4455
2990 >= xabs
xabs = 2990
A
w4456
74757 >= 25*xabs
25*xabs = 74757
B
w4457
74762 >= 25*xabs
25*xabs = 74762
A
w4458
74769 >= 25*xabs

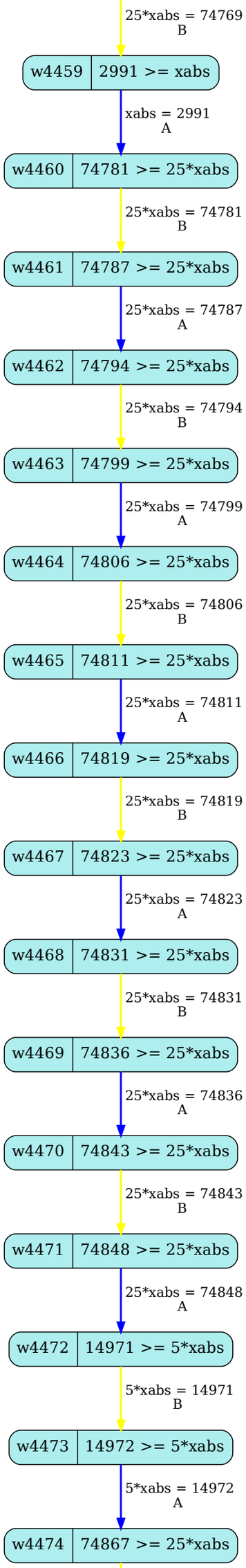
25*xabs = 74769
B
w4459
2991 >= xabs
xabs = 2991
A
w4460
74781 >= 25*xabs
25*xabs = 74781
B
w4461
74787 >= 25*xabs
25*xabs = 74787
A
w4462
74794 >= 25*xabs
25*xabs = 74794
B
w4463
74799 >= 25*xabs
25*xabs = 74799
A
w4464
74806 >= 25*xabs
25*xabs = 74806
B
w4465
74811 >= 25*xabs
25*xabs = 74811
A
w4466
74819 >= 25*xabs
25*xabs = 74819
B
w4467
74823 >= 25*xabs
25*xabs = 74823
A
w4468
74831 >= 25*xabs
25*xabs = 74831
B
w4469
74836 >= 25*xabs
25*xabs = 74836
A
w4470
74843 >= 25*xabs
25*xabs = 74843
B
w4471
74848 >= 25*xabs
25*xabs = 74848
A
w4472
14971 >= 5*xabs
5*xabs = 14971
B
w4473
14972 >= 5*xabs
5*xabs = 14972
A
w4474
74867 >= 25*xabs

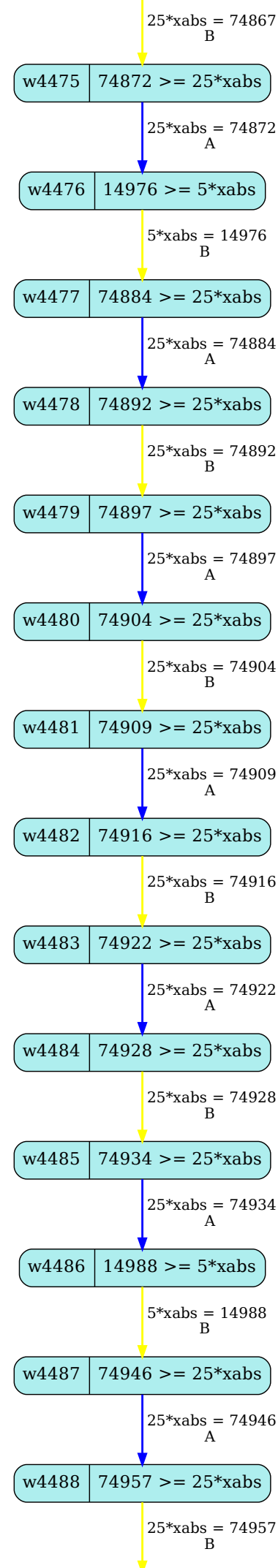
25*xabs = 74867
B
w4475
74872 >= 25*xabs
25*xabs = 74872
A
w4476
14976 >= 5*xabs
5*xabs = 14976
B
w4477
74884 >= 25*xabs
25*xabs = 74884
A
w4478
74892 >= 25*xabs
25*xabs = 74892
B
w4479
74897 >= 25*xabs
25*xabs = 74897
A
w4480
74904 >= 25*xabs
25*xabs = 74904
B
w4481
74909 >= 25*xabs
25*xabs = 74909
A
w4482
74916 >= 25*xabs
25*xabs = 74916
B
w4483
74922 >= 25*xabs
25*xabs = 74922
A
w4484
74928 >= 25*xabs
25*xabs = 74928
B
w4485
74934 >= 25*xabs
25*xabs = 74934
A
w4486
14988 >= 5*xabs
5*xabs = 14988
B
w4487
74946 >= 25*xabs
25*xabs = 74946
A
w4488
74957 >= 25*xabs
25*xabs = 74957
B

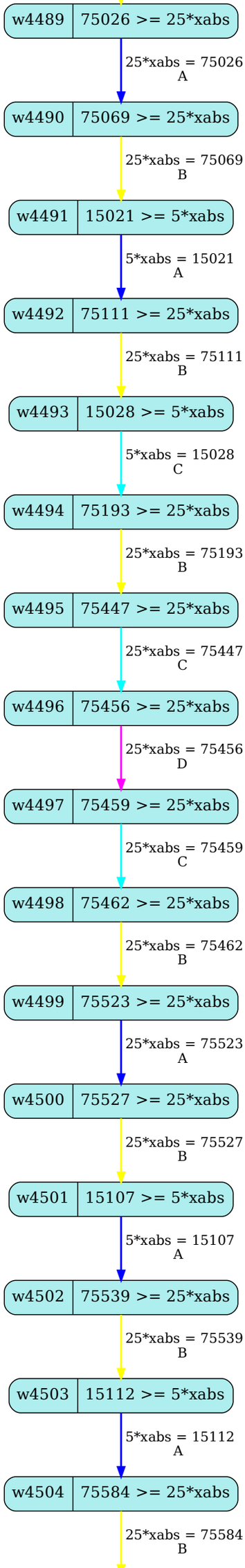
w4489
75026 >= 25*xabs
25*xabs = 75026
A
w4490
75069 >= 25*xabs
25*xabs = 75069
B
w4491
15021 >= 5*xabs
5*xabs = 15021
A
w4492
75111 >= 25*xabs
25*xabs = 75111
B
w4493
15028 >= 5*xabs
5*xabs = 15028
C
w4494
75193 >= 25*xabs
25*xabs = 75193
B
w4495
75447 >= 25*xabs
25*xabs = 75447
C
w4496
75456 >= 25*xabs
25*xabs = 75456
D
w4497
75459 >= 25*xabs
25*xabs = 75459
C
w4498
75462 >= 25*xabs
25*xabs = 75462
B
w4499
75523 >= 25*xabs
25*xabs = 75523
A
w4500
75527 >= 25*xabs
25*xabs = 75527
B
w4501
15107 >= 5*xabs
5*xabs = 15107
A
w4502
75539 >= 25*xabs
25*xabs = 75539
B
w4503
15112 >= 5*xabs
5*xabs = 15112
A
w4504
75584 >= 25*xabs
25*xabs = 75584
B

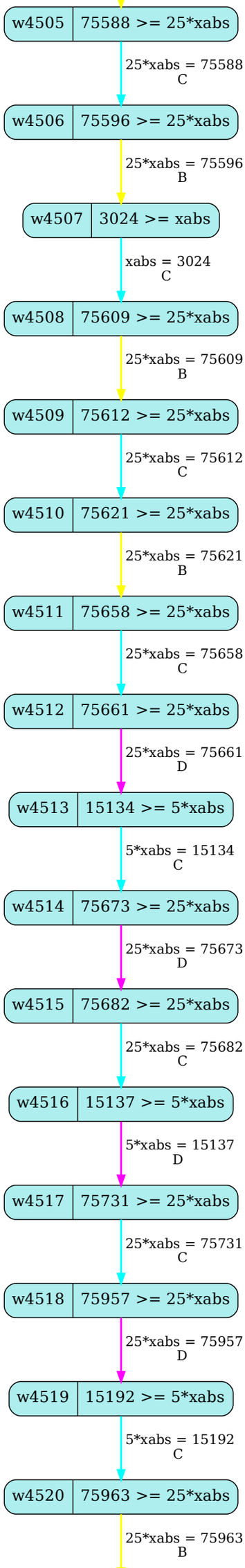
w4505
75588 >= 25*xabs
25*xabs = 75588
C
w4506
75596 >= 25*xabs
25*xabs = 75596
B
w4507
3024 >= xabs
xabs = 3024
C
w4508
75609 >= 25*xabs
25*xabs = 75609
B
w4509
75612 >= 25*xabs
25*xabs = 75612
C
w4510
75621 >= 25*xabs
25*xabs = 75621
B
w4511
75658 >= 25*xabs
25*xabs = 75658
C
w4512
75661 >= 25*xabs
25*xabs = 75661
D
w4513
15134 >= 5*xabs
5*xabs = 15134
C
w4514
75673 >= 25*xabs
25*xabs = 75673
D
w4515
75682 >= 25*xabs
25*xabs = 75682
C
w4516
15137 >= 5*xabs
5*xabs = 15137
D
w4517
75731 >= 25*xabs
25*xabs = 75731
C
w4518
75957 >= 25*xabs
25*xabs = 75957
D
w4519
15192 >= 5*xabs
5*xabs = 15192
C
w4520
75963 >= 25*xabs
25*xabs = 75963
B

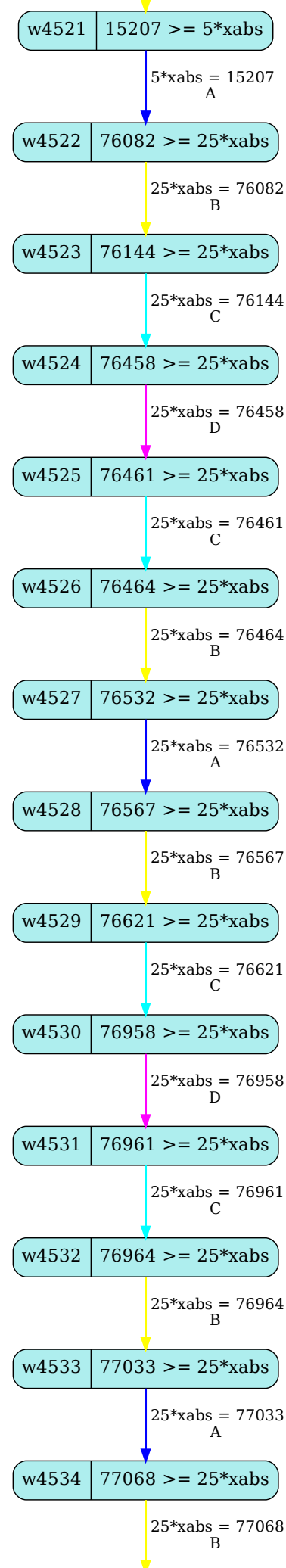
w4521
15207 >= 5*xabs
5*xabs = 15207
A
w4522
76082 >= 25*xabs
25*xabs = 76082
B
w4523
76144 >= 25*xabs
25*xabs = 76144
C
w4524
76458 >= 25*xabs
25*xabs = 76458
D
w4525
76461 >= 25*xabs
25*xabs = 76461
C
w4526
76464 >= 25*xabs
25*xabs = 76464
B
w4527
76532 >= 25*xabs
25*xabs = 76532
A
w4528
76567 >= 25*xabs
25*xabs = 76567
B
w4529
76621 >= 25*xabs
25*xabs = 76621
C
w4530
76958 >= 25*xabs
25*xabs = 76958
D
w4531
76961 >= 25*xabs
25*xabs = 76961
C
w4532
76964 >= 25*xabs
25*xabs = 76964
B
w4533
77033 >= 25*xabs
25*xabs = 77033
A
w4534
77068 >= 25*xabs
25*xabs = 77068
B

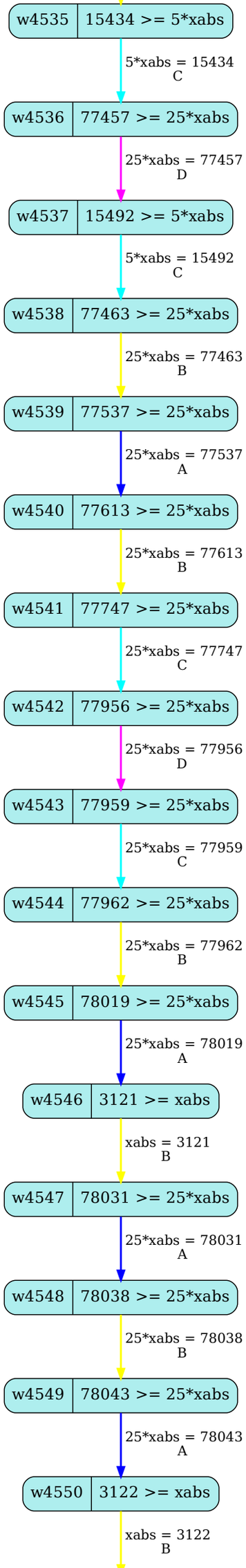
w4535
15434 >= 5*xabs
5*xabs = 15434
C
w4536
77457 >= 25*xabs
25*xabs = 77457
D
w4537
15492 >= 5*xabs
5*xabs = 15492
C
w4538
77463 >= 25*xabs
25*xabs = 77463
B
w4539
77537 >= 25*xabs
25*xabs = 77537
A
w4540
77613 >= 25*xabs
25*xabs = 77613
B
w4541
77747 >= 25*xabs
25*xabs = 77747
C
w4542
77956 >= 25*xabs
25*xabs = 77956
D
w4543
77959 >= 25*xabs
25*xabs = 77959
C
w4544
77962 >= 25*xabs
25*xabs = 77962
B
w4545
78019 >= 25*xabs
25*xabs = 78019
A
w4546
3121 >= xabs
xabs = 3121
B
w4547
78031 >= 25*xabs
25*xabs = 78031
A
w4548
78038 >= 25*xabs
25*xabs = 78038
B
w4549
78043 >= 25*xabs
25*xabs = 78043
A
w4550
3122 >= xabs
xabs = 3122
B

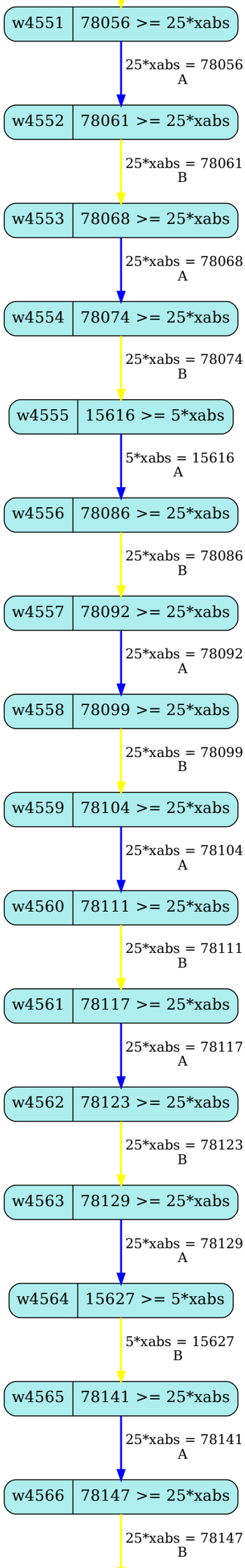
w4551
78056 >= 25*xabs
25*xabs = 78056
A
w4552
78061 >= 25*xabs
25*xabs = 78061
B
w4553
78068 >= 25*xabs
25*xabs = 78068
A
w4554
78074 >= 25*xabs
25*xabs = 78074
B
w4555
15616 >= 5*xabs
5*xabs = 15616
A
w4556
78086 >= 25*xabs
25*xabs = 78086
B
w4557
78092 >= 25*xabs
25*xabs = 78092
A
w4558
78099 >= 25*xabs
25*xabs = 78099
B
w4559
78104 >= 25*xabs
25*xabs = 78104
A
w4560
78111 >= 25*xabs
25*xabs = 78111
B
w4561
78117 >= 25*xabs
25*xabs = 78117
A
w4562
78123 >= 25*xabs
25*xabs = 78123
B
w4563
78129 >= 25*xabs
25*xabs = 78129
A
w4564
15627 >= 5*xabs
5*xabs = 15627
B
w4565
78141 >= 25*xabs
25*xabs = 78141
A
w4566
78147 >= 25*xabs
25*xabs = 78147
B

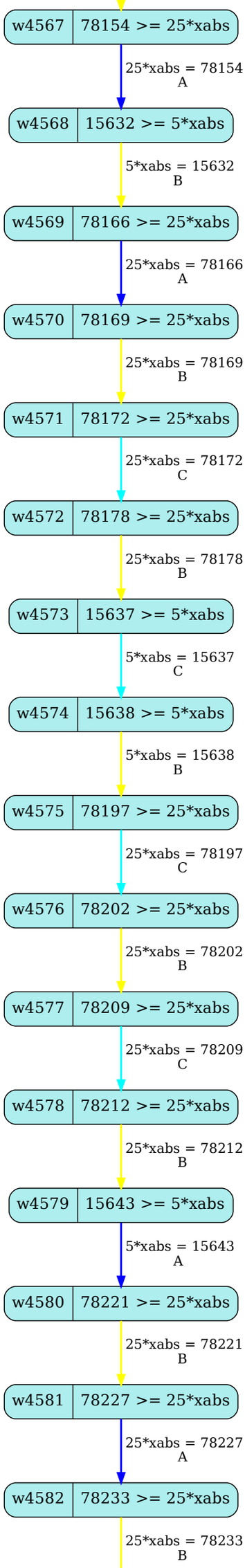
w4567
78154 >= 25*xabs
25*xabs = 78154
A
w4568
15632 >= 5*xabs
5*xabs = 15632
B
w4569
78166 >= 25*xabs
25*xabs = 78166
A
w4570
78169 >= 25*xabs
25*xabs = 78169
B
w4571
78172 >= 25*xabs
25*xabs = 78172
C
w4572
78178 >= 25*xabs
25*xabs = 78178
B
w4573
15637 >= 5*xabs
5*xabs = 15637
C
w4574
15638 >= 5*xabs
5*xabs = 15638
B
w4575
78197 >= 25*xabs
25*xabs = 78197
C
w4576
78202 >= 25*xabs
25*xabs = 78202
B
w4577
78209 >= 25*xabs
25*xabs = 78209
C
w4578
78212 >= 25*xabs
25*xabs = 78212
B
w4579
15643 >= 5*xabs
5*xabs = 15643
A
w4580
78221 >= 25*xabs
25*xabs = 78221
B
w4581
78227 >= 25*xabs
25*xabs = 78227
A
w4582
78233 >= 25*xabs
25*xabs = 78233
B

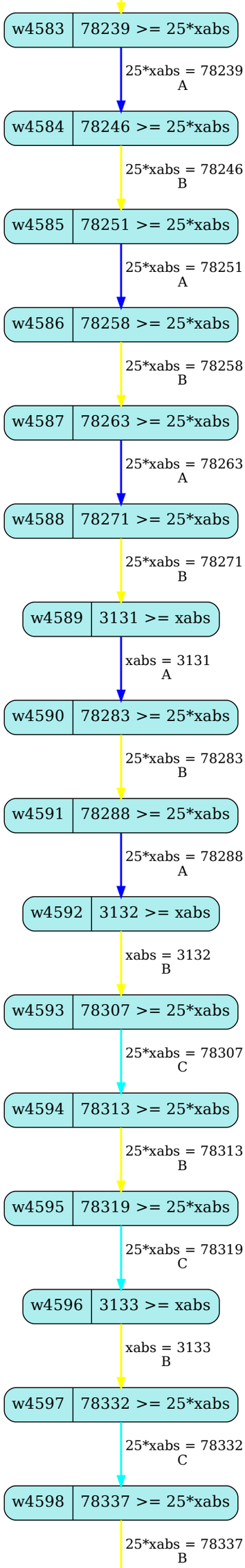
w4583
78239 >= 25*xabs
25*xabs = 78239
A
w4584
78246 >= 25*xabs
25*xabs = 78246
B
w4585
78251 >= 25*xabs
25*xabs = 78251
A
w4586
78258 >= 25*xabs
25*xabs = 78258
B
w4587
78263 >= 25*xabs
25*xabs = 78263
A
w4588
78271 >= 25*xabs
25*xabs = 78271
B
w4589
3131 >= xabs
xabs = 3131
A
w4590
78283 >= 25*xabs
25*xabs = 78283
B
w4591
78288 >= 25*xabs
25*xabs = 78288
A
w4592
3132 >= xabs
xabs = 3132
B
w4593
78307 >= 25*xabs
25*xabs = 78307
C
w4594
78313 >= 25*xabs
25*xabs = 78313
B
w4595
78319 >= 25*xabs
25*xabs = 78319
C
w4596
3133 >= xabs
xabs = 3133
B
w4597
78332 >= 25*xabs
25*xabs = 78332
C
w4598
78337 >= 25*xabs
25*xabs = 78337
B

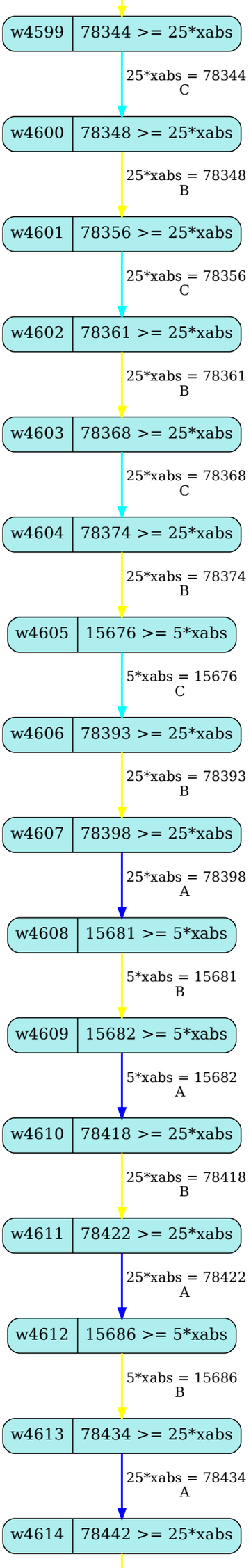
w4599
78344 >= 25*xabs
25*xabs = 78344
C
w4600
78348 >= 25*xabs
25*xabs = 78348
B
w4601
78356 >= 25*xabs
25*xabs = 78356
C
w4602
78361 >= 25*xabs
25*xabs = 78361
B
w4603
78368 >= 25*xabs
25*xabs = 78368
C
w4604
78374 >= 25*xabs
25*xabs = 78374
B
w4605
15676 >= 5*xabs
5*xabs = 15676
C
w4606
78393 >= 25*xabs
25*xabs = 78393
B
w4607
78398 >= 25*xabs
25*xabs = 78398
A
w4608
15681 >= 5*xabs
5*xabs = 15681
B
w4609
15682 >= 5*xabs
5*xabs = 15682
A
w4610
78418 >= 25*xabs
25*xabs = 78418
B
w4611
78422 >= 25*xabs
25*xabs = 78422
A
w4612
15686 >= 5*xabs
5*xabs = 15686
B
w4613
78434 >= 25*xabs
25*xabs = 78434
A
w4614
78442 >= 25*xabs

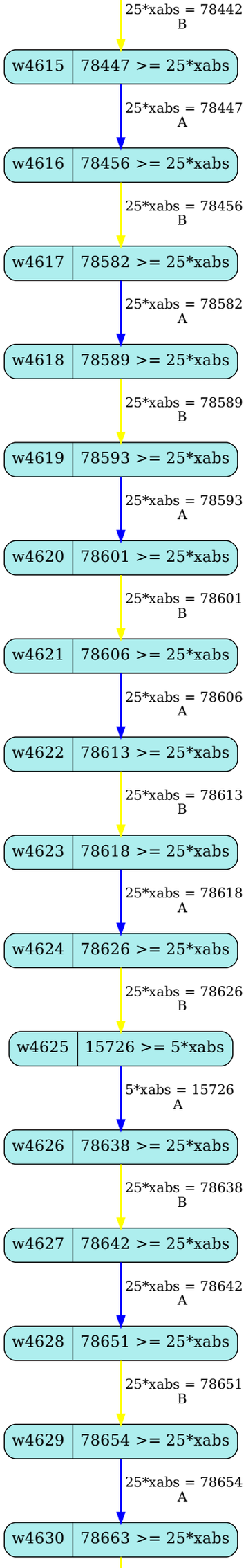
25*xabs = 78442
B
w4615
78447 >= 25*xabs
25*xabs = 78447
A
w4616
78456 >= 25*xabs
25*xabs = 78456
B
w4617
78582 >= 25*xabs
25*xabs = 78582
A
w4618
78589 >= 25*xabs
25*xabs = 78589
B
w4619
78593 >= 25*xabs
25*xabs = 78593
A
w4620
78601 >= 25*xabs
25*xabs = 78601
B
w4621
78606 >= 25*xabs
25*xabs = 78606
A
w4622
78613 >= 25*xabs
25*xabs = 78613
B
w4623
78618 >= 25*xabs
25*xabs = 78618
A
w4624
78626 >= 25*xabs
25*xabs = 78626
B
w4625
15726 >= 5*xabs
5*xabs = 15726
A
w4626
78638 >= 25*xabs
25*xabs = 78638
B
w4627
78642 >= 25*xabs
25*xabs = 78642
A
w4628
78651 >= 25*xabs
25*xabs = 78651
B
w4629
78654 >= 25*xabs
25*xabs = 78654
A
w4630
78663 >= 25*xabs

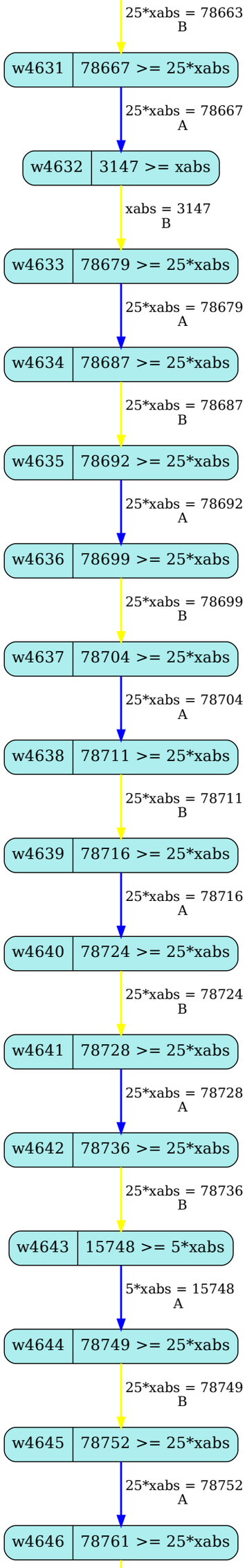
25*xabs = 78663
B
w4631
78667 >= 25*xabs
25*xabs = 78667
A
w4632
3147 >= xabs
xabs = 3147
B
w4633
78679 >= 25*xabs
25*xabs = 78679
A
w4634
78687 >= 25*xabs
25*xabs = 78687
B
w4635
78692 >= 25*xabs
25*xabs = 78692
A
w4636
78699 >= 25*xabs
25*xabs = 78699
B
w4637
78704 >= 25*xabs
25*xabs = 78704
A
w4638
78711 >= 25*xabs
25*xabs = 78711
B
w4639
78716 >= 25*xabs
25*xabs = 78716
A
w4640
78724 >= 25*xabs
25*xabs = 78724
B
w4641
78728 >= 25*xabs
25*xabs = 78728
A
w4642
78736 >= 25*xabs
25*xabs = 78736
B
w4643
15748 >= 5*xabs
5*xabs = 15748
A
w4644
78749 >= 25*xabs
25*xabs = 78749
B
w4645
78752 >= 25*xabs
25*xabs = 78752
A
w4646
78761 >= 25*xabs

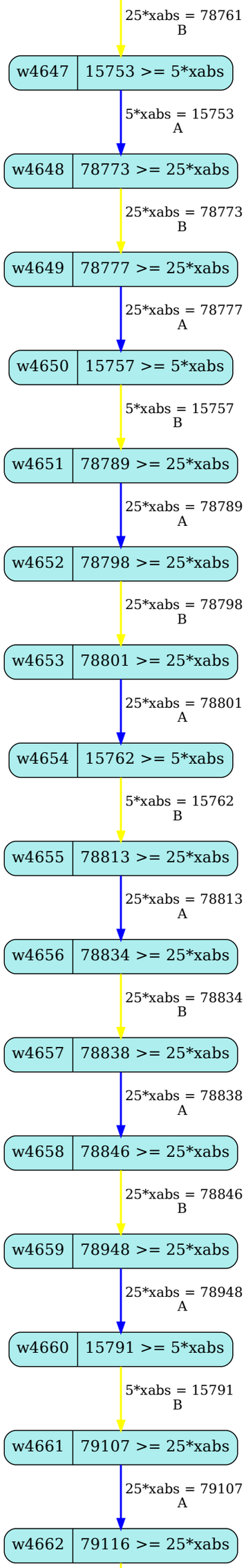
25*xabs = 78761
B
w4647
15753 >= 5*xabs
5*xabs = 15753
A
w4648
78773 >= 25*xabs
25*xabs = 78773
B
w4649
78777 >= 25*xabs
25*xabs = 78777
A
w4650
15757 >= 5*xabs
5*xabs = 15757
B
w4651
78789 >= 25*xabs
25*xabs = 78789
A
w4652
78798 >= 25*xabs
25*xabs = 78798
B
w4653
78801 >= 25*xabs
25*xabs = 78801
A
w4654
15762 >= 5*xabs
5*xabs = 15762
B
w4655
78813 >= 25*xabs
25*xabs = 78813
A
w4656
78834 >= 25*xabs
25*xabs = 78834
B
w4657
78838 >= 25*xabs
25*xabs = 78838
A
w4658
78846 >= 25*xabs
25*xabs = 78846
B
w4659
78948 >= 25*xabs
25*xabs = 78948
A
w4660
15791 >= 5*xabs
5*xabs = 15791
B
w4661
79107 >= 25*xabs
25*xabs = 79107
A
w4662
79116 >= 25*xabs

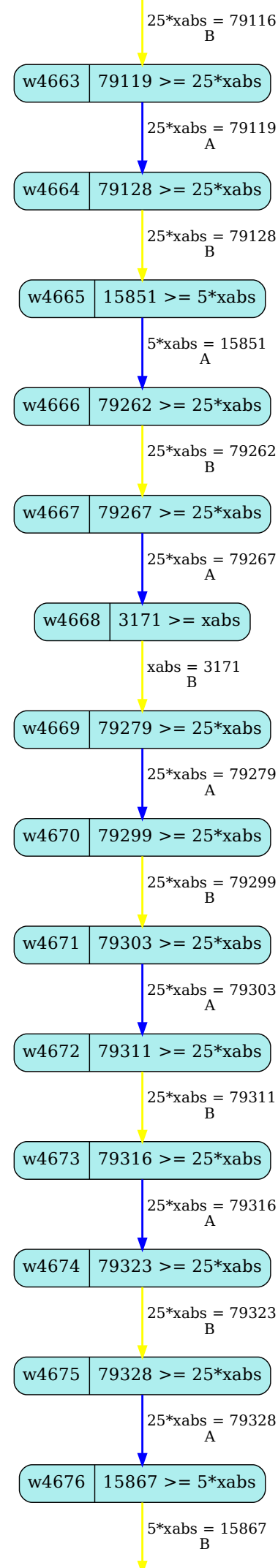
25*xabs = 79116
B
w4663
79119 >= 25*xabs
25*xabs = 79119
A
w4664
79128 >= 25*xabs
25*xabs = 79128
B
w4665
15851 >= 5*xabs
5*xabs = 15851
A
w4666
79262 >= 25*xabs
25*xabs = 79262
B
w4667
79267 >= 25*xabs
25*xabs = 79267
A
w4668
3171 >= xabs
xabs = 3171
B
w4669
79279 >= 25*xabs
25*xabs = 79279
A
w4670
79299 >= 25*xabs
25*xabs = 79299
B
w4671
79303 >= 25*xabs
25*xabs = 79303
A
w4672
79311 >= 25*xabs
25*xabs = 79311
B
w4673
79316 >= 25*xabs
25*xabs = 79316
A
w4674
79323 >= 25*xabs
25*xabs = 79323
B
w4675
79328 >= 25*xabs
25*xabs = 79328
A
w4676
15867 >= 5*xabs
5*xabs = 15867
B

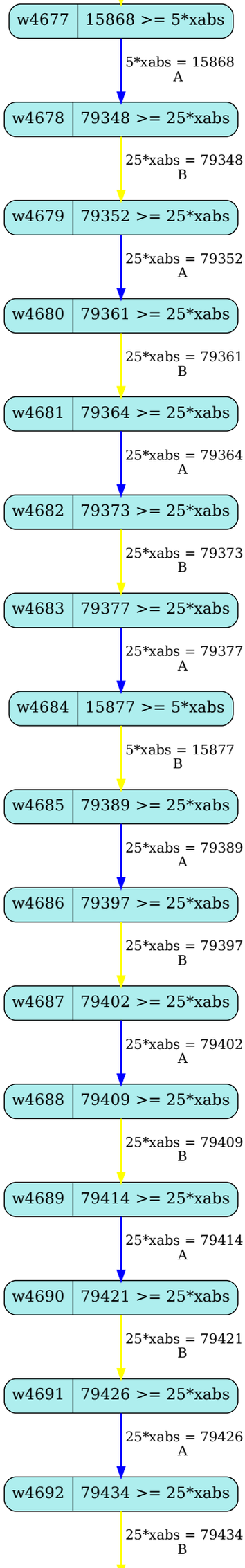
w4677
15868 >= 5*xabs
5*xabs = 15868
A
w4678
79348 >= 25*xabs
25*xabs = 79348
B
w4679
79352 >= 25*xabs
25*xabs = 79352
A
w4680
79361 >= 25*xabs
25*xabs = 79361
B
w4681
79364 >= 25*xabs
25*xabs = 79364
A
w4682
79373 >= 25*xabs
25*xabs = 79373
B
w4683
79377 >= 25*xabs
25*xabs = 79377
A
w4684
15877 >= 5*xabs
5*xabs = 15877
B
w4685
79389 >= 25*xabs
25*xabs = 79389
A
w4686
79397 >= 25*xabs
25*xabs = 79397
B
w4687
79402 >= 25*xabs
25*xabs = 79402
A
w4688
79409 >= 25*xabs
25*xabs = 79409
B
w4689
79414 >= 25*xabs
25*xabs = 79414
A
w4690
79421 >= 25*xabs
25*xabs = 79421
B
w4691
79426 >= 25*xabs
25*xabs = 79426
A
w4692
79434 >= 25*xabs
25*xabs = 79434
B

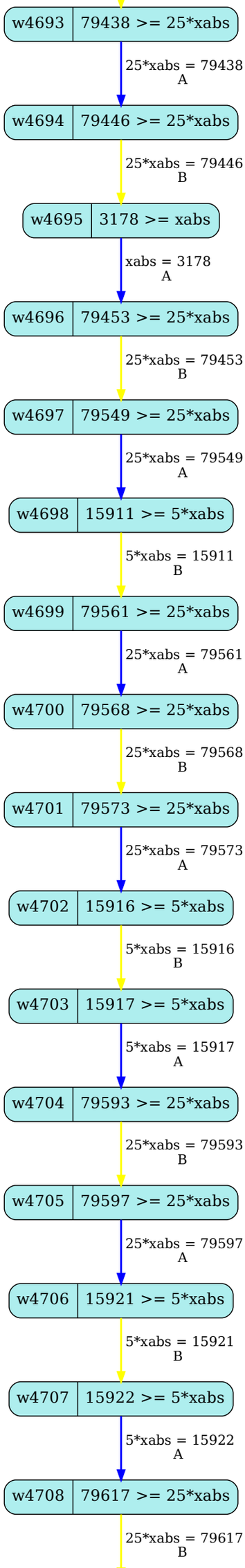
w4693
79438 >= 25*xabs
25*xabs = 79438
A
w4694
79446 >= 25*xabs
25*xabs = 79446
B
w4695
3178 >= xabs
xabs = 3178
A
w4696
79453 >= 25*xabs
25*xabs = 79453
B
w4697
79549 >= 25*xabs
25*xabs = 79549
A
w4698
15911 >= 5*xabs
5*xabs = 15911
B
w4699
79561 >= 25*xabs
25*xabs = 79561
A
w4700
79568 >= 25*xabs
25*xabs = 79568
B
w4701
79573 >= 25*xabs
25*xabs = 79573
A
w4702
15916 >= 5*xabs
5*xabs = 15916
B
w4703
15917 >= 5*xabs
5*xabs = 15917
A
w4704
79593 >= 25*xabs
25*xabs = 79593
B
w4705
79597 >= 25*xabs
25*xabs = 79597
A
w4706
15921 >= 5*xabs
5*xabs = 15921
B
w4707
15922 >= 5*xabs
5*xabs = 15922
A
w4708
79617 >= 25*xabs
25*xabs = 79617
B

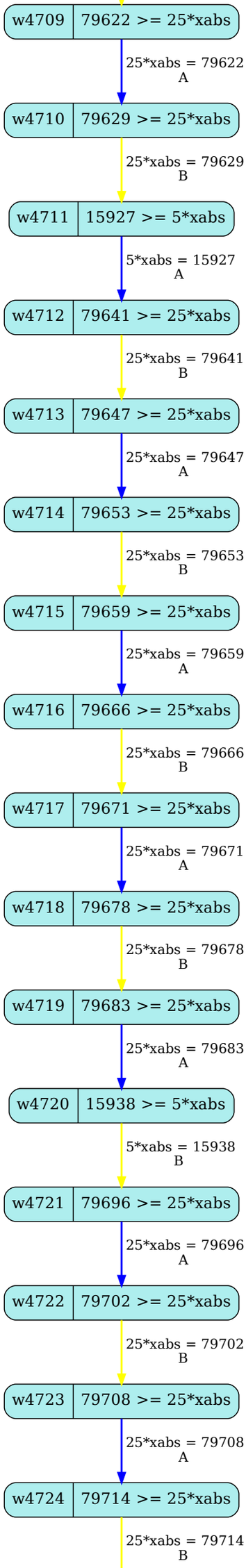
w4709
79622 >= 25*xabs
25*xabs = 79622
A
w4710
79629 >= 25*xabs
25*xabs = 79629
B
w4711
15927 >= 5*xabs
5*xabs = 15927
A
w4712
79641 >= 25*xabs
25*xabs = 79641
B
w4713
79647 >= 25*xabs
25*xabs = 79647
A
w4714
79653 >= 25*xabs
25*xabs = 79653
B
w4715
79659 >= 25*xabs
25*xabs = 79659
A
w4716
79666 >= 25*xabs
25*xabs = 79666
B
w4717
79671 >= 25*xabs
25*xabs = 79671
A
w4718
79678 >= 25*xabs
25*xabs = 79678
B
w4719
79683 >= 25*xabs
25*xabs = 79683
A
w4720
15938 >= 5*xabs
5*xabs = 15938
B
w4721
79696 >= 25*xabs
25*xabs = 79696
A
w4722
79702 >= 25*xabs
25*xabs = 79702
B
w4723
79708 >= 25*xabs
25*xabs = 79708
A
w4724
79714 >= 25*xabs
25*xabs = 79714
B

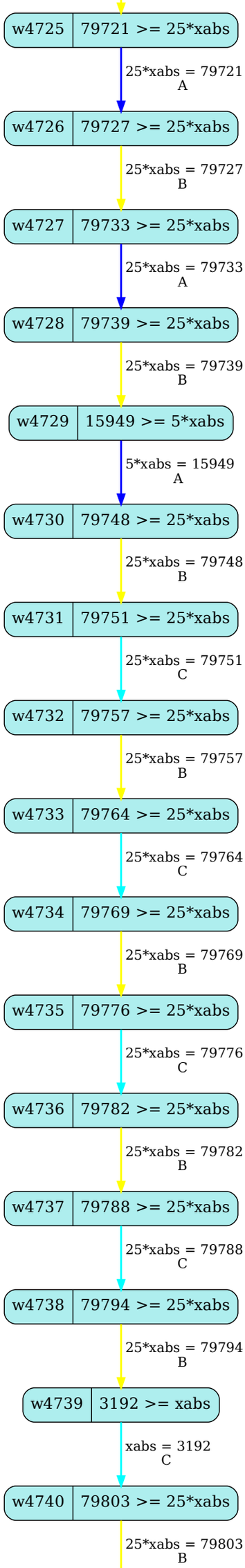
w4725
79721 >= 25*xabs
25*xabs = 79721
A
w4726
79727 >= 25*xabs
25*xabs = 79727
B
w4727
79733 >= 25*xabs
25*xabs = 79733
A
w4728
79739 >= 25*xabs
25*xabs = 79739
B
w4729
15949 >= 5*xabs
5*xabs = 15949
A
w4730
79748 >= 25*xabs
25*xabs = 79748
B
w4731
79751 >= 25*xabs
25*xabs = 79751
C
w4732
79757 >= 25*xabs
25*xabs = 79757
B
w4733
79764 >= 25*xabs
25*xabs = 79764
C
w4734
79769 >= 25*xabs
25*xabs = 79769
B
w4735
79776 >= 25*xabs
25*xabs = 79776
C
w4736
79782 >= 25*xabs
25*xabs = 79782
B
w4737
79788 >= 25*xabs
25*xabs = 79788
C
w4738
79794 >= 25*xabs
25*xabs = 79794
B
w4739
3192 >= xabs
xabs = 3192
C
w4740
79803 >= 25*xabs
25*xabs = 79803
B

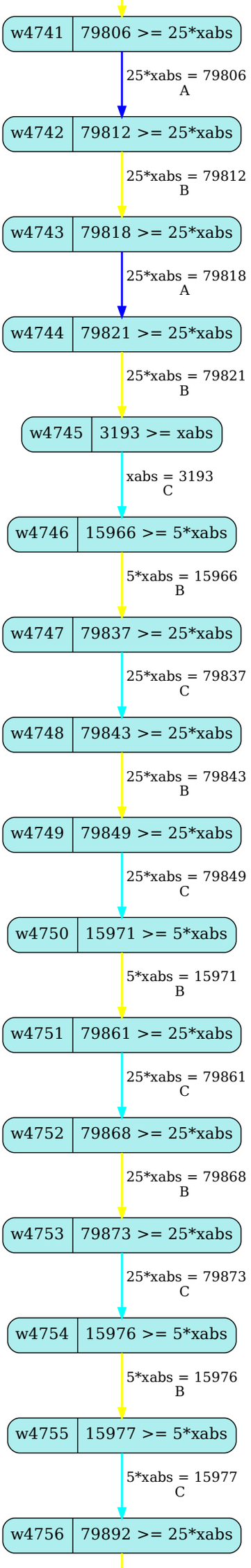
w4741
79806 >= 25*xabs
25*xabs = 79806
A
w4742
79812 >= 25*xabs
25*xabs = 79812
B
w4743
79818 >= 25*xabs
25*xabs = 79818
A
w4744
79821 >= 25*xabs
25*xabs = 79821
B
w4745
3193 >= xabs
xabs = 3193
C
w4746
15966 >= 5*xabs
5*xabs = 15966
B
w4747
79837 >= 25*xabs
25*xabs = 79837
C
w4748
79843 >= 25*xabs
25*xabs = 79843
B
w4749
79849 >= 25*xabs
25*xabs = 79849
C
w4750
15971 >= 5*xabs
5*xabs = 15971
B
w4751
79861 >= 25*xabs
25*xabs = 79861
C
w4752
79868 >= 25*xabs
25*xabs = 79868
B
w4753
79873 >= 25*xabs
25*xabs = 79873
C
w4754
15976 >= 5*xabs
5*xabs = 15976
B
w4755
15977 >= 5*xabs
5*xabs = 15977
C
w4756
79892 >= 25*xabs

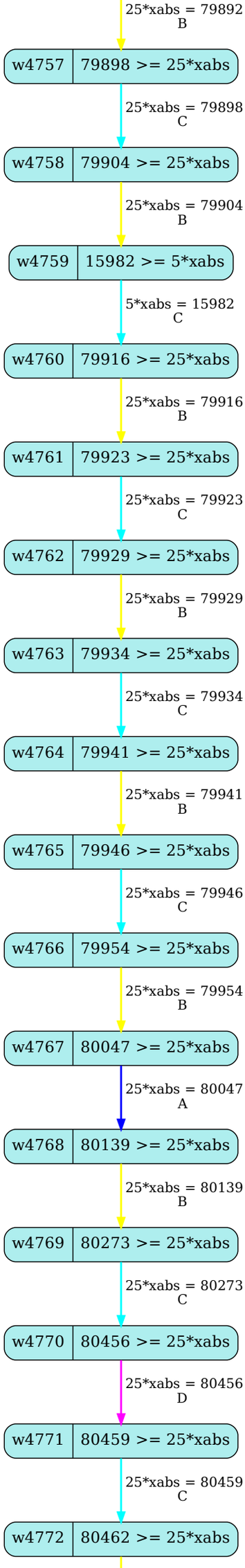
25*xabs = 79892
B
w4757
79898 >= 25*xabs
25*xabs = 79898
C
w4758
79904 >= 25*xabs
25*xabs = 79904
B
w4759
15982 >= 5*xabs
5*xabs = 15982
C
w4760
79916 >= 25*xabs
25*xabs = 79916
B
w4761
79923 >= 25*xabs
25*xabs = 79923
C
w4762
79929 >= 25*xabs
25*xabs = 79929
B
w4763
79934 >= 25*xabs
25*xabs = 79934
C
w4764
79941 >= 25*xabs
25*xabs = 79941
B
w4765
79946 >= 25*xabs
25*xabs = 79946
C
w4766
79954 >= 25*xabs
25*xabs = 79954
B
w4767
80047 >= 25*xabs
25*xabs = 80047
A
w4768
80139 >= 25*xabs
25*xabs = 80139
B
w4769
80273 >= 25*xabs
25*xabs = 80273
C
w4770
80456 >= 25*xabs
25*xabs = 80456
D
w4771
80459 >= 25*xabs
25*xabs = 80459
C
w4772
80462 >= 25*xabs

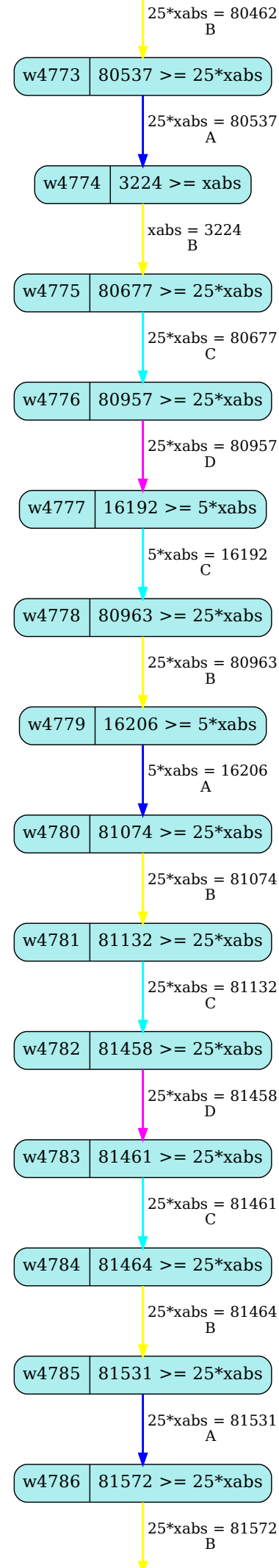
25*xabs = 80462
B
w4773
80537 >= 25*xabs
25*xabs = 80537
A
w4774
3224 >= xabs
xabs = 3224
B
w4775
80677 >= 25*xabs
25*xabs = 80677
C
w4776
80957 >= 25*xabs
25*xabs = 80957
D
w4777
16192 >= 5*xabs
5*xabs = 16192
C
w4778
80963 >= 25*xabs
25*xabs = 80963
B
w4779
16206 >= 5*xabs
5*xabs = 16206
A
w4780
81074 >= 25*xabs
25*xabs = 81074
B
w4781
81132 >= 25*xabs
25*xabs = 81132
C
w4782
81458 >= 25*xabs
25*xabs = 81458
D
w4783
81461 >= 25*xabs
25*xabs = 81461
C
w4784
81464 >= 25*xabs
25*xabs = 81464
B
w4785
81531 >= 25*xabs
25*xabs = 81531
A
w4786
81572 >= 25*xabs
25*xabs = 81572
B

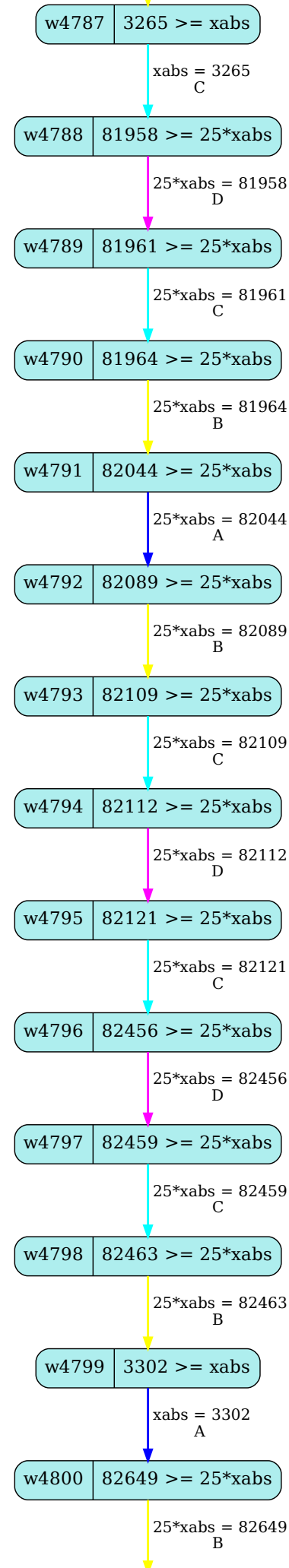
w4787
3265 >= xabs
xabs = 3265
C
w4788
81958 >= 25*xabs
25*xabs = 81958
D
w4789
81961 >= 25*xabs
25*xabs = 81961
C
w4790
81964 >= 25*xabs
25*xabs = 81964
B
w4791
82044 >= 25*xabs
25*xabs = 82044
A
w4792
82089 >= 25*xabs
25*xabs = 82089
B
w4793
82109 >= 25*xabs
25*xabs = 82109
C
w4794
82112 >= 25*xabs
25*xabs = 82112
D
w4795
82121 >= 25*xabs
25*xabs = 82121
C
w4796
82456 >= 25*xabs
25*xabs = 82456
D
w4797
82459 >= 25*xabs
25*xabs = 82459
C
w4798
82463 >= 25*xabs
25*xabs = 82463
B
w4799
3302 >= xabs
xabs = 3302
A
w4800
82649 >= 25*xabs
25*xabs = 82649
B

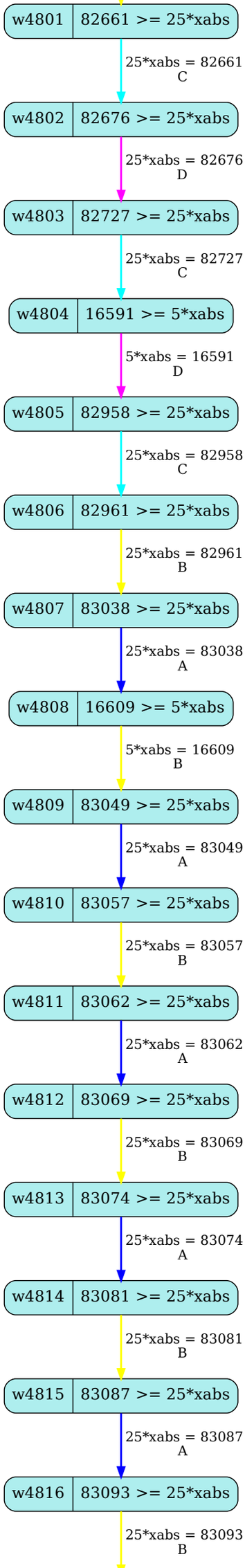
w4801
82661 >= 25*xabs
25*xabs = 82661
C
w4802
82676 >= 25*xabs
25*xabs = 82676
D
w4803
82727 >= 25*xabs
25*xabs = 82727
C
w4804
16591 >= 5*xabs
5*xabs = 16591
D
w4805
82958 >= 25*xabs
25*xabs = 82958
C
w4806
82961 >= 25*xabs
25*xabs = 82961
B
w4807
83038 >= 25*xabs
25*xabs = 83038
A
w4808
16609 >= 5*xabs
5*xabs = 16609
B
w4809
83049 >= 25*xabs
25*xabs = 83049
A
w4810
83057 >= 25*xabs
25*xabs = 83057
B
w4811
83062 >= 25*xabs
25*xabs = 83062
A
w4812
83069 >= 25*xabs
25*xabs = 83069
B
w4813
83074 >= 25*xabs
25*xabs = 83074
A
w4814
83081 >= 25*xabs
25*xabs = 83081
B
w4815
83087 >= 25*xabs
25*xabs = 83087
A
w4816
83093 >= 25*xabs
25*xabs = 83093
B

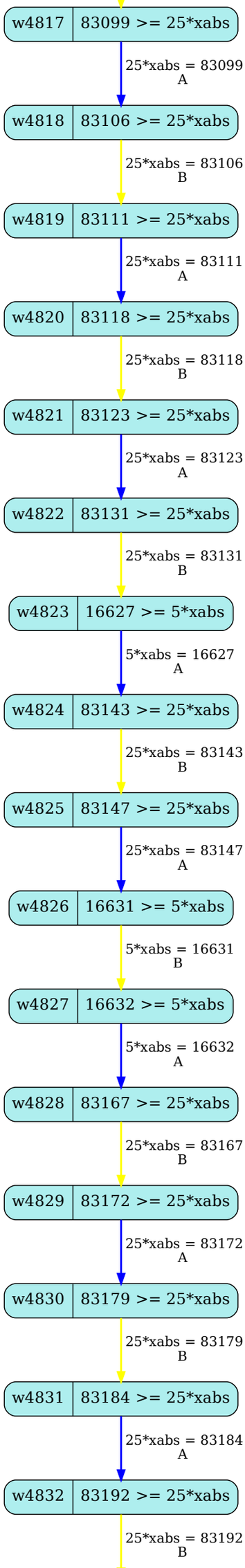
w4817
83099 >= 25*xabs
25*xabs = 83099
A
w4818
83106 >= 25*xabs
25*xabs = 83106
B
w4819
83111 >= 25*xabs
25*xabs = 83111
A
w4820
83118 >= 25*xabs
25*xabs = 83118
B
w4821
83123 >= 25*xabs
25*xabs = 83123
A
w4822
83131 >= 25*xabs
25*xabs = 83131
B
w4823
16627 >= 5*xabs
5*xabs = 16627
A
w4824
83143 >= 25*xabs
25*xabs = 83143
B
w4825
83147 >= 25*xabs
25*xabs = 83147
A
w4826
16631 >= 5*xabs
5*xabs = 16631
B
w4827
16632 >= 5*xabs
5*xabs = 16632
A
w4828
83167 >= 25*xabs
25*xabs = 83167
B
w4829
83172 >= 25*xabs
25*xabs = 83172
A
w4830
83179 >= 25*xabs
25*xabs = 83179
B
w4831
83184 >= 25*xabs
25*xabs = 83184
A
w4832
83192 >= 25*xabs
25*xabs = 83192
B

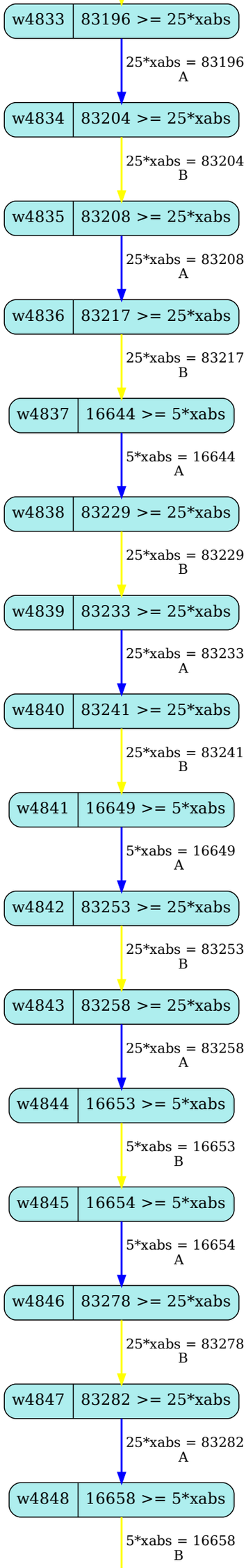
w4833
83196 >= 25*xabs
25*xabs = 83196
A
w4834
83204 >= 25*xabs
25*xabs = 83204
B
w4835
83208 >= 25*xabs
25*xabs = 83208
A
w4836
83217 >= 25*xabs
25*xabs = 83217
B
w4837
16644 >= 5*xabs
5*xabs = 16644
A
w4838
83229 >= 25*xabs
25*xabs = 83229
B
w4839
83233 >= 25*xabs
25*xabs = 83233
A
w4840
83241 >= 25*xabs
25*xabs = 83241
B
w4841
16649 >= 5*xabs
5*xabs = 16649
A
w4842
83253 >= 25*xabs
25*xabs = 83253
B
w4843
83258 >= 25*xabs
25*xabs = 83258
A
w4844
16653 >= 5*xabs
5*xabs = 16653
B
w4845
16654 >= 5*xabs
5*xabs = 16654
A
w4846
83278 >= 25*xabs
25*xabs = 83278
B
w4847
83282 >= 25*xabs
25*xabs = 83282
A
w4848
16658 >= 5*xabs
5*xabs = 16658
B

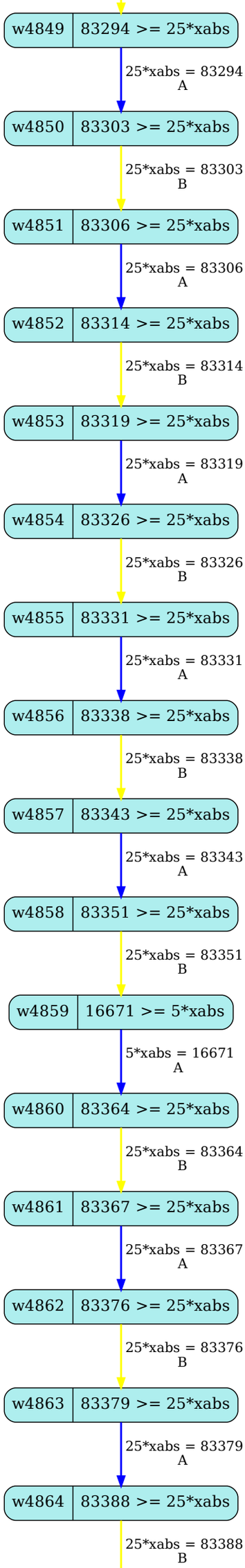
w4849
83294 >= 25*xabs
25*xabs = 83294
A
w4850
83303 >= 25*xabs
25*xabs = 83303
B
w4851
83306 >= 25*xabs
25*xabs = 83306
A
w4852
83314 >= 25*xabs
25*xabs = 83314
B
w4853
83319 >= 25*xabs
25*xabs = 83319
A
w4854
83326 >= 25*xabs
25*xabs = 83326
B
w4855
83331 >= 25*xabs
25*xabs = 83331
A
w4856
83338 >= 25*xabs
25*xabs = 83338
B
w4857
83343 >= 25*xabs
25*xabs = 83343
A
w4858
83351 >= 25*xabs
25*xabs = 83351
B
w4859
16671 >= 5*xabs
5*xabs = 16671
A
w4860
83364 >= 25*xabs
25*xabs = 83364
B
w4861
83367 >= 25*xabs
25*xabs = 83367
A
w4862
83376 >= 25*xabs
25*xabs = 83376
B
w4863
83379 >= 25*xabs
25*xabs = 83379
A
w4864
83388 >= 25*xabs
25*xabs = 83388
B

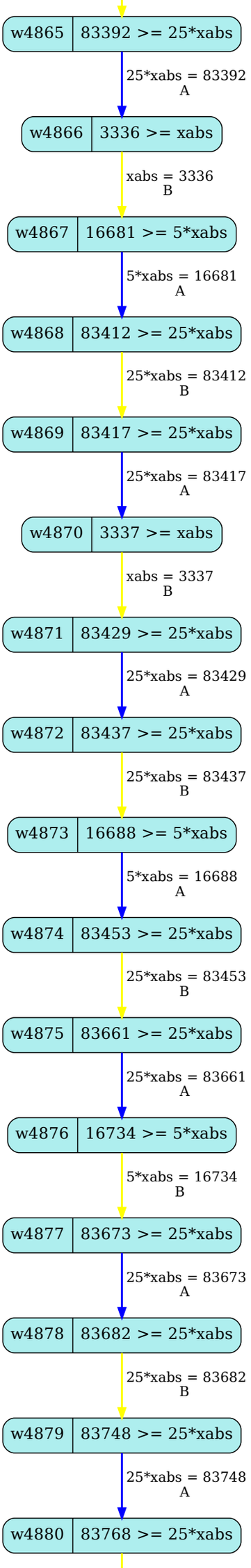
w4865
83392 >= 25*xabs
25*xabs = 83392
A
w4866
3336 >= xabs
xabs = 3336
B
w4867
16681 >= 5*xabs
5*xabs = 16681
A
w4868
83412 >= 25*xabs
25*xabs = 83412
B
w4869
83417 >= 25*xabs
25*xabs = 83417
A
w4870
3337 >= xabs
xabs = 3337
B
w4871
83429 >= 25*xabs
25*xabs = 83429
A
w4872
83437 >= 25*xabs
25*xabs = 83437
B
w4873
16688 >= 5*xabs
5*xabs = 16688
A
w4874
83453 >= 25*xabs
25*xabs = 83453
B
w4875
83661 >= 25*xabs
25*xabs = 83661
A
w4876
16734 >= 5*xabs
5*xabs = 16734
B
w4877
83673 >= 25*xabs
25*xabs = 83673
A
w4878
83682 >= 25*xabs
25*xabs = 83682
B
w4879
83748 >= 25*xabs
25*xabs = 83748
A
w4880
83768 >= 25*xabs

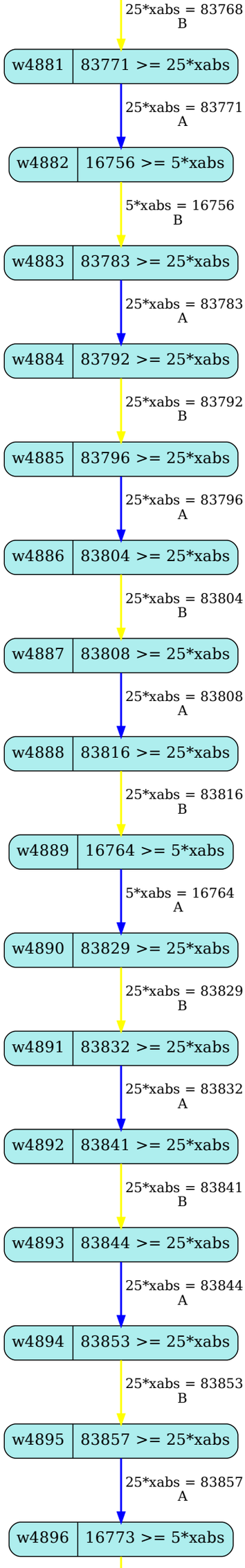
25*xabs = 83768
B
w4881
83771 >= 25*xabs
25*xabs = 83771
A
w4882
16756 >= 5*xabs
5*xabs = 16756
B
w4883
83783 >= 25*xabs
25*xabs = 83783
A
w4884
83792 >= 25*xabs
25*xabs = 83792
B
w4885
83796 >= 25*xabs
25*xabs = 83796
A
w4886
83804 >= 25*xabs
25*xabs = 83804
B
w4887
83808 >= 25*xabs
25*xabs = 83808
A
w4888
83816 >= 25*xabs
25*xabs = 83816
B
w4889
16764 >= 5*xabs
5*xabs = 16764
A
w4890
83829 >= 25*xabs
25*xabs = 83829
B
w4891
83832 >= 25*xabs
25*xabs = 83832
A
w4892
83841 >= 25*xabs
25*xabs = 83841
B
w4893
83844 >= 25*xabs
25*xabs = 83844
A
w4894
83853 >= 25*xabs
25*xabs = 83853
B
w4895
83857 >= 25*xabs
25*xabs = 83857
A
w4896
16773 >= 5*xabs

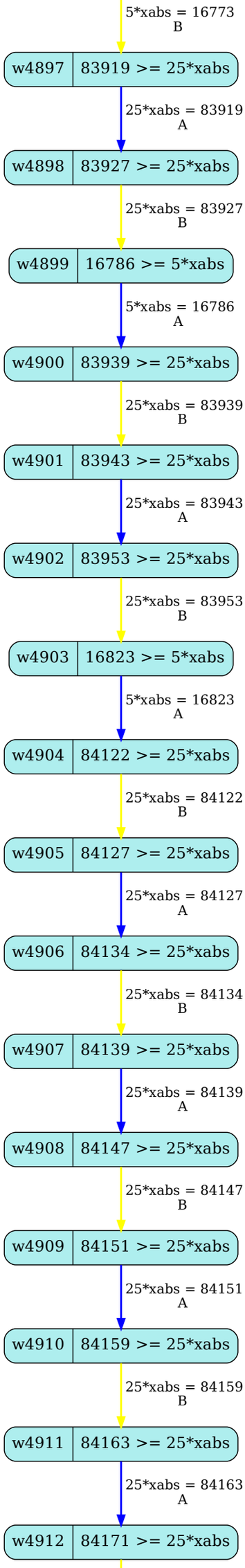
5*xabs = 16773
B
w4897
83919 >= 25*xabs
25*xabs = 83919
A
w4898
83927 >= 25*xabs
25*xabs = 83927
B
w4899
16786 >= 5*xabs
5*xabs = 16786
A
w4900
83939 >= 25*xabs
25*xabs = 83939
B
w4901
83943 >= 25*xabs
25*xabs = 83943
A
w4902
83953 >= 25*xabs
25*xabs = 83953
B
w4903
16823 >= 5*xabs
5*xabs = 16823
A
w4904
84122 >= 25*xabs
25*xabs = 84122
B
w4905
84127 >= 25*xabs
25*xabs = 84127
A
w4906
84134 >= 25*xabs
25*xabs = 84134
B
w4907
84139 >= 25*xabs
25*xabs = 84139
A
w4908
84147 >= 25*xabs
25*xabs = 84147
B
w4909
84151 >= 25*xabs
25*xabs = 84151
A
w4910
84159 >= 25*xabs
25*xabs = 84159
B
w4911
84163 >= 25*xabs
25*xabs = 84163
A
w4912
84171 >= 25*xabs

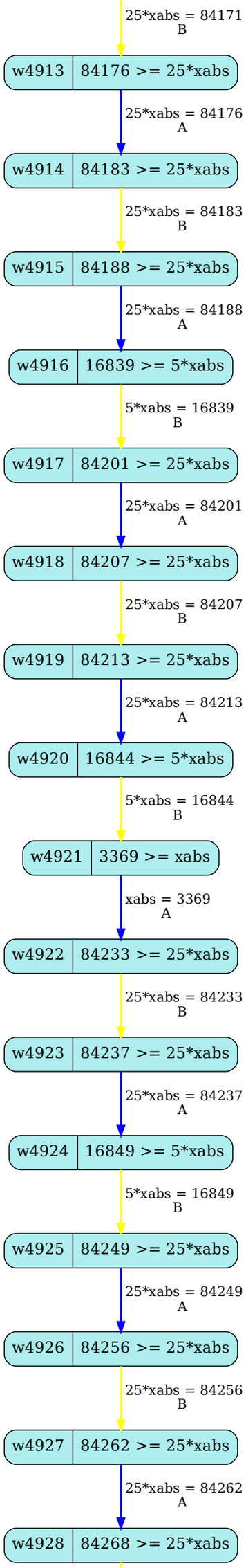
25*xabs = 84171
B
w4913
84176 >= 25*xabs
25*xabs = 84176
A
w4914
84183 >= 25*xabs
25*xabs = 84183
B
w4915
84188 >= 25*xabs
25*xabs = 84188
A
w4916
16839 >= 5*xabs
5*xabs = 16839
B
w4917
84201 >= 25*xabs
25*xabs = 84201
A
w4918
84207 >= 25*xabs
25*xabs = 84207
B
w4919
84213 >= 25*xabs
25*xabs = 84213
A
w4920
16844 >= 5*xabs
5*xabs = 16844
B
w4921
3369 >= xabs
xabs = 3369
A
w4922
84233 >= 25*xabs
25*xabs = 84233
B
w4923
84237 >= 25*xabs
25*xabs = 84237
A
w4924
16849 >= 5*xabs
5*xabs = 16849
B
w4925
84249 >= 25*xabs
25*xabs = 84249
A
w4926
84256 >= 25*xabs
25*xabs = 84256
B
w4927
84262 >= 25*xabs
25*xabs = 84262
A
w4928
84268 >= 25*xabs

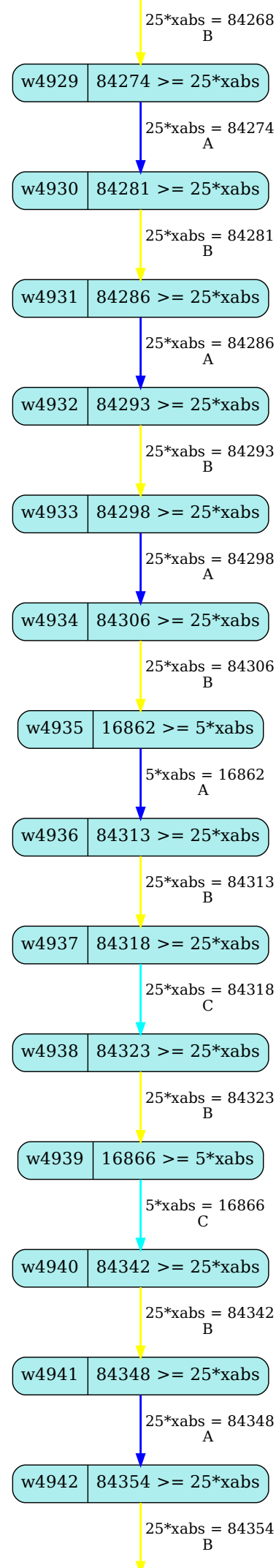
25*xabs = 84268
B
w4929
84274 >= 25*xabs
25*xabs = 84274
A
w4930
84281 >= 25*xabs
25*xabs = 84281
B
w4931
84286 >= 25*xabs
25*xabs = 84286
A
w4932
84293 >= 25*xabs
25*xabs = 84293
B
w4933
84298 >= 25*xabs
25*xabs = 84298
A
w4934
84306 >= 25*xabs
25*xabs = 84306
B
w4935
16862 >= 5*xabs
5*xabs = 16862
A
w4936
84313 >= 25*xabs
25*xabs = 84313
B
w4937
84318 >= 25*xabs
25*xabs = 84318
C
w4938
84323 >= 25*xabs
25*xabs = 84323
B
w4939
16866 >= 5*xabs
5*xabs = 16866
C
w4940
84342 >= 25*xabs
25*xabs = 84342
B
w4941
84348 >= 25*xabs
25*xabs = 84348
A
w4942
84354 >= 25*xabs
25*xabs = 84354
B

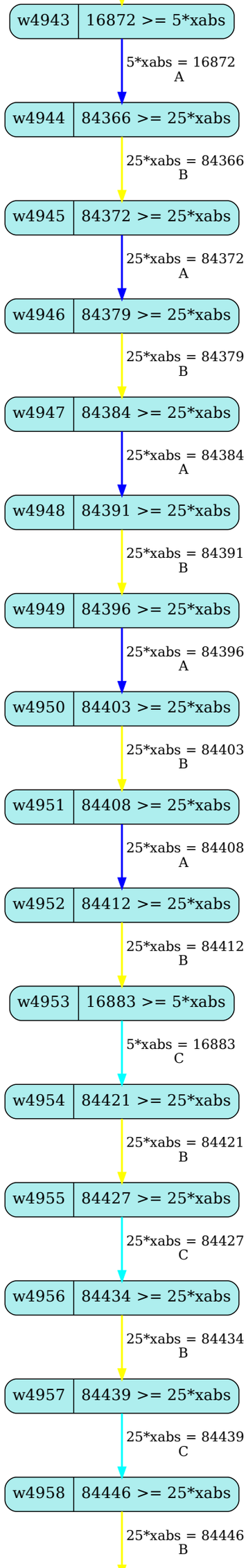
w4943
16872 >= 5*xabs
5*xabs = 16872
A
w4944
84366 >= 25*xabs
25*xabs = 84366
B
w4945
84372 >= 25*xabs
25*xabs = 84372
A
w4946
84379 >= 25*xabs
25*xabs = 84379
B
w4947
84384 >= 25*xabs
25*xabs = 84384
A
w4948
84391 >= 25*xabs
25*xabs = 84391
B
w4949
84396 >= 25*xabs
25*xabs = 84396
A
w4950
84403 >= 25*xabs
25*xabs = 84403
B
w4951
84408 >= 25*xabs
25*xabs = 84408
A
w4952
84412 >= 25*xabs
25*xabs = 84412
B
w4953
16883 >= 5*xabs
5*xabs = 16883
C
w4954
84421 >= 25*xabs
25*xabs = 84421
B
w4955
84427 >= 25*xabs
25*xabs = 84427
C
w4956
84434 >= 25*xabs
25*xabs = 84434
B
w4957
84439 >= 25*xabs
25*xabs = 84439
C
w4958
84446 >= 25*xabs
25*xabs = 84446
B

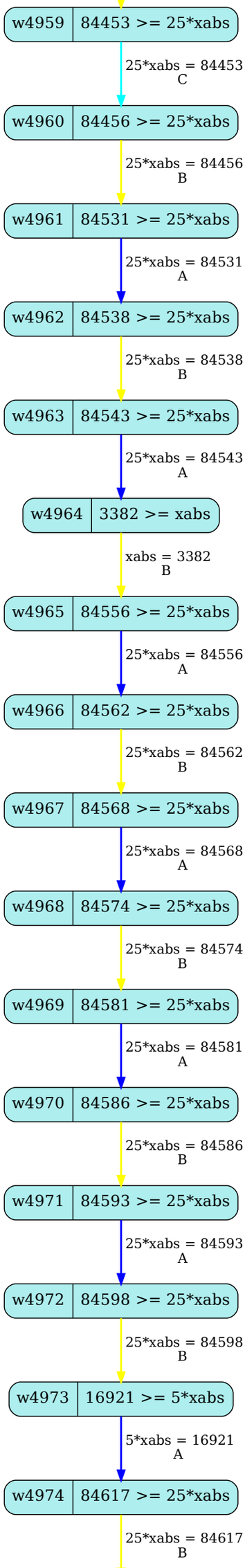
w4959
84453 >= 25*xabs
25*xabs = 84453
C
w4960
84456 >= 25*xabs
25*xabs = 84456
B
w4961
84531 >= 25*xabs
25*xabs = 84531
A
w4962
84538 >= 25*xabs
25*xabs = 84538
B
w4963
84543 >= 25*xabs
25*xabs = 84543
A
w4964
3382 >= xabs
xabs = 3382
B
w4965
84556 >= 25*xabs
25*xabs = 84556
A
w4966
84562 >= 25*xabs
25*xabs = 84562
B
w4967
84568 >= 25*xabs
25*xabs = 84568
A
w4968
84574 >= 25*xabs
25*xabs = 84574
B
w4969
84581 >= 25*xabs
25*xabs = 84581
A
w4970
84586 >= 25*xabs
25*xabs = 84586
B
w4971
84593 >= 25*xabs
25*xabs = 84593
A
w4972
84598 >= 25*xabs
25*xabs = 84598
B
w4973
16921 >= 5*xabs
5*xabs = 16921
A
w4974
84617 >= 25*xabs
25*xabs = 84617
B

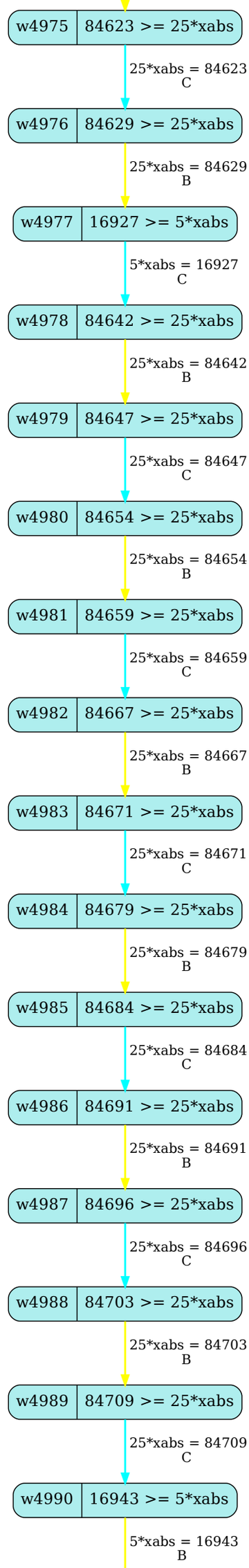
w4975
84623 >= 25*xabs
25*xabs = 84623
C
w4976
84629 >= 25*xabs
25*xabs = 84629
B
w4977
16927 >= 5*xabs
5*xabs = 16927
C
w4978
84642 >= 25*xabs
25*xabs = 84642
B
w4979
84647 >= 25*xabs
25*xabs = 84647
C
w4980
84654 >= 25*xabs
25*xabs = 84654
B
w4981
84659 >= 25*xabs
25*xabs = 84659
C
w4982
84667 >= 25*xabs
25*xabs = 84667
B
w4983
84671 >= 25*xabs
25*xabs = 84671
C
w4984
84679 >= 25*xabs
25*xabs = 84679
B
w4985
84684 >= 25*xabs
25*xabs = 84684
C
w4986
84691 >= 25*xabs
25*xabs = 84691
B
w4987
84696 >= 25*xabs
25*xabs = 84696
C
w4988
84703 >= 25*xabs
25*xabs = 84703
B
w4989
84709 >= 25*xabs
25*xabs = 84709
C
w4990
16943 >= 5*xabs
5*xabs = 16943
B

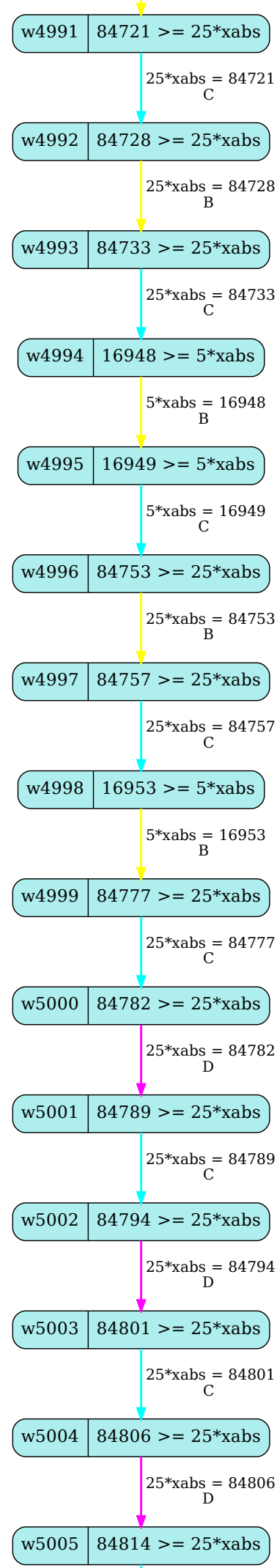
w4991
84721 >= 25*xabs
25*xabs = 84721
C
w4992
84728 >= 25*xabs
25*xabs = 84728
B
w4993
84733 >= 25*xabs
25*xabs = 84733
C
w4994
16948 >= 5*xabs
5*xabs = 16948
B
w4995
16949 >= 5*xabs
5*xabs = 16949
C
w4996
84753 >= 25*xabs
25*xabs = 84753
B
w4997
84757 >= 25*xabs
25*xabs = 84757
C
w4998
16953 >= 5*xabs
5*xabs = 16953
B
w4999
84777 >= 25*xabs
25*xabs = 84777
C
w5000
84782 >= 25*xabs
25*xabs = 84782
D
w5001
84789 >= 25*xabs
25*xabs = 84789
C
w5002
84794 >= 25*xabs
25*xabs = 84794
D
w5003
84801 >= 25*xabs
25*xabs = 84801
C
w5004
84806 >= 25*xabs
25*xabs = 84806
D
w5005
84814 >= 25*xabs

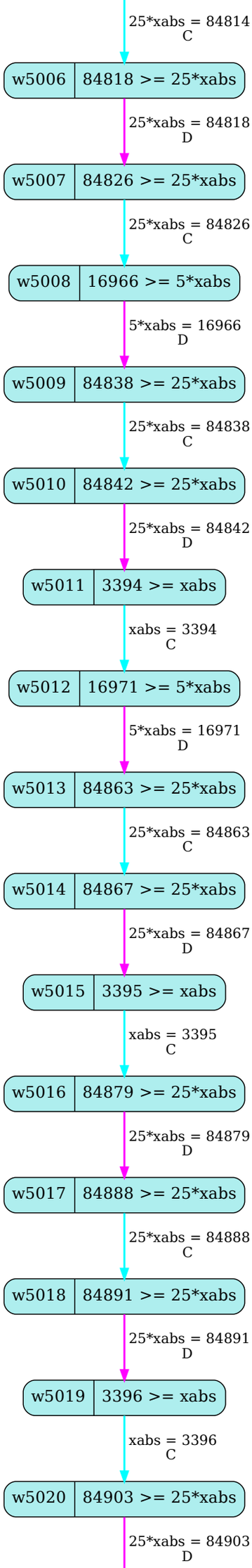
25*xabs = 84814
C
w5006
84818 >= 25*xabs
25*xabs = 84818
D
w5007
84826 >= 25*xabs
25*xabs = 84826
C
w5008
16966 >= 5*xabs
5*xabs = 16966
D
w5009
84838 >= 25*xabs
25*xabs = 84838
C
w5010
84842 >= 25*xabs
25*xabs = 84842
D
w5011
3394 >= xabs
xabs = 3394
C
w5012
16971 >= 5*xabs
5*xabs = 16971
D
w5013
84863 >= 25*xabs
25*xabs = 84863
C
w5014
84867 >= 25*xabs
25*xabs = 84867
D
w5015
3395 >= xabs
xabs = 3395
C
w5016
84879 >= 25*xabs
25*xabs = 84879
D
w5017
84888 >= 25*xabs
25*xabs = 84888
C
w5018
84891 >= 25*xabs
25*xabs = 84891
D
w5019
3396 >= xabs
xabs = 3396
C
w5020
84903 >= 25*xabs
25*xabs = 84903
D

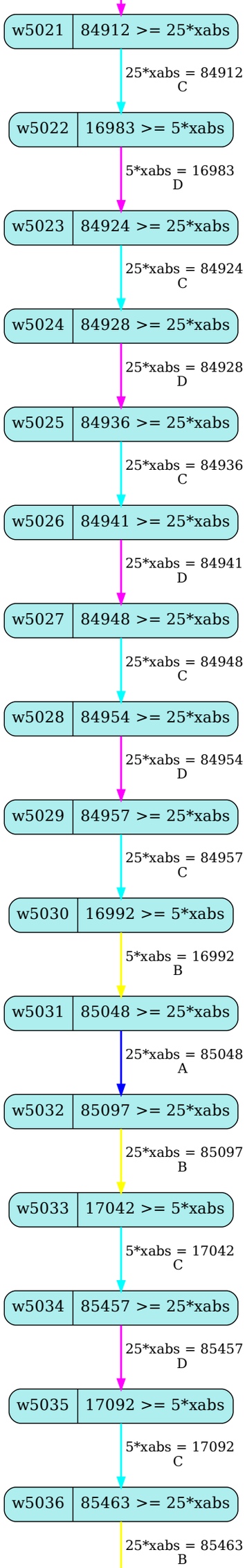
w5021
84912 >= 25*xabs
25*xabs = 84912
C
w5022
16983 >= 5*xabs
5*xabs = 16983
D
w5023
84924 >= 25*xabs
25*xabs = 84924
C
w5024
84928 >= 25*xabs
25*xabs = 84928
D
w5025
84936 >= 25*xabs
25*xabs = 84936
C
w5026
84941 >= 25*xabs
25*xabs = 84941
D
w5027
84948 >= 25*xabs
25*xabs = 84948
C
w5028
84954 >= 25*xabs
25*xabs = 84954
D
w5029
84957 >= 25*xabs
25*xabs = 84957
C
w5030
16992 >= 5*xabs
5*xabs = 16992
B
w5031
85048 >= 25*xabs
25*xabs = 85048
A
w5032
85097 >= 25*xabs
25*xabs = 85097
B
w5033
17042 >= 5*xabs
5*xabs = 17042
C
w5034
85457 >= 25*xabs
25*xabs = 85457
D
w5035
17092 >= 5*xabs
5*xabs = 17092
C
w5036
85463 >= 25*xabs
25*xabs = 85463
B

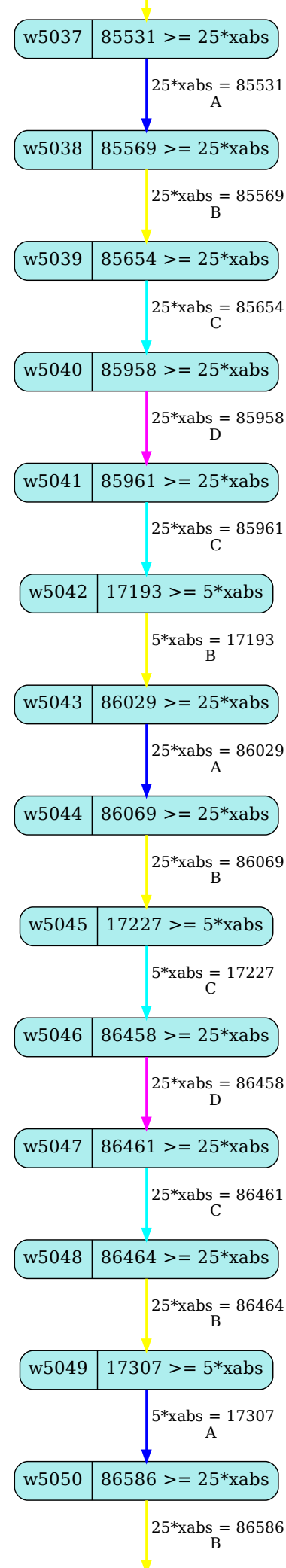
w5037
85531 >= 25*xabs
25*xabs = 85531
A
w5038
85569 >= 25*xabs
25*xabs = 85569
B
w5039
85654 >= 25*xabs
25*xabs = 85654
C
w5040
85958 >= 25*xabs
25*xabs = 85958
D
w5041
85961 >= 25*xabs
25*xabs = 85961
C
w5042
17193 >= 5*xabs
5*xabs = 17193
B
w5043
86029 >= 25*xabs
25*xabs = 86029
A
w5044
86069 >= 25*xabs
25*xabs = 86069
B
w5045
17227 >= 5*xabs
5*xabs = 17227
C
w5046
86458 >= 25*xabs
25*xabs = 86458
D
w5047
86461 >= 25*xabs
25*xabs = 86461
C
w5048
86464 >= 25*xabs
25*xabs = 86464
B
w5049
17307 >= 5*xabs
5*xabs = 17307
A
w5050
86586 >= 25*xabs
25*xabs = 86586
B

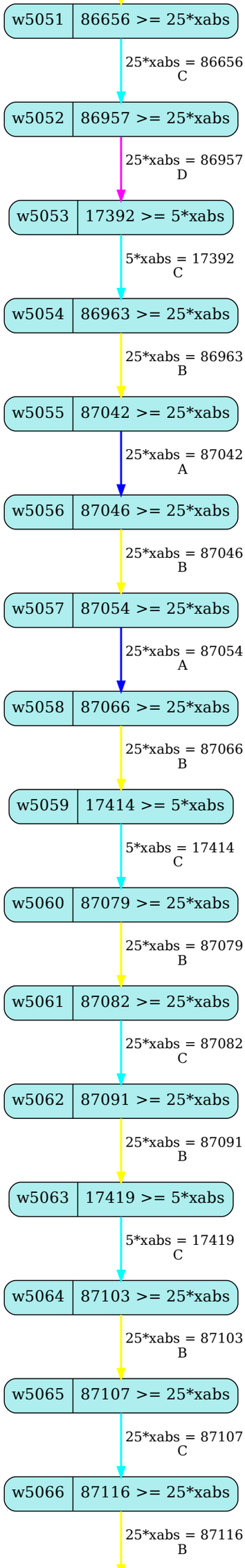
w5051
86656 >= 25*xabs
25*xabs = 86656
C
w5052
86957 >= 25*xabs
25*xabs = 86957
D
w5053
17392 >= 5*xabs
5*xabs = 17392
C
w5054
86963 >= 25*xabs
25*xabs = 86963
B
w5055
87042 >= 25*xabs
25*xabs = 87042
A
w5056
87046 >= 25*xabs
25*xabs = 87046
B
w5057
87054 >= 25*xabs
25*xabs = 87054
A
w5058
87066 >= 25*xabs
25*xabs = 87066
B
w5059
17414 >= 5*xabs
5*xabs = 17414
C
w5060
87079 >= 25*xabs
25*xabs = 87079
B
w5061
87082 >= 25*xabs
25*xabs = 87082
C
w5062
87091 >= 25*xabs
25*xabs = 87091
B
w5063
17419 >= 5*xabs
5*xabs = 17419
C
w5064
87103 >= 25*xabs
25*xabs = 87103
B
w5065
87107 >= 25*xabs
25*xabs = 87107
C
w5066
87116 >= 25*xabs
25*xabs = 87116
B

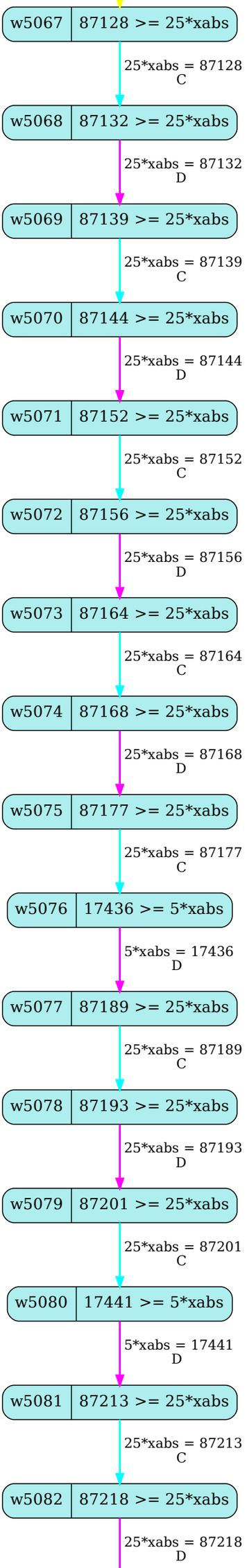
w5067
87128 >= 25*xabs
25*xabs = 87128
C
w5068
87132 >= 25*xabs
25*xabs = 87132
D
w5069
87139 >= 25*xabs
25*xabs = 87139
C
w5070
87144 >= 25*xabs
25*xabs = 87144
D
w5071
87152 >= 25*xabs
25*xabs = 87152
C
w5072
87156 >= 25*xabs
25*xabs = 87156
D
w5073
87164 >= 25*xabs
25*xabs = 87164
C
w5074
87168 >= 25*xabs
25*xabs = 87168
D
w5075
87177 >= 25*xabs
25*xabs = 87177
C
w5076
17436 >= 5*xabs
5*xabs = 17436
D
w5077
87189 >= 25*xabs
25*xabs = 87189
C
w5078
87193 >= 25*xabs
25*xabs = 87193
D
w5079
87201 >= 25*xabs
25*xabs = 87201
C
w5080
17441 >= 5*xabs
5*xabs = 17441
D
w5081
87213 >= 25*xabs
25*xabs = 87213
C
w5082
87218 >= 25*xabs
25*xabs = 87218
D

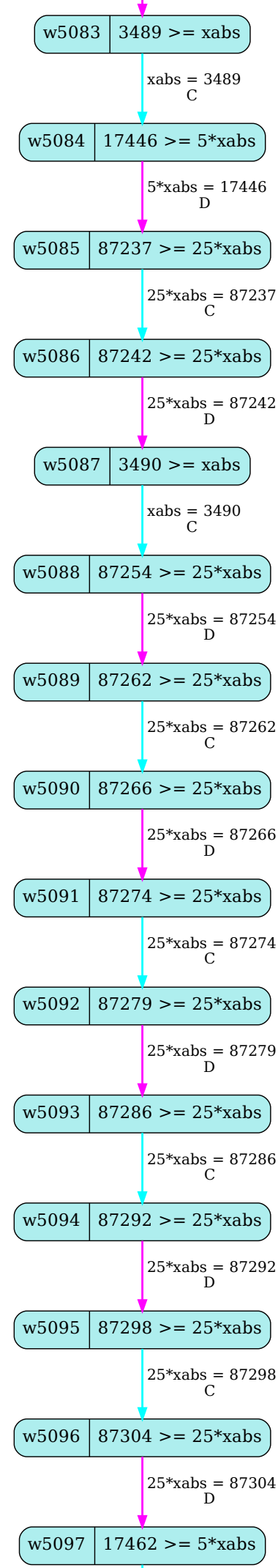
w5083
3489 >= xabs
xabs = 3489
C
w5084
17446 >= 5*xabs
5*xabs = 17446
D
w5085
87237 >= 25*xabs
25*xabs = 87237
C
w5086
87242 >= 25*xabs
25*xabs = 87242
D
w5087
3490 >= xabs
xabs = 3490
C
w5088
87254 >= 25*xabs
25*xabs = 87254
D
w5089
87262 >= 25*xabs
25*xabs = 87262
C
w5090
87266 >= 25*xabs
25*xabs = 87266
D
w5091
87274 >= 25*xabs
25*xabs = 87274
C
w5092
87279 >= 25*xabs
25*xabs = 87279
D
w5093
87286 >= 25*xabs
25*xabs = 87286
C
w5094
87292 >= 25*xabs
25*xabs = 87292
D
w5095
87298 >= 25*xabs
25*xabs = 87298
C
w5096
87304 >= 25*xabs
25*xabs = 87304
D
w5097
17462 >= 5*xabs

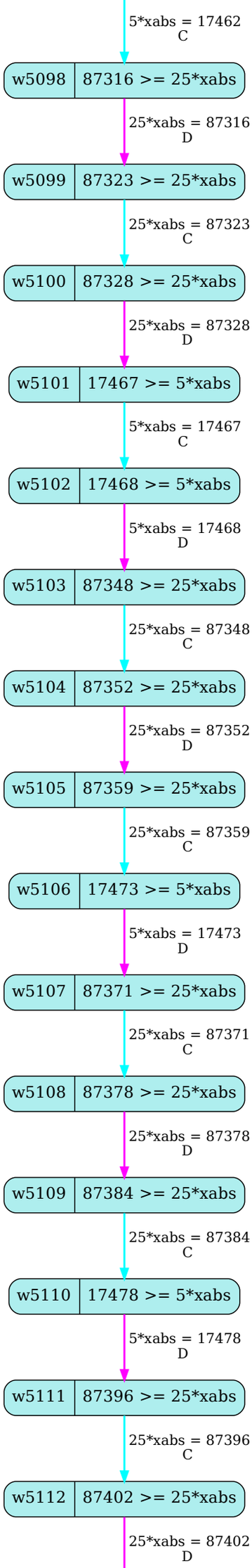
5*xabs = 17462
C
w5098
87316 >= 25*xabs
25*xabs = 87316
D
w5099
87323 >= 25*xabs
25*xabs = 87323
C
w5100
87328 >= 25*xabs
25*xabs = 87328
D
w5101
17467 >= 5*xabs
5*xabs = 17467
C
w5102
17468 >= 5*xabs
5*xabs = 17468
D
w5103
87348 >= 25*xabs
25*xabs = 87348
C
w5104
87352 >= 25*xabs
25*xabs = 87352
D
w5105
87359 >= 25*xabs
25*xabs = 87359
C
w5106
17473 >= 5*xabs
5*xabs = 17473
D
w5107
87371 >= 25*xabs
25*xabs = 87371
C
w5108
87378 >= 25*xabs
25*xabs = 87378
D
w5109
87384 >= 25*xabs
25*xabs = 87384
C
w5110
17478 >= 5*xabs
5*xabs = 17478
D
w5111
87396 >= 25*xabs
25*xabs = 87396
C
w5112
87402 >= 25*xabs
25*xabs = 87402
D

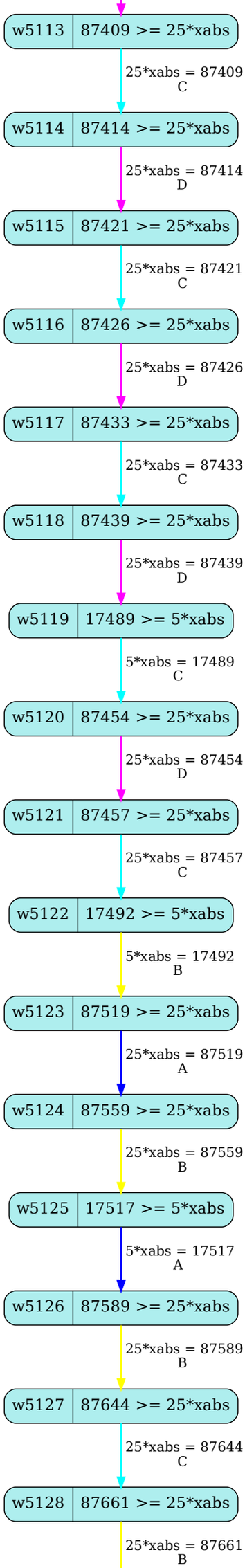
w5113
87409 >= 25*xabs
25*xabs = 87409
C
w5114
87414 >= 25*xabs
25*xabs = 87414
D
w5115
87421 >= 25*xabs
25*xabs = 87421
C
w5116
87426 >= 25*xabs
25*xabs = 87426
D
w5117
87433 >= 25*xabs
25*xabs = 87433
C
w5118
87439 >= 25*xabs
25*xabs = 87439
D
w5119
17489 >= 5*xabs
5*xabs = 17489
C
w5120
87454 >= 25*xabs
25*xabs = 87454
D
w5121
87457 >= 25*xabs
25*xabs = 87457
C
w5122
17492 >= 5*xabs
5*xabs = 17492
B
w5123
87519 >= 25*xabs
25*xabs = 87519
A
w5124
87559 >= 25*xabs
25*xabs = 87559
B
w5125
17517 >= 5*xabs
5*xabs = 17517
A
w5126
87589 >= 25*xabs
25*xabs = 87589
B
w5127
87644 >= 25*xabs
25*xabs = 87644
C
w5128
87661 >= 25*xabs
25*xabs = 87661
B

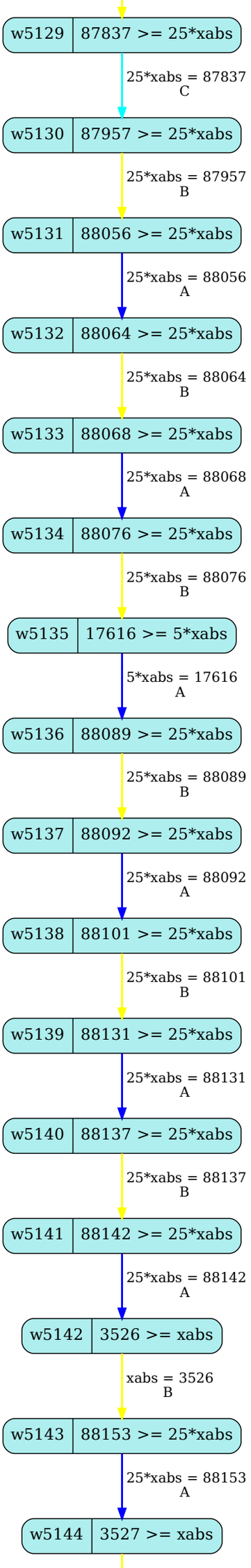
w5129
87837 >= 25*xabs
25*xabs = 87837
C
w5130
87957 >= 25*xabs
25*xabs = 87957
B
w5131
88056 >= 25*xabs
25*xabs = 88056
A
w5132
88064 >= 25*xabs
25*xabs = 88064
B
w5133
88068 >= 25*xabs
25*xabs = 88068
A
w5134
88076 >= 25*xabs
25*xabs = 88076
B
w5135
17616 >= 5*xabs
5*xabs = 17616
A
w5136
88089 >= 25*xabs
25*xabs = 88089
B
w5137
88092 >= 25*xabs
25*xabs = 88092
A
w5138
88101 >= 25*xabs
25*xabs = 88101
B
w5139
88131 >= 25*xabs
25*xabs = 88131
A
w5140
88137 >= 25*xabs
25*xabs = 88137
B
w5141
88142 >= 25*xabs
25*xabs = 88142
A
w5142
3526 >= xabs
xabs = 3526
B
w5143
88153 >= 25*xabs
25*xabs = 88153
A
w5144
3527 >= xabs

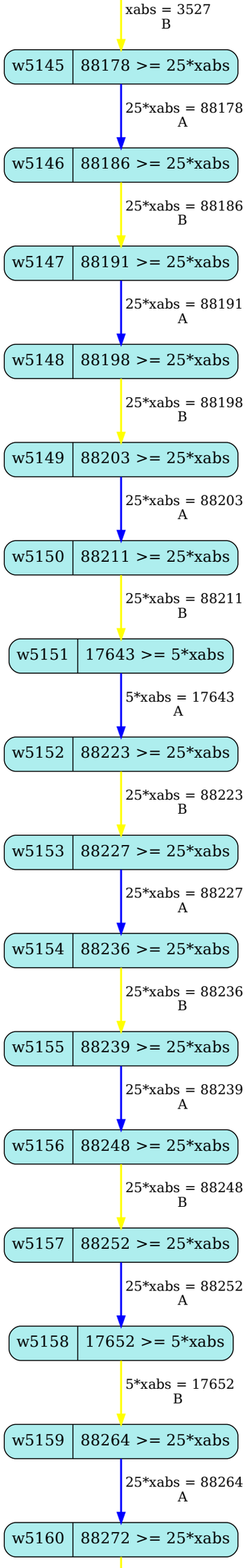
xabs = 3527
B
w5145
88178 >= 25*xabs
25*xabs = 88178
A
w5146
88186 >= 25*xabs
25*xabs = 88186
B
w5147
88191 >= 25*xabs
25*xabs = 88191
A
w5148
88198 >= 25*xabs
25*xabs = 88198
B
w5149
88203 >= 25*xabs
25*xabs = 88203
A
w5150
88211 >= 25*xabs
25*xabs = 88211
B
w5151
17643 >= 5*xabs
5*xabs = 17643
A
w5152
88223 >= 25*xabs
25*xabs = 88223
B
w5153
88227 >= 25*xabs
25*xabs = 88227
A
w5154
88236 >= 25*xabs
25*xabs = 88236
B
w5155
88239 >= 25*xabs
25*xabs = 88239
A
w5156
88248 >= 25*xabs
25*xabs = 88248
B
w5157
88252 >= 25*xabs
25*xabs = 88252
A
w5158
17652 >= 5*xabs
5*xabs = 17652
B
w5159
88264 >= 25*xabs
25*xabs = 88264
A
w5160
88272 >= 25*xabs

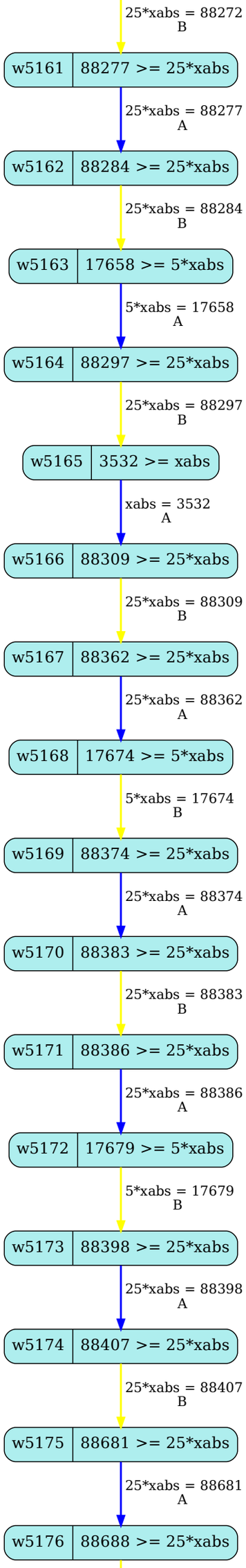
25*xabs = 88272
B
w5161
88277 >= 25*xabs
25*xabs = 88277
A
w5162
88284 >= 25*xabs
25*xabs = 88284
B
w5163
17658 >= 5*xabs
5*xabs = 17658
A
w5164
88297 >= 25*xabs
25*xabs = 88297
B
w5165
3532 >= xabs
xabs = 3532
A
w5166
88309 >= 25*xabs
25*xabs = 88309
B
w5167
88362 >= 25*xabs
25*xabs = 88362
A
w5168
17674 >= 5*xabs
5*xabs = 17674
B
w5169
88374 >= 25*xabs
25*xabs = 88374
A
w5170
88383 >= 25*xabs
25*xabs = 88383
B
w5171
88386 >= 25*xabs
25*xabs = 88386
A
w5172
17679 >= 5*xabs
5*xabs = 17679
B
w5173
88398 >= 25*xabs
25*xabs = 88398
A
w5174
88407 >= 25*xabs
25*xabs = 88407
B
w5175
88681 >= 25*xabs
25*xabs = 88681
A
w5176
88688 >= 25*xabs

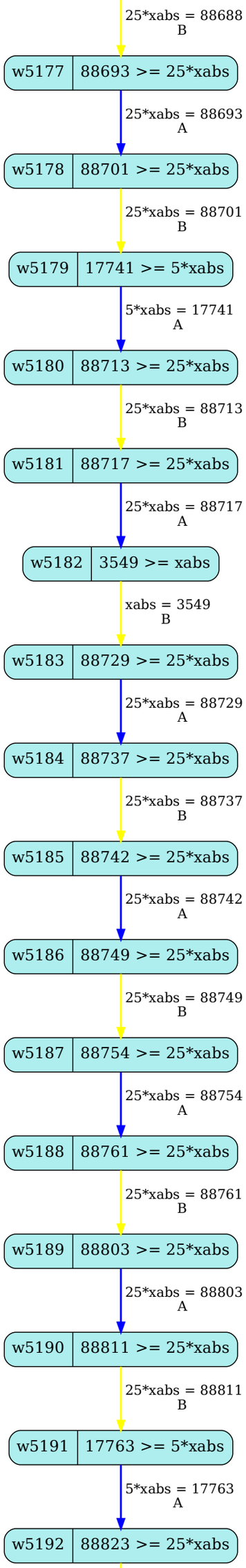
25*xabs = 88688
B
w5177
88693 >= 25*xabs
25*xabs = 88693
A
w5178
88701 >= 25*xabs
25*xabs = 88701
B
w5179
17741 >= 5*xabs
5*xabs = 17741
A
w5180
88713 >= 25*xabs
25*xabs = 88713
B
w5181
88717 >= 25*xabs
25*xabs = 88717
A
w5182
3549 >= xabs
xabs = 3549
B
w5183
88729 >= 25*xabs
25*xabs = 88729
A
w5184
88737 >= 25*xabs
25*xabs = 88737
B
w5185
88742 >= 25*xabs
25*xabs = 88742
A
w5186
88749 >= 25*xabs
25*xabs = 88749
B
w5187
88754 >= 25*xabs
25*xabs = 88754
A
w5188
88761 >= 25*xabs
25*xabs = 88761
B
w5189
88803 >= 25*xabs
25*xabs = 88803
A
w5190
88811 >= 25*xabs
25*xabs = 88811
B
w5191
17763 >= 5*xabs
5*xabs = 17763
A
w5192
88823 >= 25*xabs

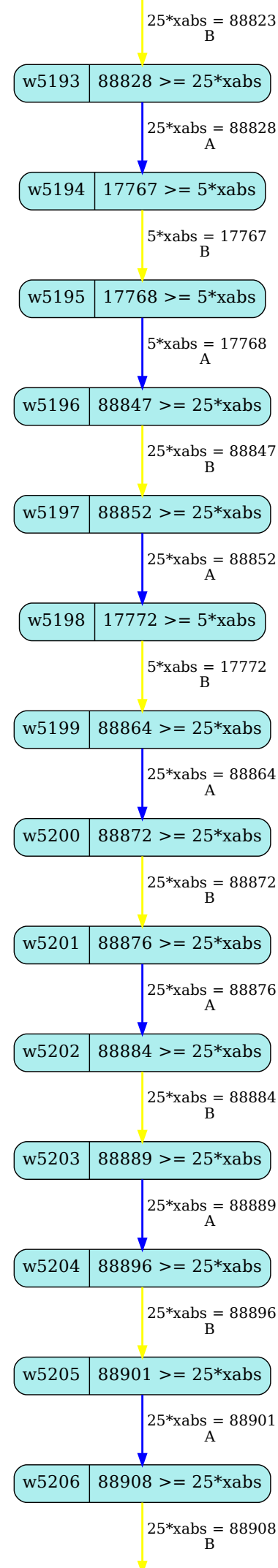
25*xabs = 88823
B
w5193
88828 >= 25*xabs
25*xabs = 88828
A
w5194
17767 >= 5*xabs
5*xabs = 17767
B
w5195
17768 >= 5*xabs
5*xabs = 17768
A
w5196
88847 >= 25*xabs
25*xabs = 88847
B
w5197
88852 >= 25*xabs
25*xabs = 88852
A
w5198
17772 >= 5*xabs
5*xabs = 17772
B
w5199
88864 >= 25*xabs
25*xabs = 88864
A
w5200
88872 >= 25*xabs
25*xabs = 88872
B
w5201
88876 >= 25*xabs
25*xabs = 88876
A
w5202
88884 >= 25*xabs
25*xabs = 88884
B
w5203
88889 >= 25*xabs
25*xabs = 88889
A
w5204
88896 >= 25*xabs
25*xabs = 88896
B
w5205
88901 >= 25*xabs
25*xabs = 88901
A
w5206
88908 >= 25*xabs
25*xabs = 88908
B

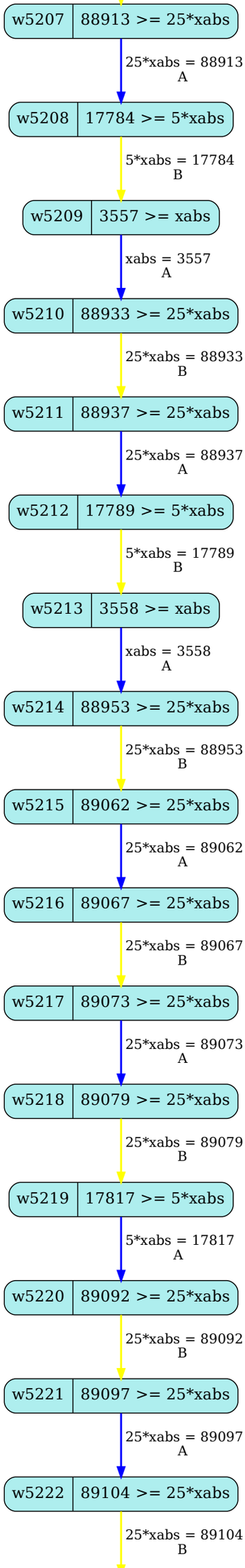
w5207
88913 >= 25*xabs
25*xabs = 88913
A
w5208
17784 >= 5*xabs
5*xabs = 17784
B
w5209
3557 >= xabs
xabs = 3557
A
w5210
88933 >= 25*xabs
25*xabs = 88933
B
w5211
88937 >= 25*xabs
25*xabs = 88937
A
w5212
17789 >= 5*xabs
5*xabs = 17789
B
w5213
3558 >= xabs
xabs = 3558
A
w5214
88953 >= 25*xabs
25*xabs = 88953
B
w5215
89062 >= 25*xabs
25*xabs = 89062
A
w5216
89067 >= 25*xabs
25*xabs = 89067
B
w5217
89073 >= 25*xabs
25*xabs = 89073
A
w5218
89079 >= 25*xabs
25*xabs = 89079
B
w5219
17817 >= 5*xabs
5*xabs = 17817
A
w5220
89092 >= 25*xabs
25*xabs = 89092
B
w5221
89097 >= 25*xabs
25*xabs = 89097
A
w5222
89104 >= 25*xabs
25*xabs = 89104
B

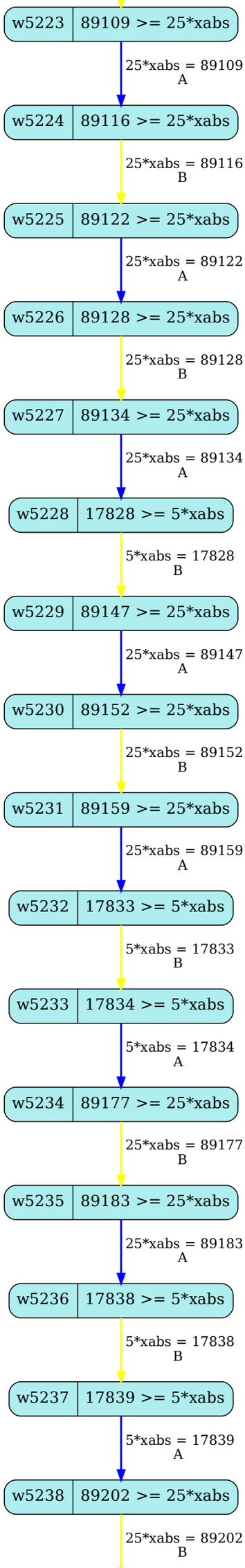
w5223
89109 >= 25*xabs
25*xabs = 89109
A
w5224
89116 >= 25*xabs
25*xabs = 89116
B
w5225
89122 >= 25*xabs
25*xabs = 89122
A
w5226
89128 >= 25*xabs
25*xabs = 89128
B
w5227
89134 >= 25*xabs
25*xabs = 89134
A
w5228
17828 >= 5*xabs
5*xabs = 17828
B
w5229
89147 >= 25*xabs
25*xabs = 89147
A
w5230
89152 >= 25*xabs
25*xabs = 89152
B
w5231
89159 >= 25*xabs
25*xabs = 89159
A
w5232
17833 >= 5*xabs
5*xabs = 17833
B
w5233
17834 >= 5*xabs
5*xabs = 17834
A
w5234
89177 >= 25*xabs
25*xabs = 89177
B
w5235
89183 >= 25*xabs
25*xabs = 89183
A
w5236
17838 >= 5*xabs
5*xabs = 17838
B
w5237
17839 >= 5*xabs
5*xabs = 17839
A
w5238
89202 >= 25*xabs
25*xabs = 89202
B

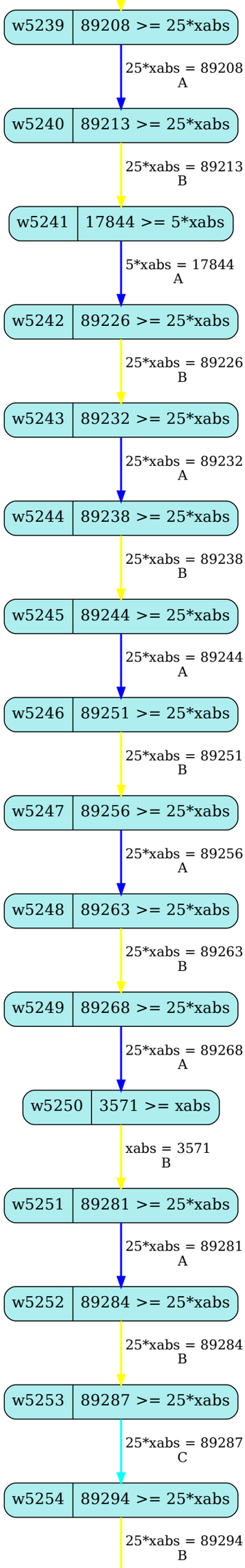
w5239
89208 >= 25*xabs
25*xabs = 89208
A
w5240
89213 >= 25*xabs
25*xabs = 89213
B
w5241
17844 >= 5*xabs
5*xabs = 17844
A
w5242
89226 >= 25*xabs
25*xabs = 89226
B
w5243
89232 >= 25*xabs
25*xabs = 89232
A
w5244
89238 >= 25*xabs
25*xabs = 89238
B
w5245
89244 >= 25*xabs
25*xabs = 89244
A
w5246
89251 >= 25*xabs
25*xabs = 89251
B
w5247
89256 >= 25*xabs
25*xabs = 89256
A
w5248
89263 >= 25*xabs
25*xabs = 89263
B
w5249
89268 >= 25*xabs
25*xabs = 89268
A
w5250
3571 >= xabs
xabs = 3571
B
w5251
89281 >= 25*xabs
25*xabs = 89281
A
w5252
89284 >= 25*xabs
25*xabs = 89284
B
w5253
89287 >= 25*xabs
25*xabs = 89287
C
w5254
89294 >= 25*xabs
25*xabs = 89294
B

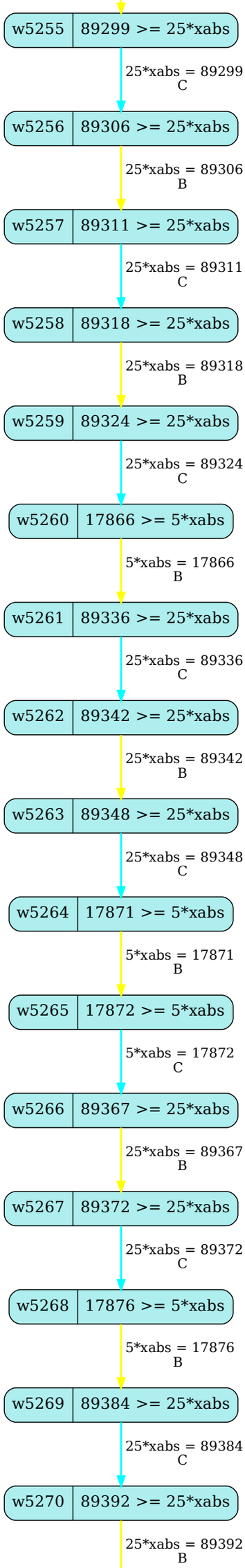
w5255
89299 >= 25*xabs
25*xabs = 89299
C
w5256
89306 >= 25*xabs
25*xabs = 89306
B
w5257
89311 >= 25*xabs
25*xabs = 89311
C
w5258
89318 >= 25*xabs
25*xabs = 89318
B
w5259
89324 >= 25*xabs
25*xabs = 89324
C
w5260
17866 >= 5*xabs
5*xabs = 17866
B
w5261
89336 >= 25*xabs
25*xabs = 89336
C
w5262
89342 >= 25*xabs
25*xabs = 89342
B
w5263
89348 >= 25*xabs
25*xabs = 89348
C
w5264
17871 >= 5*xabs
5*xabs = 17871
B
w5265
17872 >= 5*xabs
5*xabs = 17872
C
w5266
89367 >= 25*xabs
25*xabs = 89367
B
w5267
89372 >= 25*xabs
25*xabs = 89372
C
w5268
17876 >= 5*xabs
5*xabs = 17876
B
w5269
89384 >= 25*xabs
25*xabs = 89384
C
w5270
89392 >= 25*xabs
25*xabs = 89392
B

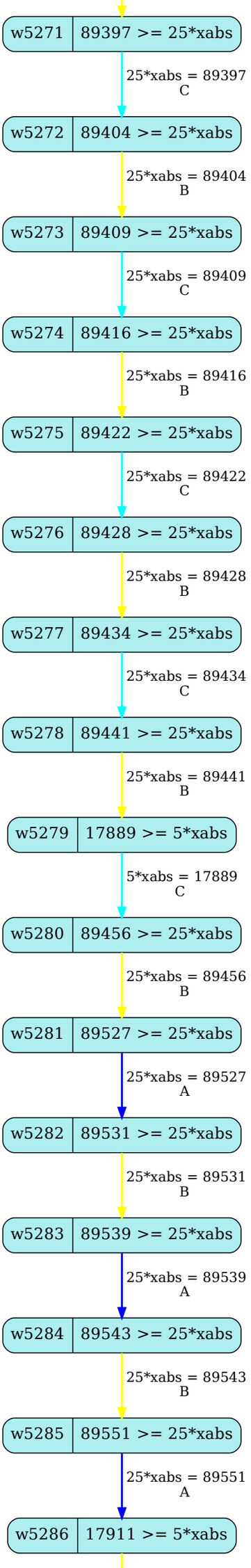
w5271
89397 >= 25*xabs
25*xabs = 89397
C
w5272
89404 >= 25*xabs
25*xabs = 89404
B
w5273
89409 >= 25*xabs
25*xabs = 89409
C
w5274
89416 >= 25*xabs
25*xabs = 89416
B
w5275
89422 >= 25*xabs
25*xabs = 89422
C
w5276
89428 >= 25*xabs
25*xabs = 89428
B
w5277
89434 >= 25*xabs
25*xabs = 89434
C
w5278
89441 >= 25*xabs
25*xabs = 89441
B
w5279
17889 >= 5*xabs
5*xabs = 17889
C
w5280
89456 >= 25*xabs
25*xabs = 89456
B
w5281
89527 >= 25*xabs
25*xabs = 89527
A
w5282
89531 >= 25*xabs
25*xabs = 89531
B
w5283
89539 >= 25*xabs
25*xabs = 89539
A
w5284
89543 >= 25*xabs
25*xabs = 89543
B
w5285
89551 >= 25*xabs
25*xabs = 89551
A
w5286
17911 >= 5*xabs

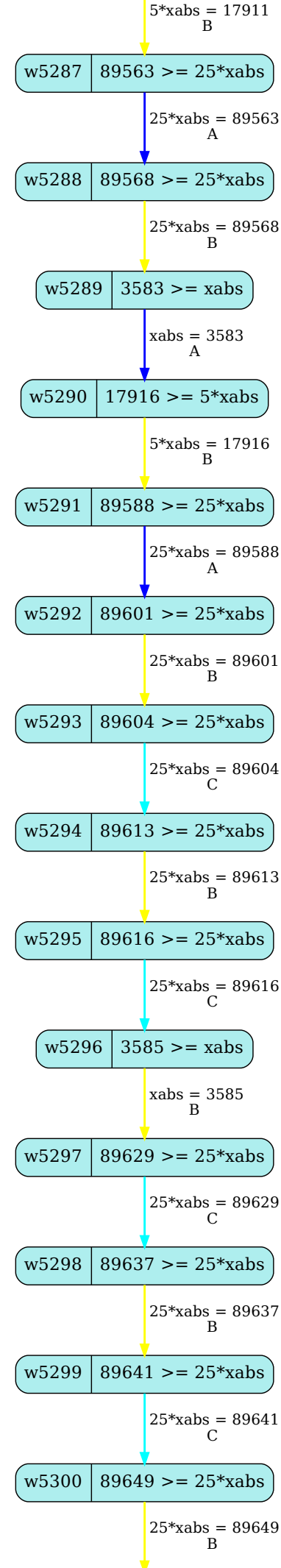
5*xabs = 17911
B
w5287
89563 >= 25*xabs
25*xabs = 89563
A
w5288
89568 >= 25*xabs
25*xabs = 89568
B
w5289
3583 >= xabs
xabs = 3583
A
w5290
17916 >= 5*xabs
5*xabs = 17916
B
w5291
89588 >= 25*xabs
25*xabs = 89588
A
w5292
89601 >= 25*xabs
25*xabs = 89601
B
w5293
89604 >= 25*xabs
25*xabs = 89604
C
w5294
89613 >= 25*xabs
25*xabs = 89613
B
w5295
89616 >= 25*xabs
25*xabs = 89616
C
w5296
3585 >= xabs
xabs = 3585
B
w5297
89629 >= 25*xabs
25*xabs = 89629
C
w5298
89637 >= 25*xabs
25*xabs = 89637
B
w5299
89641 >= 25*xabs
25*xabs = 89641
C
w5300
89649 >= 25*xabs
25*xabs = 89649
B

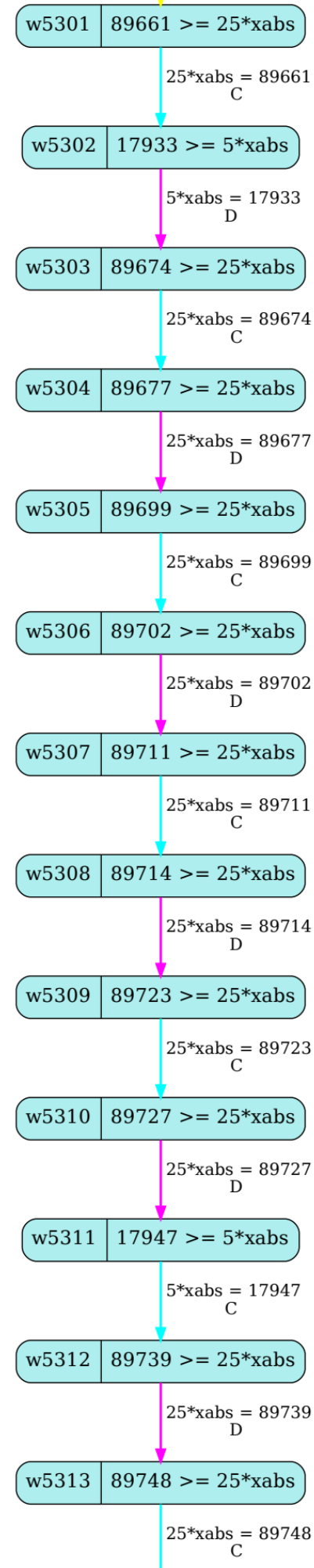
w5301
89661 >= 25*xabs
25*xabs = 89661
C
w5302
17933 >= 5*xabs
5*xabs = 17933
D
w5303
89674 >= 25*xabs
25*xabs = 89674
C
w5304
89677 >= 25*xabs
25*xabs = 89677
D
w5305
89699 >= 25*xabs
25*xabs = 89699
C
w5306
89702 >= 25*xabs
25*xabs = 89702
D
w5307
89711 >= 25*xabs
25*xabs = 89711
C
w5308
89714 >= 25*xabs
25*xabs = 89714
D
w5309
89723 >= 25*xabs
25*xabs = 89723
C
w5310
89727 >= 25*xabs
25*xabs = 89727
D
w5311
17947 >= 5*xabs
5*xabs = 17947
C
w5312
89739 >= 25*xabs
25*xabs = 89739
D
w5313
89748 >= 25*xabs
25*xabs = 89748
C

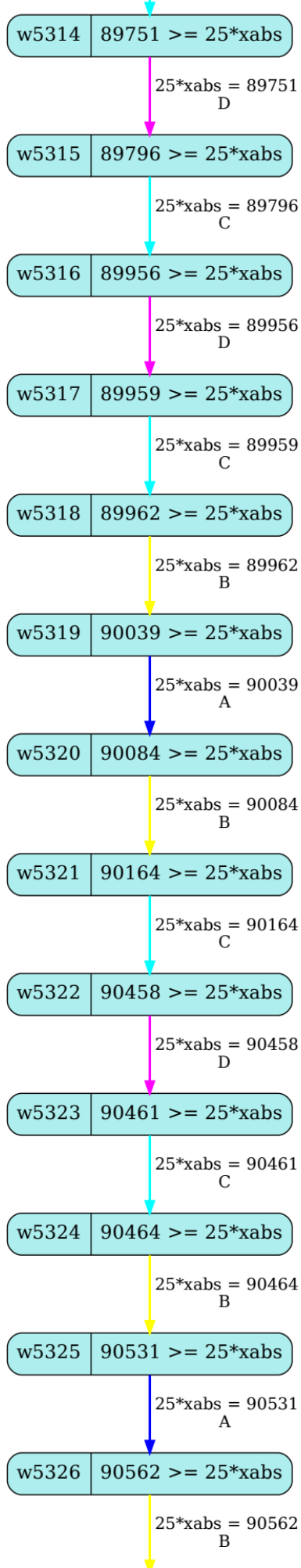
w5314
89751 >= 25*xabs
25*xabs = 89751
D
w5315
89796 >= 25*xabs
25*xabs = 89796
C
w5316
89956 >= 25*xabs
25*xabs = 89956
D
w5317
89959 >= 25*xabs
25*xabs = 89959
C
w5318
89962 >= 25*xabs
25*xabs = 89962
B
w5319
90039 >= 25*xabs
25*xabs = 90039
A
w5320
90084 >= 25*xabs
25*xabs = 90084
B
w5321
90164 >= 25*xabs
25*xabs = 90164
C
w5322
90458 >= 25*xabs
25*xabs = 90458
D
w5323
90461 >= 25*xabs
25*xabs = 90461
C
w5324
90464 >= 25*xabs
25*xabs = 90464
B
w5325
90531 >= 25*xabs
25*xabs = 90531
A
w5326
90562 >= 25*xabs
25*xabs = 90562
B

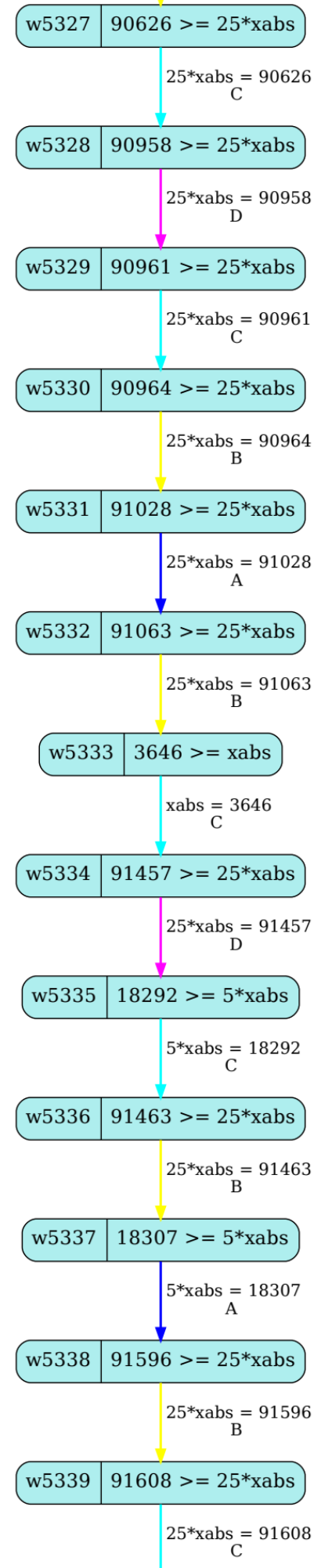
w5327
90626 >= 25*xabs
25*xabs = 90626
C
w5328
90958 >= 25*xabs
25*xabs = 90958
D
w5329
90961 >= 25*xabs
25*xabs = 90961
C
w5330
90964 >= 25*xabs
25*xabs = 90964
B
w5331
91028 >= 25*xabs
25*xabs = 91028
A
w5332
91063 >= 25*xabs
25*xabs = 91063
B
w5333
3646 >= xabs
xabs = 3646
C
w5334
91457 >= 25*xabs
25*xabs = 91457
D
w5335
18292 >= 5*xabs
5*xabs = 18292
C
w5336
91463 >= 25*xabs
25*xabs = 91463
B
w5337
18307 >= 5*xabs
5*xabs = 18307
A
w5338
91596 >= 25*xabs
25*xabs = 91596
B
w5339
91608 >= 25*xabs
25*xabs = 91608
C

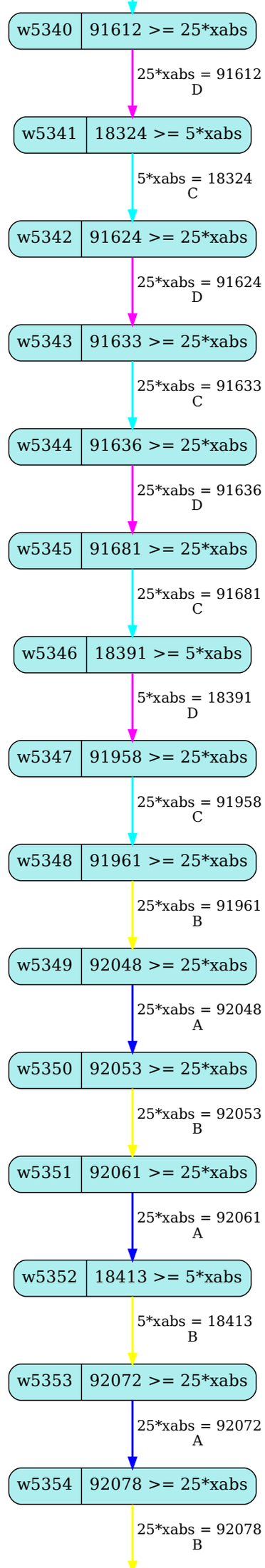
w5340
91612 >= 25*xabs
25*xabs = 91612
D
w5341
18324 >= 5*xabs
5*xabs = 18324
C
w5342
91624 >= 25*xabs
25*xabs = 91624
D
w5343
91633 >= 25*xabs
25*xabs = 91633
C
w5344
91636 >= 25*xabs
25*xabs = 91636
D
w5345
91681 >= 25*xabs
25*xabs = 91681
C
w5346
18391 >= 5*xabs
5*xabs = 18391
D
w5347
91958 >= 25*xabs
25*xabs = 91958
C
w5348
91961 >= 25*xabs
25*xabs = 91961
B
w5349
92048 >= 25*xabs
25*xabs = 92048
A
w5350
92053 >= 25*xabs
25*xabs = 92053
B
w5351
92061 >= 25*xabs
25*xabs = 92061
A
w5352
18413 >= 5*xabs
5*xabs = 18413
B
w5353
92072 >= 25*xabs
25*xabs = 92072
A
w5354
92078 >= 25*xabs
25*xabs = 92078
B

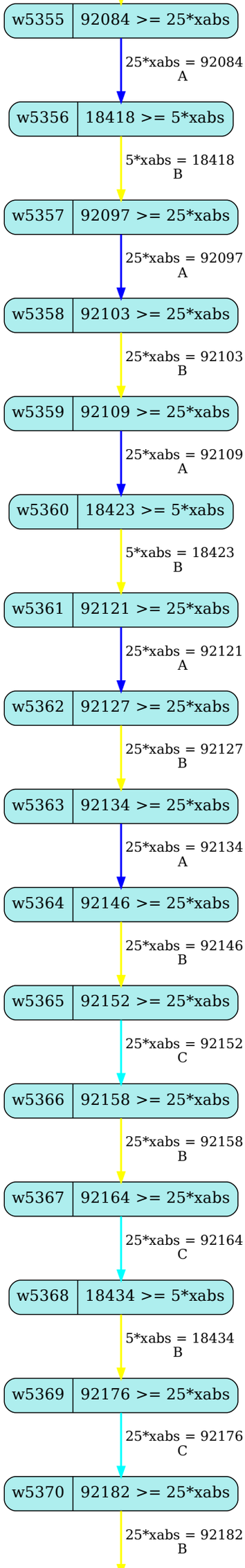
w5355
92084 >= 25*xabs
25*xabs = 92084
A
w5356
18418 >= 5*xabs
5*xabs = 18418
B
w5357
92097 >= 25*xabs
25*xabs = 92097
A
w5358
92103 >= 25*xabs
25*xabs = 92103
B
w5359
92109 >= 25*xabs
25*xabs = 92109
A
w5360
18423 >= 5*xabs
5*xabs = 18423
B
w5361
92121 >= 25*xabs
25*xabs = 92121
A
w5362
92127 >= 25*xabs
25*xabs = 92127
B
w5363
92134 >= 25*xabs
25*xabs = 92134
A
w5364
92146 >= 25*xabs
25*xabs = 92146
B
w5365
92152 >= 25*xabs
25*xabs = 92152
C
w5366
92158 >= 25*xabs
25*xabs = 92158
B
w5367
92164 >= 25*xabs
25*xabs = 92164
C
w5368
18434 >= 5*xabs
5*xabs = 18434
B
w5369
92176 >= 25*xabs
25*xabs = 92176
C
w5370
92182 >= 25*xabs
25*xabs = 92182
B

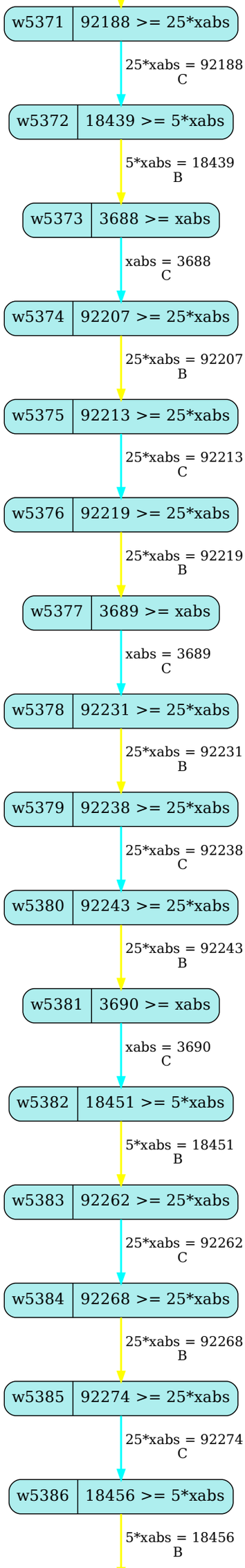
w5371
92188 >= 25*xabs
25*xabs = 92188
C
w5372
18439 >= 5*xabs
5*xabs = 18439
B
w5373
3688 >= xabs
xabs = 3688
C
w5374
92207 >= 25*xabs
25*xabs = 92207
B
w5375
92213 >= 25*xabs
25*xabs = 92213
C
w5376
92219 >= 25*xabs
25*xabs = 92219
B
w5377
3689 >= xabs
xabs = 3689
C
w5378
92231 >= 25*xabs
25*xabs = 92231
B
w5379
92238 >= 25*xabs
25*xabs = 92238
C
w5380
92243 >= 25*xabs
25*xabs = 92243
B
w5381
3690 >= xabs
xabs = 3690
C
w5382
18451 >= 5*xabs
5*xabs = 18451
B
w5383
92262 >= 25*xabs
25*xabs = 92262
C
w5384
92268 >= 25*xabs
25*xabs = 92268
B
w5385
92274 >= 25*xabs
25*xabs = 92274
C
w5386
18456 >= 5*xabs
5*xabs = 18456
B

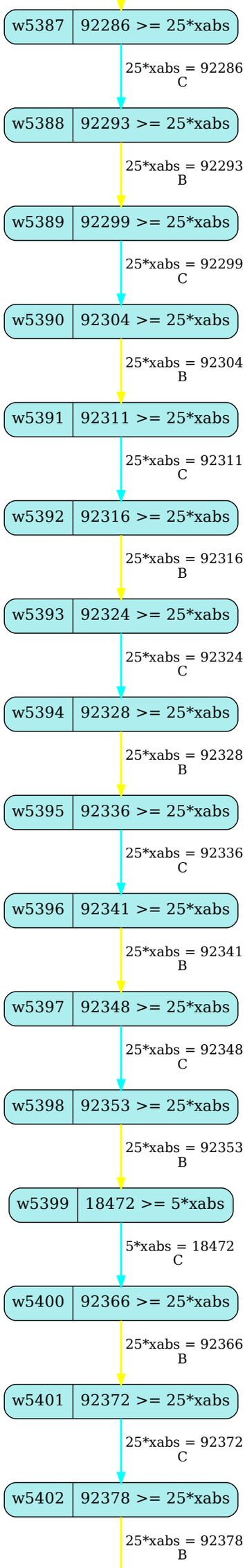
w5387
92286 >= 25*xabs
25*xabs = 92286
C
w5388
92293 >= 25*xabs
25*xabs = 92293
B
w5389
92299 >= 25*xabs
25*xabs = 92299
C
w5390
92304 >= 25*xabs
25*xabs = 92304
B
w5391
92311 >= 25*xabs
25*xabs = 92311
C
w5392
92316 >= 25*xabs
25*xabs = 92316
B
w5393
92324 >= 25*xabs
25*xabs = 92324
C
w5394
92328 >= 25*xabs
25*xabs = 92328
B
w5395
92336 >= 25*xabs
25*xabs = 92336
C
w5396
92341 >= 25*xabs
25*xabs = 92341
B
w5397
92348 >= 25*xabs
25*xabs = 92348
C
w5398
92353 >= 25*xabs
25*xabs = 92353
B
w5399
18472 >= 5*xabs
5*xabs = 18472
C
w5400
92366 >= 25*xabs
25*xabs = 92366
B
w5401
92372 >= 25*xabs
25*xabs = 92372
C
w5402
92378 >= 25*xabs
25*xabs = 92378
B

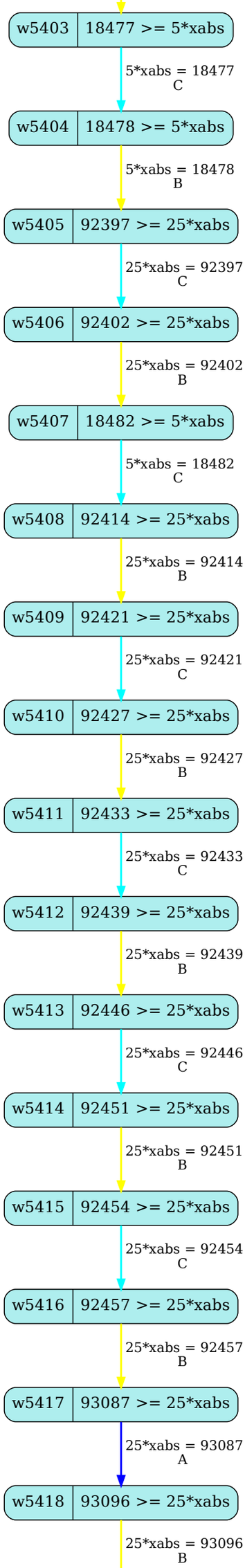
w5403
18477 >= 5*xabs
5*xabs = 18477
C
w5404
18478 >= 5*xabs
5*xabs = 18478
B
w5405
92397 >= 25*xabs
25*xabs = 92397
C
w5406
92402 >= 25*xabs
25*xabs = 92402
B
w5407
18482 >= 5*xabs
5*xabs = 18482
C
w5408
92414 >= 25*xabs
25*xabs = 92414
B
w5409
92421 >= 25*xabs
25*xabs = 92421
C
w5410
92427 >= 25*xabs
25*xabs = 92427
B
w5411
92433 >= 25*xabs
25*xabs = 92433
C
w5412
92439 >= 25*xabs
25*xabs = 92439
B
w5413
92446 >= 25*xabs
25*xabs = 92446
C
w5414
92451 >= 25*xabs
25*xabs = 92451
B
w5415
92454 >= 25*xabs
25*xabs = 92454
C
w5416
92457 >= 25*xabs
25*xabs = 92457
B
w5417
93087 >= 25*xabs
25*xabs = 93087
A
w5418
93096 >= 25*xabs
25*xabs = 93096
B

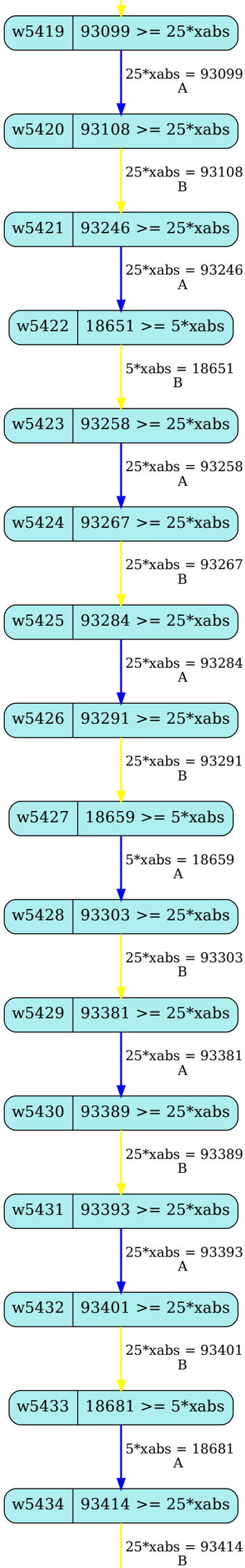
w5419
93099 >= 25*xabs
25*xabs = 93099
A
w5420
93108 >= 25*xabs
25*xabs = 93108
B
w5421
93246 >= 25*xabs
25*xabs = 93246
A
w5422
18651 >= 5*xabs
5*xabs = 18651
B
w5423
93258 >= 25*xabs
25*xabs = 93258
A
w5424
93267 >= 25*xabs
25*xabs = 93267
B
w5425
93284 >= 25*xabs
25*xabs = 93284
A
w5426
93291 >= 25*xabs
25*xabs = 93291
B
w5427
18659 >= 5*xabs
5*xabs = 18659
A
w5428
93303 >= 25*xabs
25*xabs = 93303
B
w5429
93381 >= 25*xabs
25*xabs = 93381
A
w5430
93389 >= 25*xabs
25*xabs = 93389
B
w5431
93393 >= 25*xabs
25*xabs = 93393
A
w5432
93401 >= 25*xabs
25*xabs = 93401
B
w5433
18681 >= 5*xabs
5*xabs = 18681
A
w5434
93414 >= 25*xabs
25*xabs = 93414
B

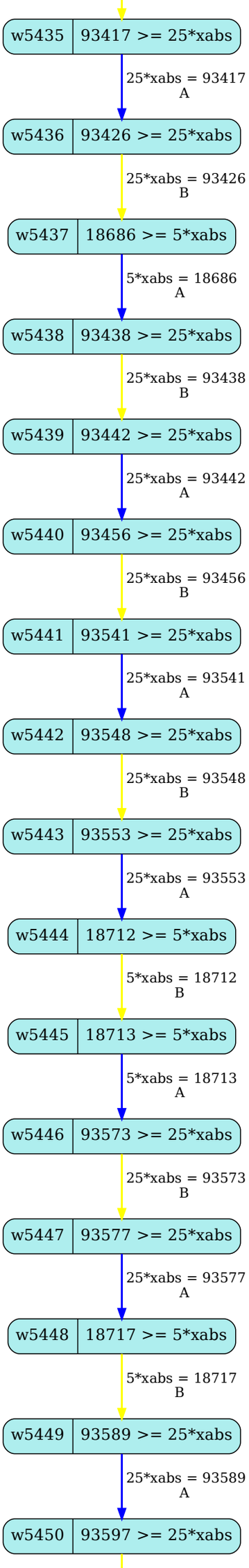
w5435
93417 >= 25*xabs
25*xabs = 93417
A
w5436
93426 >= 25*xabs
25*xabs = 93426
B
w5437
18686 >= 5*xabs
5*xabs = 18686
A
w5438
93438 >= 25*xabs
25*xabs = 93438
B
w5439
93442 >= 25*xabs
25*xabs = 93442
A
w5440
93456 >= 25*xabs
25*xabs = 93456
B
w5441
93541 >= 25*xabs
25*xabs = 93541
A
w5442
93548 >= 25*xabs
25*xabs = 93548
B
w5443
93553 >= 25*xabs
25*xabs = 93553
A
w5444
18712 >= 5*xabs
5*xabs = 18712
B
w5445
18713 >= 5*xabs
5*xabs = 18713
A
w5446
93573 >= 25*xabs
25*xabs = 93573
B
w5447
93577 >= 25*xabs
25*xabs = 93577
A
w5448
18717 >= 5*xabs
5*xabs = 18717
B
w5449
93589 >= 25*xabs
25*xabs = 93589
A
w5450
93597 >= 25*xabs

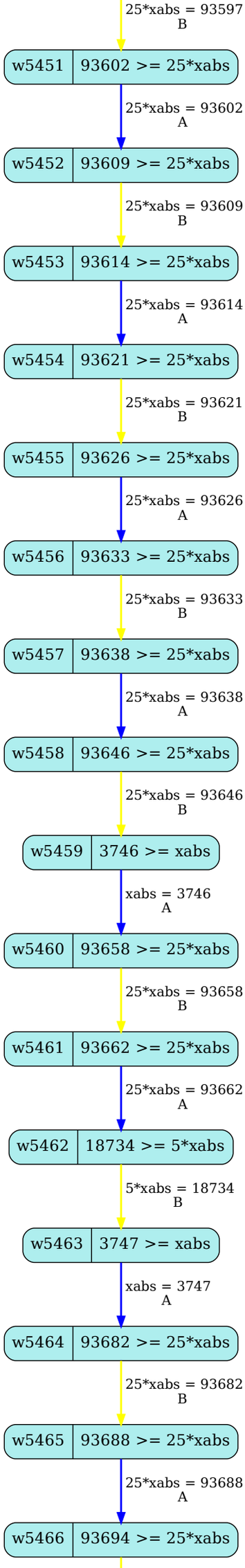
25*xabs = 93597
B
w5451
93602 >= 25*xabs
25*xabs = 93602
A
w5452
93609 >= 25*xabs
25*xabs = 93609
B
w5453
93614 >= 25*xabs
25*xabs = 93614
A
w5454
93621 >= 25*xabs
25*xabs = 93621
B
w5455
93626 >= 25*xabs
25*xabs = 93626
A
w5456
93633 >= 25*xabs
25*xabs = 93633
B
w5457
93638 >= 25*xabs
25*xabs = 93638
A
w5458
93646 >= 25*xabs
25*xabs = 93646
B
w5459
3746 >= xabs
xabs = 3746
A
w5460
93658 >= 25*xabs
25*xabs = 93658
B
w5461
93662 >= 25*xabs
25*xabs = 93662
A
w5462
18734 >= 5*xabs
5*xabs = 18734
B
w5463
3747 >= xabs
xabs = 3747
A
w5464
93682 >= 25*xabs
25*xabs = 93682
B
w5465
93688 >= 25*xabs
25*xabs = 93688
A
w5466
93694 >= 25*xabs

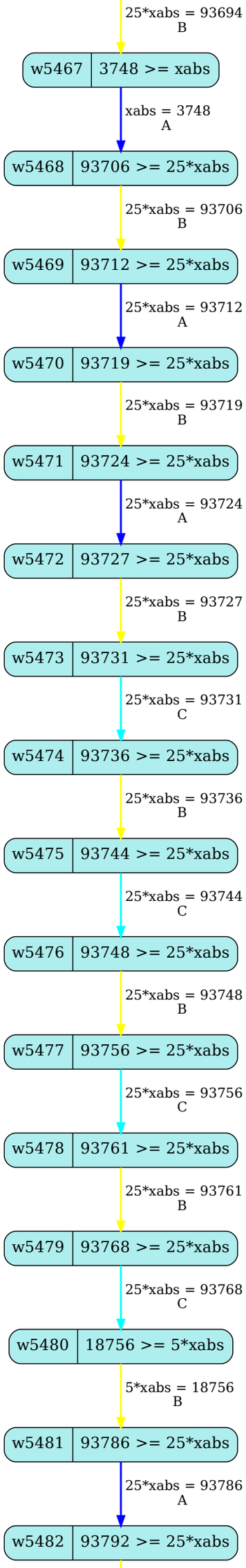
25*xabs = 93694
B
w5467
3748 >= xabs
xabs = 3748
A
w5468
93706 >= 25*xabs
25*xabs = 93706
B
w5469
93712 >= 25*xabs
25*xabs = 93712
A
w5470
93719 >= 25*xabs
25*xabs = 93719
B
w5471
93724 >= 25*xabs
25*xabs = 93724
A
w5472
93727 >= 25*xabs
25*xabs = 93727
B
w5473
93731 >= 25*xabs
25*xabs = 93731
C
w5474
93736 >= 25*xabs
25*xabs = 93736
B
w5475
93744 >= 25*xabs
25*xabs = 93744
C
w5476
93748 >= 25*xabs
25*xabs = 93748
B
w5477
93756 >= 25*xabs
25*xabs = 93756
C
w5478
93761 >= 25*xabs
25*xabs = 93761
B
w5479
93768 >= 25*xabs
25*xabs = 93768
C
w5480
18756 >= 5*xabs
5*xabs = 18756
B
w5481
93786 >= 25*xabs
25*xabs = 93786
A
w5482
93792 >= 25*xabs

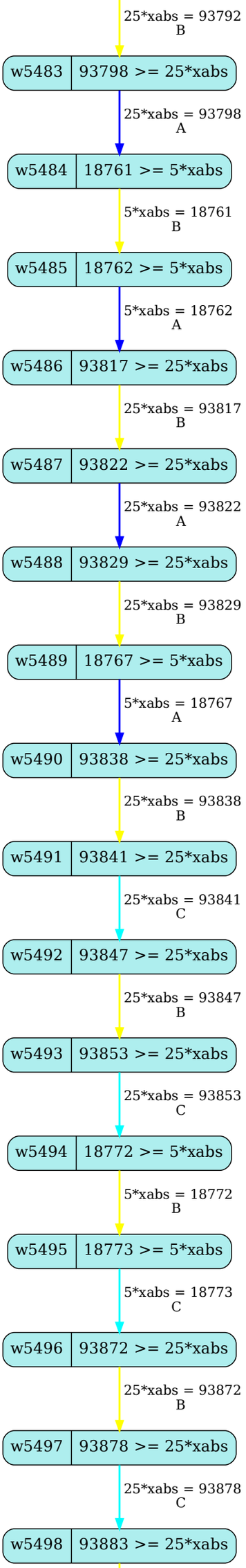
25*xabs = 93792
B
w5483
93798 >= 25*xabs
25*xabs = 93798
A
w5484
18761 >= 5*xabs
5*xabs = 18761
B
w5485
18762 >= 5*xabs
5*xabs = 18762
A
w5486
93817 >= 25*xabs
25*xabs = 93817
B
w5487
93822 >= 25*xabs
25*xabs = 93822
A
w5488
93829 >= 25*xabs
25*xabs = 93829
B
w5489
18767 >= 5*xabs
5*xabs = 18767
A
w5490
93838 >= 25*xabs
25*xabs = 93838
B
w5491
93841 >= 25*xabs
25*xabs = 93841
C
w5492
93847 >= 25*xabs
25*xabs = 93847
B
w5493
93853 >= 25*xabs
25*xabs = 93853
C
w5494
18772 >= 5*xabs
5*xabs = 18772
B
w5495
18773 >= 5*xabs
5*xabs = 18773
C
w5496
93872 >= 25*xabs
25*xabs = 93872
B
w5497
93878 >= 25*xabs
25*xabs = 93878
C
w5498
93883 >= 25*xabs

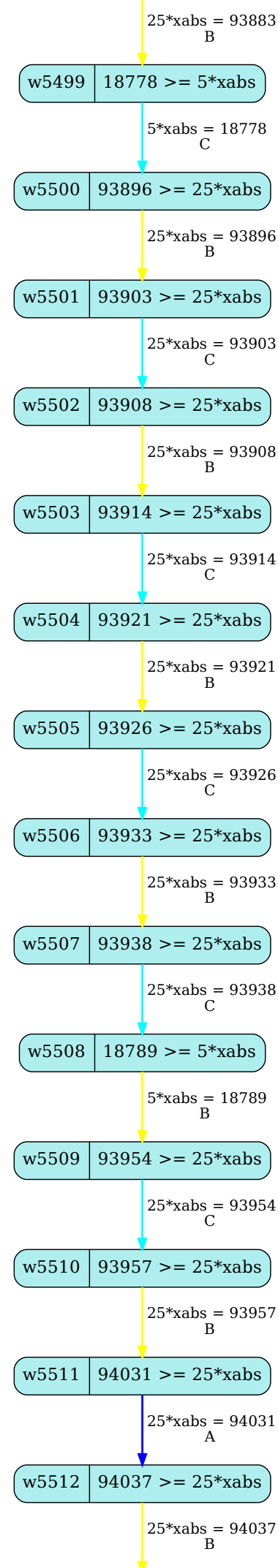
25*xabs = 93883
B
w5499
18778 >= 5*xabs
5*xabs = 18778
C
w5500
93896 >= 25*xabs
25*xabs = 93896
B
w5501
93903 >= 25*xabs
25*xabs = 93903
C
w5502
93908 >= 25*xabs
25*xabs = 93908
B
w5503
93914 >= 25*xabs
25*xabs = 93914
C
w5504
93921 >= 25*xabs
25*xabs = 93921
B
w5505
93926 >= 25*xabs
25*xabs = 93926
C
w5506
93933 >= 25*xabs
25*xabs = 93933
B
w5507
93938 >= 25*xabs
25*xabs = 93938
C
w5508
18789 >= 5*xabs
5*xabs = 18789
B
w5509
93954 >= 25*xabs
25*xabs = 93954
C
w5510
93957 >= 25*xabs
25*xabs = 93957
B
w5511
94031 >= 25*xabs
25*xabs = 94031
A
w5512
94037 >= 25*xabs
25*xabs = 94037
B

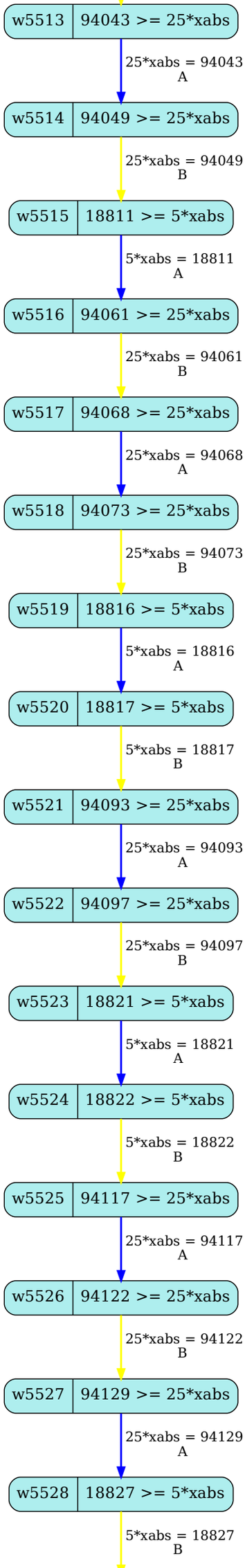
w5513
94043 >= 25*xabs
25*xabs = 94043
A
w5514
94049 >= 25*xabs
25*xabs = 94049
B
w5515
18811 >= 5*xabs
5*xabs = 18811
A
w5516
94061 >= 25*xabs
25*xabs = 94061
B
w5517
94068 >= 25*xabs
25*xabs = 94068
A
w5518
94073 >= 25*xabs
25*xabs = 94073
B
w5519
18816 >= 5*xabs
5*xabs = 18816
A
w5520
18817 >= 5*xabs
5*xabs = 18817
B
w5521
94093 >= 25*xabs
25*xabs = 94093
A
w5522
94097 >= 25*xabs
25*xabs = 94097
B
w5523
18821 >= 5*xabs
5*xabs = 18821
A
w5524
18822 >= 5*xabs
5*xabs = 18822
B
w5525
94117 >= 25*xabs
25*xabs = 94117
A
w5526
94122 >= 25*xabs
25*xabs = 94122
B
w5527
94129 >= 25*xabs
25*xabs = 94129
A
w5528
18827 >= 5*xabs
5*xabs = 18827
B

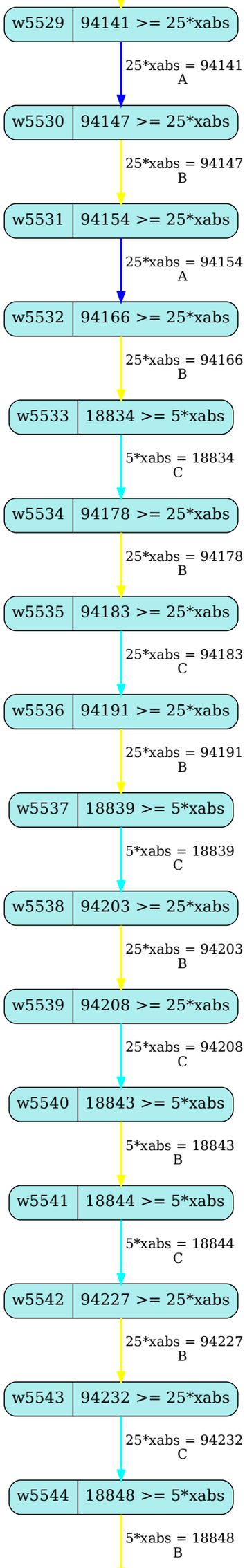
w5529
94141 >= 25*xabs
25*xabs = 94141
A
w5530
94147 >= 25*xabs
25*xabs = 94147
B
w5531
94154 >= 25*xabs
25*xabs = 94154
A
w5532
94166 >= 25*xabs
25*xabs = 94166
B
w5533
18834 >= 5*xabs
5*xabs = 18834
C
w5534
94178 >= 25*xabs
25*xabs = 94178
B
w5535
94183 >= 25*xabs
25*xabs = 94183
C
w5536
94191 >= 25*xabs
25*xabs = 94191
B
w5537
18839 >= 5*xabs
5*xabs = 18839
C
w5538
94203 >= 25*xabs
25*xabs = 94203
B
w5539
94208 >= 25*xabs
25*xabs = 94208
C
w5540
18843 >= 5*xabs
5*xabs = 18843
B
w5541
18844 >= 5*xabs
5*xabs = 18844
C
w5542
94227 >= 25*xabs
25*xabs = 94227
B
w5543
94232 >= 25*xabs
25*xabs = 94232
C
w5544
18848 >= 5*xabs
5*xabs = 18848
B

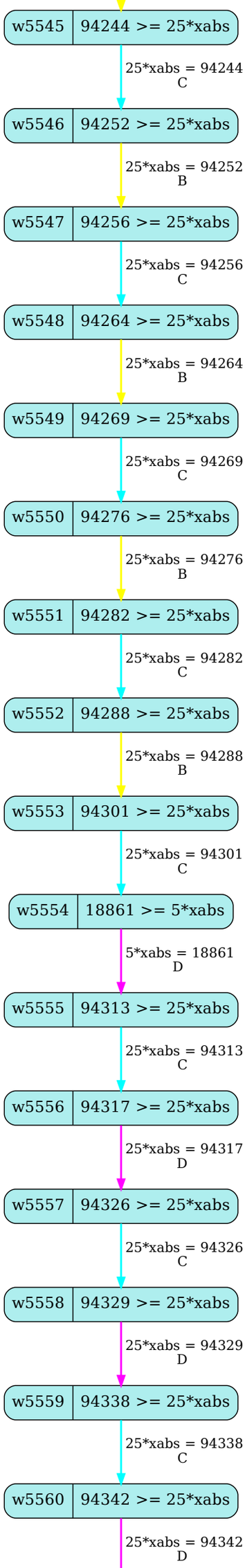
w5545
94244 >= 25*xabs
25*xabs = 94244
C
w5546
94252 >= 25*xabs
25*xabs = 94252
B
w5547
94256 >= 25*xabs
25*xabs = 94256
C
w5548
94264 >= 25*xabs
25*xabs = 94264
B
w5549
94269 >= 25*xabs
25*xabs = 94269
C
w5550
94276 >= 25*xabs
25*xabs = 94276
B
w5551
94282 >= 25*xabs
25*xabs = 94282
C
w5552
94288 >= 25*xabs
25*xabs = 94288
B
w5553
94301 >= 25*xabs
25*xabs = 94301
C
w5554
18861 >= 5*xabs
5*xabs = 18861
D
w5555
94313 >= 25*xabs
25*xabs = 94313
C
w5556
94317 >= 25*xabs
25*xabs = 94317
D
w5557
94326 >= 25*xabs
25*xabs = 94326
C
w5558
94329 >= 25*xabs
25*xabs = 94329
D
w5559
94338 >= 25*xabs
25*xabs = 94338
C
w5560
94342 >= 25*xabs
25*xabs = 94342
D

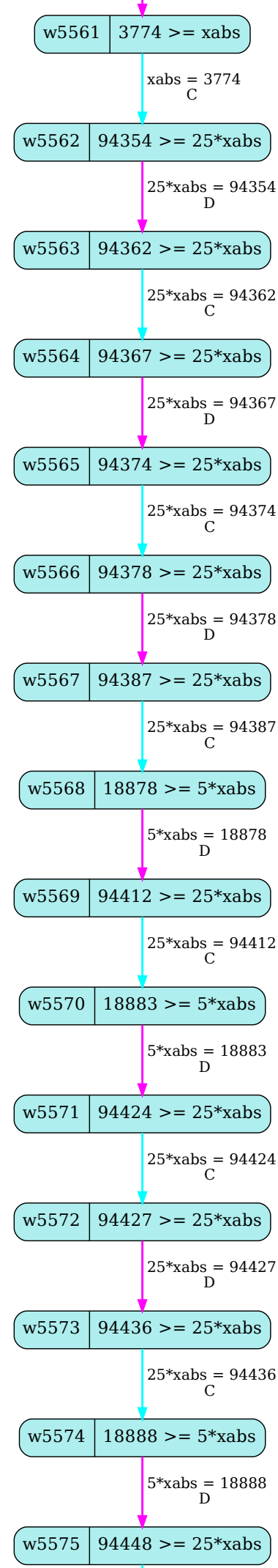
w5561
3774 >= xabs
xabs = 3774
C
w5562
94354 >= 25*xabs
25*xabs = 94354
D
w5563
94362 >= 25*xabs
25*xabs = 94362
C
w5564
94367 >= 25*xabs
25*xabs = 94367
D
w5565
94374 >= 25*xabs
25*xabs = 94374
C
w5566
94378 >= 25*xabs
25*xabs = 94378
D
w5567
94387 >= 25*xabs
25*xabs = 94387
C
w5568
18878 >= 5*xabs
5*xabs = 18878
D
w5569
94412 >= 25*xabs
25*xabs = 94412
C
w5570
18883 >= 5*xabs
5*xabs = 18883
D
w5571
94424 >= 25*xabs
25*xabs = 94424
C
w5572
94427 >= 25*xabs
25*xabs = 94427
D
w5573
94436 >= 25*xabs
25*xabs = 94436
C
w5574
18888 >= 5*xabs
5*xabs = 18888
D
w5575
94448 >= 25*xabs

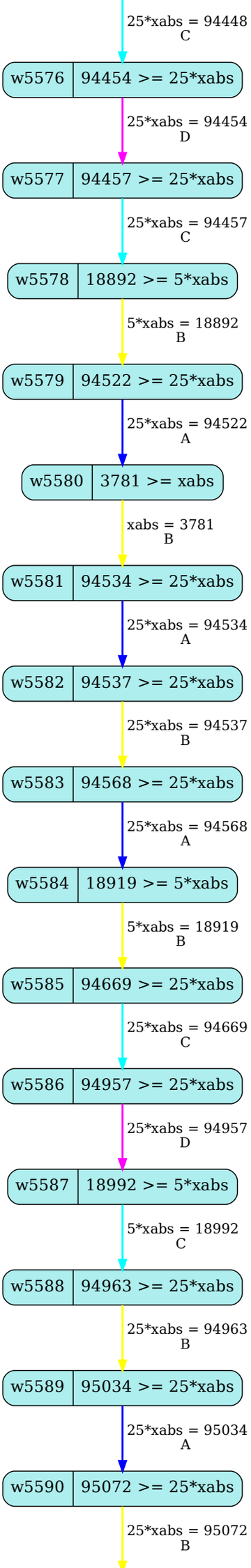
25*xabs = 94448
C
w5576
94454 >= 25*xabs
25*xabs = 94454
D
w5577
94457 >= 25*xabs
25*xabs = 94457
C
w5578
18892 >= 5*xabs
5*xabs = 18892
B
w5579
94522 >= 25*xabs
25*xabs = 94522
A
w5580
3781 >= xabs
xabs = 3781
B
w5581
94534 >= 25*xabs
25*xabs = 94534
A
w5582
94537 >= 25*xabs
25*xabs = 94537
B
w5583
94568 >= 25*xabs
25*xabs = 94568
A
w5584
18919 >= 5*xabs
5*xabs = 18919
B
w5585
94669 >= 25*xabs
25*xabs = 94669
C
w5586
94957 >= 25*xabs
25*xabs = 94957
D
w5587
18992 >= 5*xabs
5*xabs = 18992
C
w5588
94963 >= 25*xabs
25*xabs = 94963
B
w5589
95034 >= 25*xabs
25*xabs = 95034
A
w5590
95072 >= 25*xabs
25*xabs = 95072
B

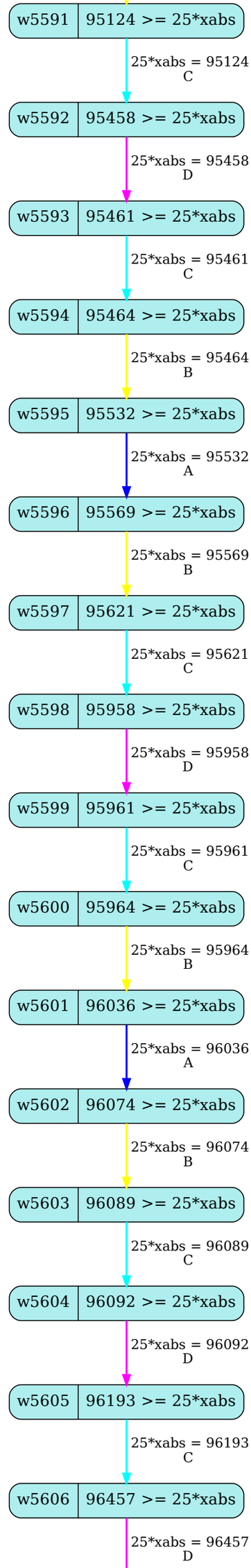
w5591
95124 >= 25*xabs
25*xabs = 95124
C
w5592
95458 >= 25*xabs
25*xabs = 95458
D
w5593
95461 >= 25*xabs
25*xabs = 95461
C
w5594
95464 >= 25*xabs
25*xabs = 95464
B
w5595
95532 >= 25*xabs
25*xabs = 95532
A
w5596
95569 >= 25*xabs
25*xabs = 95569
B
w5597
95621 >= 25*xabs
25*xabs = 95621
C
w5598
95958 >= 25*xabs
25*xabs = 95958
D
w5599
95961 >= 25*xabs
25*xabs = 95961
C
w5600
95964 >= 25*xabs
25*xabs = 95964
B
w5601
96036 >= 25*xabs
25*xabs = 96036
A
w5602
96074 >= 25*xabs
25*xabs = 96074
B
w5603
96089 >= 25*xabs
25*xabs = 96089
C
w5604
96092 >= 25*xabs
25*xabs = 96092
D
w5605
96193 >= 25*xabs
25*xabs = 96193
C
w5606
96457 >= 25*xabs
25*xabs = 96457
D

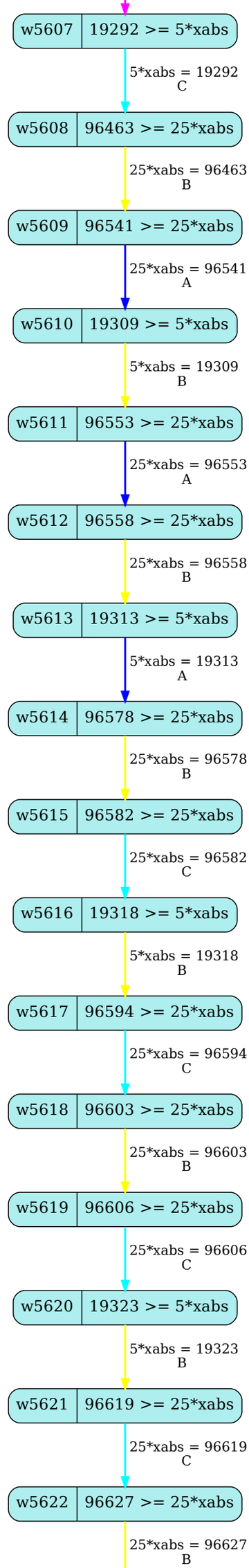
w5607
19292 >= 5*xabs
5*xabs = 19292
C
w5608
96463 >= 25*xabs
25*xabs = 96463
B
w5609
96541 >= 25*xabs
25*xabs = 96541
A
w5610
19309 >= 5*xabs
5*xabs = 19309
B
w5611
96553 >= 25*xabs
25*xabs = 96553
A
w5612
96558 >= 25*xabs
25*xabs = 96558
B
w5613
19313 >= 5*xabs
5*xabs = 19313
A
w5614
96578 >= 25*xabs
25*xabs = 96578
B
w5615
96582 >= 25*xabs
25*xabs = 96582
C
w5616
19318 >= 5*xabs
5*xabs = 19318
B
w5617
96594 >= 25*xabs
25*xabs = 96594
C
w5618
96603 >= 25*xabs
25*xabs = 96603
B
w5619
96606 >= 25*xabs
25*xabs = 96606
C
w5620
19323 >= 5*xabs
5*xabs = 19323
B
w5621
96619 >= 25*xabs
25*xabs = 96619
C
w5622
96627 >= 25*xabs
25*xabs = 96627
B

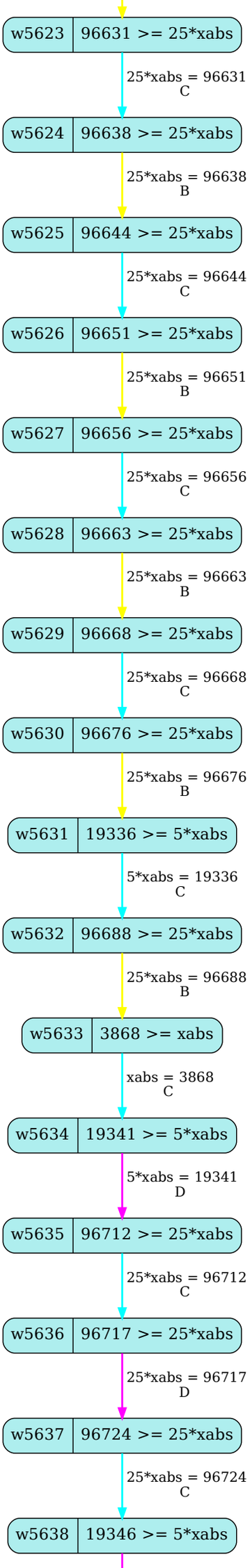
w5623
96631 >= 25*xabs
25*xabs = 96631
C
w5624
96638 >= 25*xabs
25*xabs = 96638
B
w5625
96644 >= 25*xabs
25*xabs = 96644
C
w5626
96651 >= 25*xabs
25*xabs = 96651
B
w5627
96656 >= 25*xabs
25*xabs = 96656
C
w5628
96663 >= 25*xabs
25*xabs = 96663
B
w5629
96668 >= 25*xabs
25*xabs = 96668
C
w5630
96676 >= 25*xabs
25*xabs = 96676
B
w5631
19336 >= 5*xabs
5*xabs = 19336
C
w5632
96688 >= 25*xabs
25*xabs = 96688
B
w5633
3868 >= xabs
xabs = 3868
C
w5634
19341 >= 5*xabs
5*xabs = 19341
D
w5635
96712 >= 25*xabs
25*xabs = 96712
C
w5636
96717 >= 25*xabs
25*xabs = 96717
D
w5637
96724 >= 25*xabs
25*xabs = 96724
C
w5638
19346 >= 5*xabs

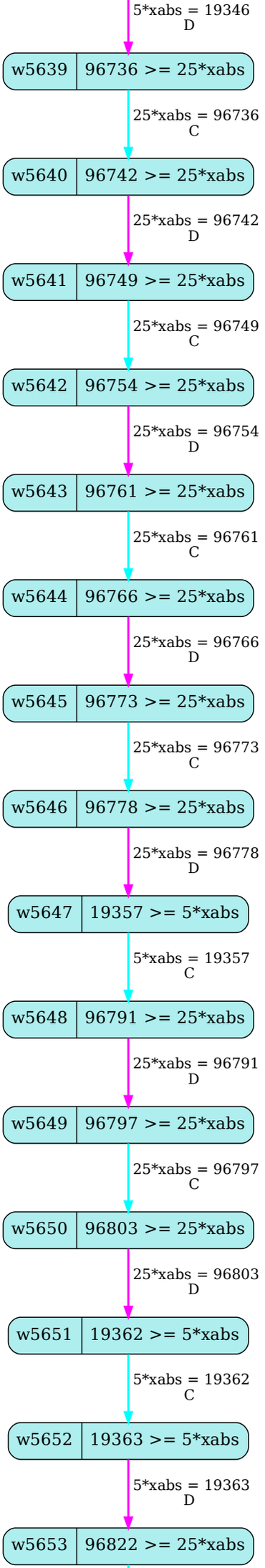
5*xabs = 19346
D
w5639
96736 >= 25*xabs
25*xabs = 96736
C
w5640
96742 >= 25*xabs
25*xabs = 96742
D
w5641
96749 >= 25*xabs
25*xabs = 96749
C
w5642
96754 >= 25*xabs
25*xabs = 96754
D
w5643
96761 >= 25*xabs
25*xabs = 96761
C
w5644
96766 >= 25*xabs
25*xabs = 96766
D
w5645
96773 >= 25*xabs
25*xabs = 96773
C
w5646
96778 >= 25*xabs
25*xabs = 96778
D
w5647
19357 >= 5*xabs
5*xabs = 19357
C
w5648
96791 >= 25*xabs
25*xabs = 96791
D
w5649
96797 >= 25*xabs
25*xabs = 96797
C
w5650
96803 >= 25*xabs
25*xabs = 96803
D
w5651
19362 >= 5*xabs
5*xabs = 19362
C
w5652
19363 >= 5*xabs
5*xabs = 19363
D
w5653
96822 >= 25*xabs

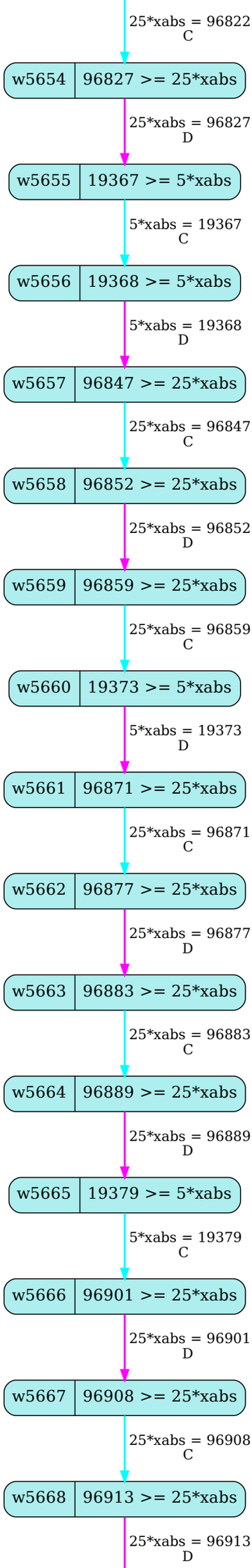
25*xabs = 96822
C
w5654
96827 >= 25*xabs
25*xabs = 96827
D
w5655
19367 >= 5*xabs
5*xabs = 19367
C
w5656
19368 >= 5*xabs
5*xabs = 19368
D
w5657
96847 >= 25*xabs
25*xabs = 96847
C
w5658
96852 >= 25*xabs
25*xabs = 96852
D
w5659
96859 >= 25*xabs
25*xabs = 96859
C
w5660
19373 >= 5*xabs
5*xabs = 19373
D
w5661
96871 >= 25*xabs
25*xabs = 96871
C
w5662
96877 >= 25*xabs
25*xabs = 96877
D
w5663
96883 >= 25*xabs
25*xabs = 96883
C
w5664
96889 >= 25*xabs
25*xabs = 96889
D
w5665
19379 >= 5*xabs
5*xabs = 19379
C
w5666
96901 >= 25*xabs
25*xabs = 96901
D
w5667
96908 >= 25*xabs
25*xabs = 96908
C
w5668
96913 >= 25*xabs
25*xabs = 96913
D

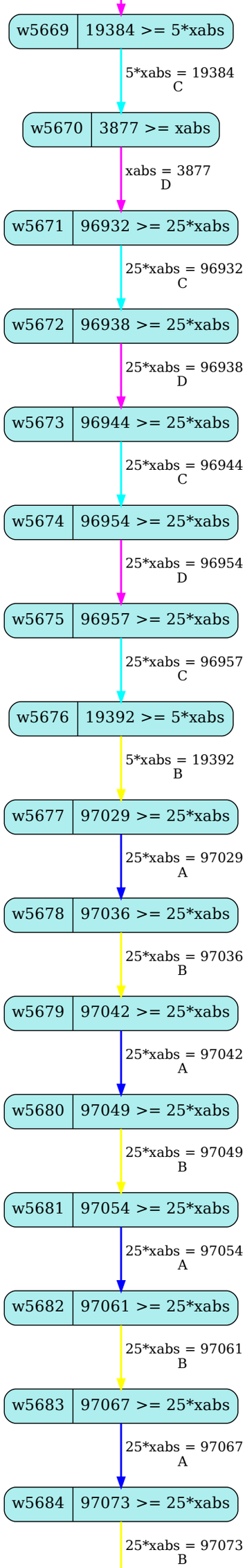
w5669
19384 >= 5*xabs
5*xabs = 19384
C
w5670
3877 >= xabs
xabs = 3877
D
w5671
96932 >= 25*xabs
25*xabs = 96932
C
w5672
96938 >= 25*xabs
25*xabs = 96938
D
w5673
96944 >= 25*xabs
25*xabs = 96944
C
w5674
96954 >= 25*xabs
25*xabs = 96954
D
w5675
96957 >= 25*xabs
25*xabs = 96957
C
w5676
19392 >= 5*xabs
5*xabs = 19392
B
w5677
97029 >= 25*xabs
25*xabs = 97029
A
w5678
97036 >= 25*xabs
25*xabs = 97036
B
w5679
97042 >= 25*xabs
25*xabs = 97042
A
w5680
97049 >= 25*xabs
25*xabs = 97049
B
w5681
97054 >= 25*xabs
25*xabs = 97054
A
w5682
97061 >= 25*xabs
25*xabs = 97061
B
w5683
97067 >= 25*xabs
25*xabs = 97067
A
w5684
97073 >= 25*xabs
25*xabs = 97073
B

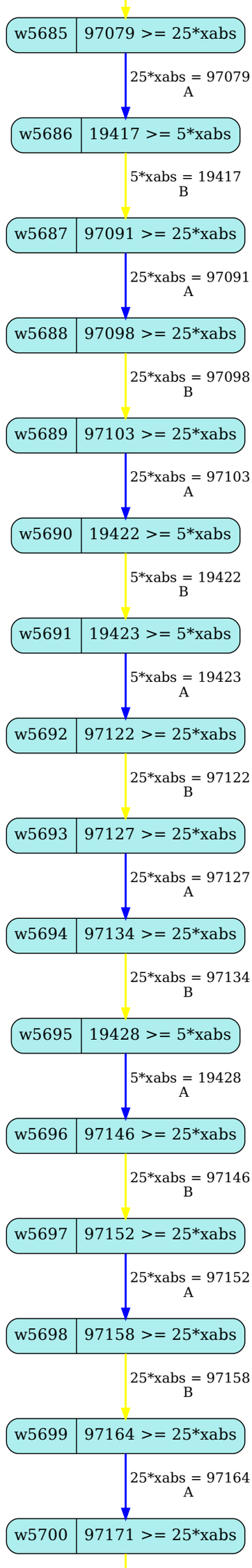
w5685
97079 >= 25*xabs
25*xabs = 97079
A
w5686
19417 >= 5*xabs
5*xabs = 19417
B
w5687
97091 >= 25*xabs
25*xabs = 97091
A
w5688
97098 >= 25*xabs
25*xabs = 97098
B
w5689
97103 >= 25*xabs
25*xabs = 97103
A
w5690
19422 >= 5*xabs
5*xabs = 19422
B
w5691
19423 >= 5*xabs
5*xabs = 19423
A
w5692
97122 >= 25*xabs
25*xabs = 97122
B
w5693
97127 >= 25*xabs
25*xabs = 97127
A
w5694
97134 >= 25*xabs
25*xabs = 97134
B
w5695
19428 >= 5*xabs
5*xabs = 19428
A
w5696
97146 >= 25*xabs
25*xabs = 97146
B
w5697
97152 >= 25*xabs
25*xabs = 97152
A
w5698
97158 >= 25*xabs
25*xabs = 97158
B
w5699
97164 >= 25*xabs
25*xabs = 97164
A
w5700
97171 >= 25*xabs

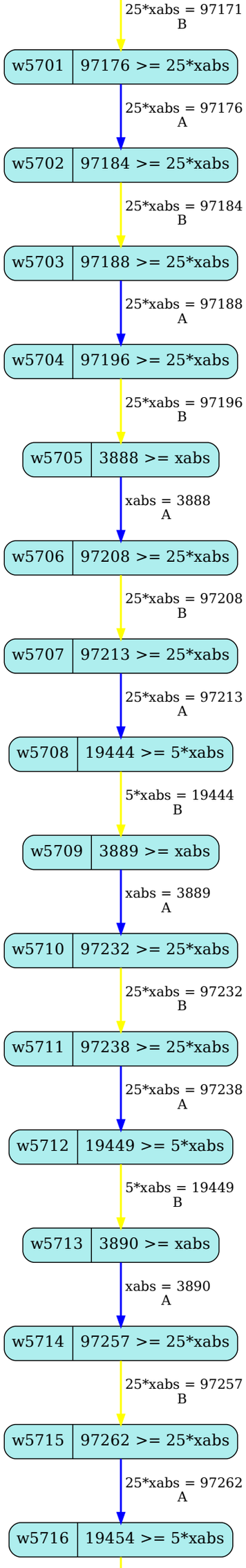
25*xabs = 97171
B
w5701
97176 >= 25*xabs
25*xabs = 97176
A
w5702
97184 >= 25*xabs
25*xabs = 97184
B
w5703
97188 >= 25*xabs
25*xabs = 97188
A
w5704
97196 >= 25*xabs
25*xabs = 97196
B
w5705
3888 >= xabs
xabs = 3888
A
w5706
97208 >= 25*xabs
25*xabs = 97208
B
w5707
97213 >= 25*xabs
25*xabs = 97213
A
w5708
19444 >= 5*xabs
5*xabs = 19444
B
w5709
3889 >= xabs
xabs = 3889
A
w5710
97232 >= 25*xabs
25*xabs = 97232
B
w5711
97238 >= 25*xabs
25*xabs = 97238
A
w5712
19449 >= 5*xabs
5*xabs = 19449
B
w5713
3890 >= xabs
xabs = 3890
A
w5714
97257 >= 25*xabs
25*xabs = 97257
B
w5715
97262 >= 25*xabs
25*xabs = 97262
A
w5716
19454 >= 5*xabs

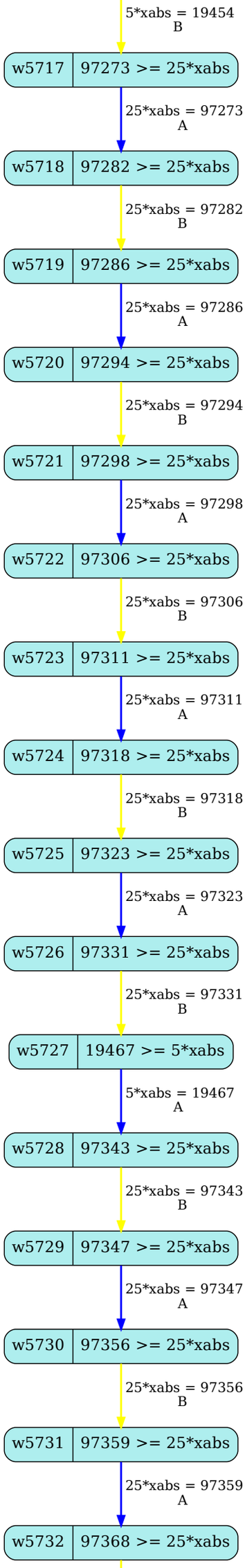
5*xabs = 19454
B
w5717
97273 >= 25*xabs
25*xabs = 97273
A
w5718
97282 >= 25*xabs
25*xabs = 97282
B
w5719
97286 >= 25*xabs
25*xabs = 97286
A
w5720
97294 >= 25*xabs
25*xabs = 97294
B
w5721
97298 >= 25*xabs
25*xabs = 97298
A
w5722
97306 >= 25*xabs
25*xabs = 97306
B
w5723
97311 >= 25*xabs
25*xabs = 97311
A
w5724
97318 >= 25*xabs
25*xabs = 97318
B
w5725
97323 >= 25*xabs
25*xabs = 97323
A
w5726
97331 >= 25*xabs
25*xabs = 97331
B
w5727
19467 >= 5*xabs
5*xabs = 19467
A
w5728
97343 >= 25*xabs
25*xabs = 97343
B
w5729
97347 >= 25*xabs
25*xabs = 97347
A
w5730
97356 >= 25*xabs
25*xabs = 97356
B
w5731
97359 >= 25*xabs
25*xabs = 97359
A
w5732
97368 >= 25*xabs

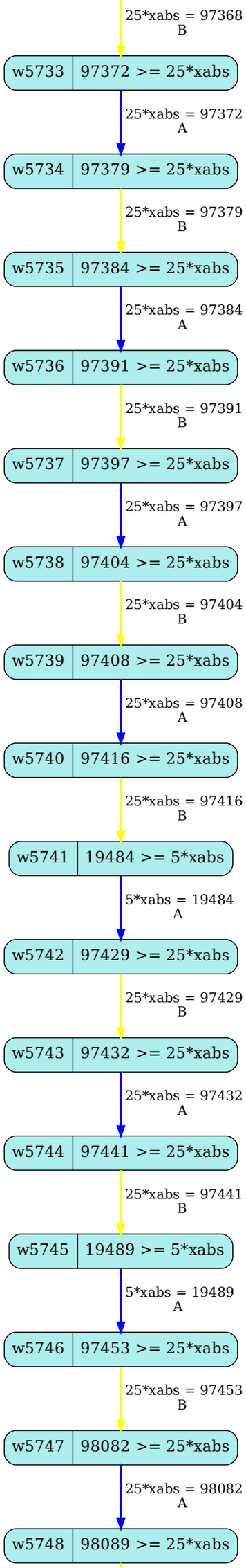
25*xabs = 97368
B
w5733
97372 >= 25*xabs
25*xabs = 97372
A
w5734
97379 >= 25*xabs
25*xabs = 97379
B
w5735
97384 >= 25*xabs
25*xabs = 97384
A
w5736
97391 >= 25*xabs
25*xabs = 97391
B
w5737
97397 >= 25*xabs
25*xabs = 97397
A
w5738
97404 >= 25*xabs
25*xabs = 97404
B
w5739
97408 >= 25*xabs
25*xabs = 97408
A
w5740
97416 >= 25*xabs
25*xabs = 97416
B
w5741
19484 >= 5*xabs
5*xabs = 19484
A
w5742
97429 >= 25*xabs
25*xabs = 97429
B
w5743
97432 >= 25*xabs
25*xabs = 97432
A
w5744
97441 >= 25*xabs
25*xabs = 97441
B
w5745
19489 >= 5*xabs
5*xabs = 19489
A
w5746
97453 >= 25*xabs
25*xabs = 97453
B
w5747
98082 >= 25*xabs
25*xabs = 98082
A
w5748
98089 >= 25*xabs

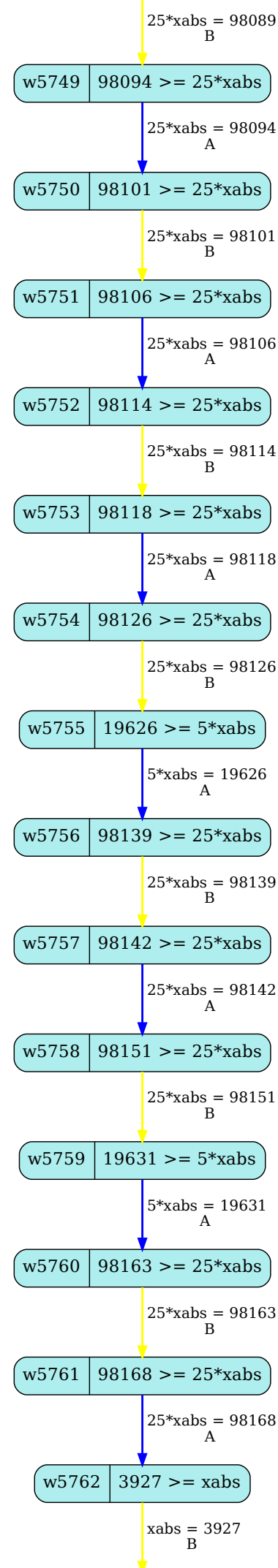
25*xabs = 98089
B
w5749
98094 >= 25*xabs
25*xabs = 98094
A
w5750
98101 >= 25*xabs
25*xabs = 98101
B
w5751
98106 >= 25*xabs
25*xabs = 98106
A
w5752
98114 >= 25*xabs
25*xabs = 98114
B
w5753
98118 >= 25*xabs
25*xabs = 98118
A
w5754
98126 >= 25*xabs
25*xabs = 98126
B
w5755
19626 >= 5*xabs
5*xabs = 19626
A
w5756
98139 >= 25*xabs
25*xabs = 98139
B
w5757
98142 >= 25*xabs
25*xabs = 98142
A
w5758
98151 >= 25*xabs
25*xabs = 98151
B
w5759
19631 >= 5*xabs
5*xabs = 19631
A
w5760
98163 >= 25*xabs
25*xabs = 98163
B
w5761
98168 >= 25*xabs
25*xabs = 98168
A
w5762
3927 >= xabs
xabs = 3927
B

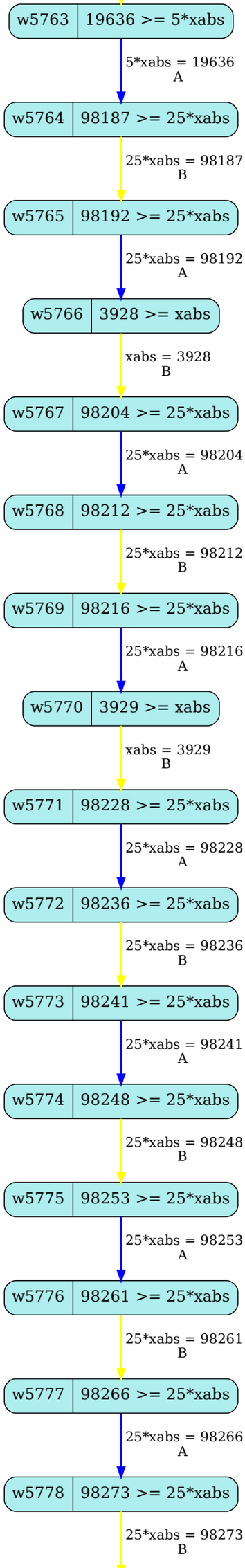
w5763
19636 >= 5*xabs
5*xabs = 19636
A
w5764
98187 >= 25*xabs
25*xabs = 98187
B
w5765
98192 >= 25*xabs
25*xabs = 98192
A
w5766
3928 >= xabs
xabs = 3928
B
w5767
98204 >= 25*xabs
25*xabs = 98204
A
w5768
98212 >= 25*xabs
25*xabs = 98212
B
w5769
98216 >= 25*xabs
25*xabs = 98216
A
w5770
3929 >= xabs
xabs = 3929
B
w5771
98228 >= 25*xabs
25*xabs = 98228
A
w5772
98236 >= 25*xabs
25*xabs = 98236
B
w5773
98241 >= 25*xabs
25*xabs = 98241
A
w5774
98248 >= 25*xabs
25*xabs = 98248
B
w5775
98253 >= 25*xabs
25*xabs = 98253
A
w5776
98261 >= 25*xabs
25*xabs = 98261
B
w5777
98266 >= 25*xabs
25*xabs = 98266
A
w5778
98273 >= 25*xabs
25*xabs = 98273
B

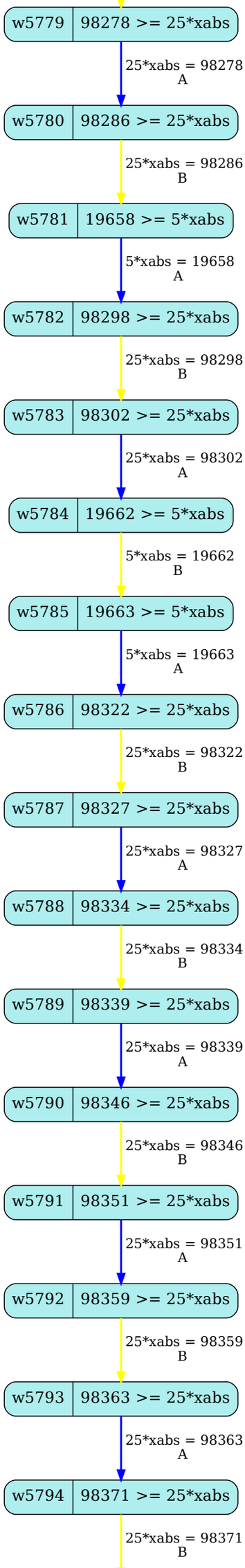
w5779
98278 >= 25*xabs
25*xabs = 98278
A
w5780
98286 >= 25*xabs
25*xabs = 98286
B
w5781
19658 >= 5*xabs
5*xabs = 19658
A
w5782
98298 >= 25*xabs
25*xabs = 98298
B
w5783
98302 >= 25*xabs
25*xabs = 98302
A
w5784
19662 >= 5*xabs
5*xabs = 19662
B
w5785
19663 >= 5*xabs
5*xabs = 19663
A
w5786
98322 >= 25*xabs
25*xabs = 98322
B
w5787
98327 >= 25*xabs
25*xabs = 98327
A
w5788
98334 >= 25*xabs
25*xabs = 98334
B
w5789
98339 >= 25*xabs
25*xabs = 98339
A
w5790
98346 >= 25*xabs
25*xabs = 98346
B
w5791
98351 >= 25*xabs
25*xabs = 98351
A
w5792
98359 >= 25*xabs
25*xabs = 98359
B
w5793
98363 >= 25*xabs
25*xabs = 98363
A
w5794
98371 >= 25*xabs
25*xabs = 98371
B

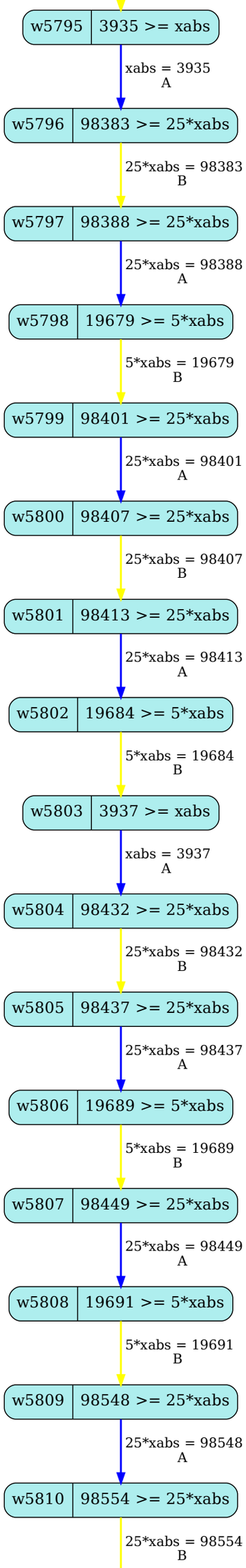
w5795
3935 >= xabs
xabs = 3935
A
w5796
98383 >= 25*xabs
25*xabs = 98383
B
w5797
98388 >= 25*xabs
25*xabs = 98388
A
w5798
19679 >= 5*xabs
5*xabs = 19679
B
w5799
98401 >= 25*xabs
25*xabs = 98401
A
w5800
98407 >= 25*xabs
25*xabs = 98407
B
w5801
98413 >= 25*xabs
25*xabs = 98413
A
w5802
19684 >= 5*xabs
5*xabs = 19684
B
w5803
3937 >= xabs
xabs = 3937
A
w5804
98432 >= 25*xabs
25*xabs = 98432
B
w5805
98437 >= 25*xabs
25*xabs = 98437
A
w5806
19689 >= 5*xabs
5*xabs = 19689
B
w5807
98449 >= 25*xabs
25*xabs = 98449
A
w5808
19691 >= 5*xabs
5*xabs = 19691
B
w5809
98548 >= 25*xabs
25*xabs = 98548
A
w5810
98554 >= 25*xabs
25*xabs = 98554
B

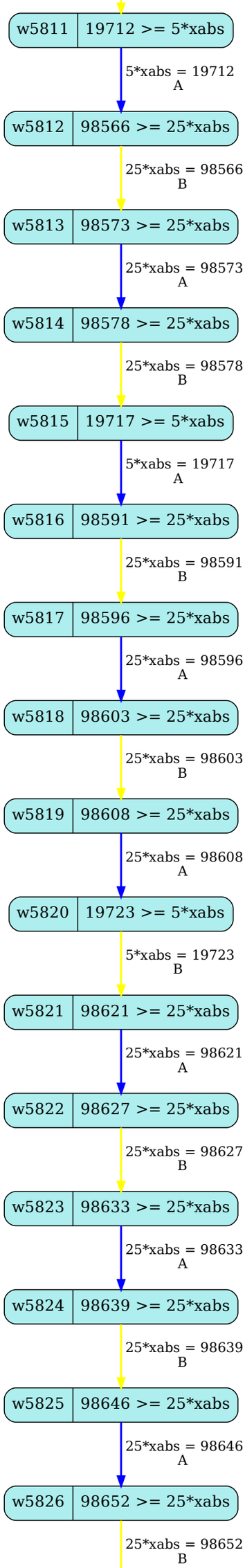
w5811
19712 >= 5*xabs
5*xabs = 19712
A
w5812
98566 >= 25*xabs
25*xabs = 98566
B
w5813
98573 >= 25*xabs
25*xabs = 98573
A
w5814
98578 >= 25*xabs
25*xabs = 98578
B
w5815
19717 >= 5*xabs
5*xabs = 19717
A
w5816
98591 >= 25*xabs
25*xabs = 98591
B
w5817
98596 >= 25*xabs
25*xabs = 98596
A
w5818
98603 >= 25*xabs
25*xabs = 98603
B
w5819
98608 >= 25*xabs
25*xabs = 98608
A
w5820
19723 >= 5*xabs
5*xabs = 19723
B
w5821
98621 >= 25*xabs
25*xabs = 98621
A
w5822
98627 >= 25*xabs
25*xabs = 98627
B
w5823
98633 >= 25*xabs
25*xabs = 98633
A
w5824
98639 >= 25*xabs
25*xabs = 98639
B
w5825
98646 >= 25*xabs
25*xabs = 98646
A
w5826
98652 >= 25*xabs
25*xabs = 98652
B

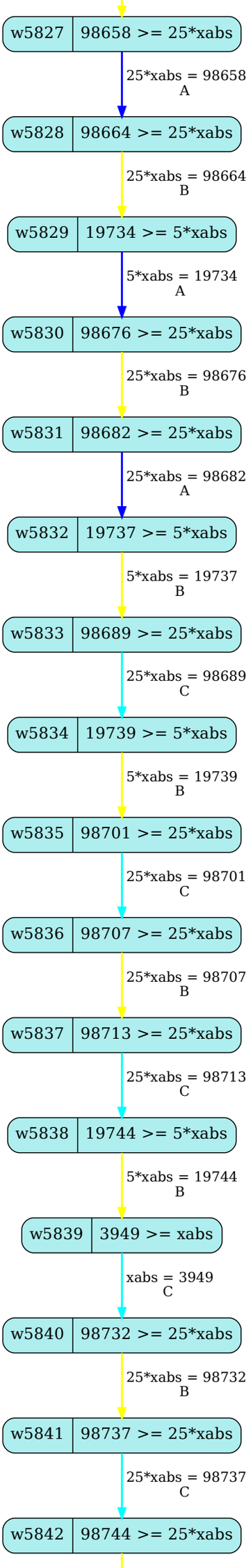
w5827
98658 >= 25*xabs
25*xabs = 98658
A
w5828
98664 >= 25*xabs
25*xabs = 98664
B
w5829
19734 >= 5*xabs
5*xabs = 19734
A
w5830
98676 >= 25*xabs
25*xabs = 98676
B
w5831
98682 >= 25*xabs
25*xabs = 98682
A
w5832
19737 >= 5*xabs
5*xabs = 19737
B
w5833
98689 >= 25*xabs
25*xabs = 98689
C
w5834
19739 >= 5*xabs
5*xabs = 19739
B
w5835
98701 >= 25*xabs
25*xabs = 98701
C
w5836
98707 >= 25*xabs
25*xabs = 98707
B
w5837
98713 >= 25*xabs
25*xabs = 98713
C
w5838
19744 >= 5*xabs
5*xabs = 19744
B
w5839
3949 >= xabs
xabs = 3949
C
w5840
98732 >= 25*xabs
25*xabs = 98732
B
w5841
98737 >= 25*xabs
25*xabs = 98737
C
w5842
98744 >= 25*xabs

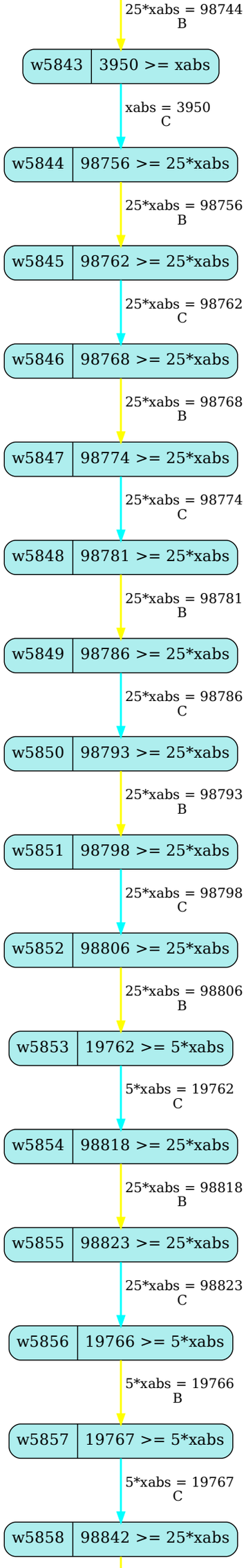
25*xabs = 98744
B
w5843
3950 >= xabs
xabs = 3950
C
w5844
98756 >= 25*xabs
25*xabs = 98756
B
w5845
98762 >= 25*xabs
25*xabs = 98762
C
w5846
98768 >= 25*xabs
25*xabs = 98768
B
w5847
98774 >= 25*xabs
25*xabs = 98774
C
w5848
98781 >= 25*xabs
25*xabs = 98781
B
w5849
98786 >= 25*xabs
25*xabs = 98786
C
w5850
98793 >= 25*xabs
25*xabs = 98793
B
w5851
98798 >= 25*xabs
25*xabs = 98798
C
w5852
98806 >= 25*xabs
25*xabs = 98806
B
w5853
19762 >= 5*xabs
5*xabs = 19762
C
w5854
98818 >= 25*xabs
25*xabs = 98818
B
w5855
98823 >= 25*xabs
25*xabs = 98823
C
w5856
19766 >= 5*xabs
5*xabs = 19766
B
w5857
19767 >= 5*xabs
5*xabs = 19767
C
w5858
98842 >= 25*xabs

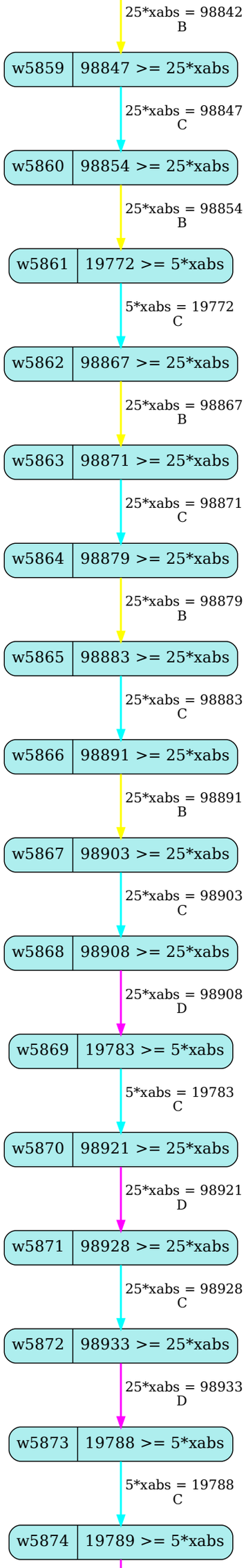
25*xabs = 98842
B
w5859
98847 >= 25*xabs
25*xabs = 98847
C
w5860
98854 >= 25*xabs
25*xabs = 98854
B
w5861
19772 >= 5*xabs
5*xabs = 19772
C
w5862
98867 >= 25*xabs
25*xabs = 98867
B
w5863
98871 >= 25*xabs
25*xabs = 98871
C
w5864
98879 >= 25*xabs
25*xabs = 98879
B
w5865
98883 >= 25*xabs
25*xabs = 98883
C
w5866
98891 >= 25*xabs
25*xabs = 98891
B
w5867
98903 >= 25*xabs
25*xabs = 98903
C
w5868
98908 >= 25*xabs
25*xabs = 98908
D
w5869
19783 >= 5*xabs
5*xabs = 19783
C
w5870
98921 >= 25*xabs
25*xabs = 98921
D
w5871
98928 >= 25*xabs
25*xabs = 98928
C
w5872
98933 >= 25*xabs
25*xabs = 98933
D
w5873
19788 >= 5*xabs
5*xabs = 19788
C
w5874
19789 >= 5*xabs

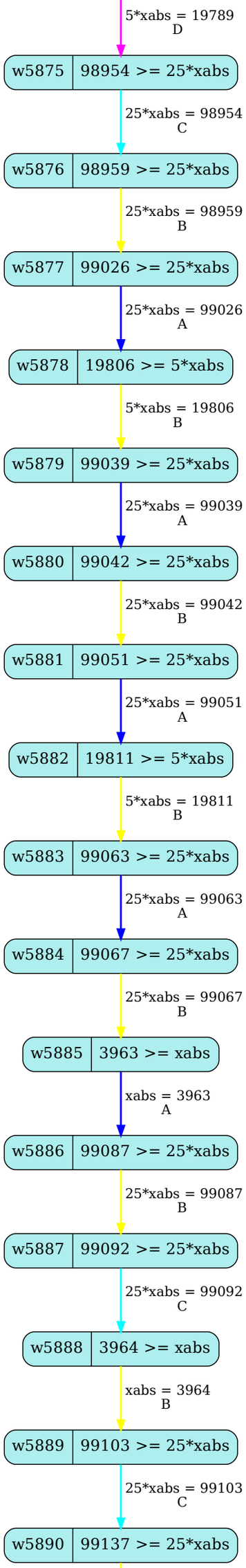
5*xabs = 19789
D
w5875
98954 >= 25*xabs
25*xabs = 98954
C
w5876
98959 >= 25*xabs
25*xabs = 98959
B
w5877
99026 >= 25*xabs
25*xabs = 99026
A
w5878
19806 >= 5*xabs
5*xabs = 19806
B
w5879
99039 >= 25*xabs
25*xabs = 99039
A
w5880
99042 >= 25*xabs
25*xabs = 99042
B
w5881
99051 >= 25*xabs
25*xabs = 99051
A
w5882
19811 >= 5*xabs
5*xabs = 19811
B
w5883
99063 >= 25*xabs
25*xabs = 99063
A
w5884
99067 >= 25*xabs
25*xabs = 99067
B
w5885
3963 >= xabs
xabs = 3963
A
w5886
99087 >= 25*xabs
25*xabs = 99087
B
w5887
99092 >= 25*xabs
25*xabs = 99092
C
w5888
3964 >= xabs
xabs = 3964
B
w5889
99103 >= 25*xabs
25*xabs = 99103
C
w5890
99137 >= 25*xabs

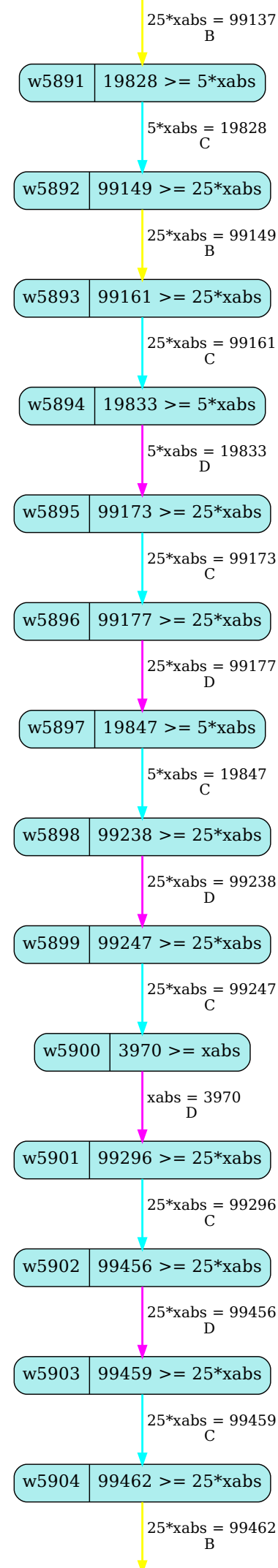
25*xabs = 99137
B
w5891
19828 >= 5*xabs
5*xabs = 19828
C
w5892
99149 >= 25*xabs
25*xabs = 99149
B
w5893
99161 >= 25*xabs
25*xabs = 99161
C
w5894
19833 >= 5*xabs
5*xabs = 19833
D
w5895
99173 >= 25*xabs
25*xabs = 99173
C
w5896
99177 >= 25*xabs
25*xabs = 99177
D
w5897
19847 >= 5*xabs
5*xabs = 19847
C
w5898
99238 >= 25*xabs
25*xabs = 99238
D
w5899
99247 >= 25*xabs
25*xabs = 99247
C
w5900
3970 >= xabs
xabs = 3970
D
w5901
99296 >= 25*xabs
25*xabs = 99296
C
w5902
99456 >= 25*xabs
25*xabs = 99456
D
w5903
99459 >= 25*xabs
25*xabs = 99459
C
w5904
99462 >= 25*xabs
25*xabs = 99462
B

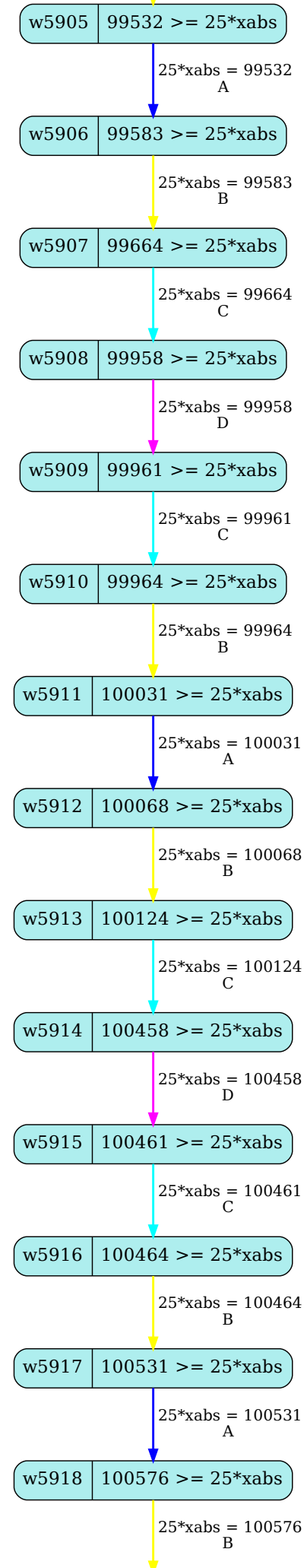
w5905
99532 >= 25*xabs
25*xabs = 99532
A
w5906
99583 >= 25*xabs
25*xabs = 99583
B
w5907
99664 >= 25*xabs
25*xabs = 99664
C
w5908
99958 >= 25*xabs
25*xabs = 99958
D
w5909
99961 >= 25*xabs
25*xabs = 99961
C
w5910
99964 >= 25*xabs
25*xabs = 99964
B
w5911
100031 >= 25*xabs
25*xabs = 100031
A
w5912
100068 >= 25*xabs
25*xabs = 100068
B
w5913
100124 >= 25*xabs
25*xabs = 100124
C
w5914
100458 >= 25*xabs
25*xabs = 100458
D
w5915
100461 >= 25*xabs
25*xabs = 100461
C
w5916
100464 >= 25*xabs
25*xabs = 100464
B
w5917
100531 >= 25*xabs
25*xabs = 100531
A
w5918
100576 >= 25*xabs
25*xabs = 100576
B

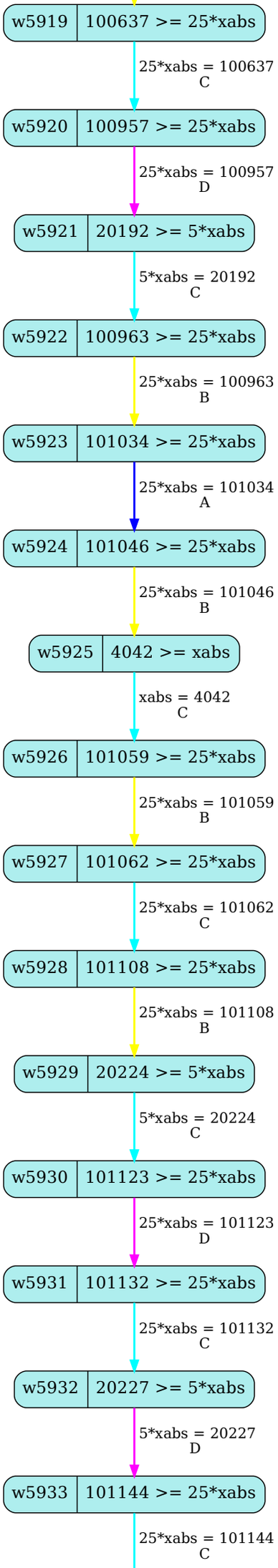
w5919
100637 >= 25*xabs
25*xabs = 100637
C
w5920
100957 >= 25*xabs
25*xabs = 100957
D
w5921
20192 >= 5*xabs
5*xabs = 20192
C
w5922
100963 >= 25*xabs
25*xabs = 100963
B
w5923
101034 >= 25*xabs
25*xabs = 101034
A
w5924
101046 >= 25*xabs
25*xabs = 101046
B
w5925
4042 >= xabs
xabs = 4042
C
w5926
101059 >= 25*xabs
25*xabs = 101059
B
w5927
101062 >= 25*xabs
25*xabs = 101062
C
w5928
101108 >= 25*xabs
25*xabs = 101108
B
w5929
20224 >= 5*xabs
5*xabs = 20224
C
w5930
101123 >= 25*xabs
25*xabs = 101123
D
w5931
101132 >= 25*xabs
25*xabs = 101132
C
w5932
20227 >= 5*xabs
5*xabs = 20227
D
w5933
101144 >= 25*xabs
25*xabs = 101144
C

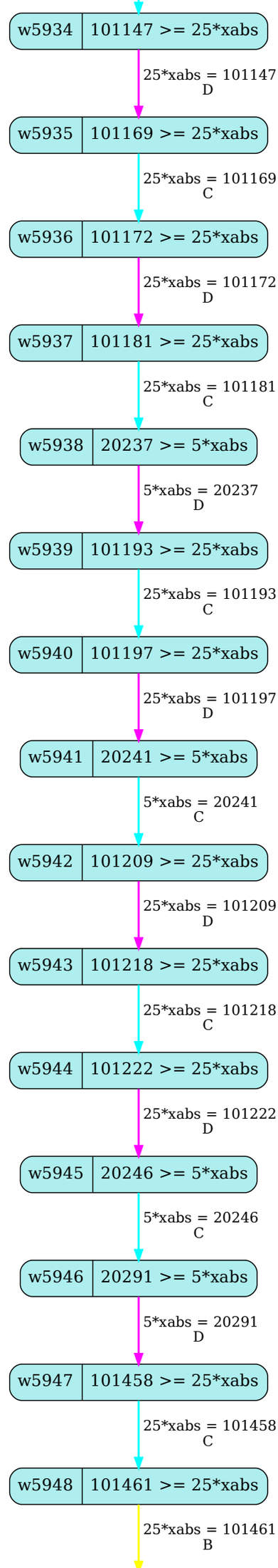
w5934
101147 >= 25*xabs
25*xabs = 101147
D
w5935
101169 >= 25*xabs
25*xabs = 101169
C
w5936
101172 >= 25*xabs
25*xabs = 101172
D
w5937
101181 >= 25*xabs
25*xabs = 101181
C
w5938
20237 >= 5*xabs
5*xabs = 20237
D
w5939
101193 >= 25*xabs
25*xabs = 101193
C
w5940
101197 >= 25*xabs
25*xabs = 101197
D
w5941
20241 >= 5*xabs
5*xabs = 20241
C
w5942
101209 >= 25*xabs
25*xabs = 101209
D
w5943
101218 >= 25*xabs
25*xabs = 101218
C
w5944
101222 >= 25*xabs
25*xabs = 101222
D
w5945
20246 >= 5*xabs
5*xabs = 20246
C
w5946
20291 >= 5*xabs
5*xabs = 20291
D
w5947
101458 >= 25*xabs
25*xabs = 101458
C
w5948
101461 >= 25*xabs
25*xabs = 101461
B

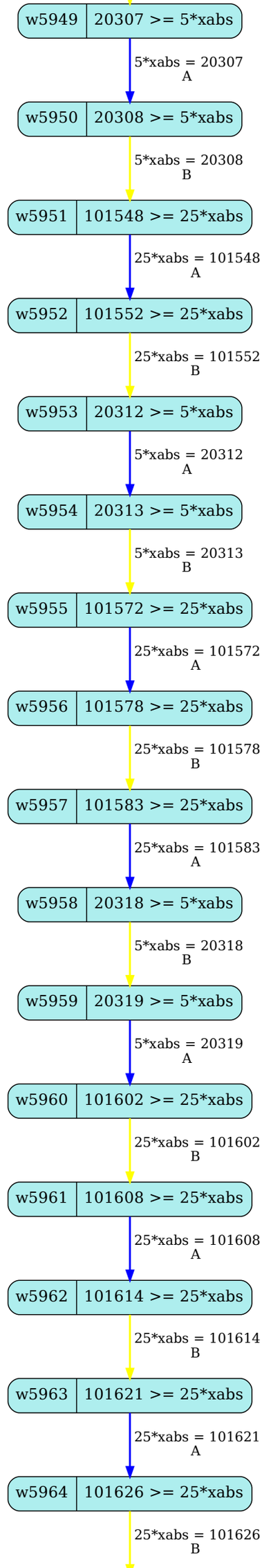
w5949
20307 >= 5*xabs
5*xabs = 20307
A
w5950
20308 >= 5*xabs
5*xabs = 20308
B
w5951
101548 >= 25*xabs
25*xabs = 101548
A
w5952
101552 >= 25*xabs
25*xabs = 101552
B
w5953
20312 >= 5*xabs
5*xabs = 20312
A
w5954
20313 >= 5*xabs
5*xabs = 20313
B
w5955
101572 >= 25*xabs
25*xabs = 101572
A
w5956
101578 >= 25*xabs
25*xabs = 101578
B
w5957
101583 >= 25*xabs
25*xabs = 101583
A
w5958
20318 >= 5*xabs
5*xabs = 20318
B
w5959
20319 >= 5*xabs
5*xabs = 20319
A
w5960
101602 >= 25*xabs
25*xabs = 101602
B
w5961
101608 >= 25*xabs
25*xabs = 101608
A
w5962
101614 >= 25*xabs
25*xabs = 101614
B
w5963
101621 >= 25*xabs
25*xabs = 101621
A
w5964
101626 >= 25*xabs
25*xabs = 101626
B

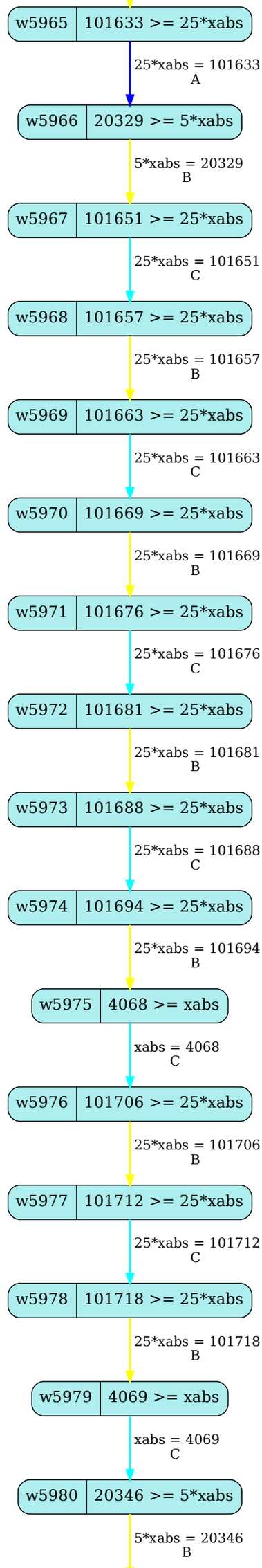
w5965
101633 >= 25*xabs
25*xabs = 101633
A
w5966
20329 >= 5*xabs
5*xabs = 20329
B
w5967
101651 >= 25*xabs
25*xabs = 101651
C
w5968
101657 >= 25*xabs
25*xabs = 101657
B
w5969
101663 >= 25*xabs
25*xabs = 101663
C
w5970
101669 >= 25*xabs
25*xabs = 101669
B
w5971
101676 >= 25*xabs
25*xabs = 101676
C
w5972
101681 >= 25*xabs
25*xabs = 101681
B
w5973
101688 >= 25*xabs
25*xabs = 101688
C
w5974
101694 >= 25*xabs
25*xabs = 101694
B
w5975
4068 >= xabs
xabs = 4068
C
w5976
101706 >= 25*xabs
25*xabs = 101706
B
w5977
101712 >= 25*xabs
25*xabs = 101712
C
w5978
101718 >= 25*xabs
25*xabs = 101718
B
w5979
4069 >= xabs
xabs = 4069
C
w5980
20346 >= 5*xabs
5*xabs = 20346
B

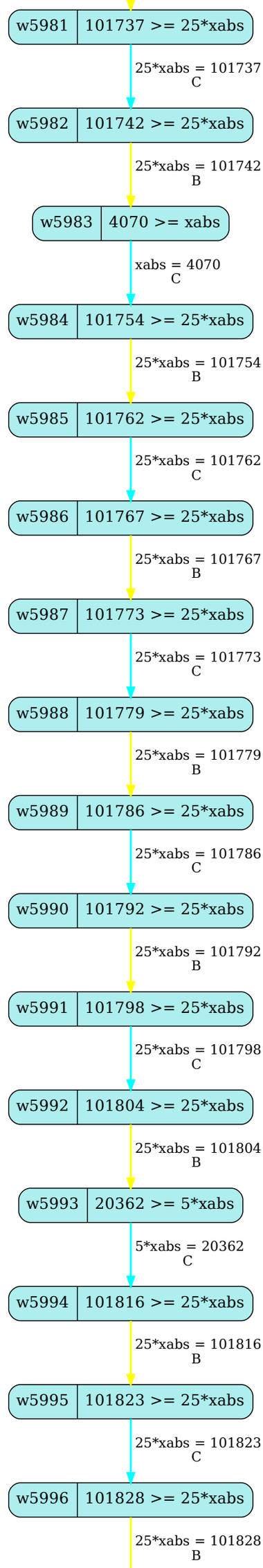
w5981
101737 >= 25*xabs
25*xabs = 101737
C
w5982
101742 >= 25*xabs
25*xabs = 101742
B
w5983
4070 >= xabs
xabs = 4070
C
w5984
101754 >= 25*xabs
25*xabs = 101754
B
w5985
101762 >= 25*xabs
25*xabs = 101762
C
w5986
101767 >= 25*xabs
25*xabs = 101767
B
w5987
101773 >= 25*xabs
25*xabs = 101773
C
w5988
101779 >= 25*xabs
25*xabs = 101779
B
w5989
101786 >= 25*xabs
25*xabs = 101786
C
w5990
101792 >= 25*xabs
25*xabs = 101792
B
w5991
101798 >= 25*xabs
25*xabs = 101798
C
w5992
101804 >= 25*xabs
25*xabs = 101804
B
w5993
20362 >= 5*xabs
5*xabs = 20362
C
w5994
101816 >= 25*xabs
25*xabs = 101816
B
w5995
101823 >= 25*xabs
25*xabs = 101823
C
w5996
101828 >= 25*xabs
25*xabs = 101828
B

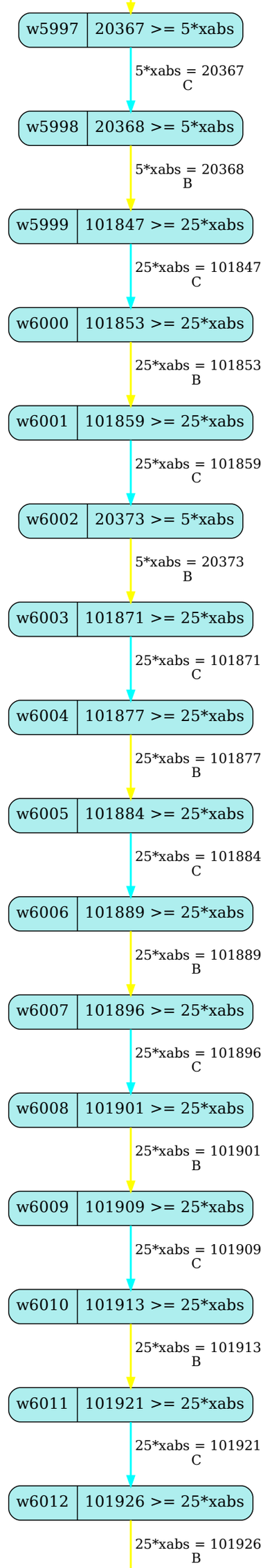
w5997
20367 >= 5*xabs
5*xabs = 20367
C
w5998
20368 >= 5*xabs
5*xabs = 20368
B
w5999
101847 >= 25*xabs
25*xabs = 101847
C
w6000
101853 >= 25*xabs
25*xabs = 101853
B
w6001
101859 >= 25*xabs
25*xabs = 101859
C
w6002
20373 >= 5*xabs
5*xabs = 20373
B
w6003
101871 >= 25*xabs
25*xabs = 101871
C
w6004
101877 >= 25*xabs
25*xabs = 101877
B
w6005
101884 >= 25*xabs
25*xabs = 101884
C
w6006
101889 >= 25*xabs
25*xabs = 101889
B
w6007
101896 >= 25*xabs
25*xabs = 101896
C
w6008
101901 >= 25*xabs
25*xabs = 101901
B
w6009
101909 >= 25*xabs
25*xabs = 101909
C
w6010
101913 >= 25*xabs
25*xabs = 101913
B
w6011
101921 >= 25*xabs
25*xabs = 101921
C
w6012
101926 >= 25*xabs
25*xabs = 101926
B

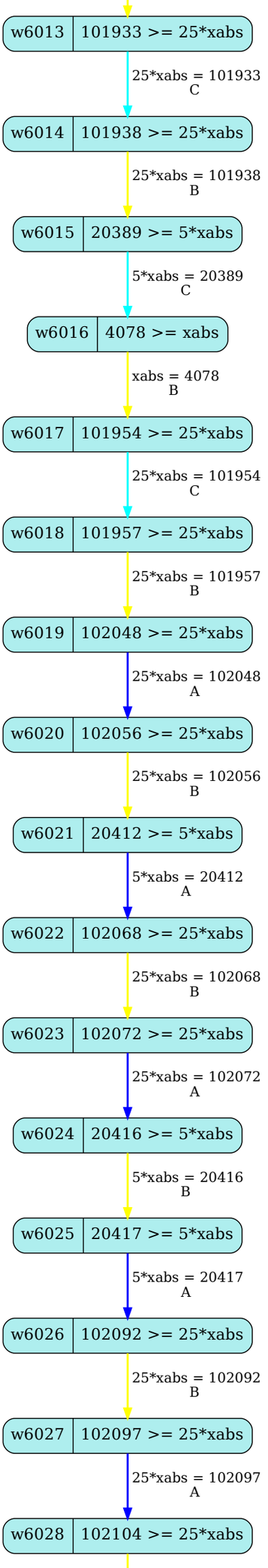
w6013
101933 >= 25*xabs
25*xabs = 101933
C
w6014
101938 >= 25*xabs
25*xabs = 101938
B
w6015
20389 >= 5*xabs
5*xabs = 20389
C
w6016
4078 >= xabs
xabs = 4078
B
w6017
101954 >= 25*xabs
25*xabs = 101954
C
w6018
101957 >= 25*xabs
25*xabs = 101957
B
w6019
102048 >= 25*xabs
25*xabs = 102048
A
w6020
102056 >= 25*xabs
25*xabs = 102056
B
w6021
20412 >= 5*xabs
5*xabs = 20412
A
w6022
102068 >= 25*xabs
25*xabs = 102068
B
w6023
102072 >= 25*xabs
25*xabs = 102072
A
w6024
20416 >= 5*xabs
5*xabs = 20416
B
w6025
20417 >= 5*xabs
5*xabs = 20417
A
w6026
102092 >= 25*xabs
25*xabs = 102092
B
w6027
102097 >= 25*xabs
25*xabs = 102097
A
w6028
102104 >= 25*xabs

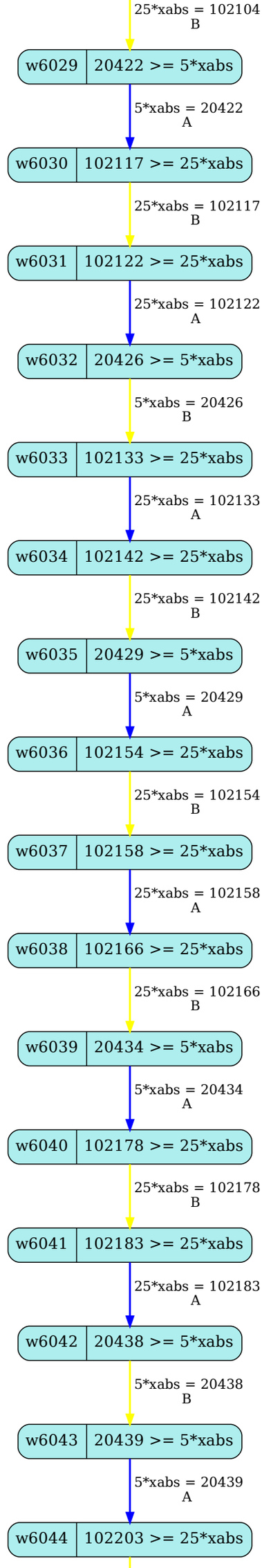
25*xabs = 102104
B
w6029
20422 >= 5*xabs
5*xabs = 20422
A
w6030
102117 >= 25*xabs
25*xabs = 102117
B
w6031
102122 >= 25*xabs
25*xabs = 102122
A
w6032
20426 >= 5*xabs
5*xabs = 20426
B
w6033
102133 >= 25*xabs
25*xabs = 102133
A
w6034
102142 >= 25*xabs
25*xabs = 102142
B
w6035
20429 >= 5*xabs
5*xabs = 20429
A
w6036
102154 >= 25*xabs
25*xabs = 102154
B
w6037
102158 >= 25*xabs
25*xabs = 102158
A
w6038
102166 >= 25*xabs
25*xabs = 102166
B
w6039
20434 >= 5*xabs
5*xabs = 20434
A
w6040
102178 >= 25*xabs
25*xabs = 102178
B
w6041
102183 >= 25*xabs
25*xabs = 102183
A
w6042
20438 >= 5*xabs
5*xabs = 20438
B
w6043
20439 >= 5*xabs
5*xabs = 20439
A
w6044
102203 >= 25*xabs

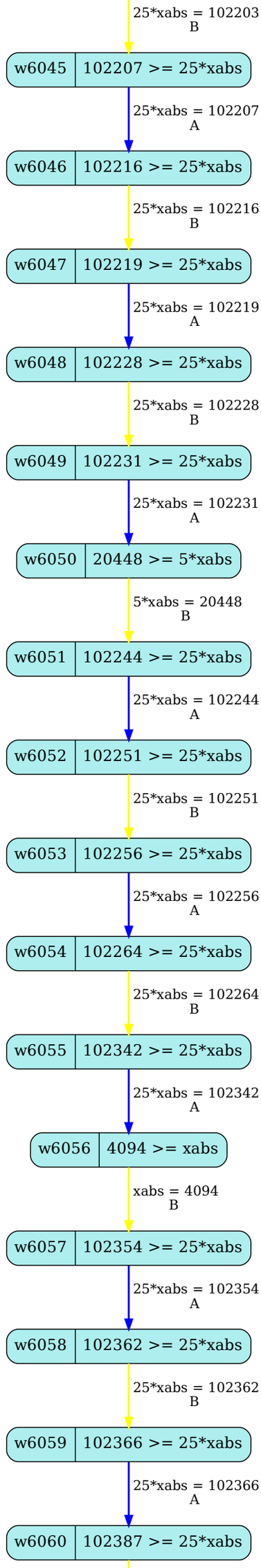
25*xabs = 102203
B
w6045
102207 >= 25*xabs
25*xabs = 102207
A
w6046
102216 >= 25*xabs
25*xabs = 102216
B
w6047
102219 >= 25*xabs
25*xabs = 102219
A
w6048
102228 >= 25*xabs
25*xabs = 102228
B
w6049
102231 >= 25*xabs
25*xabs = 102231
A
w6050
20448 >= 5*xabs
5*xabs = 20448
B
w6051
102244 >= 25*xabs
25*xabs = 102244
A
w6052
102251 >= 25*xabs
25*xabs = 102251
B
w6053
102256 >= 25*xabs
25*xabs = 102256
A
w6054
102264 >= 25*xabs
25*xabs = 102264
B
w6055
102342 >= 25*xabs
25*xabs = 102342
A
w6056
4094 >= xabs
xabs = 4094
B
w6057
102354 >= 25*xabs
25*xabs = 102354
A
w6058
102362 >= 25*xabs
25*xabs = 102362
B
w6059
102366 >= 25*xabs
25*xabs = 102366
A
w6060
102387 >= 25*xabs

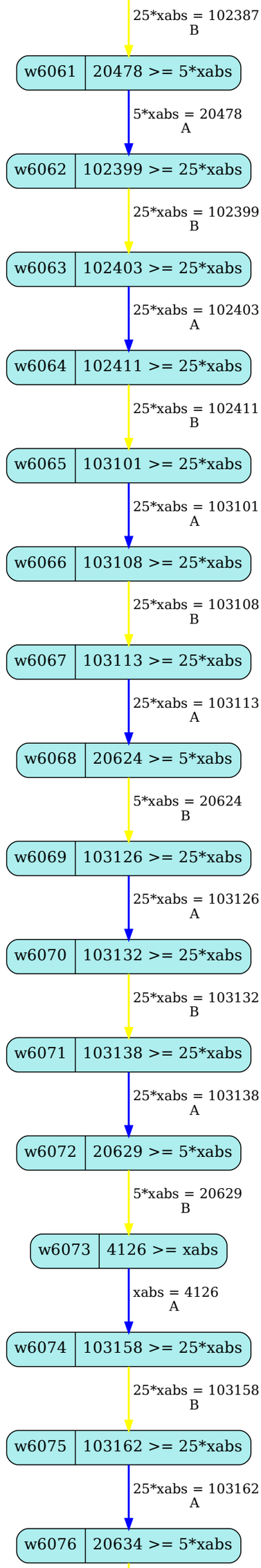
25*xabs = 102387
B
w6061
20478 >= 5*xabs
5*xabs = 20478
A
w6062
102399 >= 25*xabs
25*xabs = 102399
B
w6063
102403 >= 25*xabs
25*xabs = 102403
A
w6064
102411 >= 25*xabs
25*xabs = 102411
B
w6065
103101 >= 25*xabs
25*xabs = 103101
A
w6066
103108 >= 25*xabs
25*xabs = 103108
B
w6067
103113 >= 25*xabs
25*xabs = 103113
A
w6068
20624 >= 5*xabs
5*xabs = 20624
B
w6069
103126 >= 25*xabs
25*xabs = 103126
A
w6070
103132 >= 25*xabs
25*xabs = 103132
B
w6071
103138 >= 25*xabs
25*xabs = 103138
A
w6072
20629 >= 5*xabs
5*xabs = 20629
B
w6073
4126 >= xabs
xabs = 4126
A
w6074
103158 >= 25*xabs
25*xabs = 103158
B
w6075
103162 >= 25*xabs
25*xabs = 103162
A
w6076
20634 >= 5*xabs

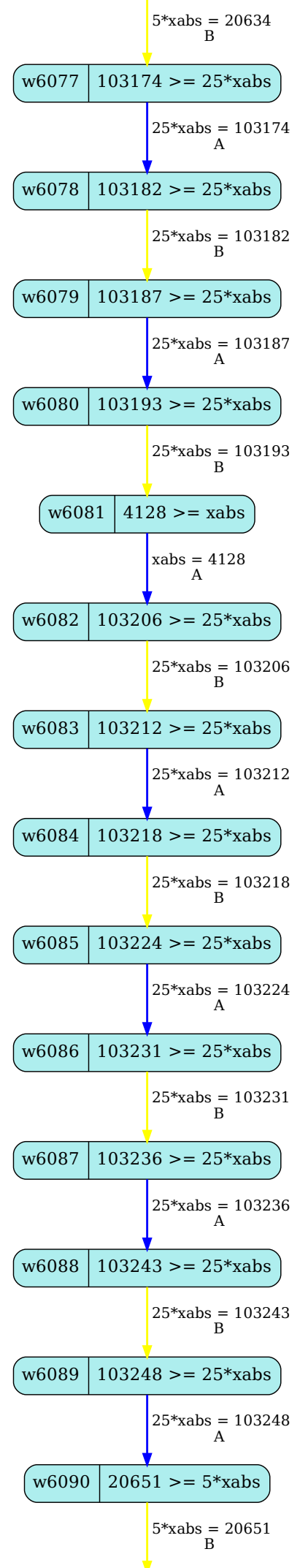
5*xabs = 20634
B
w6077
103174 >= 25*xabs
25*xabs = 103174
A
w6078
103182 >= 25*xabs
25*xabs = 103182
B
w6079
103187 >= 25*xabs
25*xabs = 103187
A
w6080
103193 >= 25*xabs
25*xabs = 103193
B
w6081
4128 >= xabs
xabs = 4128
A
w6082
103206 >= 25*xabs
25*xabs = 103206
B
w6083
103212 >= 25*xabs
25*xabs = 103212
A
w6084
103218 >= 25*xabs
25*xabs = 103218
B
w6085
103224 >= 25*xabs
25*xabs = 103224
A
w6086
103231 >= 25*xabs
25*xabs = 103231
B
w6087
103236 >= 25*xabs
25*xabs = 103236
A
w6088
103243 >= 25*xabs
25*xabs = 103243
B
w6089
103248 >= 25*xabs
25*xabs = 103248
A
w6090
20651 >= 5*xabs
5*xabs = 20651
B

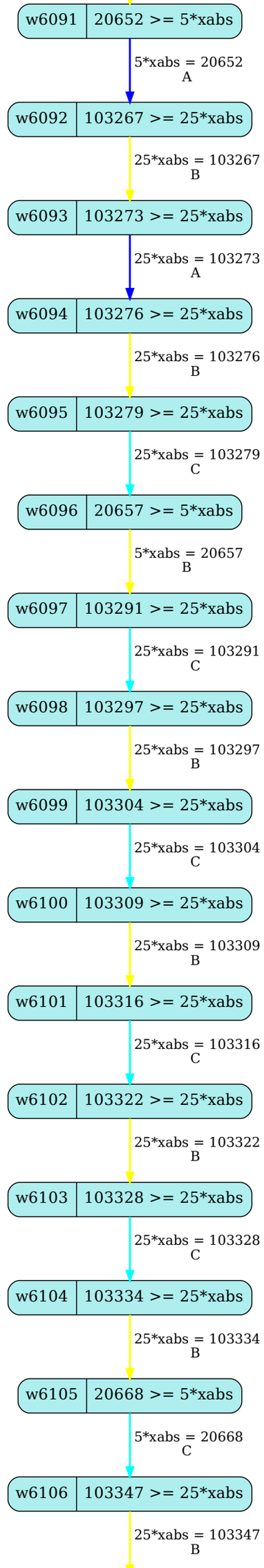
w6091
20652 >= 5*xabs
5*xabs = 20652
A
w6092
103267 >= 25*xabs
25*xabs = 103267
B
w6093
103273 >= 25*xabs
25*xabs = 103273
A
w6094
103276 >= 25*xabs
25*xabs = 103276
B
w6095
103279 >= 25*xabs
25*xabs = 103279
C
w6096
20657 >= 5*xabs
5*xabs = 20657
B
w6097
103291 >= 25*xabs
25*xabs = 103291
C
w6098
103297 >= 25*xabs
25*xabs = 103297
B
w6099
103304 >= 25*xabs
25*xabs = 103304
C
w6100
103309 >= 25*xabs
25*xabs = 103309
B
w6101
103316 >= 25*xabs
25*xabs = 103316
C
w6102
103322 >= 25*xabs
25*xabs = 103322
B
w6103
103328 >= 25*xabs
25*xabs = 103328
C
w6104
103334 >= 25*xabs
25*xabs = 103334
B
w6105
20668 >= 5*xabs
5*xabs = 20668
C
w6106
103347 >= 25*xabs
25*xabs = 103347
B

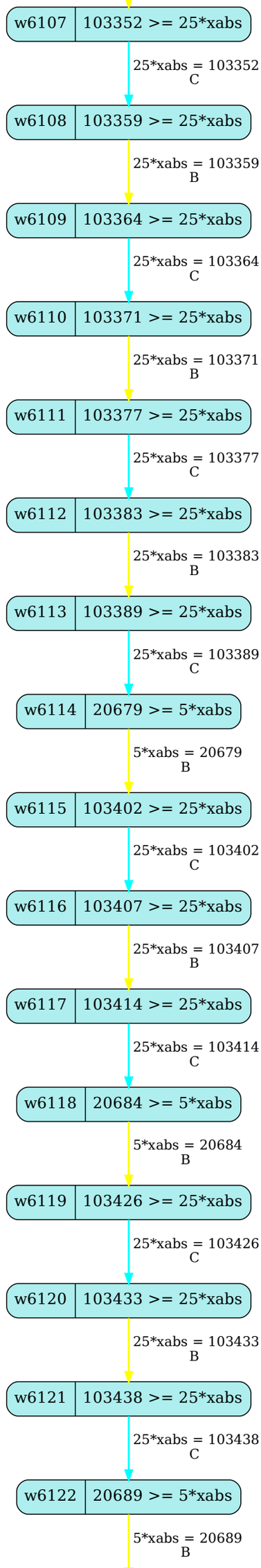
w6107
103352 >= 25*xabs
25*xabs = 103352
C
w6108
103359 >= 25*xabs
25*xabs = 103359
B
w6109
103364 >= 25*xabs
25*xabs = 103364
C
w6110
103371 >= 25*xabs
25*xabs = 103371
B
w6111
103377 >= 25*xabs
25*xabs = 103377
C
w6112
103383 >= 25*xabs
25*xabs = 103383
B
w6113
103389 >= 25*xabs
25*xabs = 103389
C
w6114
20679 >= 5*xabs
5*xabs = 20679
B
w6115
103402 >= 25*xabs
25*xabs = 103402
C
w6116
103407 >= 25*xabs
25*xabs = 103407
B
w6117
103414 >= 25*xabs
25*xabs = 103414
C
w6118
20684 >= 5*xabs
5*xabs = 20684
B
w6119
103426 >= 25*xabs
25*xabs = 103426
C
w6120
103433 >= 25*xabs
25*xabs = 103433
B
w6121
103438 >= 25*xabs
25*xabs = 103438
C
w6122
20689 >= 5*xabs
5*xabs = 20689
B

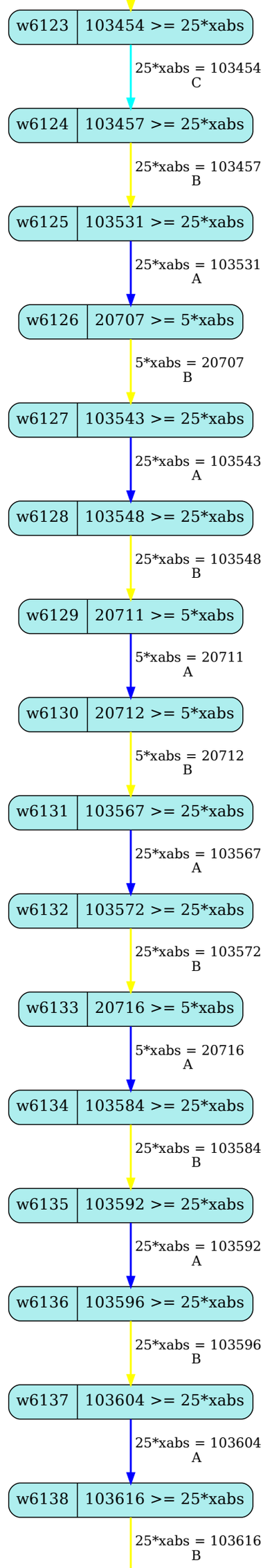
w6123
103454 >= 25*xabs
25*xabs = 103454
C
w6124
103457 >= 25*xabs
25*xabs = 103457
B
w6125
103531 >= 25*xabs
25*xabs = 103531
A
w6126
20707 >= 5*xabs
5*xabs = 20707
B
w6127
103543 >= 25*xabs
25*xabs = 103543
A
w6128
103548 >= 25*xabs
25*xabs = 103548
B
w6129
20711 >= 5*xabs
5*xabs = 20711
A
w6130
20712 >= 5*xabs
5*xabs = 20712
B
w6131
103567 >= 25*xabs
25*xabs = 103567
A
w6132
103572 >= 25*xabs
25*xabs = 103572
B
w6133
20716 >= 5*xabs
5*xabs = 20716
A
w6134
103584 >= 25*xabs
25*xabs = 103584
B
w6135
103592 >= 25*xabs
25*xabs = 103592
A
w6136
103596 >= 25*xabs
25*xabs = 103596
B
w6137
103604 >= 25*xabs
25*xabs = 103604
A
w6138
103616 >= 25*xabs
25*xabs = 103616
B

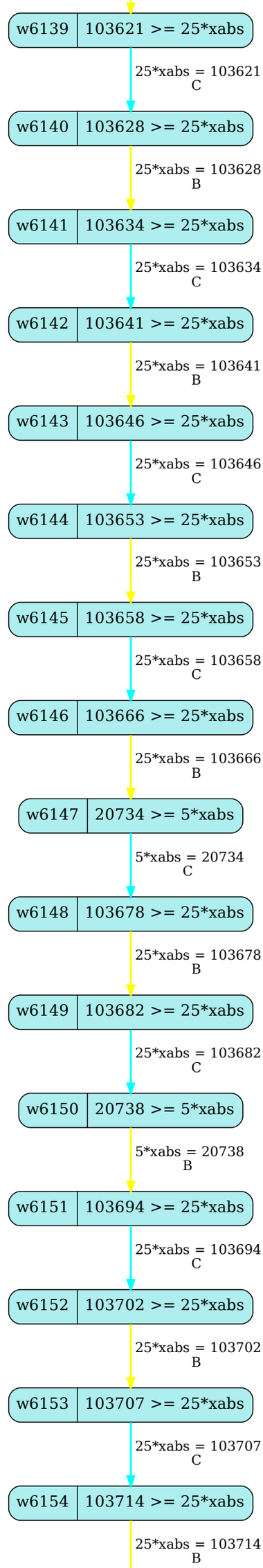
w6139
103621 >= 25*xabs
25*xabs = 103621
C
w6140
103628 >= 25*xabs
25*xabs = 103628
B
w6141
103634 >= 25*xabs
25*xabs = 103634
C
w6142
103641 >= 25*xabs
25*xabs = 103641
B
w6143
103646 >= 25*xabs
25*xabs = 103646
C
w6144
103653 >= 25*xabs
25*xabs = 103653
B
w6145
103658 >= 25*xabs
25*xabs = 103658
C
w6146
103666 >= 25*xabs
25*xabs = 103666
B
w6147
20734 >= 5*xabs
5*xabs = 20734
C
w6148
103678 >= 25*xabs
25*xabs = 103678
B
w6149
103682 >= 25*xabs
25*xabs = 103682
C
w6150
20738 >= 5*xabs
5*xabs = 20738
B
w6151
103694 >= 25*xabs
25*xabs = 103694
C
w6152
103702 >= 25*xabs
25*xabs = 103702
B
w6153
103707 >= 25*xabs
25*xabs = 103707
C
w6154
103714 >= 25*xabs
25*xabs = 103714
B

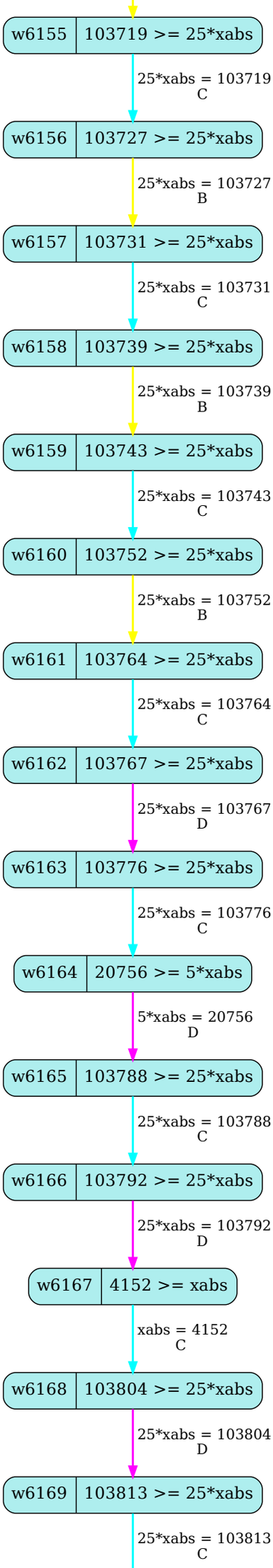
w6155
103719 >= 25*xabs
25*xabs = 103719
C
w6156
103727 >= 25*xabs
25*xabs = 103727
B
w6157
103731 >= 25*xabs
25*xabs = 103731
C
w6158
103739 >= 25*xabs
25*xabs = 103739
B
w6159
103743 >= 25*xabs
25*xabs = 103743
C
w6160
103752 >= 25*xabs
25*xabs = 103752
B
w6161
103764 >= 25*xabs
25*xabs = 103764
C
w6162
103767 >= 25*xabs
25*xabs = 103767
D
w6163
103776 >= 25*xabs
25*xabs = 103776
C
w6164
20756 >= 5*xabs
5*xabs = 20756
D
w6165
103788 >= 25*xabs
25*xabs = 103788
C
w6166
103792 >= 25*xabs
25*xabs = 103792
D
w6167
4152 >= xabs
xabs = 4152
C
w6168
103804 >= 25*xabs
25*xabs = 103804
D
w6169
103813 >= 25*xabs
25*xabs = 103813
C

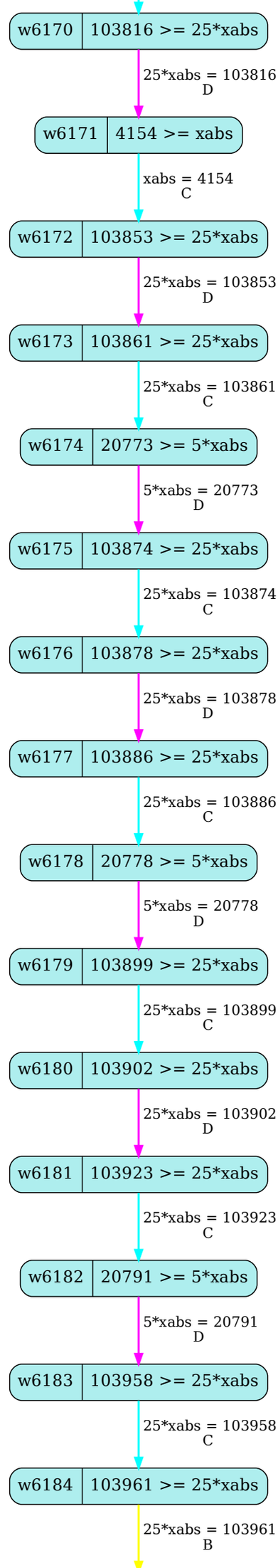
w6170
103816 >= 25*xabs
25*xabs = 103816
D
w6171
4154 >= xabs
xabs = 4154
C
w6172
103853 >= 25*xabs
25*xabs = 103853
D
w6173
103861 >= 25*xabs
25*xabs = 103861
C
w6174
20773 >= 5*xabs
5*xabs = 20773
D
w6175
103874 >= 25*xabs
25*xabs = 103874
C
w6176
103878 >= 25*xabs
25*xabs = 103878
D
w6177
103886 >= 25*xabs
25*xabs = 103886
C
w6178
20778 >= 5*xabs
5*xabs = 20778
D
w6179
103899 >= 25*xabs
25*xabs = 103899
C
w6180
103902 >= 25*xabs
25*xabs = 103902
D
w6181
103923 >= 25*xabs
25*xabs = 103923
C
w6182
20791 >= 5*xabs
5*xabs = 20791
D
w6183
103958 >= 25*xabs
25*xabs = 103958
C
w6184
103961 >= 25*xabs
25*xabs = 103961
B

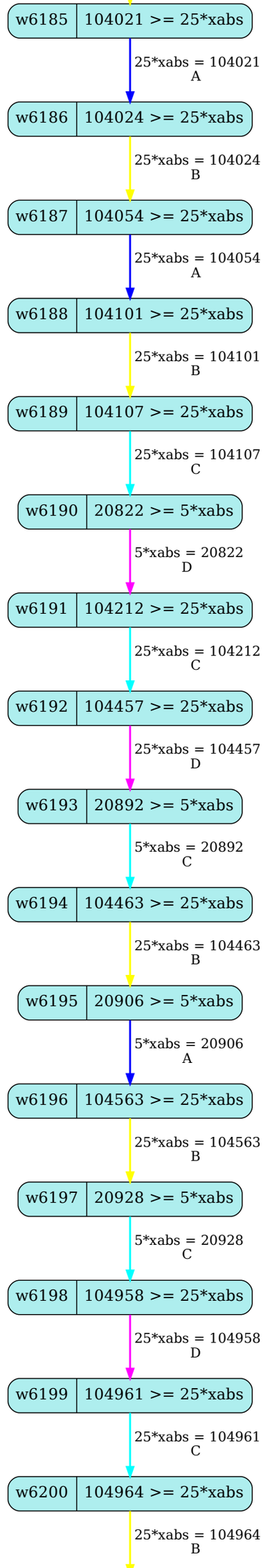
w6185
104021 >= 25*xabs
25*xabs = 104021
A
w6186
104024 >= 25*xabs
25*xabs = 104024
B
w6187
104054 >= 25*xabs
25*xabs = 104054
A
w6188
104101 >= 25*xabs
25*xabs = 104101
B
w6189
104107 >= 25*xabs
25*xabs = 104107
C
w6190
20822 >= 5*xabs
5*xabs = 20822
D
w6191
104212 >= 25*xabs
25*xabs = 104212
C
w6192
104457 >= 25*xabs
25*xabs = 104457
D
w6193
20892 >= 5*xabs
5*xabs = 20892
C
w6194
104463 >= 25*xabs
25*xabs = 104463
B
w6195
20906 >= 5*xabs
5*xabs = 20906
A
w6196
104563 >= 25*xabs
25*xabs = 104563
B
w6197
20928 >= 5*xabs
5*xabs = 20928
C
w6198
104958 >= 25*xabs
25*xabs = 104958
D
w6199
104961 >= 25*xabs
25*xabs = 104961
C
w6200
104964 >= 25*xabs
25*xabs = 104964
B

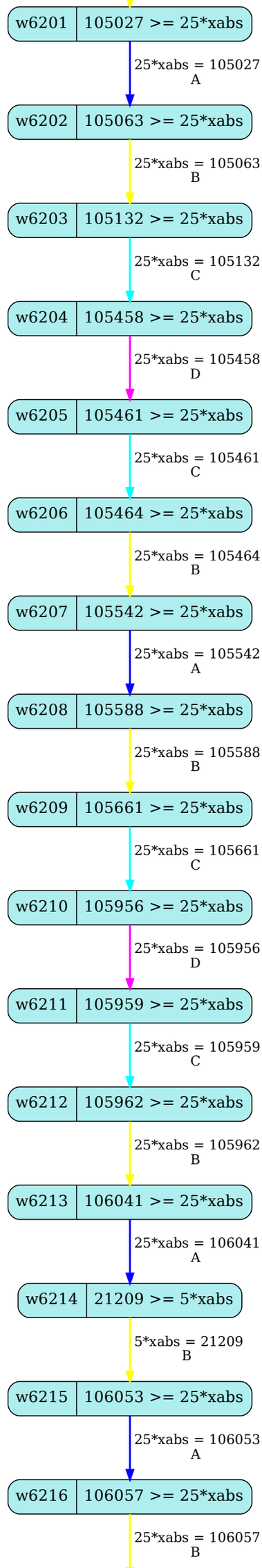
w6201
105027 >= 25*xabs
25*xabs = 105027
A
w6202
105063 >= 25*xabs
25*xabs = 105063
B
w6203
105132 >= 25*xabs
25*xabs = 105132
C
w6204
105458 >= 25*xabs
25*xabs = 105458
D
w6205
105461 >= 25*xabs
25*xabs = 105461
C
w6206
105464 >= 25*xabs
25*xabs = 105464
B
w6207
105542 >= 25*xabs
25*xabs = 105542
A
w6208
105588 >= 25*xabs
25*xabs = 105588
B
w6209
105661 >= 25*xabs
25*xabs = 105661
C
w6210
105956 >= 25*xabs
25*xabs = 105956
D
w6211
105959 >= 25*xabs
25*xabs = 105959
C
w6212
105962 >= 25*xabs
25*xabs = 105962
B
w6213
106041 >= 25*xabs
25*xabs = 106041
A
w6214
21209 >= 5*xabs
5*xabs = 21209
B
w6215
106053 >= 25*xabs
25*xabs = 106053
A
w6216
106057 >= 25*xabs
25*xabs = 106057
B

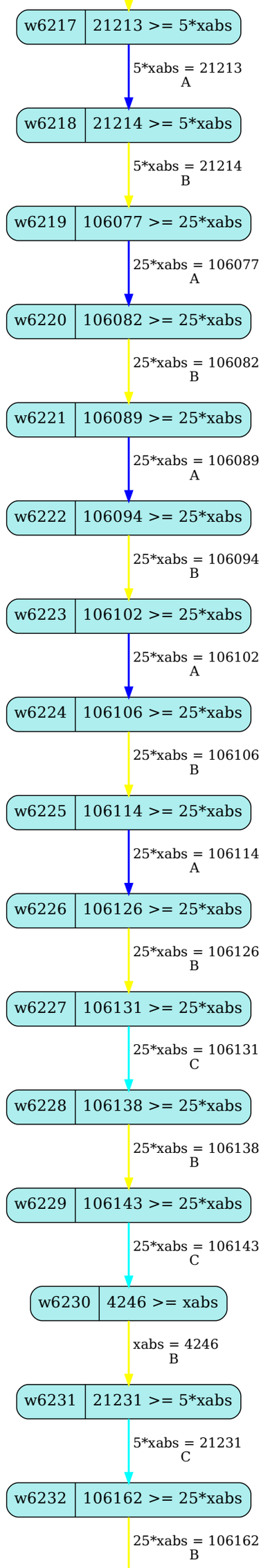
w6217
21213 >= 5*xabs
5*xabs = 21213
A
w6218
21214 >= 5*xabs
5*xabs = 21214
B
w6219
106077 >= 25*xabs
25*xabs = 106077
A
w6220
106082 >= 25*xabs
25*xabs = 106082
B
w6221
106089 >= 25*xabs
25*xabs = 106089
A
w6222
106094 >= 25*xabs
25*xabs = 106094
B
w6223
106102 >= 25*xabs
25*xabs = 106102
A
w6224
106106 >= 25*xabs
25*xabs = 106106
B
w6225
106114 >= 25*xabs
25*xabs = 106114
A
w6226
106126 >= 25*xabs
25*xabs = 106126
B
w6227
106131 >= 25*xabs
25*xabs = 106131
C
w6228
106138 >= 25*xabs
25*xabs = 106138
B
w6229
106143 >= 25*xabs
25*xabs = 106143
C
w6230
4246 >= xabs
xabs = 4246
B
w6231
21231 >= 5*xabs
5*xabs = 21231
C
w6232
106162 >= 25*xabs
25*xabs = 106162
B

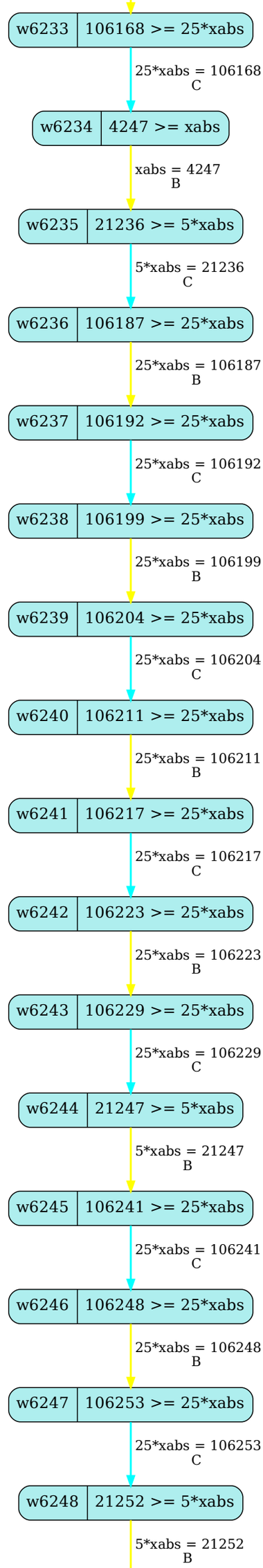
w6233
106168 >= 25*xabs
25*xabs = 106168
C
w6234
4247 >= xabs
xabs = 4247
B
w6235
21236 >= 5*xabs
5*xabs = 21236
C
w6236
106187 >= 25*xabs
25*xabs = 106187
B
w6237
106192 >= 25*xabs
25*xabs = 106192
C
w6238
106199 >= 25*xabs
25*xabs = 106199
B
w6239
106204 >= 25*xabs
25*xabs = 106204
C
w6240
106211 >= 25*xabs
25*xabs = 106211
B
w6241
106217 >= 25*xabs
25*xabs = 106217
C
w6242
106223 >= 25*xabs
25*xabs = 106223
B
w6243
106229 >= 25*xabs
25*xabs = 106229
C
w6244
21247 >= 5*xabs
5*xabs = 21247
B
w6245
106241 >= 25*xabs
25*xabs = 106241
C
w6246
106248 >= 25*xabs
25*xabs = 106248
B
w6247
106253 >= 25*xabs
25*xabs = 106253
C
w6248
21252 >= 5*xabs
5*xabs = 21252
B

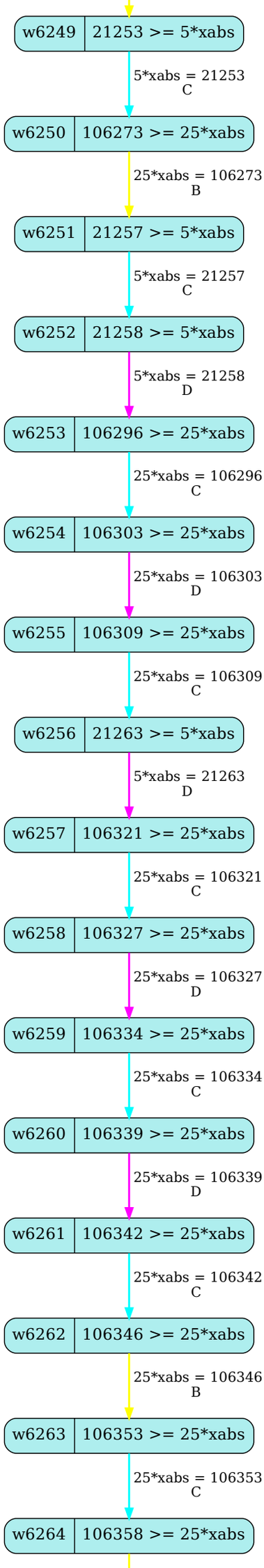
w6249
21253 >= 5*xabs
5*xabs = 21253
C
w6250
106273 >= 25*xabs
25*xabs = 106273
B
w6251
21257 >= 5*xabs
5*xabs = 21257
C
w6252
21258 >= 5*xabs
5*xabs = 21258
D
w6253
106296 >= 25*xabs
25*xabs = 106296
C
w6254
106303 >= 25*xabs
25*xabs = 106303
D
w6255
106309 >= 25*xabs
25*xabs = 106309
C
w6256
21263 >= 5*xabs
5*xabs = 21263
D
w6257
106321 >= 25*xabs
25*xabs = 106321
C
w6258
106327 >= 25*xabs
25*xabs = 106327
D
w6259
106334 >= 25*xabs
25*xabs = 106334
C
w6260
106339 >= 25*xabs
25*xabs = 106339
D
w6261
106342 >= 25*xabs
25*xabs = 106342
C
w6262
106346 >= 25*xabs
25*xabs = 106346
B
w6263
106353 >= 25*xabs
25*xabs = 106353
C
w6264
106358 >= 25*xabs

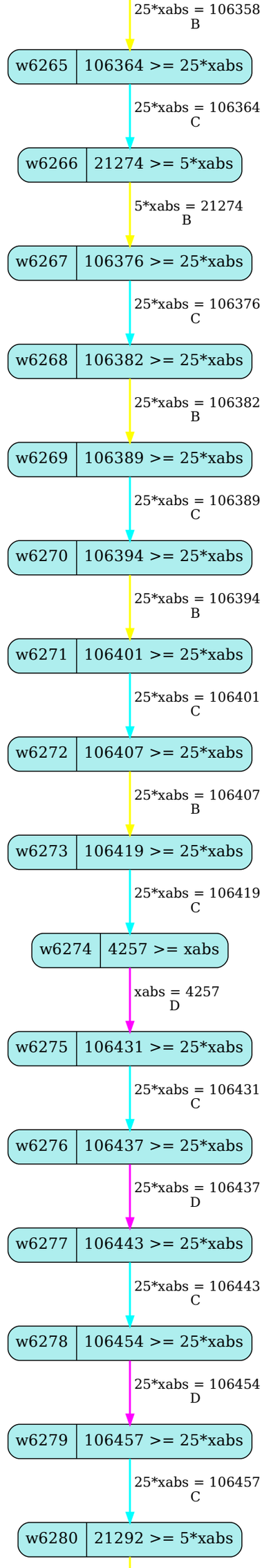
25*xabs = 106358
B
w6265
106364 >= 25*xabs
25*xabs = 106364
C
w6266
21274 >= 5*xabs
5*xabs = 21274
B
w6267
106376 >= 25*xabs
25*xabs = 106376
C
w6268
106382 >= 25*xabs
25*xabs = 106382
B
w6269
106389 >= 25*xabs
25*xabs = 106389
C
w6270
106394 >= 25*xabs
25*xabs = 106394
B
w6271
106401 >= 25*xabs
25*xabs = 106401
C
w6272
106407 >= 25*xabs
25*xabs = 106407
B
w6273
106419 >= 25*xabs
25*xabs = 106419
C
w6274
4257 >= xabs
xabs = 4257
D
w6275
106431 >= 25*xabs
25*xabs = 106431
C
w6276
106437 >= 25*xabs
25*xabs = 106437
D
w6277
106443 >= 25*xabs
25*xabs = 106443
C
w6278
106454 >= 25*xabs
25*xabs = 106454
D
w6279
106457 >= 25*xabs
25*xabs = 106457
C
w6280
21292 >= 5*xabs

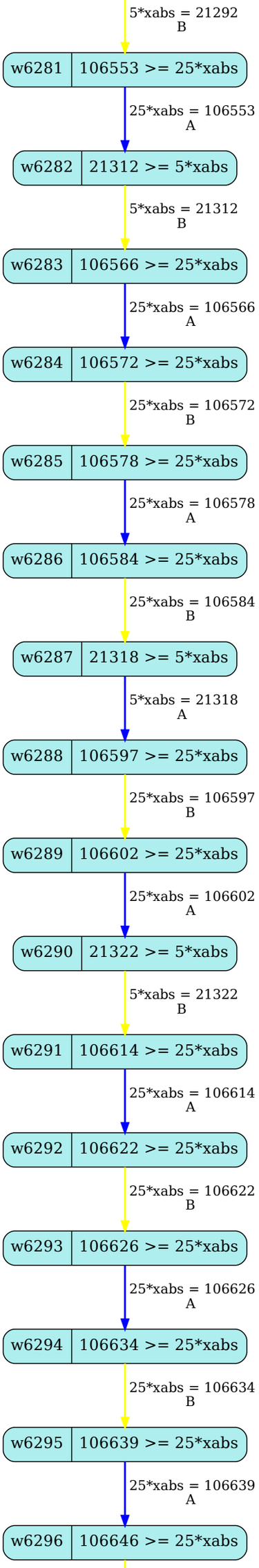
5*xabs = 21292
B
w6281
106553 >= 25*xabs
25*xabs = 106553
A
w6282
21312 >= 5*xabs
5*xabs = 21312
B
w6283
106566 >= 25*xabs
25*xabs = 106566
A
w6284
106572 >= 25*xabs
25*xabs = 106572
B
w6285
106578 >= 25*xabs
25*xabs = 106578
A
w6286
106584 >= 25*xabs
25*xabs = 106584
B
w6287
21318 >= 5*xabs
5*xabs = 21318
A
w6288
106597 >= 25*xabs
25*xabs = 106597
B
w6289
106602 >= 25*xabs
25*xabs = 106602
A
w6290
21322 >= 5*xabs
5*xabs = 21322
B
w6291
106614 >= 25*xabs
25*xabs = 106614
A
w6292
106622 >= 25*xabs
25*xabs = 106622
B
w6293
106626 >= 25*xabs
25*xabs = 106626
A
w6294
106634 >= 25*xabs
25*xabs = 106634
B
w6295
106639 >= 25*xabs
25*xabs = 106639
A
w6296
106646 >= 25*xabs

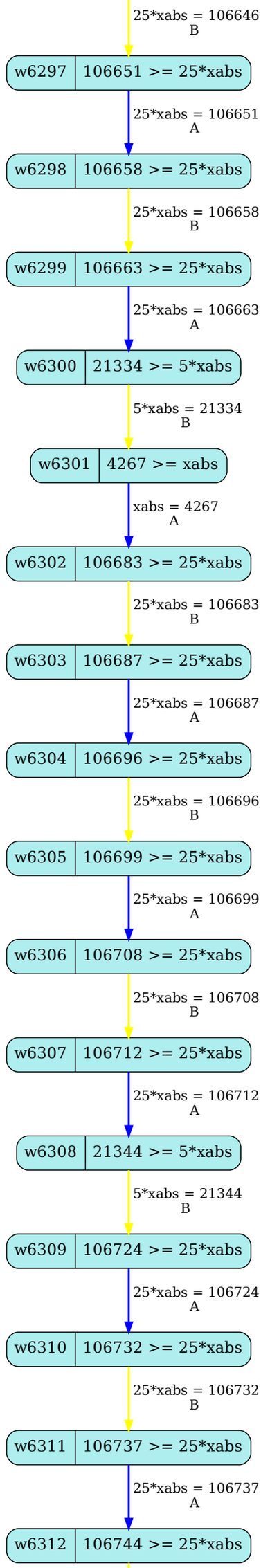
25*xabs = 106646
B
w6297
106651 >= 25*xabs
25*xabs = 106651
A
w6298
106658 >= 25*xabs
25*xabs = 106658
B
w6299
106663 >= 25*xabs
25*xabs = 106663
A
w6300
21334 >= 5*xabs
5*xabs = 21334
B
w6301
4267 >= xabs
xabs = 4267
A
w6302
106683 >= 25*xabs
25*xabs = 106683
B
w6303
106687 >= 25*xabs
25*xabs = 106687
A
w6304
106696 >= 25*xabs
25*xabs = 106696
B
w6305
106699 >= 25*xabs
25*xabs = 106699
A
w6306
106708 >= 25*xabs
25*xabs = 106708
B
w6307
106712 >= 25*xabs
25*xabs = 106712
A
w6308
21344 >= 5*xabs
5*xabs = 21344
B
w6309
106724 >= 25*xabs
25*xabs = 106724
A
w6310
106732 >= 25*xabs
25*xabs = 106732
B
w6311
106737 >= 25*xabs
25*xabs = 106737
A
w6312
106744 >= 25*xabs

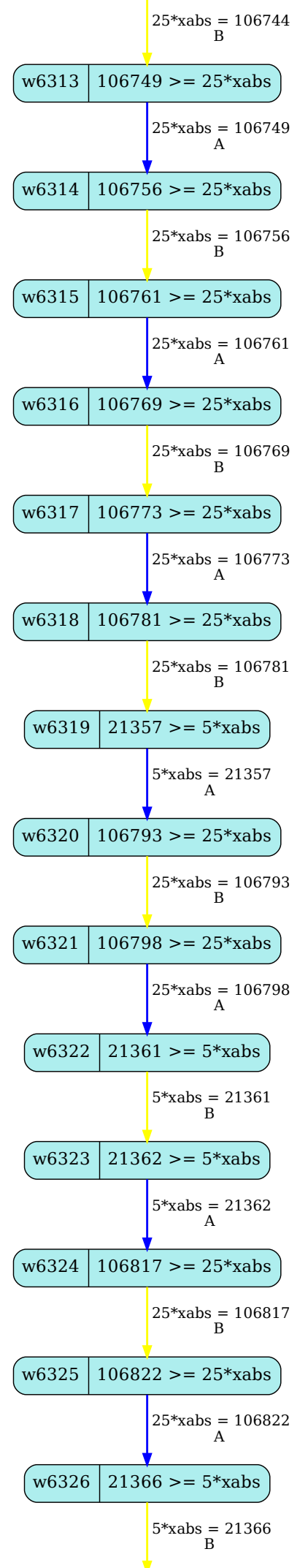
25*xabs = 106744
B
w6313
106749 >= 25*xabs
25*xabs = 106749
A
w6314
106756 >= 25*xabs
25*xabs = 106756
B
w6315
106761 >= 25*xabs
25*xabs = 106761
A
w6316
106769 >= 25*xabs
25*xabs = 106769
B
w6317
106773 >= 25*xabs
25*xabs = 106773
A
w6318
106781 >= 25*xabs
25*xabs = 106781
B
w6319
21357 >= 5*xabs
5*xabs = 21357
A
w6320
106793 >= 25*xabs
25*xabs = 106793
B
w6321
106798 >= 25*xabs
25*xabs = 106798
A
w6322
21361 >= 5*xabs
5*xabs = 21361
B
w6323
21362 >= 5*xabs
5*xabs = 21362
A
w6324
106817 >= 25*xabs
25*xabs = 106817
B
w6325
106822 >= 25*xabs
25*xabs = 106822
A
w6326
21366 >= 5*xabs
5*xabs = 21366
B

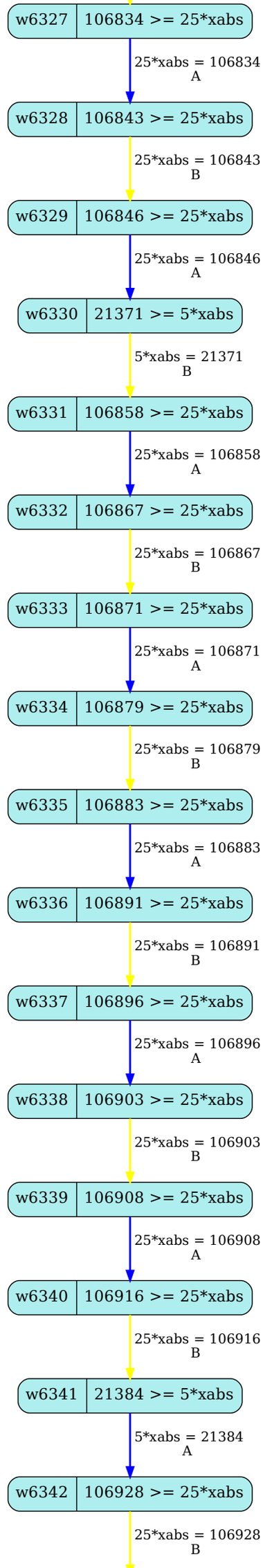
w6327
106834 >= 25*xabs
25*xabs = 106834
A
w6328
106843 >= 25*xabs
25*xabs = 106843
B
w6329
106846 >= 25*xabs
25*xabs = 106846
A
w6330
21371 >= 5*xabs
5*xabs = 21371
B
w6331
106858 >= 25*xabs
25*xabs = 106858
A
w6332
106867 >= 25*xabs
25*xabs = 106867
B
w6333
106871 >= 25*xabs
25*xabs = 106871
A
w6334
106879 >= 25*xabs
25*xabs = 106879
B
w6335
106883 >= 25*xabs
25*xabs = 106883
A
w6336
106891 >= 25*xabs
25*xabs = 106891
B
w6337
106896 >= 25*xabs
25*xabs = 106896
A
w6338
106903 >= 25*xabs
25*xabs = 106903
B
w6339
106908 >= 25*xabs
25*xabs = 106908
A
w6340
106916 >= 25*xabs
25*xabs = 106916
B
w6341
21384 >= 5*xabs
5*xabs = 21384
A
w6342
106928 >= 25*xabs
25*xabs = 106928
B

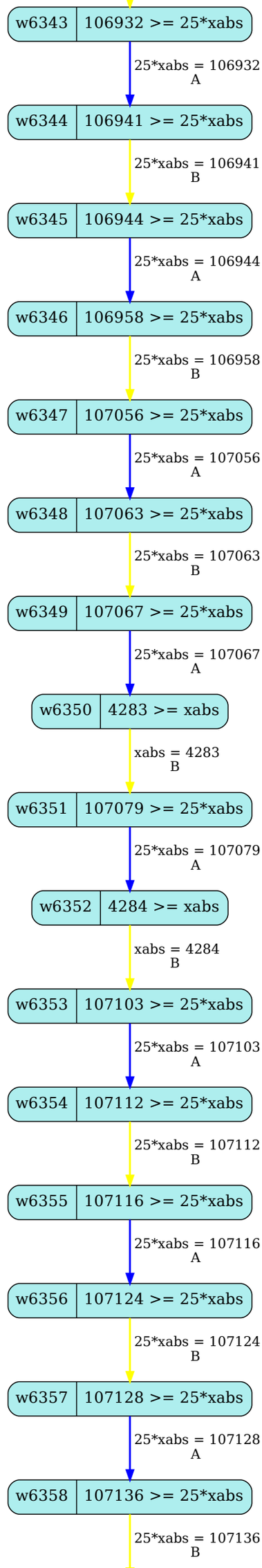
w6343
106932 >= 25*xabs
25*xabs = 106932
A
w6344
106941 >= 25*xabs
25*xabs = 106941
B
w6345
106944 >= 25*xabs
25*xabs = 106944
A
w6346
106958 >= 25*xabs
25*xabs = 106958
B
w6347
107056 >= 25*xabs
25*xabs = 107056
A
w6348
107063 >= 25*xabs
25*xabs = 107063
B
w6349
107067 >= 25*xabs
25*xabs = 107067
A
w6350
4283 >= xabs
xabs = 4283
B
w6351
107079 >= 25*xabs
25*xabs = 107079
A
w6352
4284 >= xabs
xabs = 4284
B
w6353
107103 >= 25*xabs
25*xabs = 107103
A
w6354
107112 >= 25*xabs
25*xabs = 107112
B
w6355
107116 >= 25*xabs
25*xabs = 107116
A
w6356
107124 >= 25*xabs
25*xabs = 107124
B
w6357
107128 >= 25*xabs
25*xabs = 107128
A
w6358
107136 >= 25*xabs
25*xabs = 107136
B

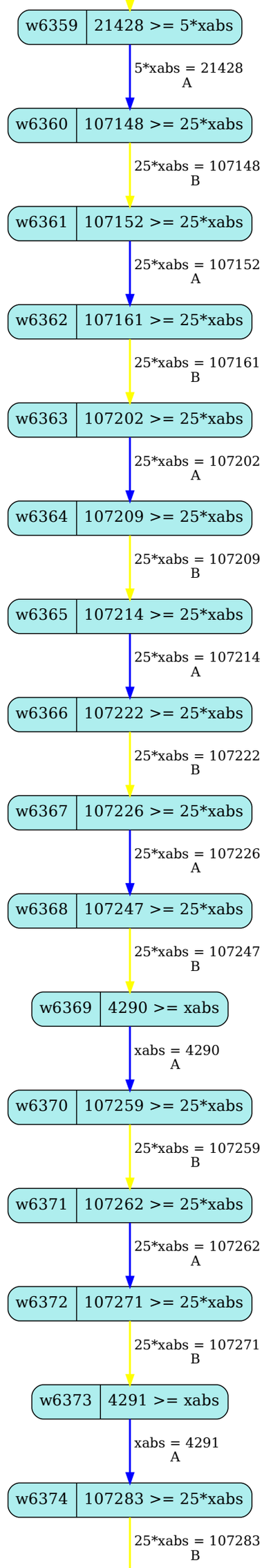
w6359
21428 >= 5*xabs
5*xabs = 21428
A
w6360
107148 >= 25*xabs
25*xabs = 107148
B
w6361
107152 >= 25*xabs
25*xabs = 107152
A
w6362
107161 >= 25*xabs
25*xabs = 107161
B
w6363
107202 >= 25*xabs
25*xabs = 107202
A
w6364
107209 >= 25*xabs
25*xabs = 107209
B
w6365
107214 >= 25*xabs
25*xabs = 107214
A
w6366
107222 >= 25*xabs
25*xabs = 107222
B
w6367
107226 >= 25*xabs
25*xabs = 107226
A
w6368
107247 >= 25*xabs
25*xabs = 107247
B
w6369
4290 >= xabs
xabs = 4290
A
w6370
107259 >= 25*xabs
25*xabs = 107259
B
w6371
107262 >= 25*xabs
25*xabs = 107262
A
w6372
107271 >= 25*xabs
25*xabs = 107271
B
w6373
4291 >= xabs
xabs = 4291
A
w6374
107283 >= 25*xabs
25*xabs = 107283
B

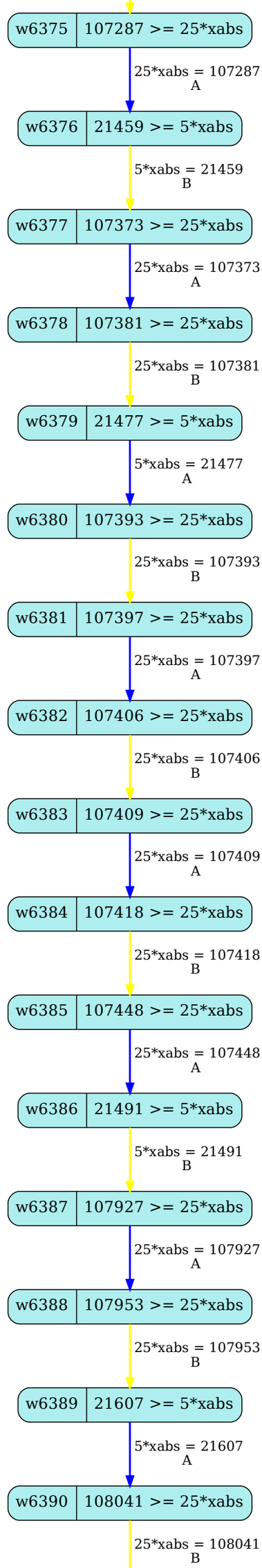
w6375
107287 >= 25*xabs
25*xabs = 107287
A
w6376
21459 >= 5*xabs
5*xabs = 21459
B
w6377
107373 >= 25*xabs
25*xabs = 107373
A
w6378
107381 >= 25*xabs
25*xabs = 107381
B
w6379
21477 >= 5*xabs
5*xabs = 21477
A
w6380
107393 >= 25*xabs
25*xabs = 107393
B
w6381
107397 >= 25*xabs
25*xabs = 107397
A
w6382
107406 >= 25*xabs
25*xabs = 107406
B
w6383
107409 >= 25*xabs
25*xabs = 107409
A
w6384
107418 >= 25*xabs
25*xabs = 107418
B
w6385
107448 >= 25*xabs
25*xabs = 107448
A
w6386
21491 >= 5*xabs
5*xabs = 21491
B
w6387
107927 >= 25*xabs
25*xabs = 107927
A
w6388
107953 >= 25*xabs
25*xabs = 107953
B
w6389
21607 >= 5*xabs
5*xabs = 21607
A
w6390
108041 >= 25*xabs
25*xabs = 108041
B

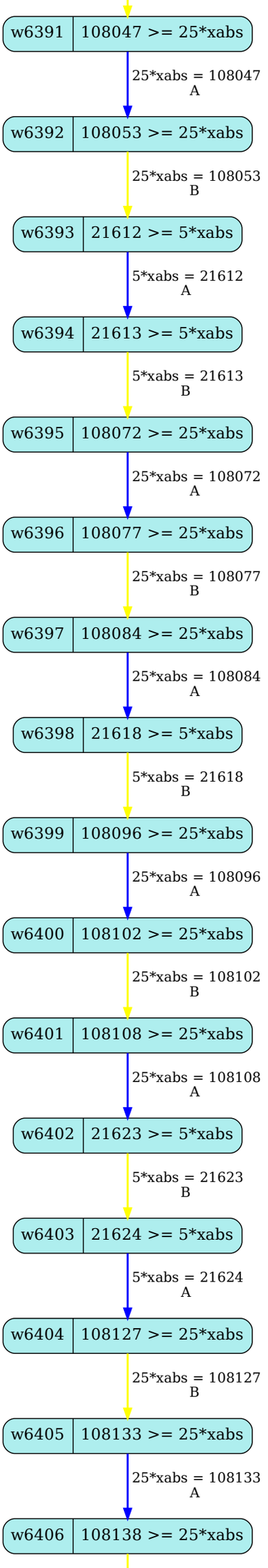
w6391
108047 >= 25*xabs
25*xabs = 108047
A
w6392
108053 >= 25*xabs
25*xabs = 108053
B
w6393
21612 >= 5*xabs
5*xabs = 21612
A
w6394
21613 >= 5*xabs
5*xabs = 21613
B
w6395
108072 >= 25*xabs
25*xabs = 108072
A
w6396
108077 >= 25*xabs
25*xabs = 108077
B
w6397
108084 >= 25*xabs
25*xabs = 108084
A
w6398
21618 >= 5*xabs
5*xabs = 21618
B
w6399
108096 >= 25*xabs
25*xabs = 108096
A
w6400
108102 >= 25*xabs
25*xabs = 108102
B
w6401
108108 >= 25*xabs
25*xabs = 108108
A
w6402
21623 >= 5*xabs
5*xabs = 21623
B
w6403
21624 >= 5*xabs
5*xabs = 21624
A
w6404
108127 >= 25*xabs
25*xabs = 108127
B
w6405
108133 >= 25*xabs
25*xabs = 108133
A
w6406
108138 >= 25*xabs

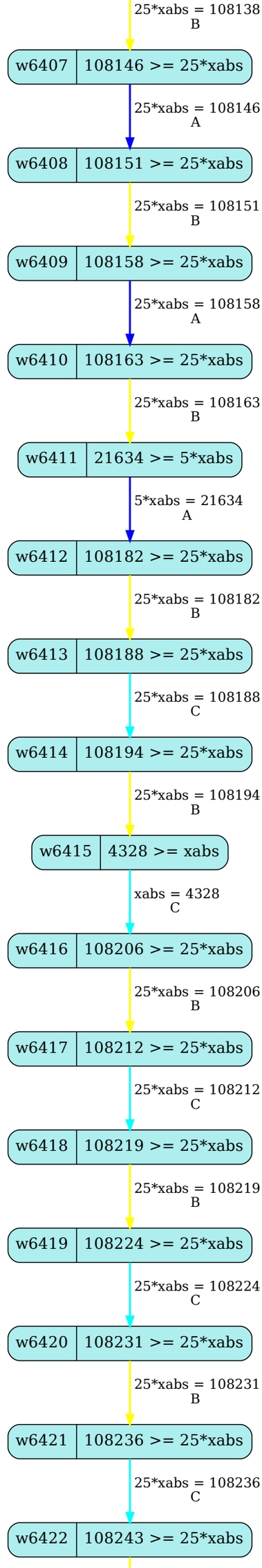
25*xabs = 108138
B
w6407
108146 >= 25*xabs
25*xabs = 108146
A
w6408
108151 >= 25*xabs
25*xabs = 108151
B
w6409
108158 >= 25*xabs
25*xabs = 108158
A
w6410
108163 >= 25*xabs
25*xabs = 108163
B
w6411
21634 >= 5*xabs
5*xabs = 21634
A
w6412
108182 >= 25*xabs
25*xabs = 108182
B
w6413
108188 >= 25*xabs
25*xabs = 108188
C
w6414
108194 >= 25*xabs
25*xabs = 108194
B
w6415
4328 >= xabs
xabs = 4328
C
w6416
108206 >= 25*xabs
25*xabs = 108206
B
w6417
108212 >= 25*xabs
25*xabs = 108212
C
w6418
108219 >= 25*xabs
25*xabs = 108219
B
w6419
108224 >= 25*xabs
25*xabs = 108224
C
w6420
108231 >= 25*xabs
25*xabs = 108231
B
w6421
108236 >= 25*xabs
25*xabs = 108236
C
w6422
108243 >= 25*xabs

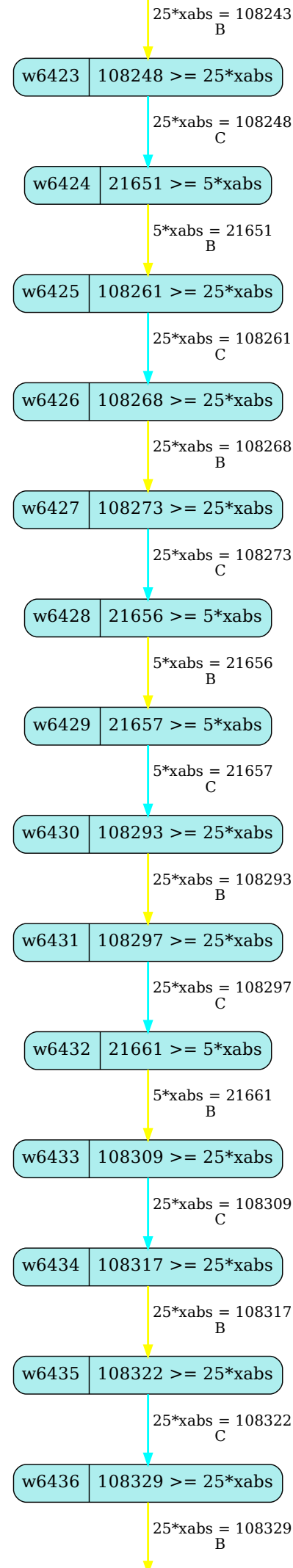
25*xabs = 108243
B
w6423
108248 >= 25*xabs
25*xabs = 108248
C
w6424
21651 >= 5*xabs
5*xabs = 21651
B
w6425
108261 >= 25*xabs
25*xabs = 108261
C
w6426
108268 >= 25*xabs
25*xabs = 108268
B
w6427
108273 >= 25*xabs
25*xabs = 108273
C
w6428
21656 >= 5*xabs
5*xabs = 21656
B
w6429
21657 >= 5*xabs
5*xabs = 21657
C
w6430
108293 >= 25*xabs
25*xabs = 108293
B
w6431
108297 >= 25*xabs
25*xabs = 108297
C
w6432
21661 >= 5*xabs
5*xabs = 21661
B
w6433
108309 >= 25*xabs
25*xabs = 108309
C
w6434
108317 >= 25*xabs
25*xabs = 108317
B
w6435
108322 >= 25*xabs
25*xabs = 108322
C
w6436
108329 >= 25*xabs
25*xabs = 108329
B

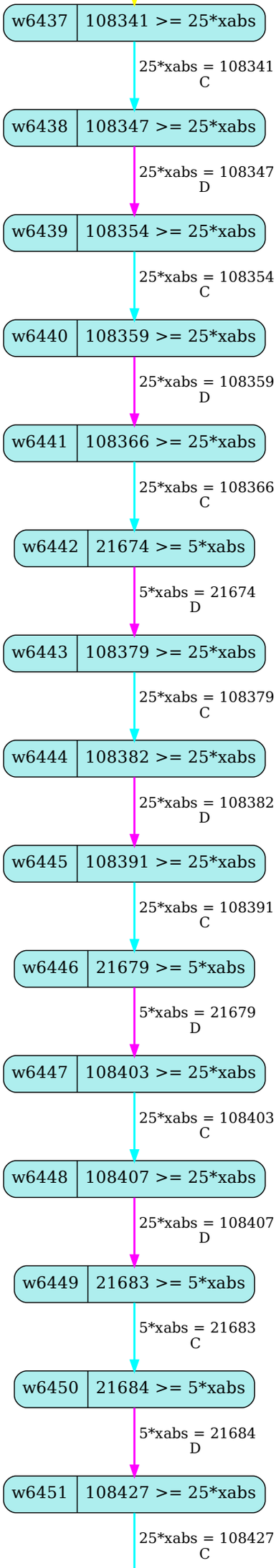
w6437
108341 >= 25*xabs
25*xabs = 108341
C
w6438
108347 >= 25*xabs
25*xabs = 108347
D
w6439
108354 >= 25*xabs
25*xabs = 108354
C
w6440
108359 >= 25*xabs
25*xabs = 108359
D
w6441
108366 >= 25*xabs
25*xabs = 108366
C
w6442
21674 >= 5*xabs
5*xabs = 21674
D
w6443
108379 >= 25*xabs
25*xabs = 108379
C
w6444
108382 >= 25*xabs
25*xabs = 108382
D
w6445
108391 >= 25*xabs
25*xabs = 108391
C
w6446
21679 >= 5*xabs
5*xabs = 21679
D
w6447
108403 >= 25*xabs
25*xabs = 108403
C
w6448
108407 >= 25*xabs
25*xabs = 108407
D
w6449
21683 >= 5*xabs
5*xabs = 21683
C
w6450
21684 >= 5*xabs
5*xabs = 21684
D
w6451
108427 >= 25*xabs
25*xabs = 108427
C

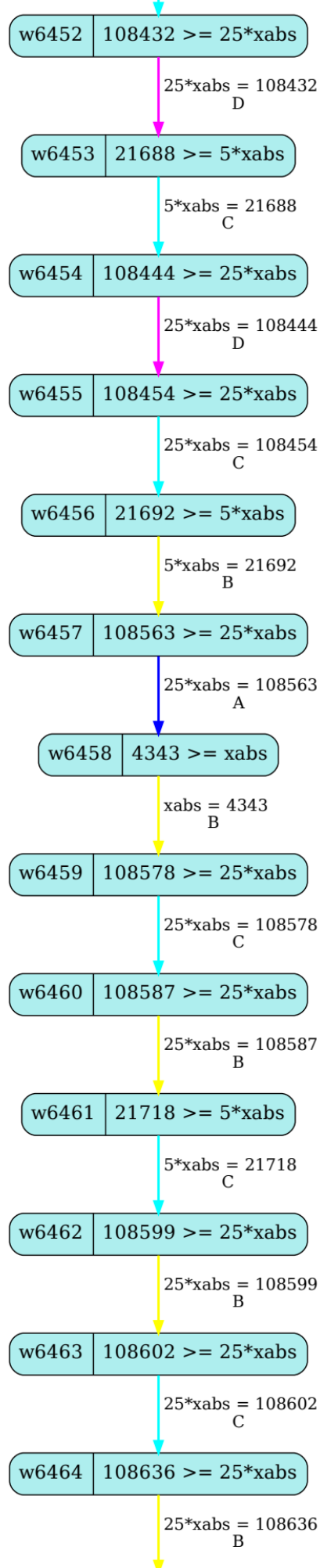
w6452
108432 >= 25*xabs
25*xabs = 108432
D
w6453
21688 >= 5*xabs
5*xabs = 21688
C
w6454
108444 >= 25*xabs
25*xabs = 108444
D
w6455
108454 >= 25*xabs
25*xabs = 108454
C
w6456
21692 >= 5*xabs
5*xabs = 21692
B
w6457
108563 >= 25*xabs
25*xabs = 108563
A
w6458
4343 >= xabs
xabs = 4343
B
w6459
108578 >= 25*xabs
25*xabs = 108578
C
w6460
108587 >= 25*xabs
25*xabs = 108587
B
w6461
21718 >= 5*xabs
5*xabs = 21718
C
w6462
108599 >= 25*xabs
25*xabs = 108599
B
w6463
108602 >= 25*xabs
25*xabs = 108602
C
w6464
108636 >= 25*xabs
25*xabs = 108636
B

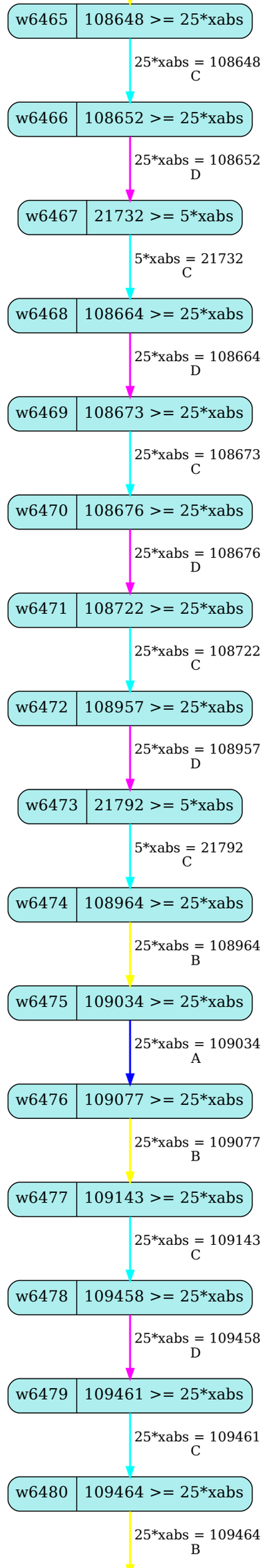
w6465
108648 >= 25*xabs
25*xabs = 108648
C
w6466
108652 >= 25*xabs
25*xabs = 108652
D
w6467
21732 >= 5*xabs
5*xabs = 21732
C
w6468
108664 >= 25*xabs
25*xabs = 108664
D
w6469
108673 >= 25*xabs
25*xabs = 108673
C
w6470
108676 >= 25*xabs
25*xabs = 108676
D
w6471
108722 >= 25*xabs
25*xabs = 108722
C
w6472
108957 >= 25*xabs
25*xabs = 108957
D
w6473
21792 >= 5*xabs
5*xabs = 21792
C
w6474
108964 >= 25*xabs
25*xabs = 108964
B
w6475
109034 >= 25*xabs
25*xabs = 109034
A
w6476
109077 >= 25*xabs
25*xabs = 109077
B
w6477
109143 >= 25*xabs
25*xabs = 109143
C
w6478
109458 >= 25*xabs
25*xabs = 109458
D
w6479
109461 >= 25*xabs
25*xabs = 109461
C
w6480
109464 >= 25*xabs
25*xabs = 109464
B

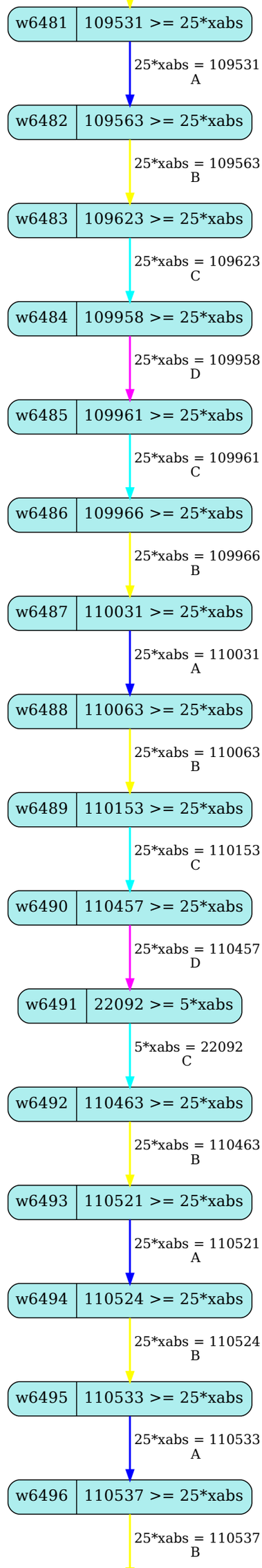
w6481
109531 >= 25*xabs
25*xabs = 109531
A
w6482
109563 >= 25*xabs
25*xabs = 109563
B
w6483
109623 >= 25*xabs
25*xabs = 109623
C
w6484
109958 >= 25*xabs
25*xabs = 109958
D
w6485
109961 >= 25*xabs
25*xabs = 109961
C
w6486
109966 >= 25*xabs
25*xabs = 109966
B
w6487
110031 >= 25*xabs
25*xabs = 110031
A
w6488
110063 >= 25*xabs
25*xabs = 110063
B
w6489
110153 >= 25*xabs
25*xabs = 110153
C
w6490
110457 >= 25*xabs
25*xabs = 110457
D
w6491
22092 >= 5*xabs
5*xabs = 22092
C
w6492
110463 >= 25*xabs
25*xabs = 110463
B
w6493
110521 >= 25*xabs
25*xabs = 110521
A
w6494
110524 >= 25*xabs
25*xabs = 110524
B
w6495
110533 >= 25*xabs
25*xabs = 110533
A
w6496
110537 >= 25*xabs
25*xabs = 110537
B

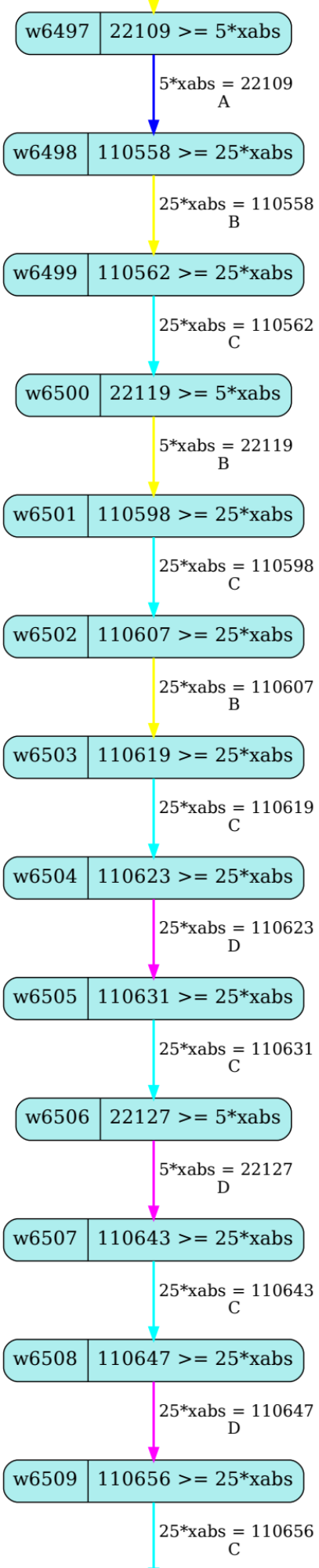
w6497
22109 >= 5*xabs
5*xabs = 22109
A
w6498
110558 >= 25*xabs
25*xabs = 110558
B
w6499
110562 >= 25*xabs
25*xabs = 110562
C
w6500
22119 >= 5*xabs
5*xabs = 22119
B
w6501
110598 >= 25*xabs
25*xabs = 110598
C
w6502
110607 >= 25*xabs
25*xabs = 110607
B
w6503
110619 >= 25*xabs
25*xabs = 110619
C
w6504
110623 >= 25*xabs
25*xabs = 110623
D
w6505
110631 >= 25*xabs
25*xabs = 110631
C
w6506
22127 >= 5*xabs
5*xabs = 22127
D
w6507
110643 >= 25*xabs
25*xabs = 110643
C
w6508
110647 >= 25*xabs
25*xabs = 110647
D
w6509
110656 >= 25*xabs
25*xabs = 110656
C

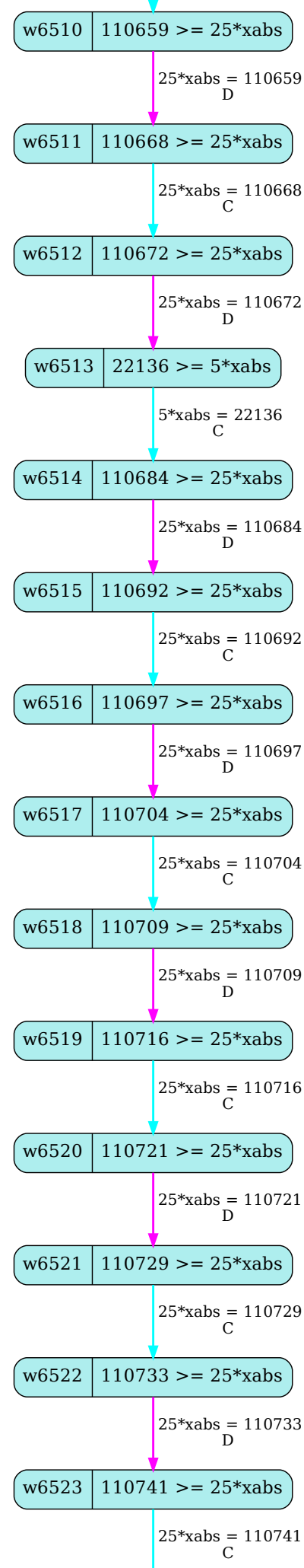
w6510
110659 >= 25*xabs
25*xabs = 110659
D
w6511
110668 >= 25*xabs
25*xabs = 110668
C
w6512
110672 >= 25*xabs
25*xabs = 110672
D
w6513
22136 >= 5*xabs
5*xabs = 22136
C
w6514
110684 >= 25*xabs
25*xabs = 110684
D
w6515
110692 >= 25*xabs
25*xabs = 110692
C
w6516
110697 >= 25*xabs
25*xabs = 110697
D
w6517
110704 >= 25*xabs
25*xabs = 110704
C
w6518
110709 >= 25*xabs
25*xabs = 110709
D
w6519
110716 >= 25*xabs
25*xabs = 110716
C
w6520
110721 >= 25*xabs
25*xabs = 110721
D
w6521
110729 >= 25*xabs
25*xabs = 110729
C
w6522
110733 >= 25*xabs
25*xabs = 110733
D
w6523
110741 >= 25*xabs
25*xabs = 110741
C

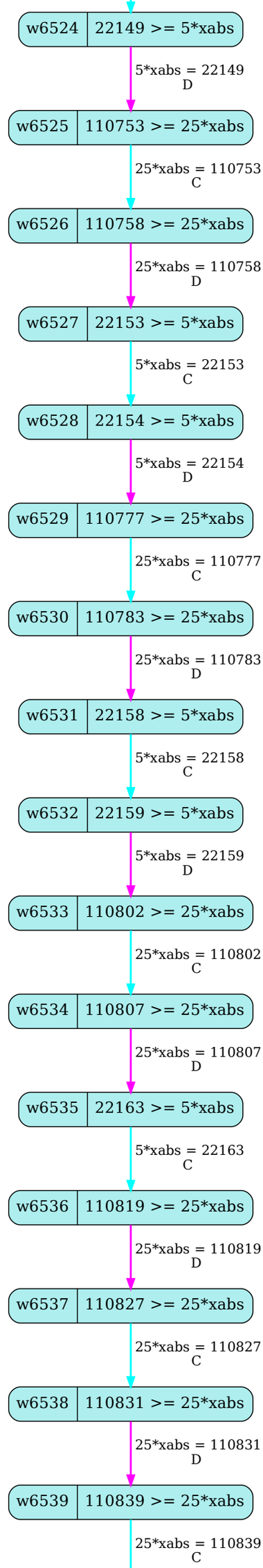
w6524
22149 >= 5*xabs
5*xabs = 22149
D
w6525
110753 >= 25*xabs
25*xabs = 110753
C
w6526
110758 >= 25*xabs
25*xabs = 110758
D
w6527
22153 >= 5*xabs
5*xabs = 22153
C
w6528
22154 >= 5*xabs
5*xabs = 22154
D
w6529
110777 >= 25*xabs
25*xabs = 110777
C
w6530
110783 >= 25*xabs
25*xabs = 110783
D
w6531
22158 >= 5*xabs
5*xabs = 22158
C
w6532
22159 >= 5*xabs
5*xabs = 22159
D
w6533
110802 >= 25*xabs
25*xabs = 110802
C
w6534
110807 >= 25*xabs
25*xabs = 110807
D
w6535
22163 >= 5*xabs
5*xabs = 22163
C
w6536
110819 >= 25*xabs
25*xabs = 110819
D
w6537
110827 >= 25*xabs
25*xabs = 110827
C
w6538
110831 >= 25*xabs
25*xabs = 110831
D
w6539
110839 >= 25*xabs
25*xabs = 110839
C

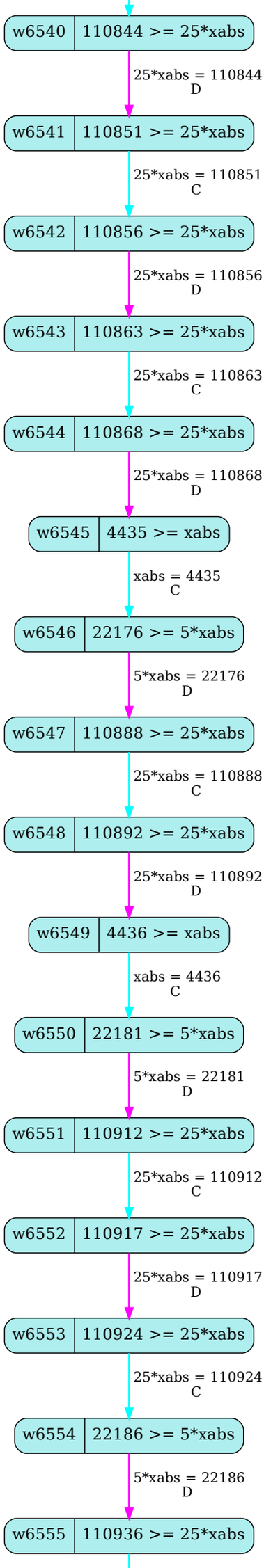
w6540
110844 >= 25*xabs
25*xabs = 110844
D
w6541
110851 >= 25*xabs
25*xabs = 110851
C
w6542
110856 >= 25*xabs
25*xabs = 110856
D
w6543
110863 >= 25*xabs
25*xabs = 110863
C
w6544
110868 >= 25*xabs
25*xabs = 110868
D
w6545
4435 >= xabs
xabs = 4435
C
w6546
22176 >= 5*xabs
5*xabs = 22176
D
w6547
110888 >= 25*xabs
25*xabs = 110888
C
w6548
110892 >= 25*xabs
25*xabs = 110892
D
w6549
4436 >= xabs
xabs = 4436
C
w6550
22181 >= 5*xabs
5*xabs = 22181
D
w6551
110912 >= 25*xabs
25*xabs = 110912
C
w6552
110917 >= 25*xabs
25*xabs = 110917
D
w6553
110924 >= 25*xabs
25*xabs = 110924
C
w6554
22186 >= 5*xabs
5*xabs = 22186
D
w6555
110936 >= 25*xabs

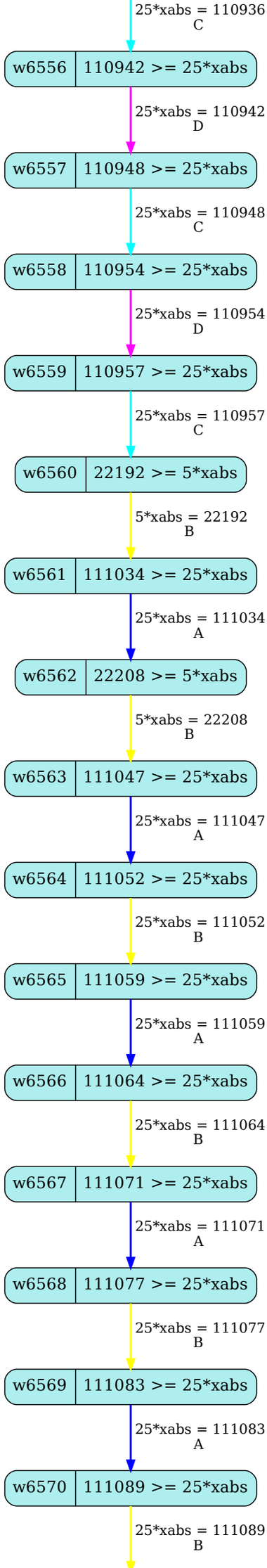
25*xabs = 110936
C
w6556
110942 >= 25*xabs
25*xabs = 110942
D
w6557
110948 >= 25*xabs
25*xabs = 110948
C
w6558
110954 >= 25*xabs
25*xabs = 110954
D
w6559
110957 >= 25*xabs
25*xabs = 110957
C
w6560
22192 >= 5*xabs
5*xabs = 22192
B
w6561
111034 >= 25*xabs
25*xabs = 111034
A
w6562
22208 >= 5*xabs
5*xabs = 22208
B
w6563
111047 >= 25*xabs
25*xabs = 111047
A
w6564
111052 >= 25*xabs
25*xabs = 111052
B
w6565
111059 >= 25*xabs
25*xabs = 111059
A
w6566
111064 >= 25*xabs
25*xabs = 111064
B
w6567
111071 >= 25*xabs
25*xabs = 111071
A
w6568
111077 >= 25*xabs
25*xabs = 111077
B
w6569
111083 >= 25*xabs
25*xabs = 111083
A
w6570
111089 >= 25*xabs
25*xabs = 111089
B

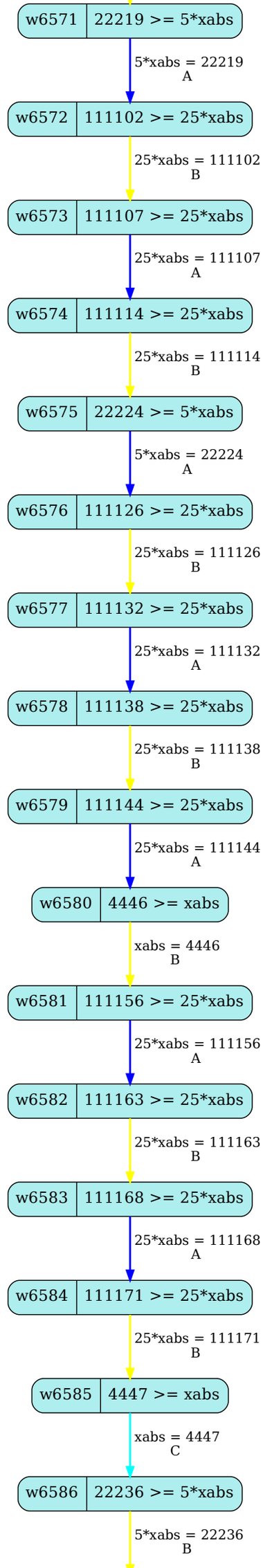
w6571
22219 >= 5*xabs
5*xabs = 22219
A
w6572
111102 >= 25*xabs
25*xabs = 111102
B
w6573
111107 >= 25*xabs
25*xabs = 111107
A
w6574
111114 >= 25*xabs
25*xabs = 111114
B
w6575
22224 >= 5*xabs
5*xabs = 22224
A
w6576
111126 >= 25*xabs
25*xabs = 111126
B
w6577
111132 >= 25*xabs
25*xabs = 111132
A
w6578
111138 >= 25*xabs
25*xabs = 111138
B
w6579
111144 >= 25*xabs
25*xabs = 111144
A
w6580
4446 >= xabs
xabs = 4446
B
w6581
111156 >= 25*xabs
25*xabs = 111156
A
w6582
111163 >= 25*xabs
25*xabs = 111163
B
w6583
111168 >= 25*xabs
25*xabs = 111168
A
w6584
111171 >= 25*xabs
25*xabs = 111171
B
w6585
4447 >= xabs
xabs = 4447
C
w6586
22236 >= 5*xabs
5*xabs = 22236
B

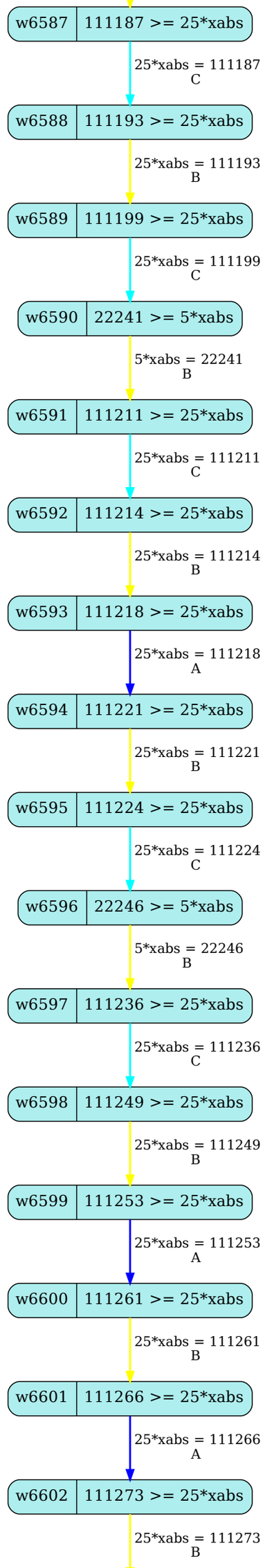
w6587
111187 >= 25*xabs
25*xabs = 111187
C
w6588
111193 >= 25*xabs
25*xabs = 111193
B
w6589
111199 >= 25*xabs
25*xabs = 111199
C
w6590
22241 >= 5*xabs
5*xabs = 22241
B
w6591
111211 >= 25*xabs
25*xabs = 111211
C
w6592
111214 >= 25*xabs
25*xabs = 111214
B
w6593
111218 >= 25*xabs
25*xabs = 111218
A
w6594
111221 >= 25*xabs
25*xabs = 111221
B
w6595
111224 >= 25*xabs
25*xabs = 111224
C
w6596
22246 >= 5*xabs
5*xabs = 22246
B
w6597
111236 >= 25*xabs
25*xabs = 111236
C
w6598
111249 >= 25*xabs
25*xabs = 111249
B
w6599
111253 >= 25*xabs
25*xabs = 111253
A
w6600
111261 >= 25*xabs
25*xabs = 111261
B
w6601
111266 >= 25*xabs
25*xabs = 111266
A
w6602
111273 >= 25*xabs
25*xabs = 111273
B

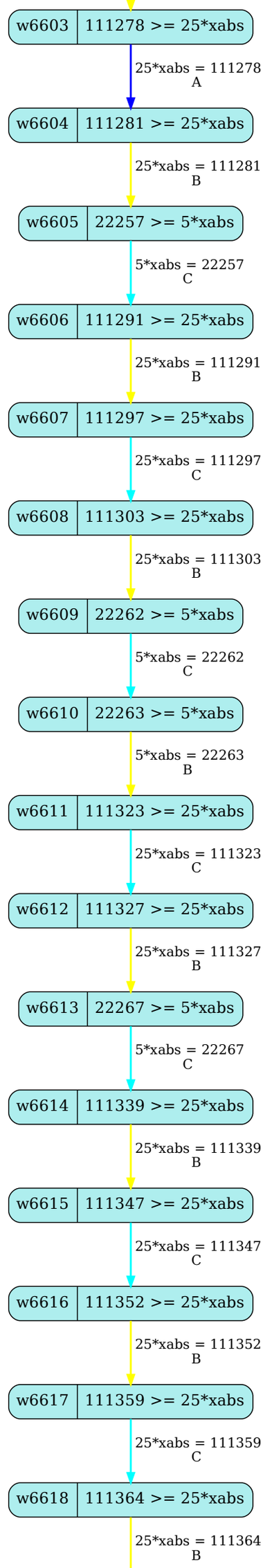
w6603
111278 >= 25*xabs
25*xabs = 111278
A
w6604
111281 >= 25*xabs
25*xabs = 111281
B
w6605
22257 >= 5*xabs
5*xabs = 22257
C
w6606
111291 >= 25*xabs
25*xabs = 111291
B
w6607
111297 >= 25*xabs
25*xabs = 111297
C
w6608
111303 >= 25*xabs
25*xabs = 111303
B
w6609
22262 >= 5*xabs
5*xabs = 22262
C
w6610
22263 >= 5*xabs
5*xabs = 22263
B
w6611
111323 >= 25*xabs
25*xabs = 111323
C
w6612
111327 >= 25*xabs
25*xabs = 111327
B
w6613
22267 >= 5*xabs
5*xabs = 22267
C
w6614
111339 >= 25*xabs
25*xabs = 111339
B
w6615
111347 >= 25*xabs
25*xabs = 111347
C
w6616
111352 >= 25*xabs
25*xabs = 111352
B
w6617
111359 >= 25*xabs
25*xabs = 111359
C
w6618
111364 >= 25*xabs
25*xabs = 111364
B

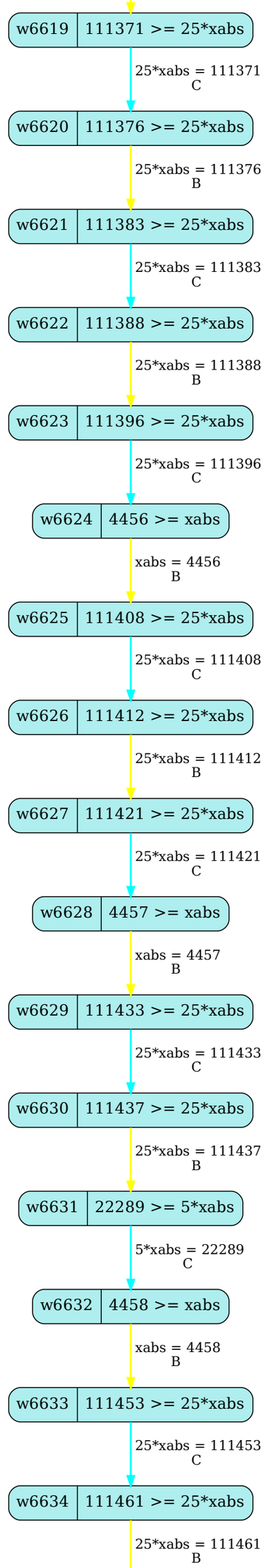
w6619
111371 >= 25*xabs
25*xabs = 111371
C
w6620
111376 >= 25*xabs
25*xabs = 111376
B
w6621
111383 >= 25*xabs
25*xabs = 111383
C
w6622
111388 >= 25*xabs
25*xabs = 111388
B
w6623
111396 >= 25*xabs
25*xabs = 111396
C
w6624
4456 >= xabs
xabs = 4456
B
w6625
111408 >= 25*xabs
25*xabs = 111408
C
w6626
111412 >= 25*xabs
25*xabs = 111412
B
w6627
111421 >= 25*xabs
25*xabs = 111421
C
w6628
4457 >= xabs
xabs = 4457
B
w6629
111433 >= 25*xabs
25*xabs = 111433
C
w6630
111437 >= 25*xabs
25*xabs = 111437
B
w6631
22289 >= 5*xabs
5*xabs = 22289
C
w6632
4458 >= xabs
xabs = 4458
B
w6633
111453 >= 25*xabs
25*xabs = 111453
C
w6634
111461 >= 25*xabs
25*xabs = 111461
B

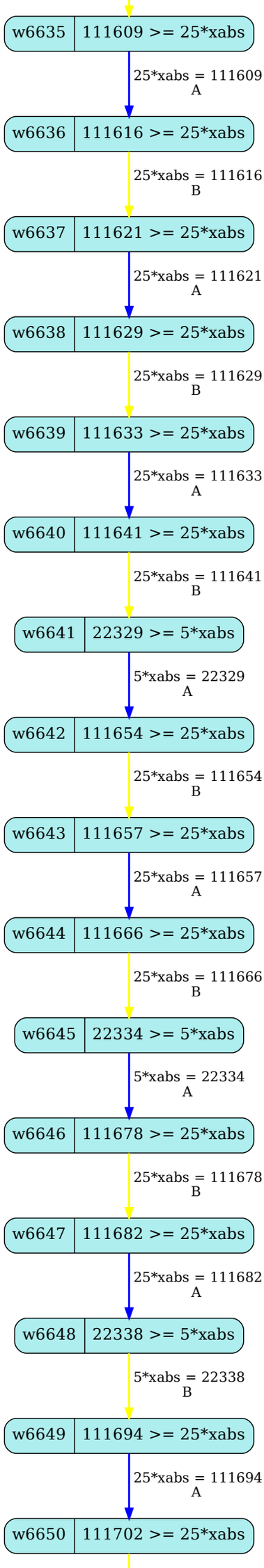
w6635
111609 >= 25*xabs
25*xabs = 111609
A
w6636
111616 >= 25*xabs
25*xabs = 111616
B
w6637
111621 >= 25*xabs
25*xabs = 111621
A
w6638
111629 >= 25*xabs
25*xabs = 111629
B
w6639
111633 >= 25*xabs
25*xabs = 111633
A
w6640
111641 >= 25*xabs
25*xabs = 111641
B
w6641
22329 >= 5*xabs
5*xabs = 22329
A
w6642
111654 >= 25*xabs
25*xabs = 111654
B
w6643
111657 >= 25*xabs
25*xabs = 111657
A
w6644
111666 >= 25*xabs
25*xabs = 111666
B
w6645
22334 >= 5*xabs
5*xabs = 22334
A
w6646
111678 >= 25*xabs
25*xabs = 111678
B
w6647
111682 >= 25*xabs
25*xabs = 111682
A
w6648
22338 >= 5*xabs
5*xabs = 22338
B
w6649
111694 >= 25*xabs
25*xabs = 111694
A
w6650
111702 >= 25*xabs

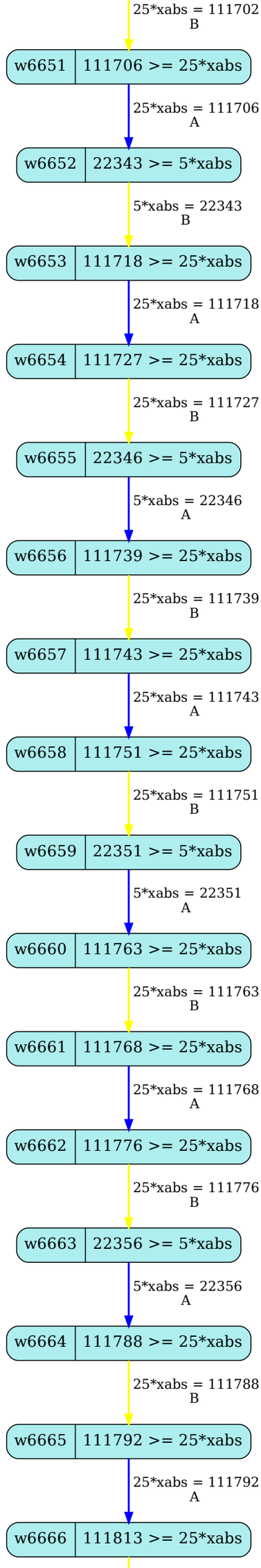
25*xabs = 111702
B
w6651
111706 >= 25*xabs
25*xabs = 111706
A
w6652
22343 >= 5*xabs
5*xabs = 22343
B
w6653
111718 >= 25*xabs
25*xabs = 111718
A
w6654
111727 >= 25*xabs
25*xabs = 111727
B
w6655
22346 >= 5*xabs
5*xabs = 22346
A
w6656
111739 >= 25*xabs
25*xabs = 111739
B
w6657
111743 >= 25*xabs
25*xabs = 111743
A
w6658
111751 >= 25*xabs
25*xabs = 111751
B
w6659
22351 >= 5*xabs
5*xabs = 22351
A
w6660
111763 >= 25*xabs
25*xabs = 111763
B
w6661
111768 >= 25*xabs
25*xabs = 111768
A
w6662
111776 >= 25*xabs
25*xabs = 111776
B
w6663
22356 >= 5*xabs
5*xabs = 22356
A
w6664
111788 >= 25*xabs
25*xabs = 111788
B
w6665
111792 >= 25*xabs
25*xabs = 111792
A
w6666
111813 >= 25*xabs

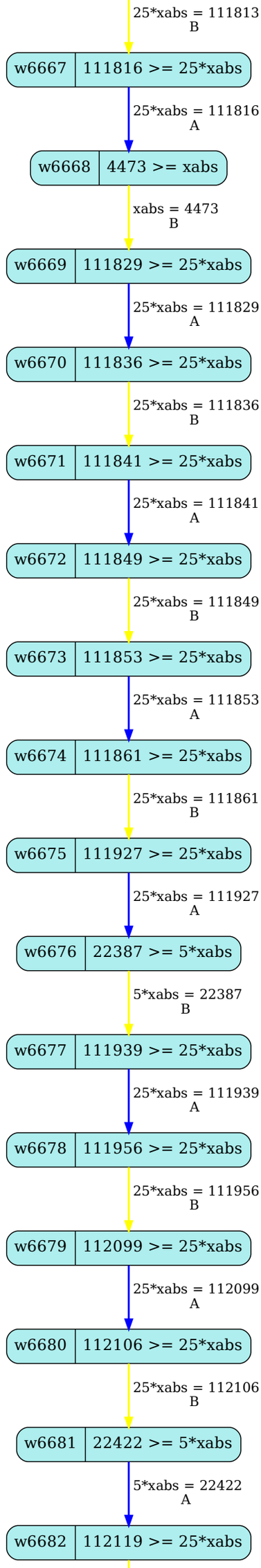
25*xabs = 111813
B
w6667
111816 >= 25*xabs
25*xabs = 111816
A
w6668
4473 >= xabs
xabs = 4473
B
w6669
111829 >= 25*xabs
25*xabs = 111829
A
w6670
111836 >= 25*xabs
25*xabs = 111836
B
w6671
111841 >= 25*xabs
25*xabs = 111841
A
w6672
111849 >= 25*xabs
25*xabs = 111849
B
w6673
111853 >= 25*xabs
25*xabs = 111853
A
w6674
111861 >= 25*xabs
25*xabs = 111861
B
w6675
111927 >= 25*xabs
25*xabs = 111927
A
w6676
22387 >= 5*xabs
5*xabs = 22387
B
w6677
111939 >= 25*xabs
25*xabs = 111939
A
w6678
111956 >= 25*xabs
25*xabs = 111956
B
w6679
112099 >= 25*xabs
25*xabs = 112099
A
w6680
112106 >= 25*xabs
25*xabs = 112106
B
w6681
22422 >= 5*xabs
5*xabs = 22422
A
w6682
112119 >= 25*xabs

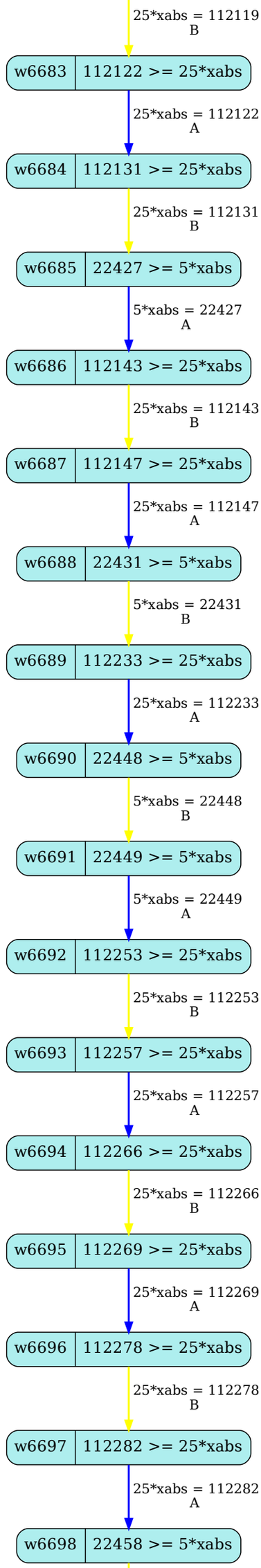
25*xabs = 112119
B
w6683
112122 >= 25*xabs
25*xabs = 112122
A
w6684
112131 >= 25*xabs
25*xabs = 112131
B
w6685
22427 >= 5*xabs
5*xabs = 22427
A
w6686
112143 >= 25*xabs
25*xabs = 112143
B
w6687
112147 >= 25*xabs
25*xabs = 112147
A
w6688
22431 >= 5*xabs
5*xabs = 22431
B
w6689
112233 >= 25*xabs
25*xabs = 112233
A
w6690
22448 >= 5*xabs
5*xabs = 22448
B
w6691
22449 >= 5*xabs
5*xabs = 22449
A
w6692
112253 >= 25*xabs
25*xabs = 112253
B
w6693
112257 >= 25*xabs
25*xabs = 112257
A
w6694
112266 >= 25*xabs
25*xabs = 112266
B
w6695
112269 >= 25*xabs
25*xabs = 112269
A
w6696
112278 >= 25*xabs
25*xabs = 112278
B
w6697
112282 >= 25*xabs
25*xabs = 112282
A
w6698
22458 >= 5*xabs

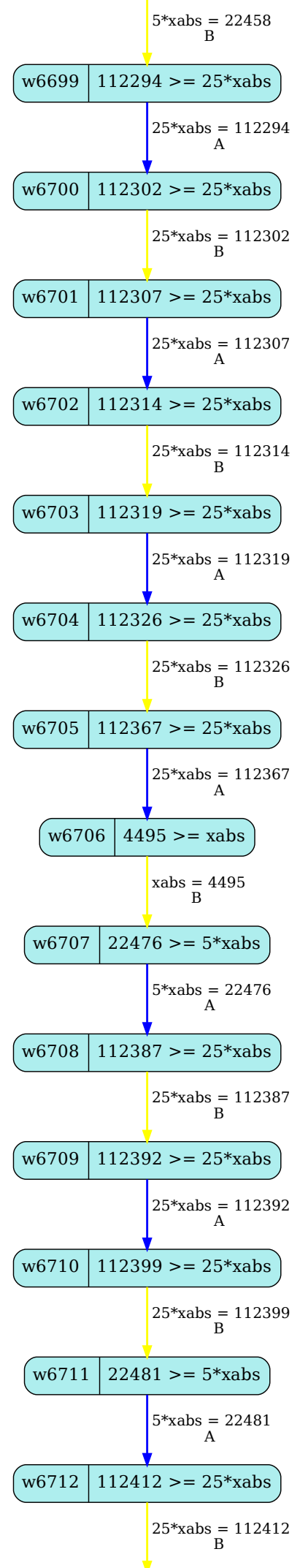
5*xabs = 22458
B
w6699
112294 >= 25*xabs
25*xabs = 112294
A
w6700
112302 >= 25*xabs
25*xabs = 112302
B
w6701
112307 >= 25*xabs
25*xabs = 112307
A
w6702
112314 >= 25*xabs
25*xabs = 112314
B
w6703
112319 >= 25*xabs
25*xabs = 112319
A
w6704
112326 >= 25*xabs
25*xabs = 112326
B
w6705
112367 >= 25*xabs
25*xabs = 112367
A
w6706
4495 >= xabs
xabs = 4495
B
w6707
22476 >= 5*xabs
5*xabs = 22476
A
w6708
112387 >= 25*xabs
25*xabs = 112387
B
w6709
112392 >= 25*xabs
25*xabs = 112392
A
w6710
112399 >= 25*xabs
25*xabs = 112399
B
w6711
22481 >= 5*xabs
5*xabs = 22481
A
w6712
112412 >= 25*xabs
25*xabs = 112412
B

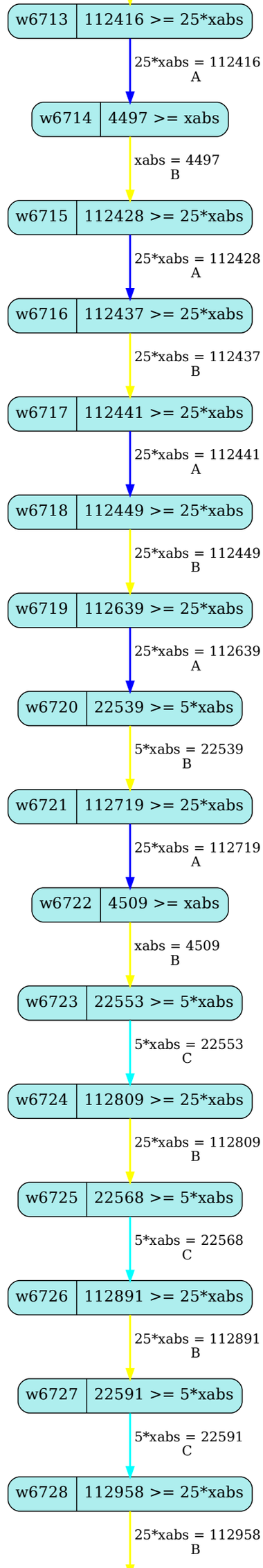
w6713
112416 >= 25*xabs
25*xabs = 112416
A
w6714
4497 >= xabs
xabs = 4497
B
w6715
112428 >= 25*xabs
25*xabs = 112428
A
w6716
112437 >= 25*xabs
25*xabs = 112437
B
w6717
112441 >= 25*xabs
25*xabs = 112441
A
w6718
112449 >= 25*xabs
25*xabs = 112449
B
w6719
112639 >= 25*xabs
25*xabs = 112639
A
w6720
22539 >= 5*xabs
5*xabs = 22539
B
w6721
112719 >= 25*xabs
25*xabs = 112719
A
w6722
4509 >= xabs
xabs = 4509
B
w6723
22553 >= 5*xabs
5*xabs = 22553
C
w6724
112809 >= 25*xabs
25*xabs = 112809
B
w6725
22568 >= 5*xabs
5*xabs = 22568
C
w6726
112891 >= 25*xabs
25*xabs = 112891
B
w6727
22591 >= 5*xabs
5*xabs = 22591
C
w6728
112958 >= 25*xabs
25*xabs = 112958
B

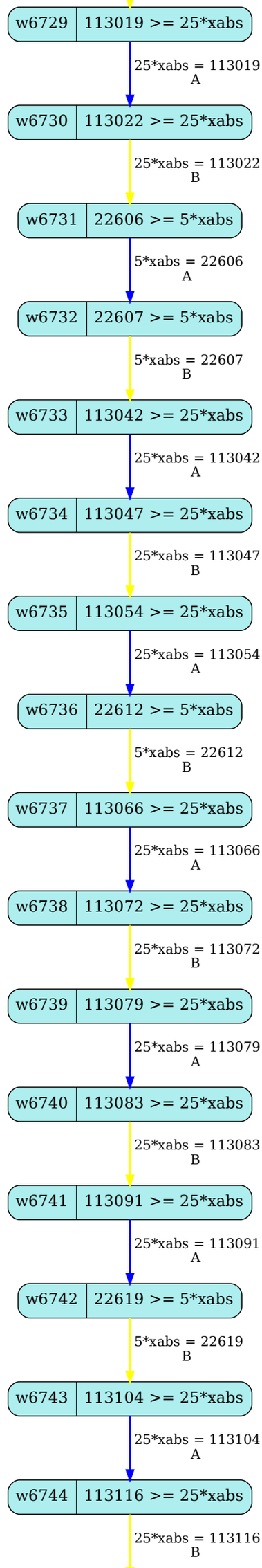
w6729
113019 >= 25*xabs
25*xabs = 113019
A
w6730
113022 >= 25*xabs
25*xabs = 113022
B
w6731
22606 >= 5*xabs
5*xabs = 22606
A
w6732
22607 >= 5*xabs
5*xabs = 22607
B
w6733
113042 >= 25*xabs
25*xabs = 113042
A
w6734
113047 >= 25*xabs
25*xabs = 113047
B
w6735
113054 >= 25*xabs
25*xabs = 113054
A
w6736
22612 >= 5*xabs
5*xabs = 22612
B
w6737
113066 >= 25*xabs
25*xabs = 113066
A
w6738
113072 >= 25*xabs
25*xabs = 113072
B
w6739
113079 >= 25*xabs
25*xabs = 113079
A
w6740
113083 >= 25*xabs
25*xabs = 113083
B
w6741
113091 >= 25*xabs
25*xabs = 113091
A
w6742
22619 >= 5*xabs
5*xabs = 22619
B
w6743
113104 >= 25*xabs
25*xabs = 113104
A
w6744
113116 >= 25*xabs
25*xabs = 113116
B

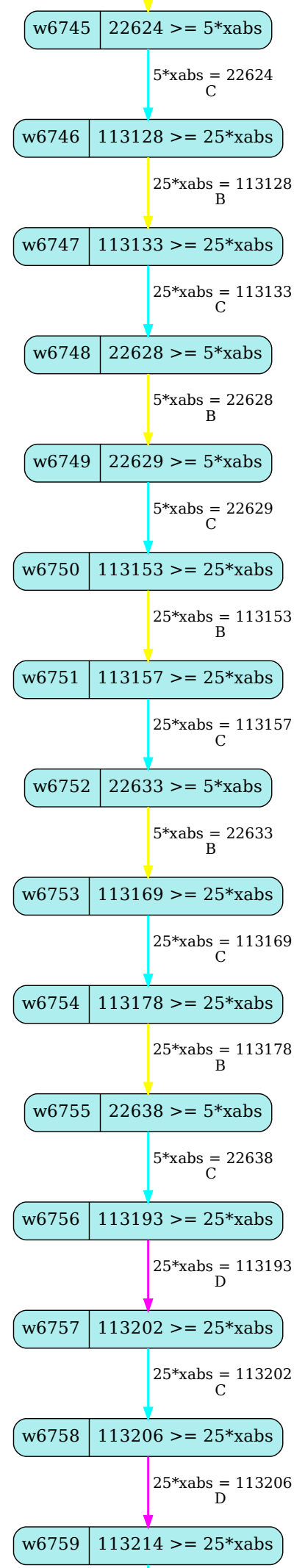
w6745
22624 >= 5*xabs
5*xabs = 22624
C
w6746
113128 >= 25*xabs
25*xabs = 113128
B
w6747
113133 >= 25*xabs
25*xabs = 113133
C
w6748
22628 >= 5*xabs
5*xabs = 22628
B
w6749
22629 >= 5*xabs
5*xabs = 22629
C
w6750
113153 >= 25*xabs
25*xabs = 113153
B
w6751
113157 >= 25*xabs
25*xabs = 113157
C
w6752
22633 >= 5*xabs
5*xabs = 22633
B
w6753
113169 >= 25*xabs
25*xabs = 113169
C
w6754
113178 >= 25*xabs
25*xabs = 113178
B
w6755
22638 >= 5*xabs
5*xabs = 22638
C
w6756
113193 >= 25*xabs
25*xabs = 113193
D
w6757
113202 >= 25*xabs
25*xabs = 113202
C
w6758
113206 >= 25*xabs
25*xabs = 113206
D
w6759
113214 >= 25*xabs

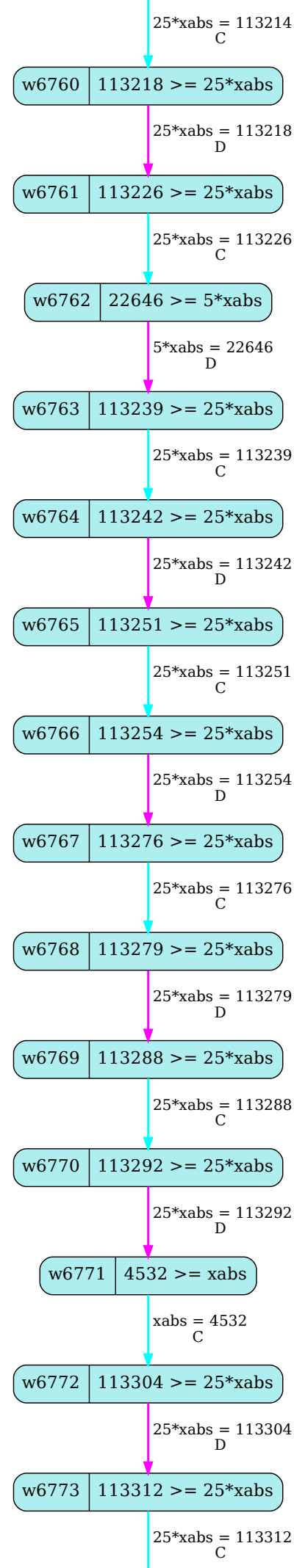
25*xabs = 113214
C
w6760
113218 >= 25*xabs
25*xabs = 113218
D
w6761
113226 >= 25*xabs
25*xabs = 113226
C
w6762
22646 >= 5*xabs
5*xabs = 22646
D
w6763
113239 >= 25*xabs
25*xabs = 113239
C
w6764
113242 >= 25*xabs
25*xabs = 113242
D
w6765
113251 >= 25*xabs
25*xabs = 113251
C
w6766
113254 >= 25*xabs
25*xabs = 113254
D
w6767
113276 >= 25*xabs
25*xabs = 113276
C
w6768
113279 >= 25*xabs
25*xabs = 113279
D
w6769
113288 >= 25*xabs
25*xabs = 113288
C
w6770
113292 >= 25*xabs
25*xabs = 113292
D
w6771
4532 >= xabs
xabs = 4532
C
w6772
113304 >= 25*xabs
25*xabs = 113304
D
w6773
113312 >= 25*xabs
25*xabs = 113312
C

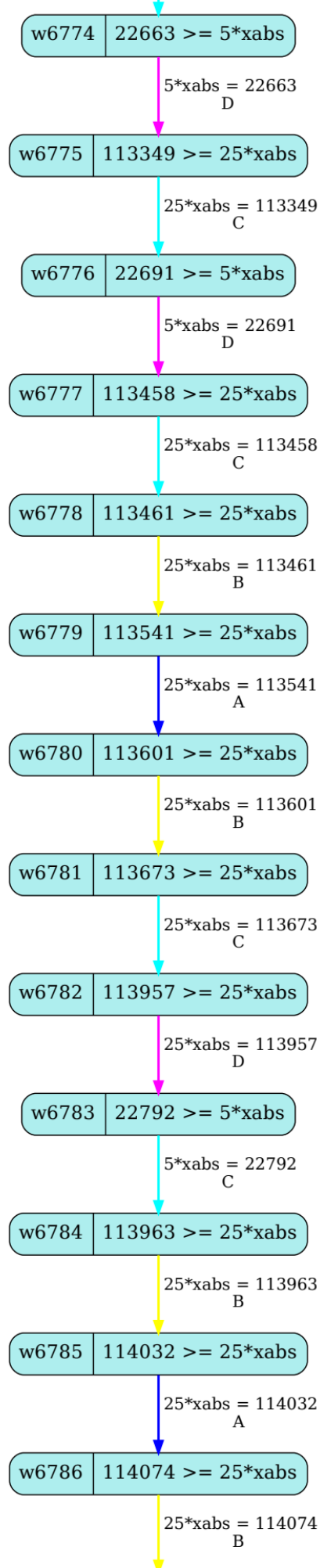
w6774
22663 >= 5*xabs
5*xabs = 22663
D
w6775
113349 >= 25*xabs
25*xabs = 113349
C
w6776
22691 >= 5*xabs
5*xabs = 22691
D
w6777
113458 >= 25*xabs
25*xabs = 113458
C
w6778
113461 >= 25*xabs
25*xabs = 113461
B
w6779
113541 >= 25*xabs
25*xabs = 113541
A
w6780
113601 >= 25*xabs
25*xabs = 113601
B
w6781
113673 >= 25*xabs
25*xabs = 113673
C
w6782
113957 >= 25*xabs
25*xabs = 113957
D
w6783
22792 >= 5*xabs
5*xabs = 22792
C
w6784
113963 >= 25*xabs
25*xabs = 113963
B
w6785
114032 >= 25*xabs
25*xabs = 114032
A
w6786
114074 >= 25*xabs
25*xabs = 114074
B

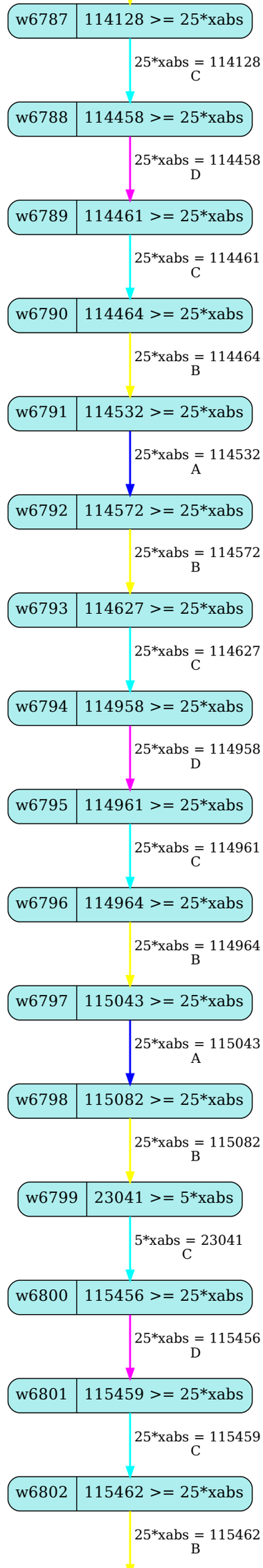
w6787
114128 >= 25*xabs
25*xabs = 114128
C
w6788
114458 >= 25*xabs
25*xabs = 114458
D
w6789
114461 >= 25*xabs
25*xabs = 114461
C
w6790
114464 >= 25*xabs
25*xabs = 114464
B
w6791
114532 >= 25*xabs
25*xabs = 114532
A
w6792
114572 >= 25*xabs
25*xabs = 114572
B
w6793
114627 >= 25*xabs
25*xabs = 114627
C
w6794
114958 >= 25*xabs
25*xabs = 114958
D
w6795
114961 >= 25*xabs
25*xabs = 114961
C
w6796
114964 >= 25*xabs
25*xabs = 114964
B
w6797
115043 >= 25*xabs
25*xabs = 115043
A
w6798
115082 >= 25*xabs
25*xabs = 115082
B
w6799
23041 >= 5*xabs
5*xabs = 23041
C
w6800
115456 >= 25*xabs
25*xabs = 115456
D
w6801
115459 >= 25*xabs
25*xabs = 115459
C
w6802
115462 >= 25*xabs
25*xabs = 115462
B

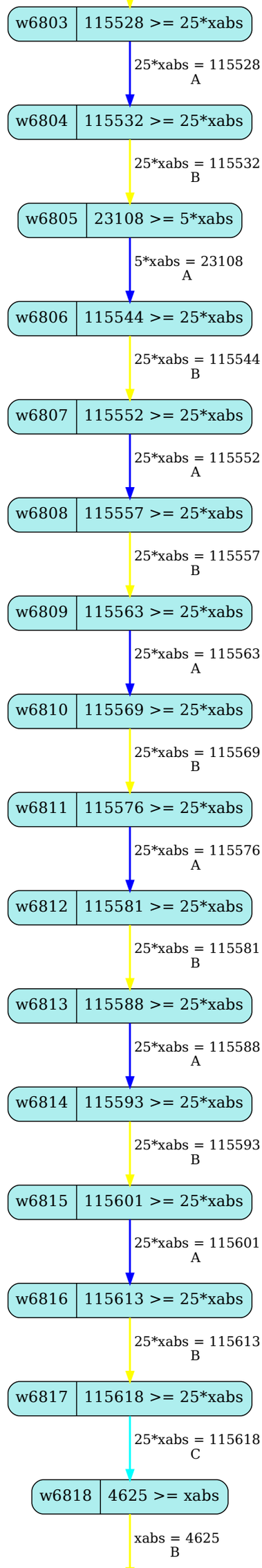
w6803
115528 >= 25*xabs
25*xabs = 115528
A
w6804
115532 >= 25*xabs
25*xabs = 115532
B
w6805
23108 >= 5*xabs
5*xabs = 23108
A
w6806
115544 >= 25*xabs
25*xabs = 115544
B
w6807
115552 >= 25*xabs
25*xabs = 115552
A
w6808
115557 >= 25*xabs
25*xabs = 115557
B
w6809
115563 >= 25*xabs
25*xabs = 115563
A
w6810
115569 >= 25*xabs
25*xabs = 115569
B
w6811
115576 >= 25*xabs
25*xabs = 115576
A
w6812
115581 >= 25*xabs
25*xabs = 115581
B
w6813
115588 >= 25*xabs
25*xabs = 115588
A
w6814
115593 >= 25*xabs
25*xabs = 115593
B
w6815
115601 >= 25*xabs
25*xabs = 115601
A
w6816
115613 >= 25*xabs
25*xabs = 115613
B
w6817
115618 >= 25*xabs
25*xabs = 115618
C
w6818
4625 >= xabs
xabs = 4625
B

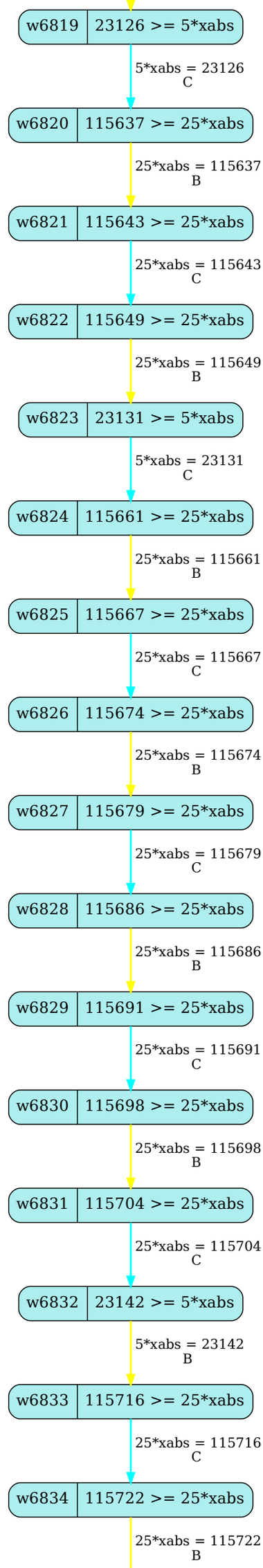
w6819
23126 >= 5*xabs
5*xabs = 23126
C
w6820
115637 >= 25*xabs
25*xabs = 115637
B
w6821
115643 >= 25*xabs
25*xabs = 115643
C
w6822
115649 >= 25*xabs
25*xabs = 115649
B
w6823
23131 >= 5*xabs
5*xabs = 23131
C
w6824
115661 >= 25*xabs
25*xabs = 115661
B
w6825
115667 >= 25*xabs
25*xabs = 115667
C
w6826
115674 >= 25*xabs
25*xabs = 115674
B
w6827
115679 >= 25*xabs
25*xabs = 115679
C
w6828
115686 >= 25*xabs
25*xabs = 115686
B
w6829
115691 >= 25*xabs
25*xabs = 115691
C
w6830
115698 >= 25*xabs
25*xabs = 115698
B
w6831
115704 >= 25*xabs
25*xabs = 115704
C
w6832
23142 >= 5*xabs
5*xabs = 23142
B
w6833
115716 >= 25*xabs
25*xabs = 115716
C
w6834
115722 >= 25*xabs
25*xabs = 115722
B

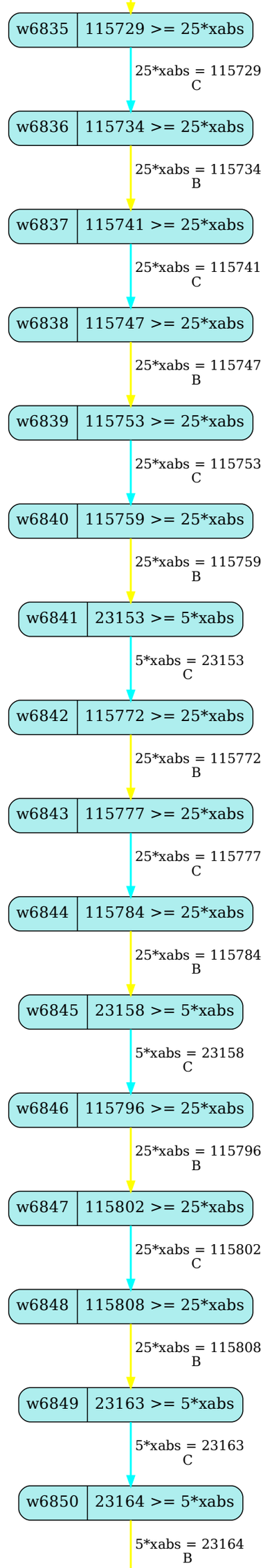
w6835
115729 >= 25*xabs
25*xabs = 115729
C
w6836
115734 >= 25*xabs
25*xabs = 115734
B
w6837
115741 >= 25*xabs
25*xabs = 115741
C
w6838
115747 >= 25*xabs
25*xabs = 115747
B
w6839
115753 >= 25*xabs
25*xabs = 115753
C
w6840
115759 >= 25*xabs
25*xabs = 115759
B
w6841
23153 >= 5*xabs
5*xabs = 23153
C
w6842
115772 >= 25*xabs
25*xabs = 115772
B
w6843
115777 >= 25*xabs
25*xabs = 115777
C
w6844
115784 >= 25*xabs
25*xabs = 115784
B
w6845
23158 >= 5*xabs
5*xabs = 23158
C
w6846
115796 >= 25*xabs
25*xabs = 115796
B
w6847
115802 >= 25*xabs
25*xabs = 115802
C
w6848
115808 >= 25*xabs
25*xabs = 115808
B
w6849
23163 >= 5*xabs
5*xabs = 23163
C
w6850
23164 >= 5*xabs
5*xabs = 23164
B

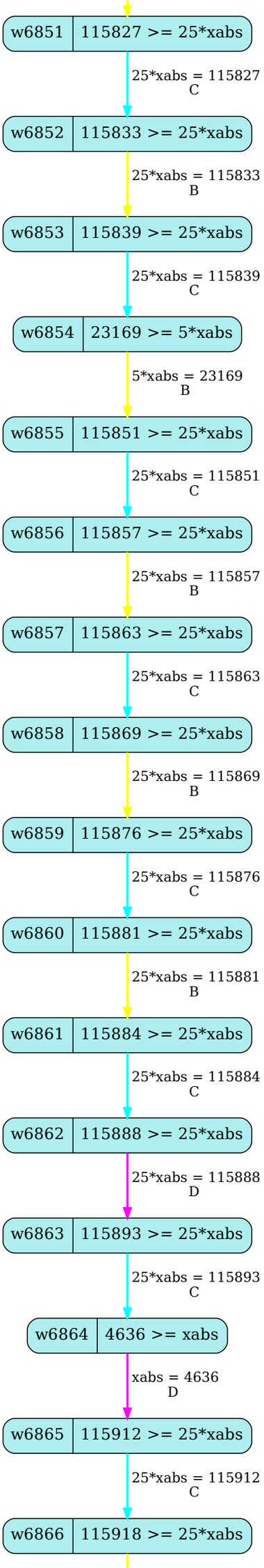
w6851
115827 >= 25*xabs
25*xabs = 115827
C
w6852
115833 >= 25*xabs
25*xabs = 115833
B
w6853
115839 >= 25*xabs
25*xabs = 115839
C
w6854
23169 >= 5*xabs
5*xabs = 23169
B
w6855
115851 >= 25*xabs
25*xabs = 115851
C
w6856
115857 >= 25*xabs
25*xabs = 115857
B
w6857
115863 >= 25*xabs
25*xabs = 115863
C
w6858
115869 >= 25*xabs
25*xabs = 115869
B
w6859
115876 >= 25*xabs
25*xabs = 115876
C
w6860
115881 >= 25*xabs
25*xabs = 115881
B
w6861
115884 >= 25*xabs
25*xabs = 115884
C
w6862
115888 >= 25*xabs
25*xabs = 115888
D
w6863
115893 >= 25*xabs
25*xabs = 115893
C
w6864
4636 >= xabs
xabs = 4636
D
w6865
115912 >= 25*xabs
25*xabs = 115912
C
w6866
115918 >= 25*xabs

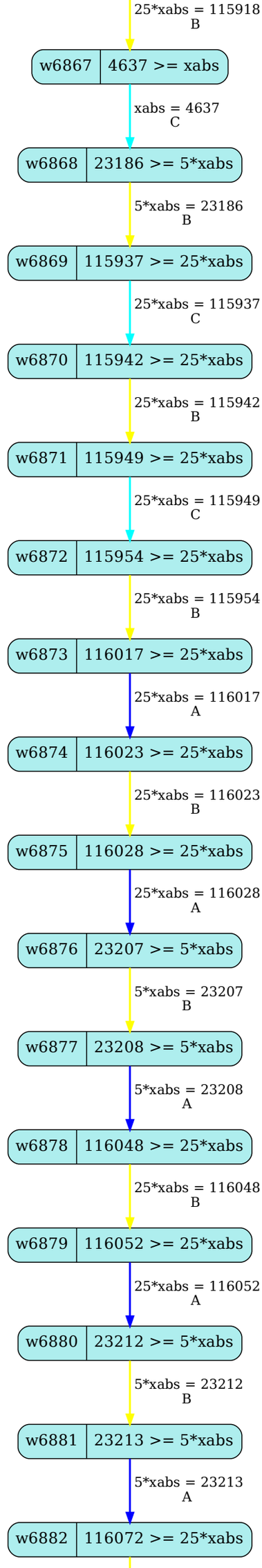
25*xabs = 115918
B
w6867
4637 >= xabs
xabs = 4637
C
w6868
23186 >= 5*xabs
5*xabs = 23186
B
w6869
115937 >= 25*xabs
25*xabs = 115937
C
w6870
115942 >= 25*xabs
25*xabs = 115942
B
w6871
115949 >= 25*xabs
25*xabs = 115949
C
w6872
115954 >= 25*xabs
25*xabs = 115954
B
w6873
116017 >= 25*xabs
25*xabs = 116017
A
w6874
116023 >= 25*xabs
25*xabs = 116023
B
w6875
116028 >= 25*xabs
25*xabs = 116028
A
w6876
23207 >= 5*xabs
5*xabs = 23207
B
w6877
23208 >= 5*xabs
5*xabs = 23208
A
w6878
116048 >= 25*xabs
25*xabs = 116048
B
w6879
116052 >= 25*xabs
25*xabs = 116052
A
w6880
23212 >= 5*xabs
5*xabs = 23212
B
w6881
23213 >= 5*xabs
5*xabs = 23213
A
w6882
116072 >= 25*xabs

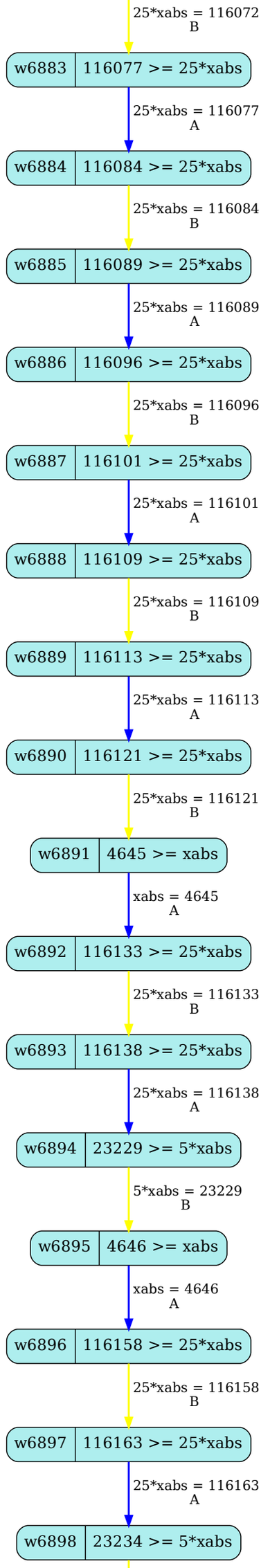
25*xabs = 116072
B
w6883
116077 >= 25*xabs
25*xabs = 116077
A
w6884
116084 >= 25*xabs
25*xabs = 116084
B
w6885
116089 >= 25*xabs
25*xabs = 116089
A
w6886
116096 >= 25*xabs
25*xabs = 116096
B
w6887
116101 >= 25*xabs
25*xabs = 116101
A
w6888
116109 >= 25*xabs
25*xabs = 116109
B
w6889
116113 >= 25*xabs
25*xabs = 116113
A
w6890
116121 >= 25*xabs
25*xabs = 116121
B
w6891
4645 >= xabs
xabs = 4645
A
w6892
116133 >= 25*xabs
25*xabs = 116133
B
w6893
116138 >= 25*xabs
25*xabs = 116138
A
w6894
23229 >= 5*xabs
5*xabs = 23229
B
w6895
4646 >= xabs
xabs = 4646
A
w6896
116158 >= 25*xabs
25*xabs = 116158
B
w6897
116163 >= 25*xabs
25*xabs = 116163
A
w6898
23234 >= 5*xabs

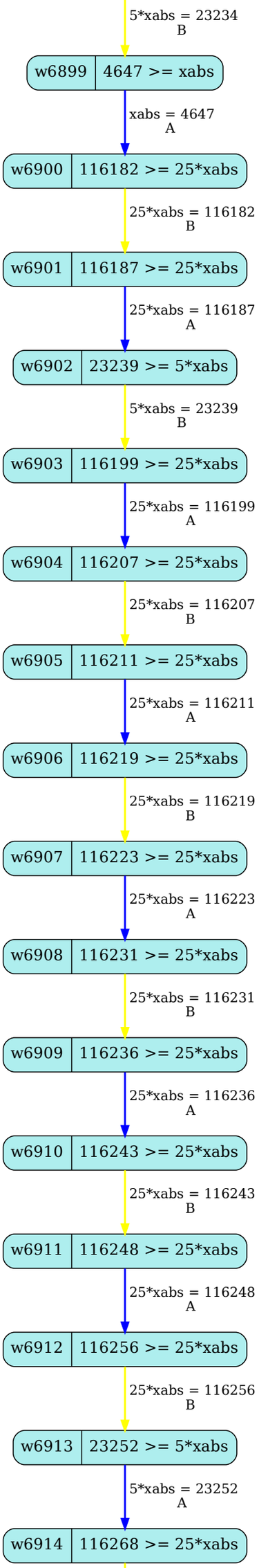
5*xabs = 23234
B
w6899
4647 >= xabs
xabs = 4647
A
w6900
116182 >= 25*xabs
25*xabs = 116182
B
w6901
116187 >= 25*xabs
25*xabs = 116187
A
w6902
23239 >= 5*xabs
5*xabs = 23239
B
w6903
116199 >= 25*xabs
25*xabs = 116199
A
w6904
116207 >= 25*xabs
25*xabs = 116207
B
w6905
116211 >= 25*xabs
25*xabs = 116211
A
w6906
116219 >= 25*xabs
25*xabs = 116219
B
w6907
116223 >= 25*xabs
25*xabs = 116223
A
w6908
116231 >= 25*xabs
25*xabs = 116231
B
w6909
116236 >= 25*xabs
25*xabs = 116236
A
w6910
116243 >= 25*xabs
25*xabs = 116243
B
w6911
116248 >= 25*xabs
25*xabs = 116248
A
w6912
116256 >= 25*xabs
25*xabs = 116256
B
w6913
23252 >= 5*xabs
5*xabs = 23252
A
w6914
116268 >= 25*xabs

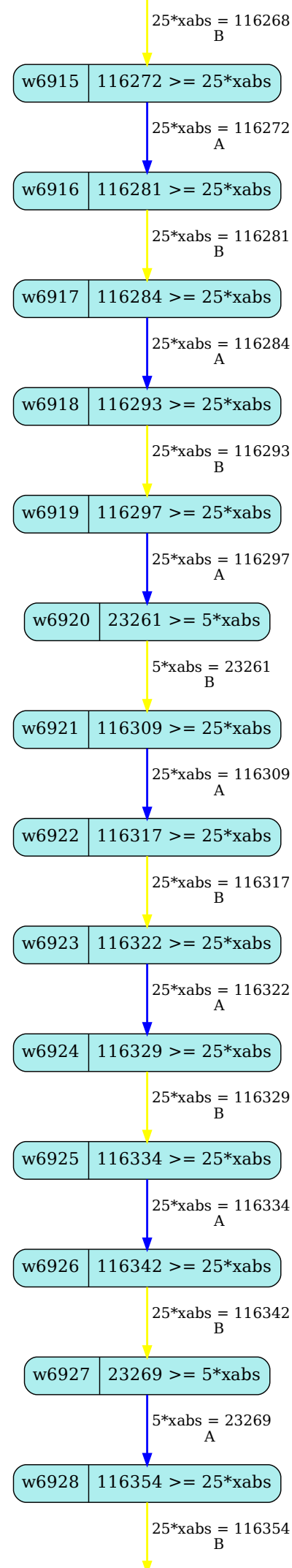
25*xabs = 116268
B
w6915
116272 >= 25*xabs
25*xabs = 116272
A
w6916
116281 >= 25*xabs
25*xabs = 116281
B
w6917
116284 >= 25*xabs
25*xabs = 116284
A
w6918
116293 >= 25*xabs
25*xabs = 116293
B
w6919
116297 >= 25*xabs
25*xabs = 116297
A
w6920
23261 >= 5*xabs
5*xabs = 23261
B
w6921
116309 >= 25*xabs
25*xabs = 116309
A
w6922
116317 >= 25*xabs
25*xabs = 116317
B
w6923
116322 >= 25*xabs
25*xabs = 116322
A
w6924
116329 >= 25*xabs
25*xabs = 116329
B
w6925
116334 >= 25*xabs
25*xabs = 116334
A
w6926
116342 >= 25*xabs
25*xabs = 116342
B
w6927
23269 >= 5*xabs
5*xabs = 23269
A
w6928
116354 >= 25*xabs
25*xabs = 116354
B

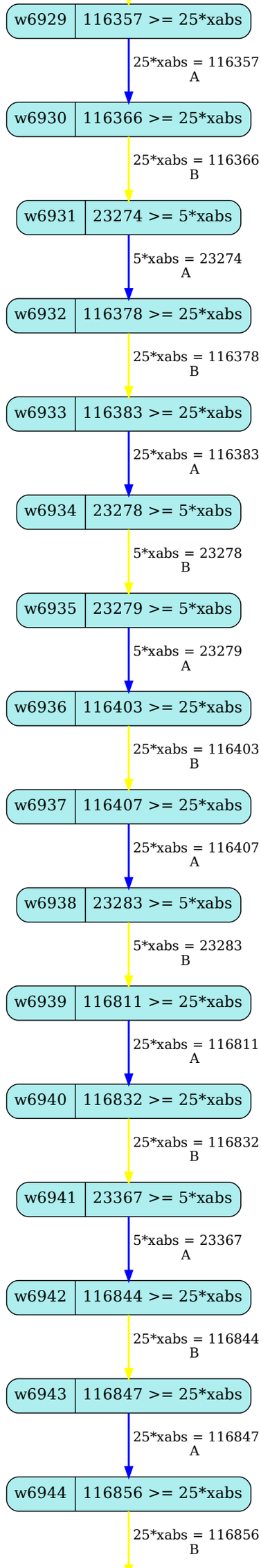
w6929
116357 >= 25*xabs
25*xabs = 116357
A
w6930
116366 >= 25*xabs
25*xabs = 116366
B
w6931
23274 >= 5*xabs
5*xabs = 23274
A
w6932
116378 >= 25*xabs
25*xabs = 116378
B
w6933
116383 >= 25*xabs
25*xabs = 116383
A
w6934
23278 >= 5*xabs
5*xabs = 23278
B
w6935
23279 >= 5*xabs
5*xabs = 23279
A
w6936
116403 >= 25*xabs
25*xabs = 116403
B
w6937
116407 >= 25*xabs
25*xabs = 116407
A
w6938
23283 >= 5*xabs
5*xabs = 23283
B
w6939
116811 >= 25*xabs
25*xabs = 116811
A
w6940
116832 >= 25*xabs
25*xabs = 116832
B
w6941
23367 >= 5*xabs
5*xabs = 23367
A
w6942
116844 >= 25*xabs
25*xabs = 116844
B
w6943
116847 >= 25*xabs
25*xabs = 116847
A
w6944
116856 >= 25*xabs
25*xabs = 116856
B

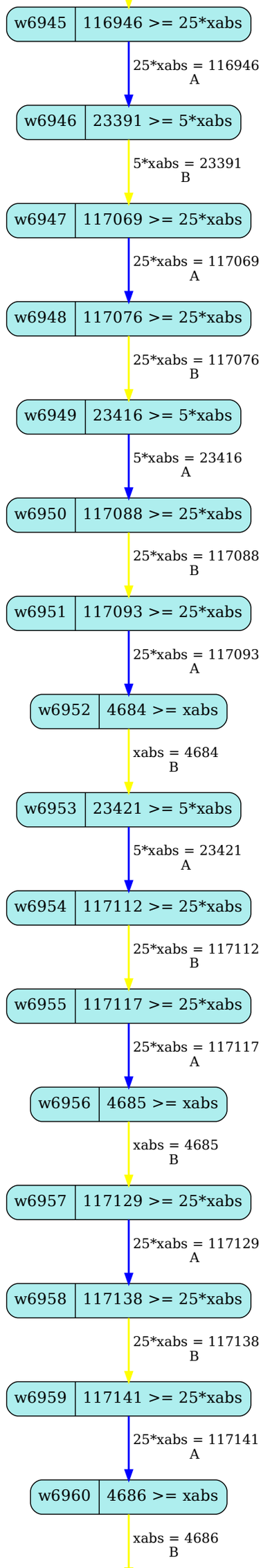
w6945
116946 >= 25*xabs
25*xabs = 116946
A
w6946
23391 >= 5*xabs
5*xabs = 23391
B
w6947
117069 >= 25*xabs
25*xabs = 117069
A
w6948
117076 >= 25*xabs
25*xabs = 117076
B
w6949
23416 >= 5*xabs
5*xabs = 23416
A
w6950
117088 >= 25*xabs
25*xabs = 117088
B
w6951
117093 >= 25*xabs
25*xabs = 117093
A
w6952
4684 >= xabs
xabs = 4684
B
w6953
23421 >= 5*xabs
5*xabs = 23421
A
w6954
117112 >= 25*xabs
25*xabs = 117112
B
w6955
117117 >= 25*xabs
25*xabs = 117117
A
w6956
4685 >= xabs
xabs = 4685
B
w6957
117129 >= 25*xabs
25*xabs = 117129
A
w6958
117138 >= 25*xabs
25*xabs = 117138
B
w6959
117141 >= 25*xabs
25*xabs = 117141
A
w6960
4686 >= xabs
xabs = 4686
B

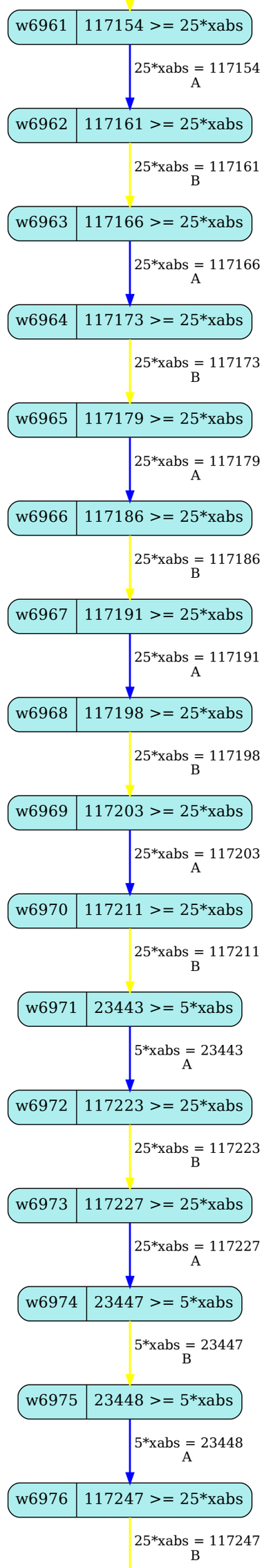
w6961
117154 >= 25*xabs
25*xabs = 117154
A
w6962
117161 >= 25*xabs
25*xabs = 117161
B
w6963
117166 >= 25*xabs
25*xabs = 117166
A
w6964
117173 >= 25*xabs
25*xabs = 117173
B
w6965
117179 >= 25*xabs
25*xabs = 117179
A
w6966
117186 >= 25*xabs
25*xabs = 117186
B
w6967
117191 >= 25*xabs
25*xabs = 117191
A
w6968
117198 >= 25*xabs
25*xabs = 117198
B
w6969
117203 >= 25*xabs
25*xabs = 117203
A
w6970
117211 >= 25*xabs
25*xabs = 117211
B
w6971
23443 >= 5*xabs
5*xabs = 23443
A
w6972
117223 >= 25*xabs
25*xabs = 117223
B
w6973
117227 >= 25*xabs
25*xabs = 117227
A
w6974
23447 >= 5*xabs
5*xabs = 23447
B
w6975
23448 >= 5*xabs
5*xabs = 23448
A
w6976
117247 >= 25*xabs
25*xabs = 117247
B

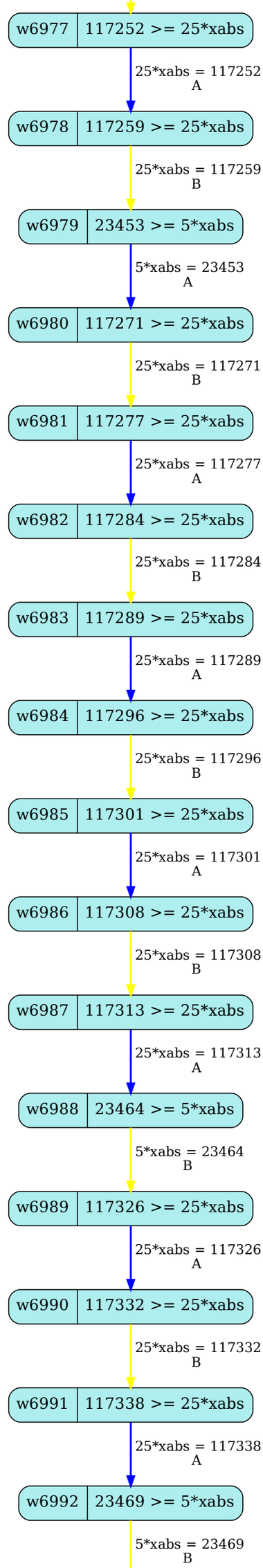
w6977
117252 >= 25*xabs
25*xabs = 117252
A
w6978
117259 >= 25*xabs
25*xabs = 117259
B
w6979
23453 >= 5*xabs
5*xabs = 23453
A
w6980
117271 >= 25*xabs
25*xabs = 117271
B
w6981
117277 >= 25*xabs
25*xabs = 117277
A
w6982
117284 >= 25*xabs
25*xabs = 117284
B
w6983
117289 >= 25*xabs
25*xabs = 117289
A
w6984
117296 >= 25*xabs
25*xabs = 117296
B
w6985
117301 >= 25*xabs
25*xabs = 117301
A
w6986
117308 >= 25*xabs
25*xabs = 117308
B
w6987
117313 >= 25*xabs
25*xabs = 117313
A
w6988
23464 >= 5*xabs
5*xabs = 23464
B
w6989
117326 >= 25*xabs
25*xabs = 117326
A
w6990
117332 >= 25*xabs
25*xabs = 117332
B
w6991
117338 >= 25*xabs
25*xabs = 117338
A
w6992
23469 >= 5*xabs
5*xabs = 23469
B

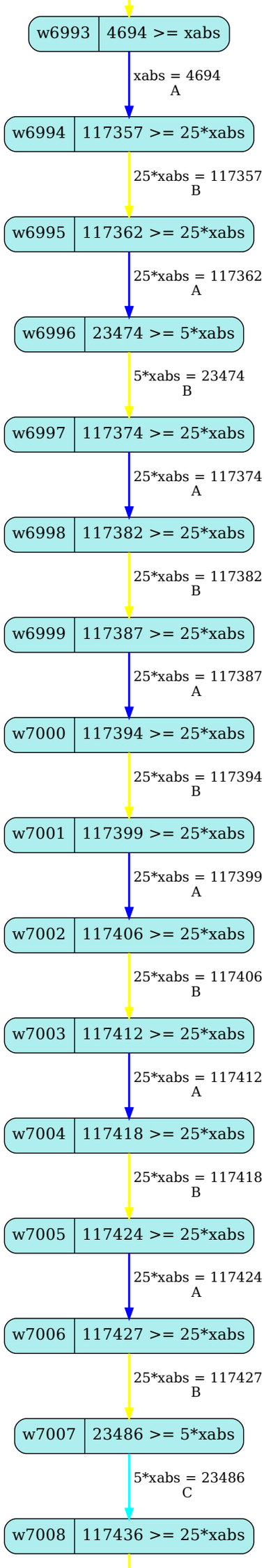
w6993
4694 >= xabs
xabs = 4694
A
w6994
117357 >= 25*xabs
25*xabs = 117357
B
w6995
117362 >= 25*xabs
25*xabs = 117362
A
w6996
23474 >= 5*xabs
5*xabs = 23474
B
w6997
117374 >= 25*xabs
25*xabs = 117374
A
w6998
117382 >= 25*xabs
25*xabs = 117382
B
w6999
117387 >= 25*xabs
25*xabs = 117387
A
w7000
117394 >= 25*xabs
25*xabs = 117394
B
w7001
117399 >= 25*xabs
25*xabs = 117399
A
w7002
117406 >= 25*xabs
25*xabs = 117406
B
w7003
117412 >= 25*xabs
25*xabs = 117412
A
w7004
117418 >= 25*xabs
25*xabs = 117418
B
w7005
117424 >= 25*xabs
25*xabs = 117424
A
w7006
117427 >= 25*xabs
25*xabs = 117427
B
w7007
23486 >= 5*xabs
5*xabs = 23486
C
w7008
117436 >= 25*xabs

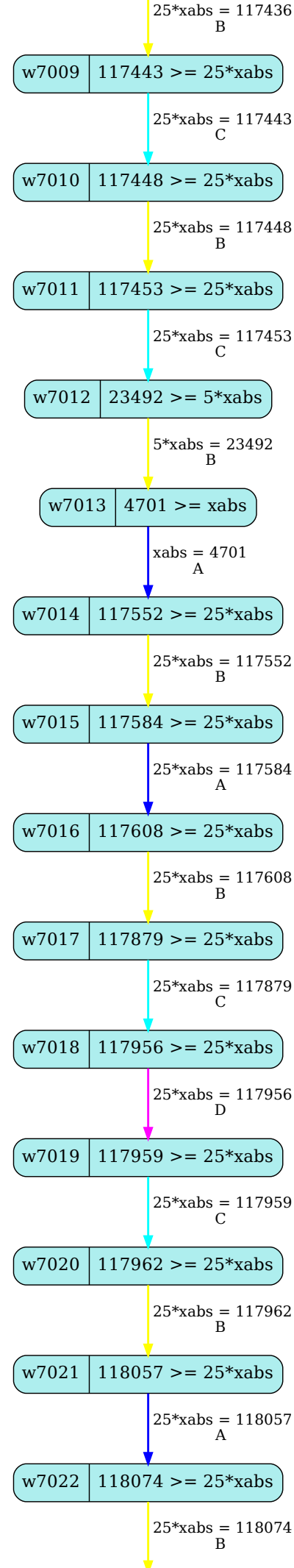
25*xabs = 117436
B
w7009
117443 >= 25*xabs
25*xabs = 117443
C
w7010
117448 >= 25*xabs
25*xabs = 117448
B
w7011
117453 >= 25*xabs
25*xabs = 117453
C
w7012
23492 >= 5*xabs
5*xabs = 23492
B
w7013
4701 >= xabs
xabs = 4701
A
w7014
117552 >= 25*xabs
25*xabs = 117552
B
w7015
117584 >= 25*xabs
25*xabs = 117584
A
w7016
117608 >= 25*xabs
25*xabs = 117608
B
w7017
117879 >= 25*xabs
25*xabs = 117879
C
w7018
117956 >= 25*xabs
25*xabs = 117956
D
w7019
117959 >= 25*xabs
25*xabs = 117959
C
w7020
117962 >= 25*xabs
25*xabs = 117962
B
w7021
118057 >= 25*xabs
25*xabs = 118057
A
w7022
118074 >= 25*xabs
25*xabs = 118074
B

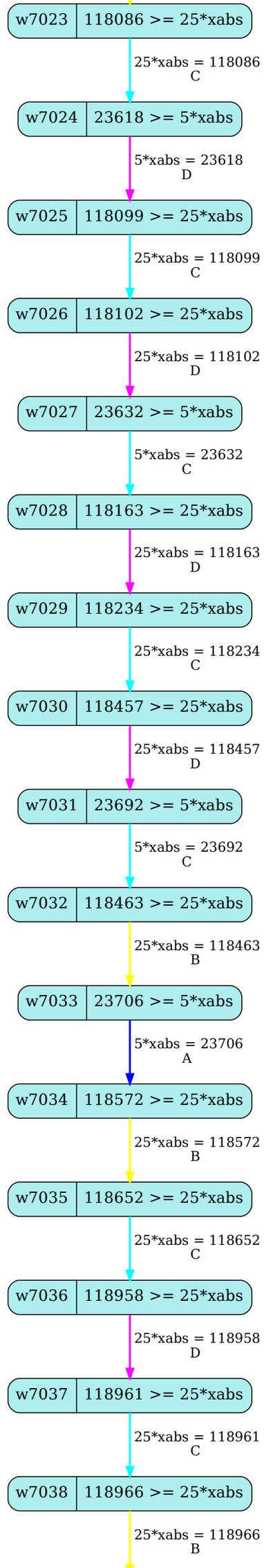
w7023
118086 >= 25*xabs
25*xabs = 118086
C
w7024
23618 >= 5*xabs
5*xabs = 23618
D
w7025
118099 >= 25*xabs
25*xabs = 118099
C
w7026
118102 >= 25*xabs
25*xabs = 118102
D
w7027
23632 >= 5*xabs
5*xabs = 23632
C
w7028
118163 >= 25*xabs
25*xabs = 118163
D
w7029
118234 >= 25*xabs
25*xabs = 118234
C
w7030
118457 >= 25*xabs
25*xabs = 118457
D
w7031
23692 >= 5*xabs
5*xabs = 23692
C
w7032
118463 >= 25*xabs
25*xabs = 118463
B
w7033
23706 >= 5*xabs
5*xabs = 23706
A
w7034
118572 >= 25*xabs
25*xabs = 118572
B
w7035
118652 >= 25*xabs
25*xabs = 118652
C
w7036
118958 >= 25*xabs
25*xabs = 118958
D
w7037
118961 >= 25*xabs
25*xabs = 118961
C
w7038
118966 >= 25*xabs
25*xabs = 118966
B

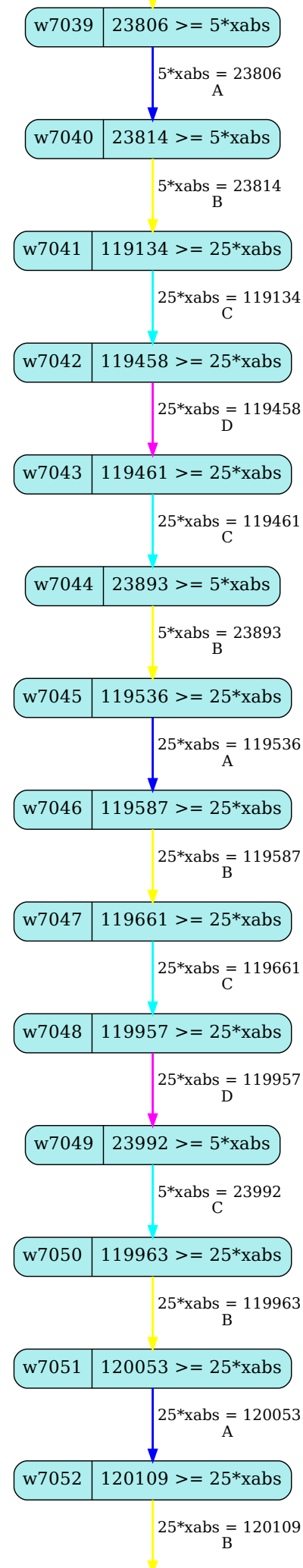
w7039
23806 >= 5*xabs
5*xabs = 23806
A
w7040
23814 >= 5*xabs
5*xabs = 23814
B
w7041
119134 >= 25*xabs
25*xabs = 119134
C
w7042
119458 >= 25*xabs
25*xabs = 119458
D
w7043
119461 >= 25*xabs
25*xabs = 119461
C
w7044
23893 >= 5*xabs
5*xabs = 23893
B
w7045
119536 >= 25*xabs
25*xabs = 119536
A
w7046
119587 >= 25*xabs
25*xabs = 119587
B
w7047
119661 >= 25*xabs
25*xabs = 119661
C
w7048
119957 >= 25*xabs
25*xabs = 119957
D
w7049
23992 >= 5*xabs
5*xabs = 23992
C
w7050
119963 >= 25*xabs
25*xabs = 119963
B
w7051
120053 >= 25*xabs
25*xabs = 120053
A
w7052
120109 >= 25*xabs
25*xabs = 120109
B

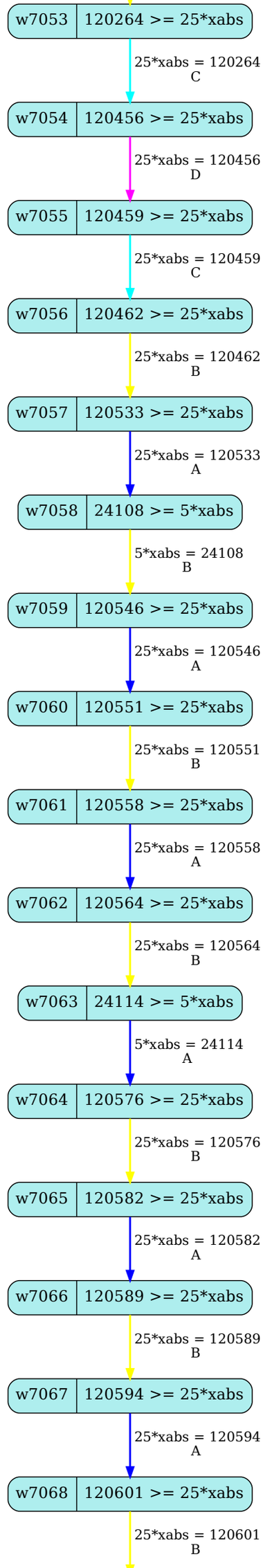
w7053
120264 >= 25*xabs
25*xabs = 120264
C
w7054
120456 >= 25*xabs
25*xabs = 120456
D
w7055
120459 >= 25*xabs
25*xabs = 120459
C
w7056
120462 >= 25*xabs
25*xabs = 120462
B
w7057
120533 >= 25*xabs
25*xabs = 120533
A
w7058
24108 >= 5*xabs
5*xabs = 24108
B
w7059
120546 >= 25*xabs
25*xabs = 120546
A
w7060
120551 >= 25*xabs
25*xabs = 120551
B
w7061
120558 >= 25*xabs
25*xabs = 120558
A
w7062
120564 >= 25*xabs
25*xabs = 120564
B
w7063
24114 >= 5*xabs
5*xabs = 24114
A
w7064
120576 >= 25*xabs
25*xabs = 120576
B
w7065
120582 >= 25*xabs
25*xabs = 120582
A
w7066
120589 >= 25*xabs
25*xabs = 120589
B
w7067
120594 >= 25*xabs
25*xabs = 120594
A
w7068
120601 >= 25*xabs
25*xabs = 120601
B

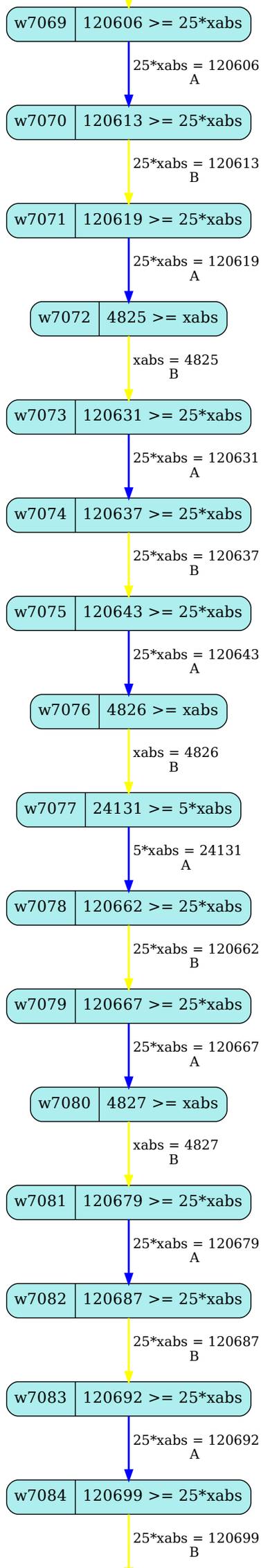
w7069
120606 >= 25*xabs
25*xabs = 120606
A
w7070
120613 >= 25*xabs
25*xabs = 120613
B
w7071
120619 >= 25*xabs
25*xabs = 120619
A
w7072
4825 >= xabs
xabs = 4825
B
w7073
120631 >= 25*xabs
25*xabs = 120631
A
w7074
120637 >= 25*xabs
25*xabs = 120637
B
w7075
120643 >= 25*xabs
25*xabs = 120643
A
w7076
4826 >= xabs
xabs = 4826
B
w7077
24131 >= 5*xabs
5*xabs = 24131
A
w7078
120662 >= 25*xabs
25*xabs = 120662
B
w7079
120667 >= 25*xabs
25*xabs = 120667
A
w7080
4827 >= xabs
xabs = 4827
B
w7081
120679 >= 25*xabs
25*xabs = 120679
A
w7082
120687 >= 25*xabs
25*xabs = 120687
B
w7083
120692 >= 25*xabs
25*xabs = 120692
A
w7084
120699 >= 25*xabs
25*xabs = 120699
B

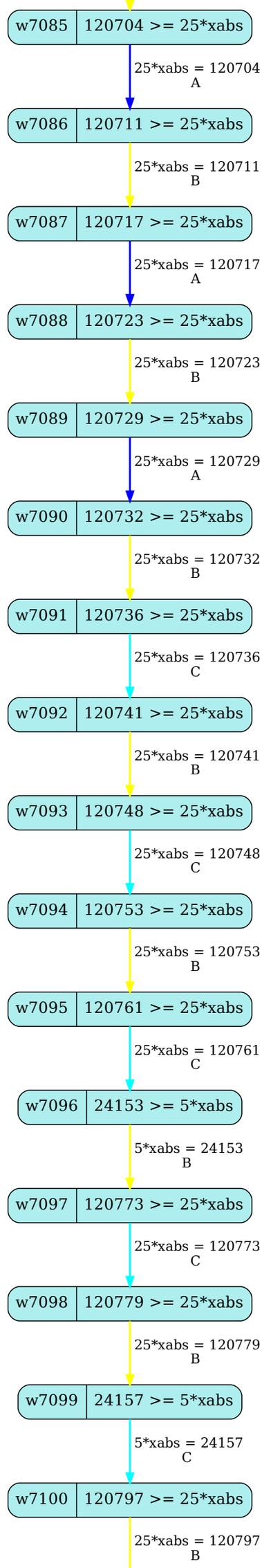
w7085
120704 >= 25*xabs
25*xabs = 120704
A
w7086
120711 >= 25*xabs
25*xabs = 120711
B
w7087
120717 >= 25*xabs
25*xabs = 120717
A
w7088
120723 >= 25*xabs
25*xabs = 120723
B
w7089
120729 >= 25*xabs
25*xabs = 120729
A
w7090
120732 >= 25*xabs
25*xabs = 120732
B
w7091
120736 >= 25*xabs
25*xabs = 120736
C
w7092
120741 >= 25*xabs
25*xabs = 120741
B
w7093
120748 >= 25*xabs
25*xabs = 120748
C
w7094
120753 >= 25*xabs
25*xabs = 120753
B
w7095
120761 >= 25*xabs
25*xabs = 120761
C
w7096
24153 >= 5*xabs
5*xabs = 24153
B
w7097
120773 >= 25*xabs
25*xabs = 120773
C
w7098
120779 >= 25*xabs
25*xabs = 120779
B
w7099
24157 >= 5*xabs
5*xabs = 24157
C
w7100
120797 >= 25*xabs
25*xabs = 120797
B

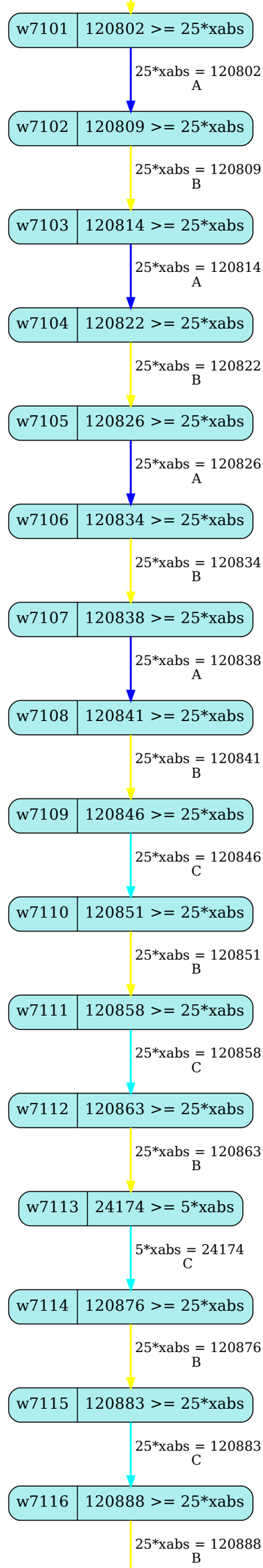
w7101
120802 >= 25*xabs
25*xabs = 120802
A
w7102
120809 >= 25*xabs
25*xabs = 120809
B
w7103
120814 >= 25*xabs
25*xabs = 120814
A
w7104
120822 >= 25*xabs
25*xabs = 120822
B
w7105
120826 >= 25*xabs
25*xabs = 120826
A
w7106
120834 >= 25*xabs
25*xabs = 120834
B
w7107
120838 >= 25*xabs
25*xabs = 120838
A
w7108
120841 >= 25*xabs
25*xabs = 120841
B
w7109
120846 >= 25*xabs
25*xabs = 120846
C
w7110
120851 >= 25*xabs
25*xabs = 120851
B
w7111
120858 >= 25*xabs
25*xabs = 120858
C
w7112
120863 >= 25*xabs
25*xabs = 120863
B
w7113
24174 >= 5*xabs
5*xabs = 24174
C
w7114
120876 >= 25*xabs
25*xabs = 120876
B
w7115
120883 >= 25*xabs
25*xabs = 120883
C
w7116
120888 >= 25*xabs
25*xabs = 120888
B

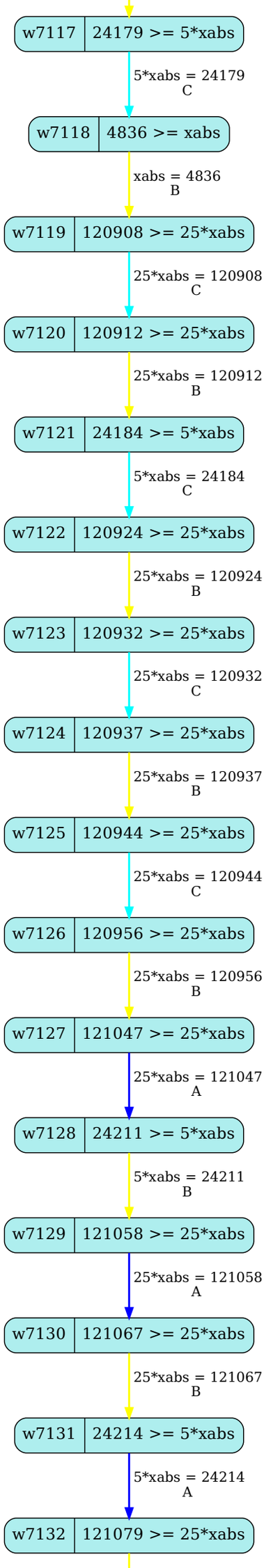
w7117
24179 >= 5*xabs
5*xabs = 24179
C
w7118
4836 >= xabs
xabs = 4836
B
w7119
120908 >= 25*xabs
25*xabs = 120908
C
w7120
120912 >= 25*xabs
25*xabs = 120912
B
w7121
24184 >= 5*xabs
5*xabs = 24184
C
w7122
120924 >= 25*xabs
25*xabs = 120924
B
w7123
120932 >= 25*xabs
25*xabs = 120932
C
w7124
120937 >= 25*xabs
25*xabs = 120937
B
w7125
120944 >= 25*xabs
25*xabs = 120944
C
w7126
120956 >= 25*xabs
25*xabs = 120956
B
w7127
121047 >= 25*xabs
25*xabs = 121047
A
w7128
24211 >= 5*xabs
5*xabs = 24211
B
w7129
121058 >= 25*xabs
25*xabs = 121058
A
w7130
121067 >= 25*xabs
25*xabs = 121067
B
w7131
24214 >= 5*xabs
5*xabs = 24214
A
w7132
121079 >= 25*xabs

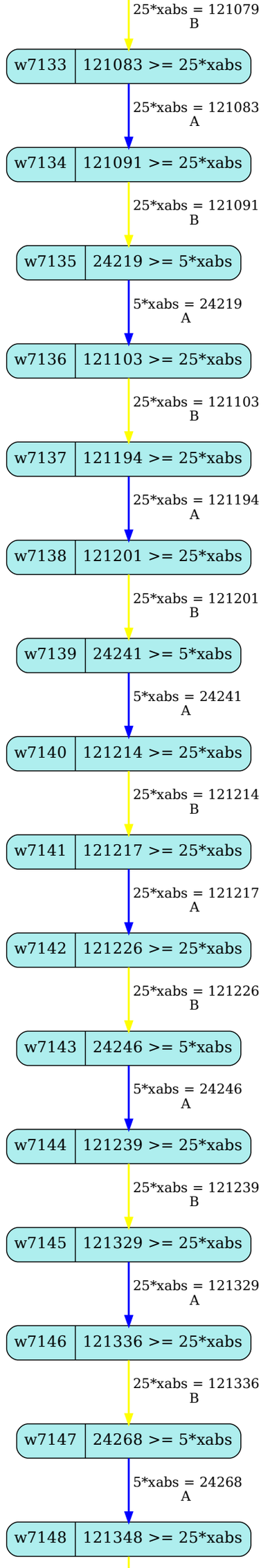
25*xabs = 121079
B
w7133
121083 >= 25*xabs
25*xabs = 121083
A
w7134
121091 >= 25*xabs
25*xabs = 121091
B
w7135
24219 >= 5*xabs
5*xabs = 24219
A
w7136
121103 >= 25*xabs
25*xabs = 121103
B
w7137
121194 >= 25*xabs
25*xabs = 121194
A
w7138
121201 >= 25*xabs
25*xabs = 121201
B
w7139
24241 >= 5*xabs
5*xabs = 24241
A
w7140
121214 >= 25*xabs
25*xabs = 121214
B
w7141
121217 >= 25*xabs
25*xabs = 121217
A
w7142
121226 >= 25*xabs
25*xabs = 121226
B
w7143
24246 >= 5*xabs
5*xabs = 24246
A
w7144
121239 >= 25*xabs
25*xabs = 121239
B
w7145
121329 >= 25*xabs
25*xabs = 121329
A
w7146
121336 >= 25*xabs
25*xabs = 121336
B
w7147
24268 >= 5*xabs
5*xabs = 24268
A
w7148
121348 >= 25*xabs

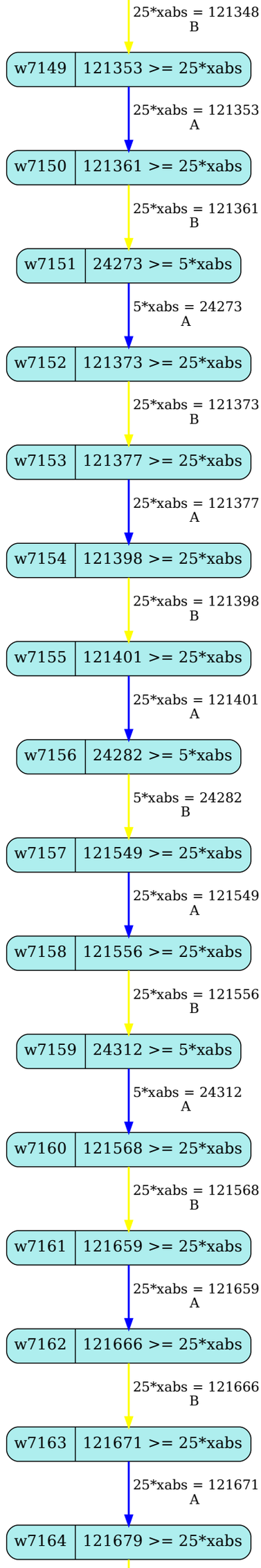
25*xabs = 121348
B
w7149
121353 >= 25*xabs
25*xabs = 121353
A
w7150
121361 >= 25*xabs
25*xabs = 121361
B
w7151
24273 >= 5*xabs
5*xabs = 24273
A
w7152
121373 >= 25*xabs
25*xabs = 121373
B
w7153
121377 >= 25*xabs
25*xabs = 121377
A
w7154
121398 >= 25*xabs
25*xabs = 121398
B
w7155
121401 >= 25*xabs
25*xabs = 121401
A
w7156
24282 >= 5*xabs
5*xabs = 24282
B
w7157
121549 >= 25*xabs
25*xabs = 121549
A
w7158
121556 >= 25*xabs
25*xabs = 121556
B
w7159
24312 >= 5*xabs
5*xabs = 24312
A
w7160
121568 >= 25*xabs
25*xabs = 121568
B
w7161
121659 >= 25*xabs
25*xabs = 121659
A
w7162
121666 >= 25*xabs
25*xabs = 121666
B
w7163
121671 >= 25*xabs
25*xabs = 121671
A
w7164
121679 >= 25*xabs

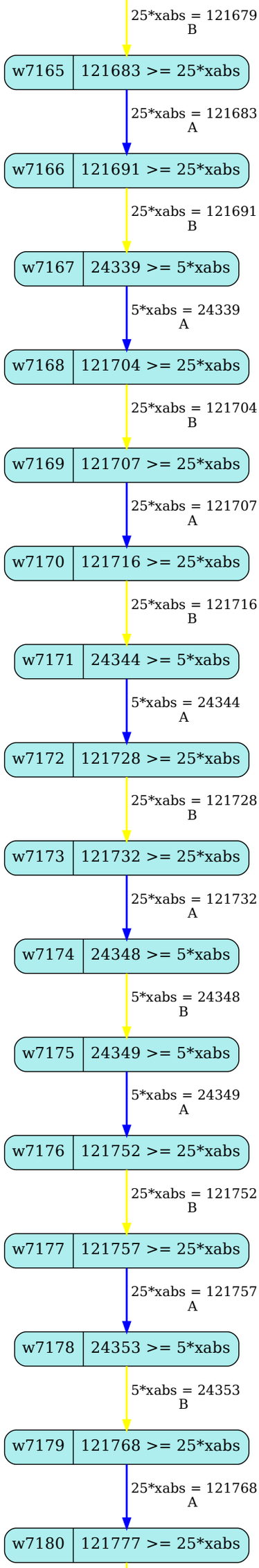
25*xabs = 121679
B
w7165
121683 >= 25*xabs
25*xabs = 121683
A
w7166
121691 >= 25*xabs
25*xabs = 121691
B
w7167
24339 >= 5*xabs
5*xabs = 24339
A
w7168
121704 >= 25*xabs
25*xabs = 121704
B
w7169
121707 >= 25*xabs
25*xabs = 121707
A
w7170
121716 >= 25*xabs
25*xabs = 121716
B
w7171
24344 >= 5*xabs
5*xabs = 24344
A
w7172
121728 >= 25*xabs
25*xabs = 121728
B
w7173
121732 >= 25*xabs
25*xabs = 121732
A
w7174
24348 >= 5*xabs
5*xabs = 24348
B
w7175
24349 >= 5*xabs
5*xabs = 24349
A
w7176
121752 >= 25*xabs
25*xabs = 121752
B
w7177
121757 >= 25*xabs
25*xabs = 121757
A
w7178
24353 >= 5*xabs
5*xabs = 24353
B
w7179
121768 >= 25*xabs
25*xabs = 121768
A
w7180
121777 >= 25*xabs

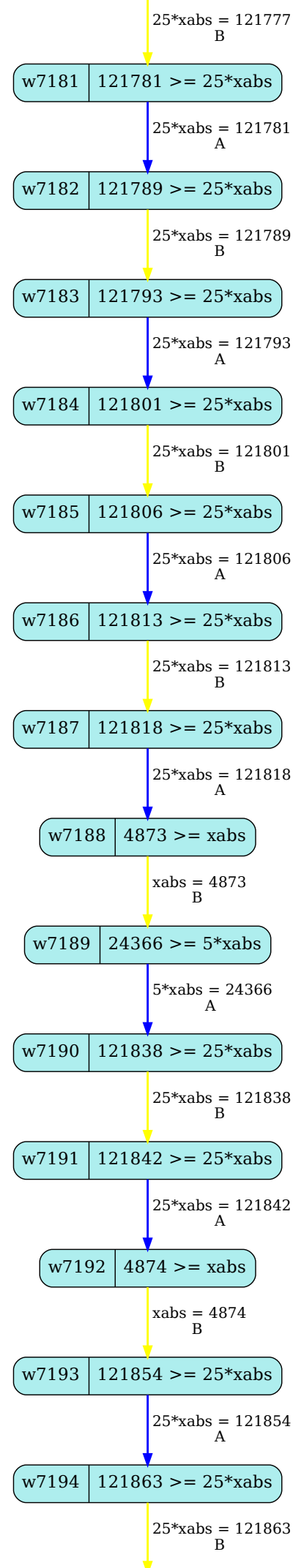
25*xabs = 121777
B
w7181
121781 >= 25*xabs
25*xabs = 121781
A
w7182
121789 >= 25*xabs
25*xabs = 121789
B
w7183
121793 >= 25*xabs
25*xabs = 121793
A
w7184
121801 >= 25*xabs
25*xabs = 121801
B
w7185
121806 >= 25*xabs
25*xabs = 121806
A
w7186
121813 >= 25*xabs
25*xabs = 121813
B
w7187
121818 >= 25*xabs
25*xabs = 121818
A
w7188
4873 >= xabs
xabs = 4873
B
w7189
24366 >= 5*xabs
5*xabs = 24366
A
w7190
121838 >= 25*xabs
25*xabs = 121838
B
w7191
121842 >= 25*xabs
25*xabs = 121842
A
w7192
4874 >= xabs
xabs = 4874
B
w7193
121854 >= 25*xabs
25*xabs = 121854
A
w7194
121863 >= 25*xabs
25*xabs = 121863
B

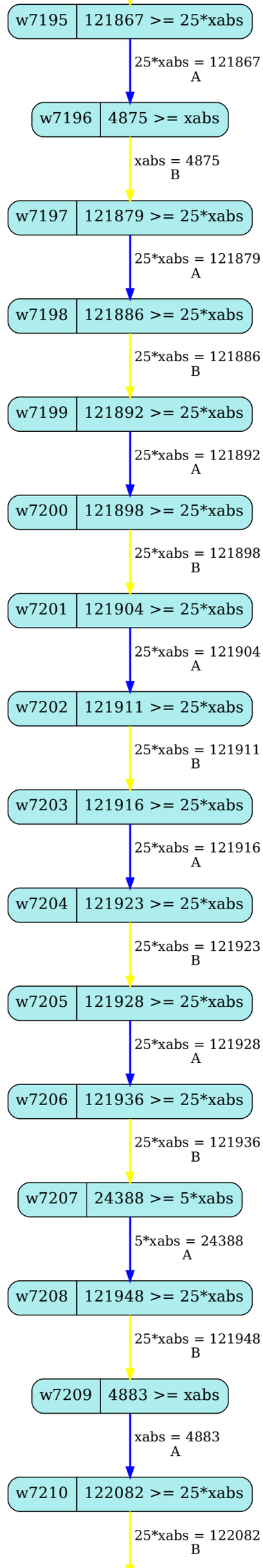
w7195
121867 >= 25*xabs
25*xabs = 121867
A
w7196
4875 >= xabs
xabs = 4875
B
w7197
121879 >= 25*xabs
25*xabs = 121879
A
w7198
121886 >= 25*xabs
25*xabs = 121886
B
w7199
121892 >= 25*xabs
25*xabs = 121892
A
w7200
121898 >= 25*xabs
25*xabs = 121898
B
w7201
121904 >= 25*xabs
25*xabs = 121904
A
w7202
121911 >= 25*xabs
25*xabs = 121911
B
w7203
121916 >= 25*xabs
25*xabs = 121916
A
w7204
121923 >= 25*xabs
25*xabs = 121923
B
w7205
121928 >= 25*xabs
25*xabs = 121928
A
w7206
121936 >= 25*xabs
25*xabs = 121936
B
w7207
24388 >= 5*xabs
5*xabs = 24388
A
w7208
121948 >= 25*xabs
25*xabs = 121948
B
w7209
4883 >= xabs
xabs = 4883
A
w7210
122082 >= 25*xabs
25*xabs = 122082
B

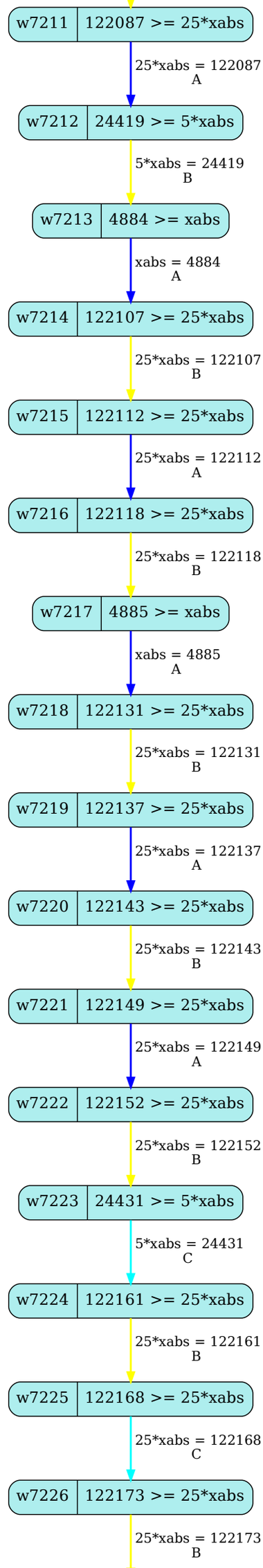
w7211
122087 >= 25*xabs
25*xabs = 122087
A
w7212
24419 >= 5*xabs
5*xabs = 24419
B
w7213
4884 >= xabs
xabs = 4884
A
w7214
122107 >= 25*xabs
25*xabs = 122107
B
w7215
122112 >= 25*xabs
25*xabs = 122112
A
w7216
122118 >= 25*xabs
25*xabs = 122118
B
w7217
4885 >= xabs
xabs = 4885
A
w7218
122131 >= 25*xabs
25*xabs = 122131
B
w7219
122137 >= 25*xabs
25*xabs = 122137
A
w7220
122143 >= 25*xabs
25*xabs = 122143
B
w7221
122149 >= 25*xabs
25*xabs = 122149
A
w7222
122152 >= 25*xabs
25*xabs = 122152
B
w7223
24431 >= 5*xabs
5*xabs = 24431
C
w7224
122161 >= 25*xabs
25*xabs = 122161
B
w7225
122168 >= 25*xabs
25*xabs = 122168
C
w7226
122173 >= 25*xabs
25*xabs = 122173
B

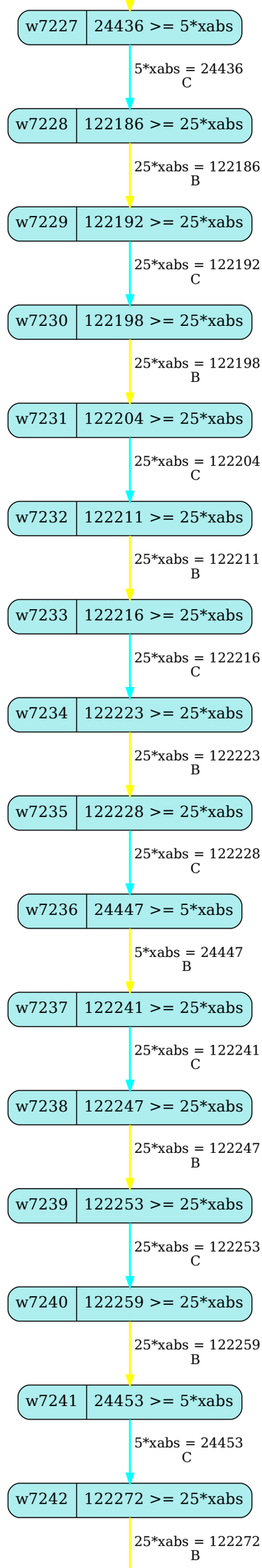
w7227
24436 >= 5*xabs
5*xabs = 24436
C
w7228
122186 >= 25*xabs
25*xabs = 122186
B
w7229
122192 >= 25*xabs
25*xabs = 122192
C
w7230
122198 >= 25*xabs
25*xabs = 122198
B
w7231
122204 >= 25*xabs
25*xabs = 122204
C
w7232
122211 >= 25*xabs
25*xabs = 122211
B
w7233
122216 >= 25*xabs
25*xabs = 122216
C
w7234
122223 >= 25*xabs
25*xabs = 122223
B
w7235
122228 >= 25*xabs
25*xabs = 122228
C
w7236
24447 >= 5*xabs
5*xabs = 24447
B
w7237
122241 >= 25*xabs
25*xabs = 122241
C
w7238
122247 >= 25*xabs
25*xabs = 122247
B
w7239
122253 >= 25*xabs
25*xabs = 122253
C
w7240
122259 >= 25*xabs
25*xabs = 122259
B
w7241
24453 >= 5*xabs
5*xabs = 24453
C
w7242
122272 >= 25*xabs
25*xabs = 122272
B

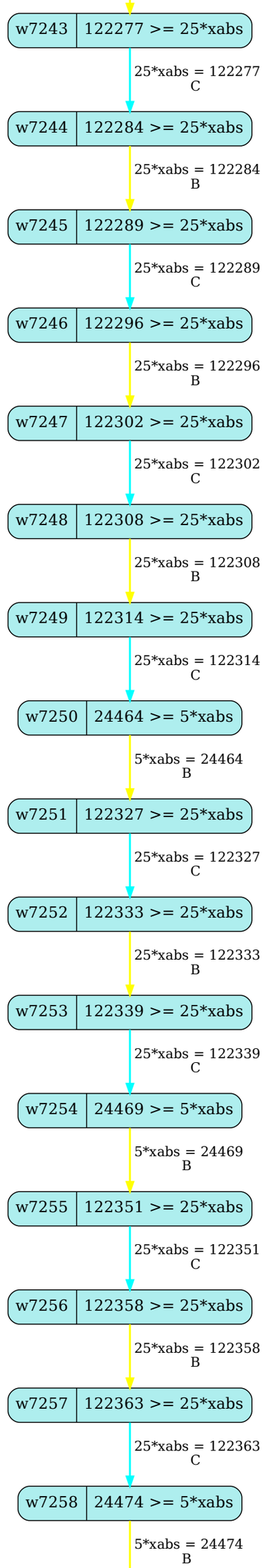
w7243
122277 >= 25*xabs
25*xabs = 122277
C
w7244
122284 >= 25*xabs
25*xabs = 122284
B
w7245
122289 >= 25*xabs
25*xabs = 122289
C
w7246
122296 >= 25*xabs
25*xabs = 122296
B
w7247
122302 >= 25*xabs
25*xabs = 122302
C
w7248
122308 >= 25*xabs
25*xabs = 122308
B
w7249
122314 >= 25*xabs
25*xabs = 122314
C
w7250
24464 >= 5*xabs
5*xabs = 24464
B
w7251
122327 >= 25*xabs
25*xabs = 122327
C
w7252
122333 >= 25*xabs
25*xabs = 122333
B
w7253
122339 >= 25*xabs
25*xabs = 122339
C
w7254
24469 >= 5*xabs
5*xabs = 24469
B
w7255
122351 >= 25*xabs
25*xabs = 122351
C
w7256
122358 >= 25*xabs
25*xabs = 122358
B
w7257
122363 >= 25*xabs
25*xabs = 122363
C
w7258
24474 >= 5*xabs
5*xabs = 24474
B

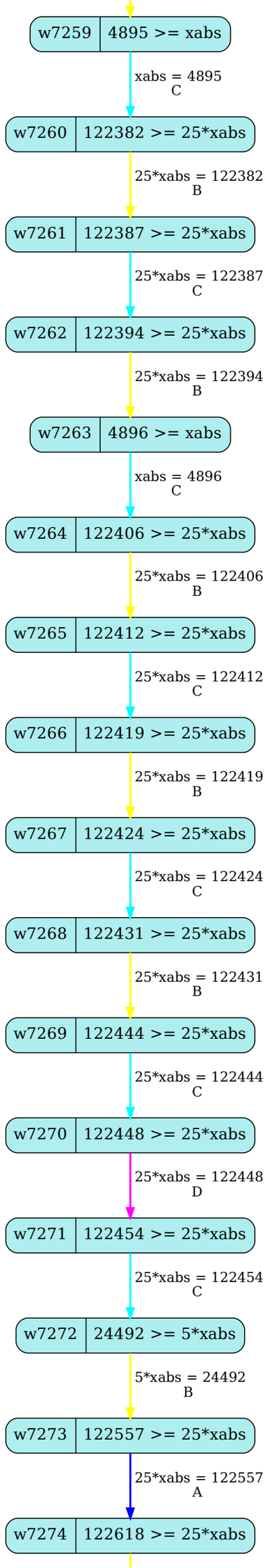
w7259
4895 >= xabs
xabs = 4895
C
w7260
122382 >= 25*xabs
25*xabs = 122382
B
w7261
122387 >= 25*xabs
25*xabs = 122387
C
w7262
122394 >= 25*xabs
25*xabs = 122394
B
w7263
4896 >= xabs
xabs = 4896
C
w7264
122406 >= 25*xabs
25*xabs = 122406
B
w7265
122412 >= 25*xabs
25*xabs = 122412
C
w7266
122419 >= 25*xabs
25*xabs = 122419
B
w7267
122424 >= 25*xabs
25*xabs = 122424
C
w7268
122431 >= 25*xabs
25*xabs = 122431
B
w7269
122444 >= 25*xabs
25*xabs = 122444
C
w7270
122448 >= 25*xabs
25*xabs = 122448
D
w7271
122454 >= 25*xabs
25*xabs = 122454
C
w7272
24492 >= 5*xabs
5*xabs = 24492
B
w7273
122557 >= 25*xabs
25*xabs = 122557
A
w7274
122618 >= 25*xabs

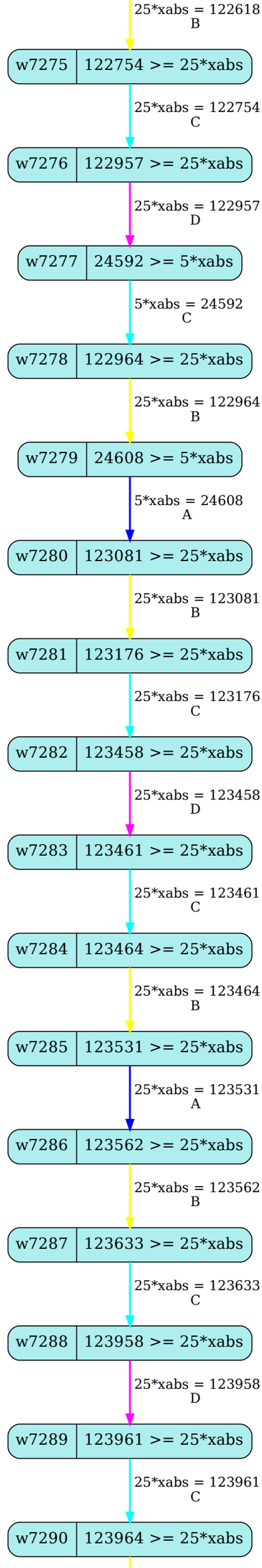
25*xabs = 122618
B
w7275
122754 >= 25*xabs
25*xabs = 122754
C
w7276
122957 >= 25*xabs
25*xabs = 122957
D
w7277
24592 >= 5*xabs
5*xabs = 24592
C
w7278
122964 >= 25*xabs
25*xabs = 122964
B
w7279
24608 >= 5*xabs
5*xabs = 24608
A
w7280
123081 >= 25*xabs
25*xabs = 123081
B
w7281
123176 >= 25*xabs
25*xabs = 123176
C
w7282
123458 >= 25*xabs
25*xabs = 123458
D
w7283
123461 >= 25*xabs
25*xabs = 123461
C
w7284
123464 >= 25*xabs
25*xabs = 123464
B
w7285
123531 >= 25*xabs
25*xabs = 123531
A
w7286
123562 >= 25*xabs
25*xabs = 123562
B
w7287
123633 >= 25*xabs
25*xabs = 123633
C
w7288
123958 >= 25*xabs
25*xabs = 123958
D
w7289
123961 >= 25*xabs
25*xabs = 123961
C
w7290
123964 >= 25*xabs

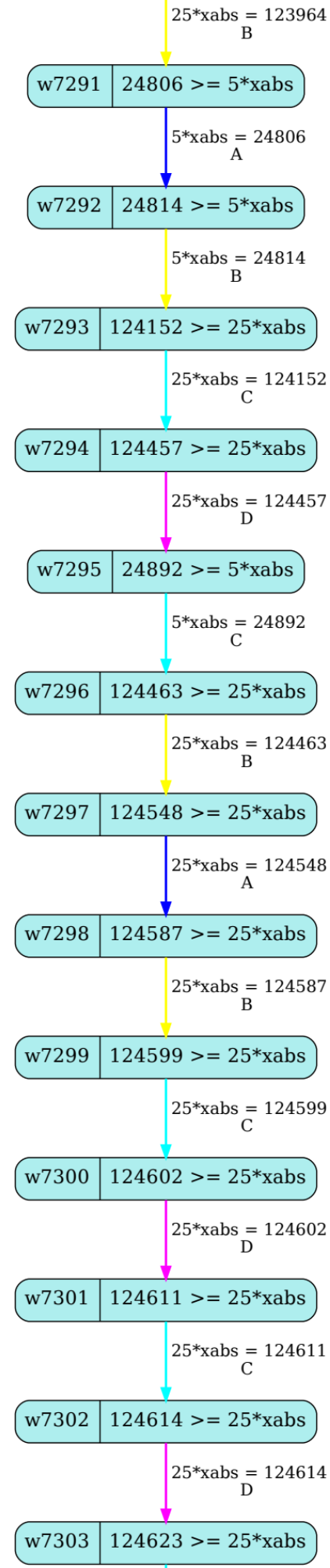
25*xabs = 123964
B
w7291
24806 >= 5*xabs
5*xabs = 24806
A
w7292
24814 >= 5*xabs
5*xabs = 24814
B
w7293
124152 >= 25*xabs
25*xabs = 124152
C
w7294
124457 >= 25*xabs
25*xabs = 124457
D
w7295
24892 >= 5*xabs
5*xabs = 24892
C
w7296
124463 >= 25*xabs
25*xabs = 124463
B
w7297
124548 >= 25*xabs
25*xabs = 124548
A
w7298
124587 >= 25*xabs
25*xabs = 124587
B
w7299
124599 >= 25*xabs
25*xabs = 124599
C
w7300
124602 >= 25*xabs
25*xabs = 124602
D
w7301
124611 >= 25*xabs
25*xabs = 124611
C
w7302
124614 >= 25*xabs
25*xabs = 124614
D
w7303
124623 >= 25*xabs

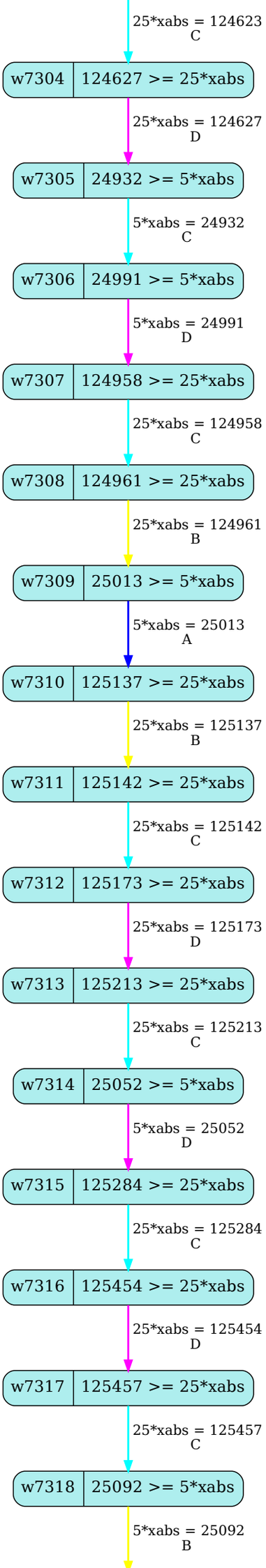
25*xabs = 124623
C
w7304
124627 >= 25*xabs
25*xabs = 124627
D
w7305
24932 >= 5*xabs
5*xabs = 24932
C
w7306
24991 >= 5*xabs
5*xabs = 24991
D
w7307
124958 >= 25*xabs
25*xabs = 124958
C
w7308
124961 >= 25*xabs
25*xabs = 124961
B
w7309
25013 >= 5*xabs
5*xabs = 25013
A
w7310
125137 >= 25*xabs
25*xabs = 125137
B
w7311
125142 >= 25*xabs
25*xabs = 125142
C
w7312
125173 >= 25*xabs
25*xabs = 125173
D
w7313
125213 >= 25*xabs
25*xabs = 125213
C
w7314
25052 >= 5*xabs
5*xabs = 25052
D
w7315
125284 >= 25*xabs
25*xabs = 125284
C
w7316
125454 >= 25*xabs
25*xabs = 125454
D
w7317
125457 >= 25*xabs
25*xabs = 125457
C
w7318
25092 >= 5*xabs
5*xabs = 25092
B

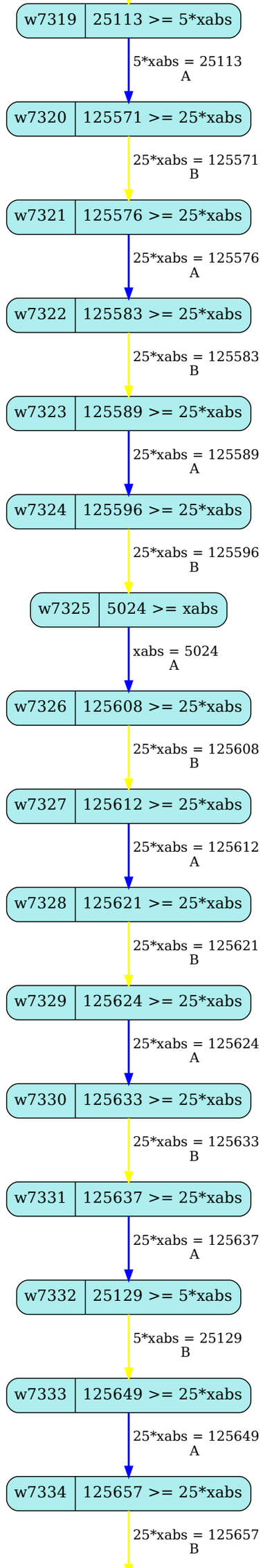
w7319
25113 >= 5*xabs
5*xabs = 25113
A
w7320
125571 >= 25*xabs
25*xabs = 125571
B
w7321
125576 >= 25*xabs
25*xabs = 125576
A
w7322
125583 >= 25*xabs
25*xabs = 125583
B
w7323
125589 >= 25*xabs
25*xabs = 125589
A
w7324
125596 >= 25*xabs
25*xabs = 125596
B
w7325
5024 >= xabs
xabs = 5024
A
w7326
125608 >= 25*xabs
25*xabs = 125608
B
w7327
125612 >= 25*xabs
25*xabs = 125612
A
w7328
125621 >= 25*xabs
25*xabs = 125621
B
w7329
125624 >= 25*xabs
25*xabs = 125624
A
w7330
125633 >= 25*xabs
25*xabs = 125633
B
w7331
125637 >= 25*xabs
25*xabs = 125637
A
w7332
25129 >= 5*xabs
5*xabs = 25129
B
w7333
125649 >= 25*xabs
25*xabs = 125649
A
w7334
125657 >= 25*xabs
25*xabs = 125657
B

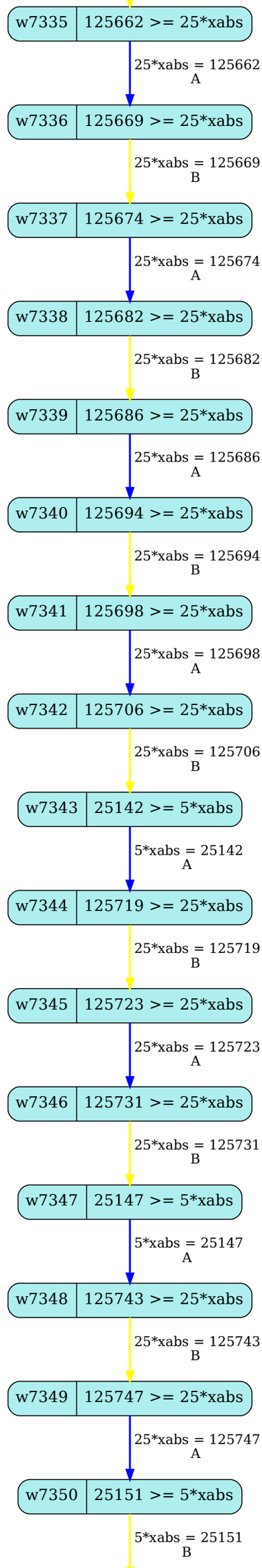
w7335
125662 >= 25*xabs
25*xabs = 125662
A
w7336
125669 >= 25*xabs
25*xabs = 125669
B
w7337
125674 >= 25*xabs
25*xabs = 125674
A
w7338
125682 >= 25*xabs
25*xabs = 125682
B
w7339
125686 >= 25*xabs
25*xabs = 125686
A
w7340
125694 >= 25*xabs
25*xabs = 125694
B
w7341
125698 >= 25*xabs
25*xabs = 125698
A
w7342
125706 >= 25*xabs
25*xabs = 125706
B
w7343
25142 >= 5*xabs
5*xabs = 25142
A
w7344
125719 >= 25*xabs
25*xabs = 125719
B
w7345
125723 >= 25*xabs
25*xabs = 125723
A
w7346
125731 >= 25*xabs
25*xabs = 125731
B
w7347
25147 >= 5*xabs
5*xabs = 25147
A
w7348
125743 >= 25*xabs
25*xabs = 125743
B
w7349
125747 >= 25*xabs
25*xabs = 125747
A
w7350
25151 >= 5*xabs
5*xabs = 25151
B

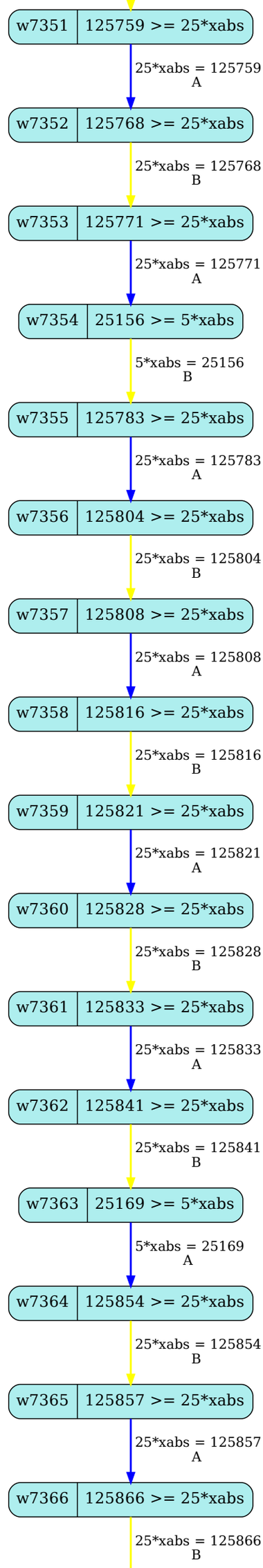
w7351
125759 >= 25*xabs
25*xabs = 125759
A
w7352
125768 >= 25*xabs
25*xabs = 125768
B
w7353
125771 >= 25*xabs
25*xabs = 125771
A
w7354
25156 >= 5*xabs
5*xabs = 25156
B
w7355
125783 >= 25*xabs
25*xabs = 125783
A
w7356
125804 >= 25*xabs
25*xabs = 125804
B
w7357
125808 >= 25*xabs
25*xabs = 125808
A
w7358
125816 >= 25*xabs
25*xabs = 125816
B
w7359
125821 >= 25*xabs
25*xabs = 125821
A
w7360
125828 >= 25*xabs
25*xabs = 125828
B
w7361
125833 >= 25*xabs
25*xabs = 125833
A
w7362
125841 >= 25*xabs
25*xabs = 125841
B
w7363
25169 >= 5*xabs
5*xabs = 25169
A
w7364
125854 >= 25*xabs
25*xabs = 125854
B
w7365
125857 >= 25*xabs
25*xabs = 125857
A
w7366
125866 >= 25*xabs
25*xabs = 125866
B

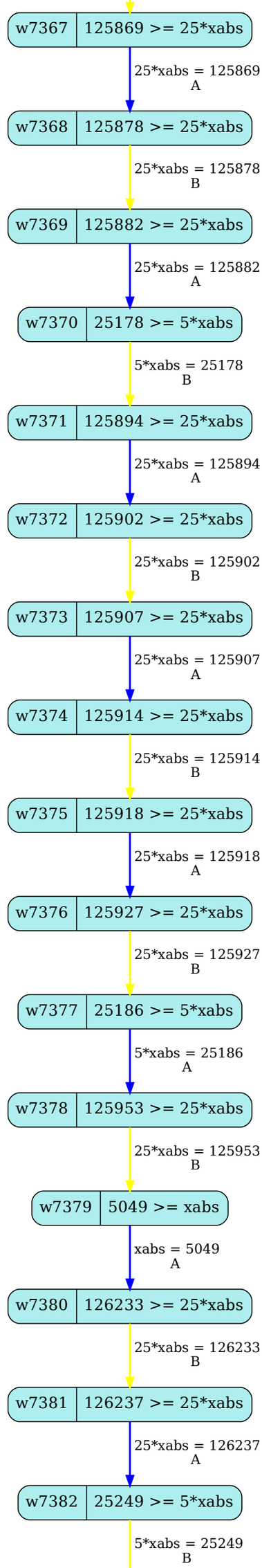
w7367
125869 >= 25*xabs
25*xabs = 125869
A
w7368
125878 >= 25*xabs
25*xabs = 125878
B
w7369
125882 >= 25*xabs
25*xabs = 125882
A
w7370
25178 >= 5*xabs
5*xabs = 25178
B
w7371
125894 >= 25*xabs
25*xabs = 125894
A
w7372
125902 >= 25*xabs
25*xabs = 125902
B
w7373
125907 >= 25*xabs
25*xabs = 125907
A
w7374
125914 >= 25*xabs
25*xabs = 125914
B
w7375
125918 >= 25*xabs
25*xabs = 125918
A
w7376
125927 >= 25*xabs
25*xabs = 125927
B
w7377
25186 >= 5*xabs
5*xabs = 25186
A
w7378
125953 >= 25*xabs
25*xabs = 125953
B
w7379
5049 >= xabs
xabs = 5049
A
w7380
126233 >= 25*xabs
25*xabs = 126233
B
w7381
126237 >= 25*xabs
25*xabs = 126237
A
w7382
25249 >= 5*xabs
5*xabs = 25249
B

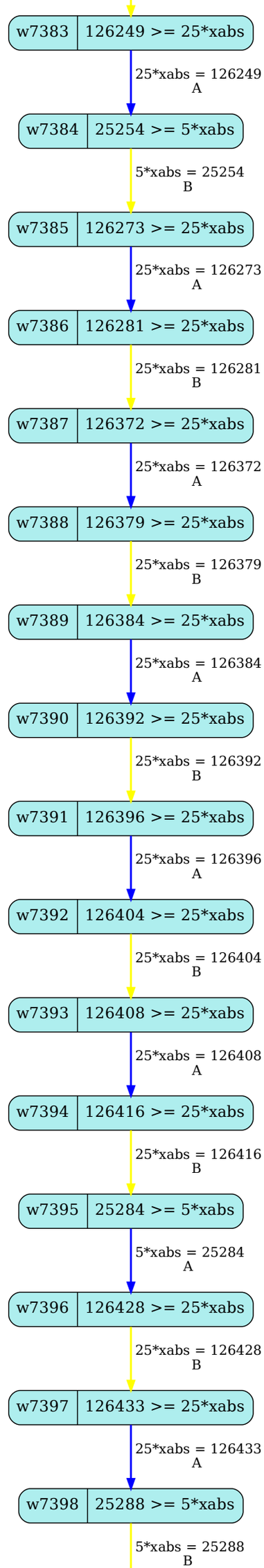
w7383
126249 >= 25*xabs
25*xabs = 126249
A
w7384
25254 >= 5*xabs
5*xabs = 25254
B
w7385
126273 >= 25*xabs
25*xabs = 126273
A
w7386
126281 >= 25*xabs
25*xabs = 126281
B
w7387
126372 >= 25*xabs
25*xabs = 126372
A
w7388
126379 >= 25*xabs
25*xabs = 126379
B
w7389
126384 >= 25*xabs
25*xabs = 126384
A
w7390
126392 >= 25*xabs
25*xabs = 126392
B
w7391
126396 >= 25*xabs
25*xabs = 126396
A
w7392
126404 >= 25*xabs
25*xabs = 126404
B
w7393
126408 >= 25*xabs
25*xabs = 126408
A
w7394
126416 >= 25*xabs
25*xabs = 126416
B
w7395
25284 >= 5*xabs
5*xabs = 25284
A
w7396
126428 >= 25*xabs
25*xabs = 126428
B
w7397
126433 >= 25*xabs
25*xabs = 126433
A
w7398
25288 >= 5*xabs
5*xabs = 25288
B

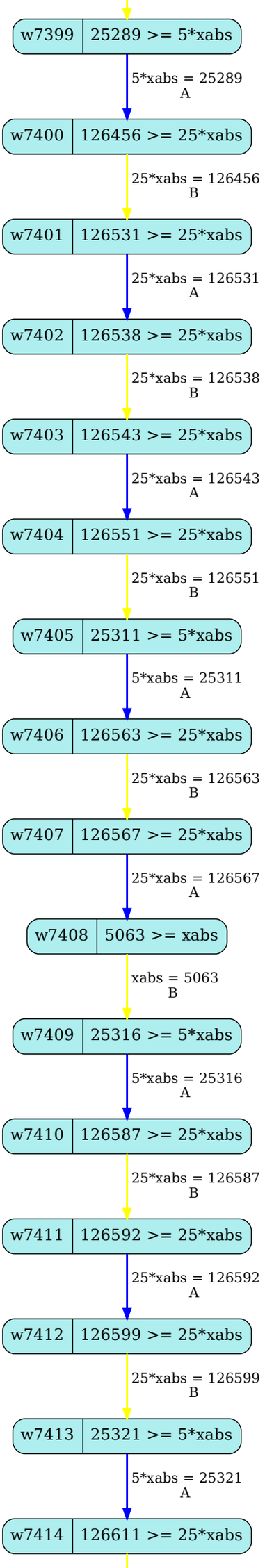
w7399
25289 >= 5*xabs
5*xabs = 25289
A
w7400
126456 >= 25*xabs
25*xabs = 126456
B
w7401
126531 >= 25*xabs
25*xabs = 126531
A
w7402
126538 >= 25*xabs
25*xabs = 126538
B
w7403
126543 >= 25*xabs
25*xabs = 126543
A
w7404
126551 >= 25*xabs
25*xabs = 126551
B
w7405
25311 >= 5*xabs
5*xabs = 25311
A
w7406
126563 >= 25*xabs
25*xabs = 126563
B
w7407
126567 >= 25*xabs
25*xabs = 126567
A
w7408
5063 >= xabs
xabs = 5063
B
w7409
25316 >= 5*xabs
5*xabs = 25316
A
w7410
126587 >= 25*xabs
25*xabs = 126587
B
w7411
126592 >= 25*xabs
25*xabs = 126592
A
w7412
126599 >= 25*xabs
25*xabs = 126599
B
w7413
25321 >= 5*xabs
5*xabs = 25321
A
w7414
126611 >= 25*xabs

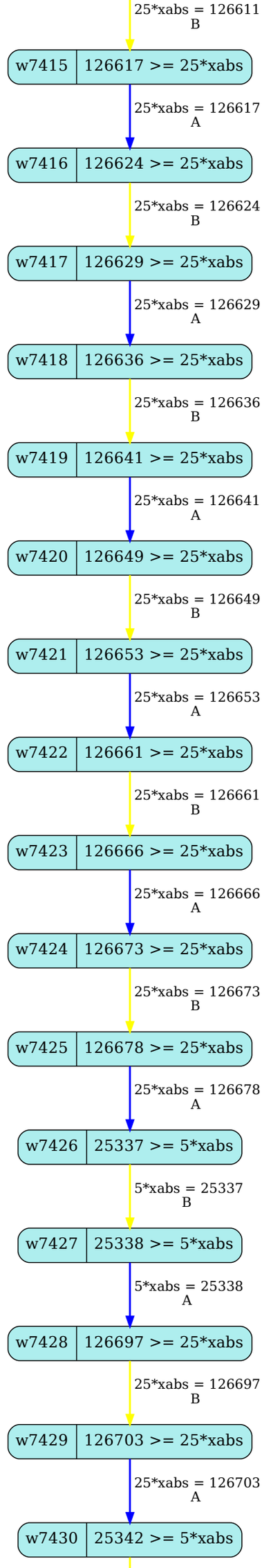
25*xabs = 126611
B
w7415
126617 >= 25*xabs
25*xabs = 126617
A
w7416
126624 >= 25*xabs
25*xabs = 126624
B
w7417
126629 >= 25*xabs
25*xabs = 126629
A
w7418
126636 >= 25*xabs
25*xabs = 126636
B
w7419
126641 >= 25*xabs
25*xabs = 126641
A
w7420
126649 >= 25*xabs
25*xabs = 126649
B
w7421
126653 >= 25*xabs
25*xabs = 126653
A
w7422
126661 >= 25*xabs
25*xabs = 126661
B
w7423
126666 >= 25*xabs
25*xabs = 126666
A
w7424
126673 >= 25*xabs
25*xabs = 126673
B
w7425
126678 >= 25*xabs
25*xabs = 126678
A
w7426
25337 >= 5*xabs
5*xabs = 25337
B
w7427
25338 >= 5*xabs
5*xabs = 25338
A
w7428
126697 >= 25*xabs
25*xabs = 126697
B
w7429
126703 >= 25*xabs
25*xabs = 126703
A
w7430
25342 >= 5*xabs

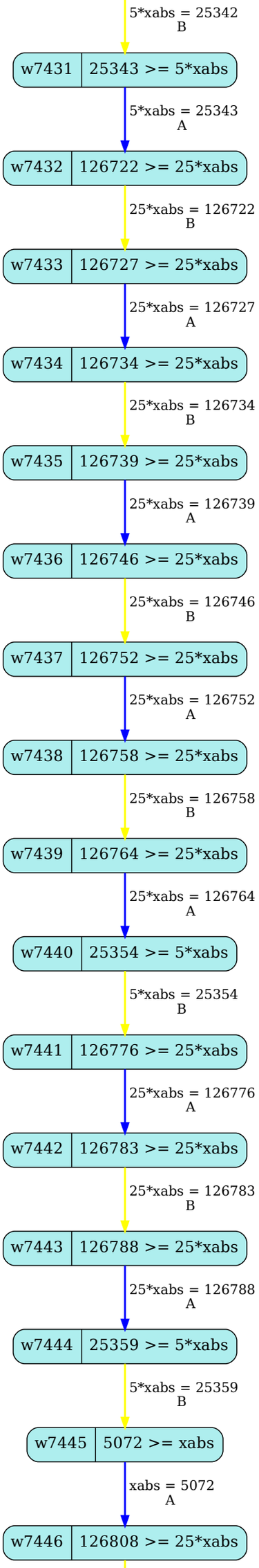
5*xabs = 25342
B
w7431
25343 >= 5*xabs
5*xabs = 25343
A
w7432
126722 >= 25*xabs
25*xabs = 126722
B
w7433
126727 >= 25*xabs
25*xabs = 126727
A
w7434
126734 >= 25*xabs
25*xabs = 126734
B
w7435
126739 >= 25*xabs
25*xabs = 126739
A
w7436
126746 >= 25*xabs
25*xabs = 126746
B
w7437
126752 >= 25*xabs
25*xabs = 126752
A
w7438
126758 >= 25*xabs
25*xabs = 126758
B
w7439
126764 >= 25*xabs
25*xabs = 126764
A
w7440
25354 >= 5*xabs
5*xabs = 25354
B
w7441
126776 >= 25*xabs
25*xabs = 126776
A
w7442
126783 >= 25*xabs
25*xabs = 126783
B
w7443
126788 >= 25*xabs
25*xabs = 126788
A
w7444
25359 >= 5*xabs
5*xabs = 25359
B
w7445
5072 >= xabs
xabs = 5072
A
w7446
126808 >= 25*xabs

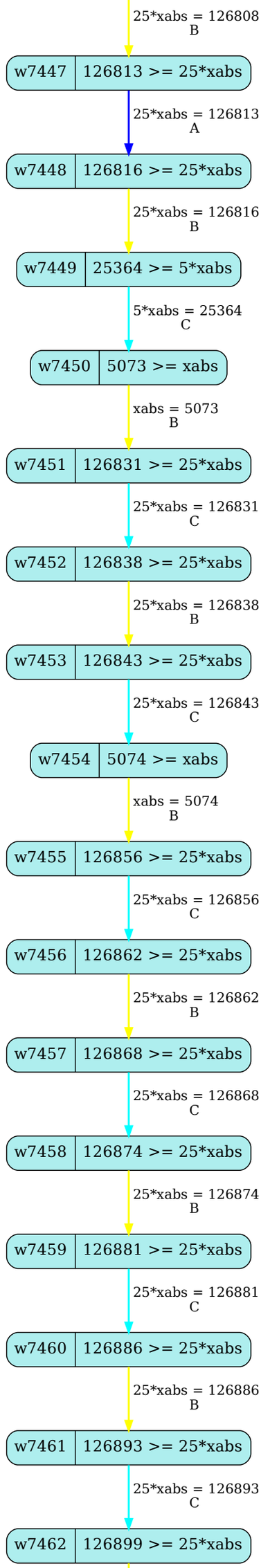
25*xabs = 126808
B
w7447
126813 >= 25*xabs
25*xabs = 126813
A
w7448
126816 >= 25*xabs
25*xabs = 126816
B
w7449
25364 >= 5*xabs
5*xabs = 25364
C
w7450
5073 >= xabs
xabs = 5073
B
w7451
126831 >= 25*xabs
25*xabs = 126831
C
w7452
126838 >= 25*xabs
25*xabs = 126838
B
w7453
126843 >= 25*xabs
25*xabs = 126843
C
w7454
5074 >= xabs
xabs = 5074
B
w7455
126856 >= 25*xabs
25*xabs = 126856
C
w7456
126862 >= 25*xabs
25*xabs = 126862
B
w7457
126868 >= 25*xabs
25*xabs = 126868
C
w7458
126874 >= 25*xabs
25*xabs = 126874
B
w7459
126881 >= 25*xabs
25*xabs = 126881
C
w7460
126886 >= 25*xabs
25*xabs = 126886
B
w7461
126893 >= 25*xabs
25*xabs = 126893
C
w7462
126899 >= 25*xabs

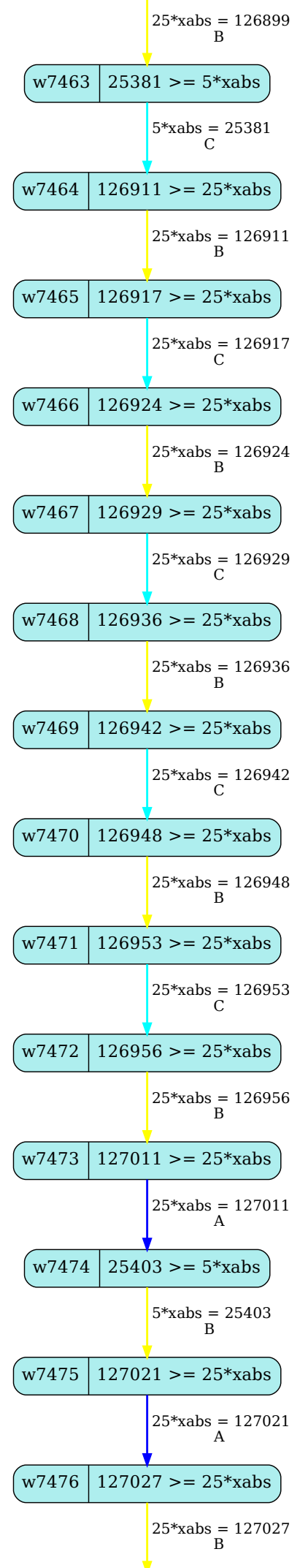
25*xabs = 126899
B
w7463
25381 >= 5*xabs
5*xabs = 25381
C
w7464
126911 >= 25*xabs
25*xabs = 126911
B
w7465
126917 >= 25*xabs
25*xabs = 126917
C
w7466
126924 >= 25*xabs
25*xabs = 126924
B
w7467
126929 >= 25*xabs
25*xabs = 126929
C
w7468
126936 >= 25*xabs
25*xabs = 126936
B
w7469
126942 >= 25*xabs
25*xabs = 126942
C
w7470
126948 >= 25*xabs
25*xabs = 126948
B
w7471
126953 >= 25*xabs
25*xabs = 126953
C
w7472
126956 >= 25*xabs
25*xabs = 126956
B
w7473
127011 >= 25*xabs
25*xabs = 127011
A
w7474
25403 >= 5*xabs
5*xabs = 25403
B
w7475
127021 >= 25*xabs
25*xabs = 127021
A
w7476
127027 >= 25*xabs
25*xabs = 127027
B

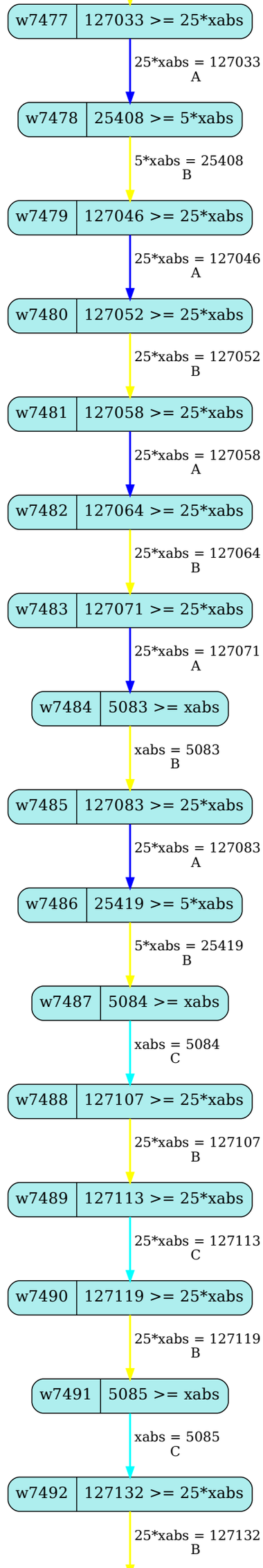
w7477
127033 >= 25*xabs
25*xabs = 127033
A
w7478
25408 >= 5*xabs
5*xabs = 25408
B
w7479
127046 >= 25*xabs
25*xabs = 127046
A
w7480
127052 >= 25*xabs
25*xabs = 127052
B
w7481
127058 >= 25*xabs
25*xabs = 127058
A
w7482
127064 >= 25*xabs
25*xabs = 127064
B
w7483
127071 >= 25*xabs
25*xabs = 127071
A
w7484
5083 >= xabs
xabs = 5083
B
w7485
127083 >= 25*xabs
25*xabs = 127083
A
w7486
25419 >= 5*xabs
5*xabs = 25419
B
w7487
5084 >= xabs
xabs = 5084
C
w7488
127107 >= 25*xabs
25*xabs = 127107
B
w7489
127113 >= 25*xabs
25*xabs = 127113
C
w7490
127119 >= 25*xabs
25*xabs = 127119
B
w7491
5085 >= xabs
xabs = 5085
C
w7492
127132 >= 25*xabs
25*xabs = 127132
B

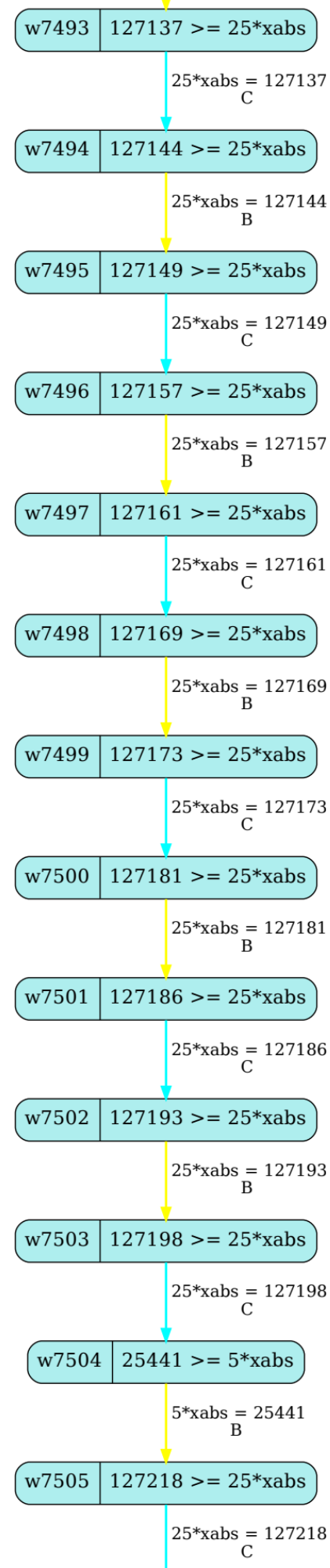
w7493
127137 >= 25*xabs
25*xabs = 127137
C
w7494
127144 >= 25*xabs
25*xabs = 127144
B
w7495
127149 >= 25*xabs
25*xabs = 127149
C
w7496
127157 >= 25*xabs
25*xabs = 127157
B
w7497
127161 >= 25*xabs
25*xabs = 127161
C
w7498
127169 >= 25*xabs
25*xabs = 127169
B
w7499
127173 >= 25*xabs
25*xabs = 127173
C
w7500
127181 >= 25*xabs
25*xabs = 127181
B
w7501
127186 >= 25*xabs
25*xabs = 127186
C
w7502
127193 >= 25*xabs
25*xabs = 127193
B
w7503
127198 >= 25*xabs
25*xabs = 127198
C
w7504
25441 >= 5*xabs
5*xabs = 25441
B
w7505
127218 >= 25*xabs
25*xabs = 127218
C

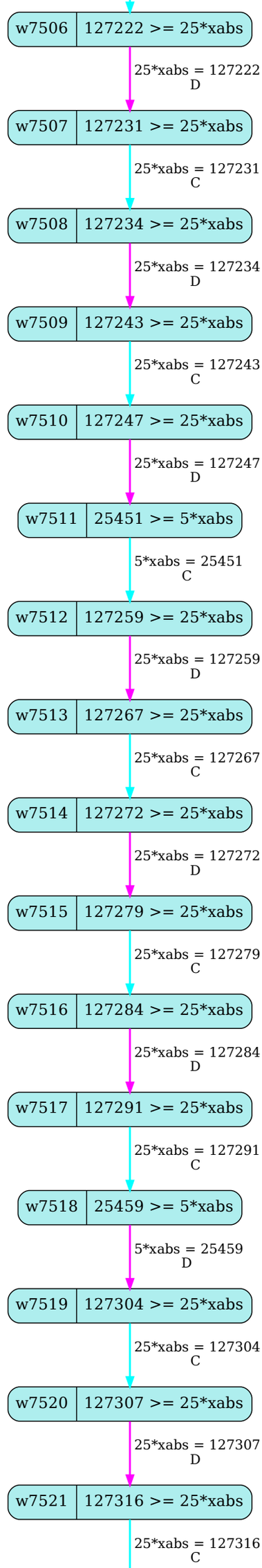
w7506
127222 >= 25*xabs
25*xabs = 127222
D
w7507
127231 >= 25*xabs
25*xabs = 127231
C
w7508
127234 >= 25*xabs
25*xabs = 127234
D
w7509
127243 >= 25*xabs
25*xabs = 127243
C
w7510
127247 >= 25*xabs
25*xabs = 127247
D
w7511
25451 >= 5*xabs
5*xabs = 25451
C
w7512
127259 >= 25*xabs
25*xabs = 127259
D
w7513
127267 >= 25*xabs
25*xabs = 127267
C
w7514
127272 >= 25*xabs
25*xabs = 127272
D
w7515
127279 >= 25*xabs
25*xabs = 127279
C
w7516
127284 >= 25*xabs
25*xabs = 127284
D
w7517
127291 >= 25*xabs
25*xabs = 127291
C
w7518
25459 >= 5*xabs
5*xabs = 25459
D
w7519
127304 >= 25*xabs
25*xabs = 127304
C
w7520
127307 >= 25*xabs
25*xabs = 127307
D
w7521
127316 >= 25*xabs
25*xabs = 127316
C

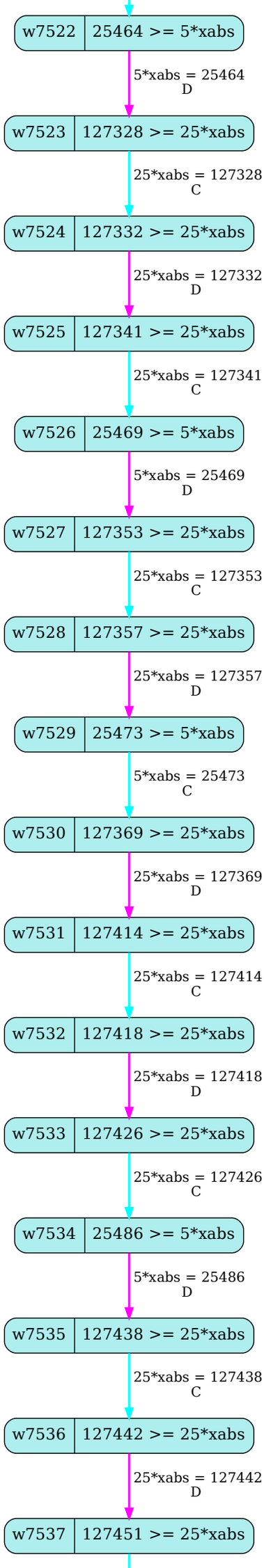
w7522
25464 >= 5*xabs
5*xabs = 25464
D
w7523
127328 >= 25*xabs
25*xabs = 127328
C
w7524
127332 >= 25*xabs
25*xabs = 127332
D
w7525
127341 >= 25*xabs
25*xabs = 127341
C
w7526
25469 >= 5*xabs
5*xabs = 25469
D
w7527
127353 >= 25*xabs
25*xabs = 127353
C
w7528
127357 >= 25*xabs
25*xabs = 127357
D
w7529
25473 >= 5*xabs
5*xabs = 25473
C
w7530
127369 >= 25*xabs
25*xabs = 127369
D
w7531
127414 >= 25*xabs
25*xabs = 127414
C
w7532
127418 >= 25*xabs
25*xabs = 127418
D
w7533
127426 >= 25*xabs
25*xabs = 127426
C
w7534
25486 >= 5*xabs
5*xabs = 25486
D
w7535
127438 >= 25*xabs
25*xabs = 127438
C
w7536
127442 >= 25*xabs
25*xabs = 127442
D
w7537
127451 >= 25*xabs

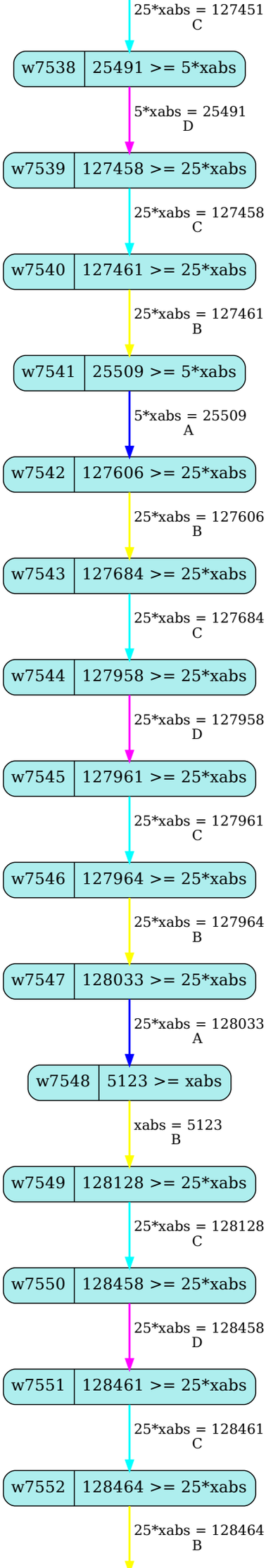
25*xabs = 127451
C
w7538
25491 >= 5*xabs
5*xabs = 25491
D
w7539
127458 >= 25*xabs
25*xabs = 127458
C
w7540
127461 >= 25*xabs
25*xabs = 127461
B
w7541
25509 >= 5*xabs
5*xabs = 25509
A
w7542
127606 >= 25*xabs
25*xabs = 127606
B
w7543
127684 >= 25*xabs
25*xabs = 127684
C
w7544
127958 >= 25*xabs
25*xabs = 127958
D
w7545
127961 >= 25*xabs
25*xabs = 127961
C
w7546
127964 >= 25*xabs
25*xabs = 127964
B
w7547
128033 >= 25*xabs
25*xabs = 128033
A
w7548
5123 >= xabs
xabs = 5123
B
w7549
128128 >= 25*xabs
25*xabs = 128128
C
w7550
128458 >= 25*xabs
25*xabs = 128458
D
w7551
128461 >= 25*xabs
25*xabs = 128461
C
w7552
128464 >= 25*xabs
25*xabs = 128464
B

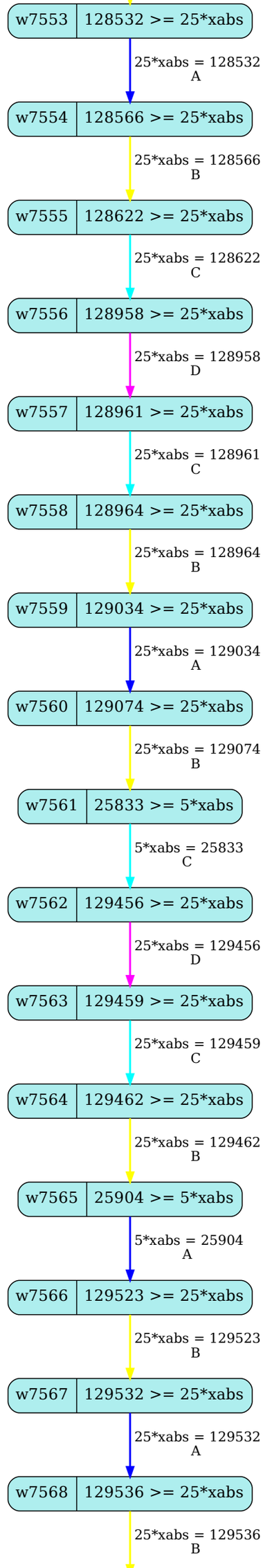
w7553
128532 >= 25*xabs
25*xabs = 128532
A
w7554
128566 >= 25*xabs
25*xabs = 128566
B
w7555
128622 >= 25*xabs
25*xabs = 128622
C
w7556
128958 >= 25*xabs
25*xabs = 128958
D
w7557
128961 >= 25*xabs
25*xabs = 128961
C
w7558
128964 >= 25*xabs
25*xabs = 128964
B
w7559
129034 >= 25*xabs
25*xabs = 129034
A
w7560
129074 >= 25*xabs
25*xabs = 129074
B
w7561
25833 >= 5*xabs
5*xabs = 25833
C
w7562
129456 >= 25*xabs
25*xabs = 129456
D
w7563
129459 >= 25*xabs
25*xabs = 129459
C
w7564
129462 >= 25*xabs
25*xabs = 129462
B
w7565
25904 >= 5*xabs
5*xabs = 25904
A
w7566
129523 >= 25*xabs
25*xabs = 129523
B
w7567
129532 >= 25*xabs
25*xabs = 129532
A
w7568
129536 >= 25*xabs
25*xabs = 129536
B

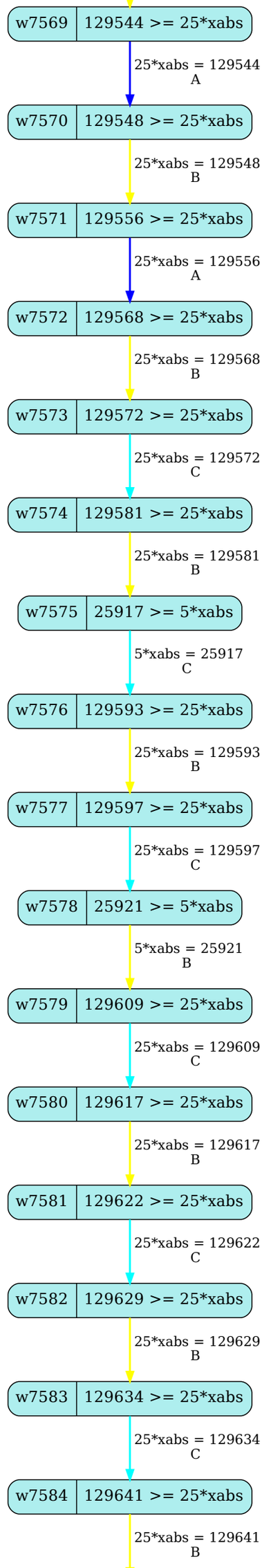
w7569
129544 >= 25*xabs
25*xabs = 129544
A
w7570
129548 >= 25*xabs
25*xabs = 129548
B
w7571
129556 >= 25*xabs
25*xabs = 129556
A
w7572
129568 >= 25*xabs
25*xabs = 129568
B
w7573
129572 >= 25*xabs
25*xabs = 129572
C
w7574
129581 >= 25*xabs
25*xabs = 129581
B
w7575
25917 >= 5*xabs
5*xabs = 25917
C
w7576
129593 >= 25*xabs
25*xabs = 129593
B
w7577
129597 >= 25*xabs
25*xabs = 129597
C
w7578
25921 >= 5*xabs
5*xabs = 25921
B
w7579
129609 >= 25*xabs
25*xabs = 129609
C
w7580
129617 >= 25*xabs
25*xabs = 129617
B
w7581
129622 >= 25*xabs
25*xabs = 129622
C
w7582
129629 >= 25*xabs
25*xabs = 129629
B
w7583
129634 >= 25*xabs
25*xabs = 129634
C
w7584
129641 >= 25*xabs
25*xabs = 129641
B

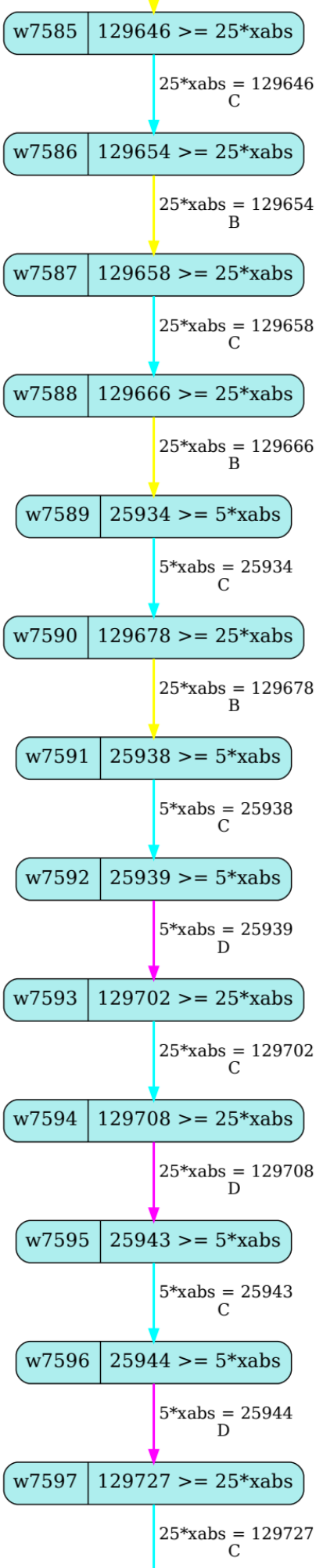
w7585
129646 >= 25*xabs
25*xabs = 129646
C
w7586
129654 >= 25*xabs
25*xabs = 129654
B
w7587
129658 >= 25*xabs
25*xabs = 129658
C
w7588
129666 >= 25*xabs
25*xabs = 129666
B
w7589
25934 >= 5*xabs
5*xabs = 25934
C
w7590
129678 >= 25*xabs
25*xabs = 129678
B
w7591
25938 >= 5*xabs
5*xabs = 25938
C
w7592
25939 >= 5*xabs
5*xabs = 25939
D
w7593
129702 >= 25*xabs
25*xabs = 129702
C
w7594
129708 >= 25*xabs
25*xabs = 129708
D
w7595
25943 >= 5*xabs
5*xabs = 25943
C
w7596
25944 >= 5*xabs
5*xabs = 25944
D
w7597
129727 >= 25*xabs
25*xabs = 129727
C

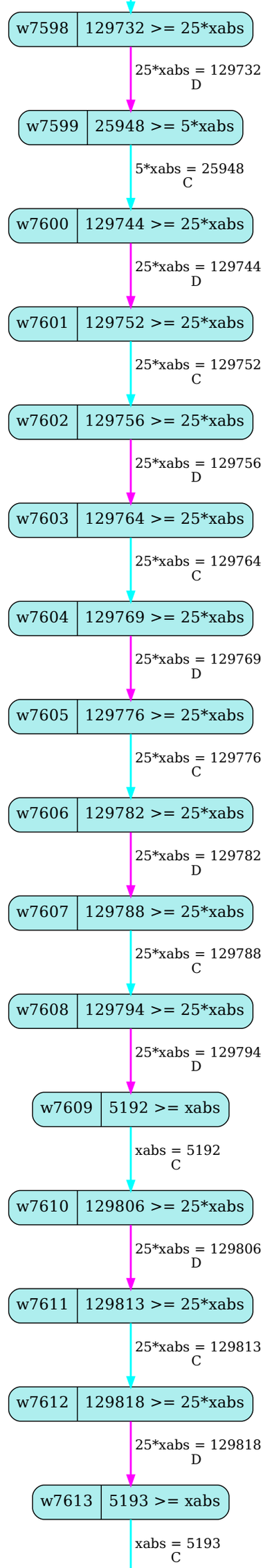
w7598
129732 >= 25*xabs
25*xabs = 129732
D
w7599
25948 >= 5*xabs
5*xabs = 25948
C
w7600
129744 >= 25*xabs
25*xabs = 129744
D
w7601
129752 >= 25*xabs
25*xabs = 129752
C
w7602
129756 >= 25*xabs
25*xabs = 129756
D
w7603
129764 >= 25*xabs
25*xabs = 129764
C
w7604
129769 >= 25*xabs
25*xabs = 129769
D
w7605
129776 >= 25*xabs
25*xabs = 129776
C
w7606
129782 >= 25*xabs
25*xabs = 129782
D
w7607
129788 >= 25*xabs
25*xabs = 129788
C
w7608
129794 >= 25*xabs
25*xabs = 129794
D
w7609
5192 >= xabs
xabs = 5192
C
w7610
129806 >= 25*xabs
25*xabs = 129806
D
w7611
129813 >= 25*xabs
25*xabs = 129813
C
w7612
129818 >= 25*xabs
25*xabs = 129818
D
w7613
5193 >= xabs
xabs = 5193
C

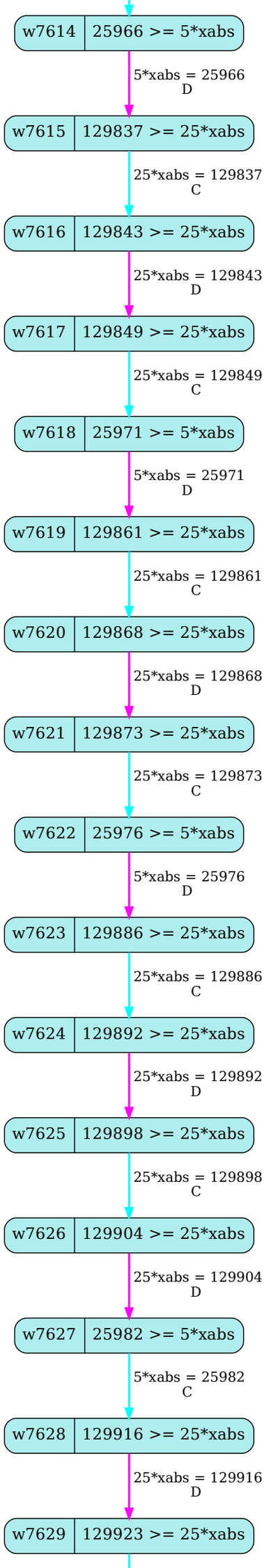
w7614
25966 >= 5*xabs
5*xabs = 25966
D
w7615
129837 >= 25*xabs
25*xabs = 129837
C
w7616
129843 >= 25*xabs
25*xabs = 129843
D
w7617
129849 >= 25*xabs
25*xabs = 129849
C
w7618
25971 >= 5*xabs
5*xabs = 25971
D
w7619
129861 >= 25*xabs
25*xabs = 129861
C
w7620
129868 >= 25*xabs
25*xabs = 129868
D
w7621
129873 >= 25*xabs
25*xabs = 129873
C
w7622
25976 >= 5*xabs
5*xabs = 25976
D
w7623
129886 >= 25*xabs
25*xabs = 129886
C
w7624
129892 >= 25*xabs
25*xabs = 129892
D
w7625
129898 >= 25*xabs
25*xabs = 129898
C
w7626
129904 >= 25*xabs
25*xabs = 129904
D
w7627
25982 >= 5*xabs
5*xabs = 25982
C
w7628
129916 >= 25*xabs
25*xabs = 129916
D
w7629
129923 >= 25*xabs

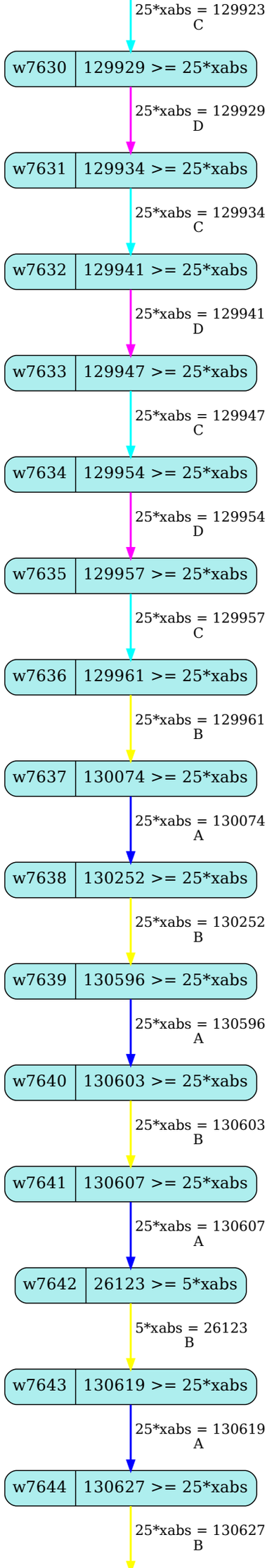
25*xabs = 129923
C
w7630
129929 >= 25*xabs
25*xabs = 129929
D
w7631
129934 >= 25*xabs
25*xabs = 129934
C
w7632
129941 >= 25*xabs
25*xabs = 129941
D
w7633
129947 >= 25*xabs
25*xabs = 129947
C
w7634
129954 >= 25*xabs
25*xabs = 129954
D
w7635
129957 >= 25*xabs
25*xabs = 129957
C
w7636
129961 >= 25*xabs
25*xabs = 129961
B
w7637
130074 >= 25*xabs
25*xabs = 130074
A
w7638
130252 >= 25*xabs
25*xabs = 130252
B
w7639
130596 >= 25*xabs
25*xabs = 130596
A
w7640
130603 >= 25*xabs
25*xabs = 130603
B
w7641
130607 >= 25*xabs
25*xabs = 130607
A
w7642
26123 >= 5*xabs
5*xabs = 26123
B
w7643
130619 >= 25*xabs
25*xabs = 130619
A
w7644
130627 >= 25*xabs
25*xabs = 130627
B

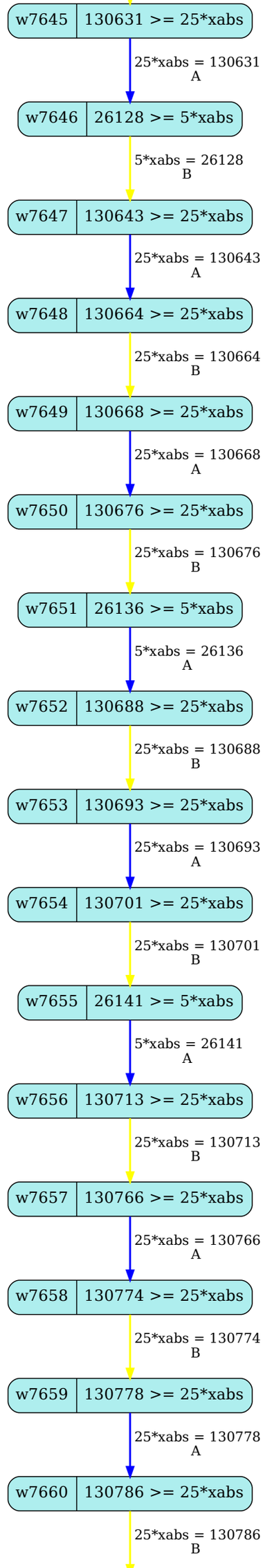
w7645
130631 >= 25*xabs
25*xabs = 130631
A
w7646
26128 >= 5*xabs
5*xabs = 26128
B
w7647
130643 >= 25*xabs
25*xabs = 130643
A
w7648
130664 >= 25*xabs
25*xabs = 130664
B
w7649
130668 >= 25*xabs
25*xabs = 130668
A
w7650
130676 >= 25*xabs
25*xabs = 130676
B
w7651
26136 >= 5*xabs
5*xabs = 26136
A
w7652
130688 >= 25*xabs
25*xabs = 130688
B
w7653
130693 >= 25*xabs
25*xabs = 130693
A
w7654
130701 >= 25*xabs
25*xabs = 130701
B
w7655
26141 >= 5*xabs
5*xabs = 26141
A
w7656
130713 >= 25*xabs
25*xabs = 130713
B
w7657
130766 >= 25*xabs
25*xabs = 130766
A
w7658
130774 >= 25*xabs
25*xabs = 130774
B
w7659
130778 >= 25*xabs
25*xabs = 130778
A
w7660
130786 >= 25*xabs
25*xabs = 130786
B

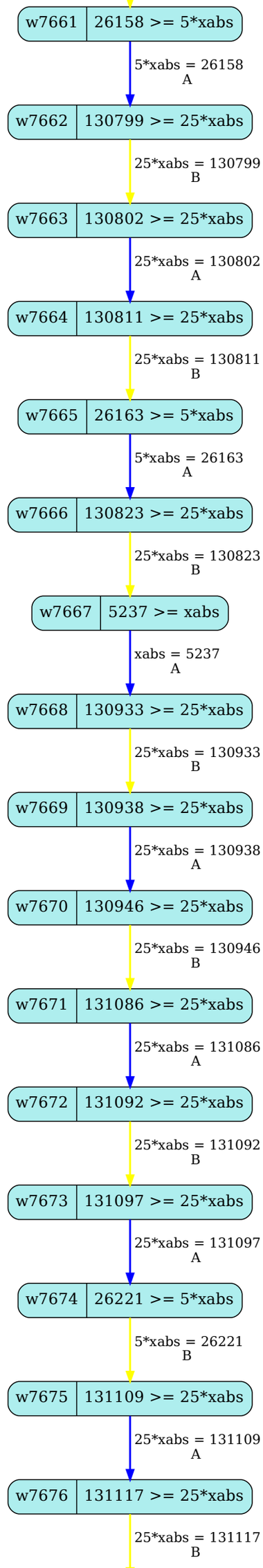
w7661
26158 >= 5*xabs
5*xabs = 26158
A
w7662
130799 >= 25*xabs
25*xabs = 130799
B
w7663
130802 >= 25*xabs
25*xabs = 130802
A
w7664
130811 >= 25*xabs
25*xabs = 130811
B
w7665
26163 >= 5*xabs
5*xabs = 26163
A
w7666
130823 >= 25*xabs
25*xabs = 130823
B
w7667
5237 >= xabs
xabs = 5237
A
w7668
130933 >= 25*xabs
25*xabs = 130933
B
w7669
130938 >= 25*xabs
25*xabs = 130938
A
w7670
130946 >= 25*xabs
25*xabs = 130946
B
w7671
131086 >= 25*xabs
25*xabs = 131086
A
w7672
131092 >= 25*xabs
25*xabs = 131092
B
w7673
131097 >= 25*xabs
25*xabs = 131097
A
w7674
26221 >= 5*xabs
5*xabs = 26221
B
w7675
131109 >= 25*xabs
25*xabs = 131109
A
w7676
131117 >= 25*xabs
25*xabs = 131117
B

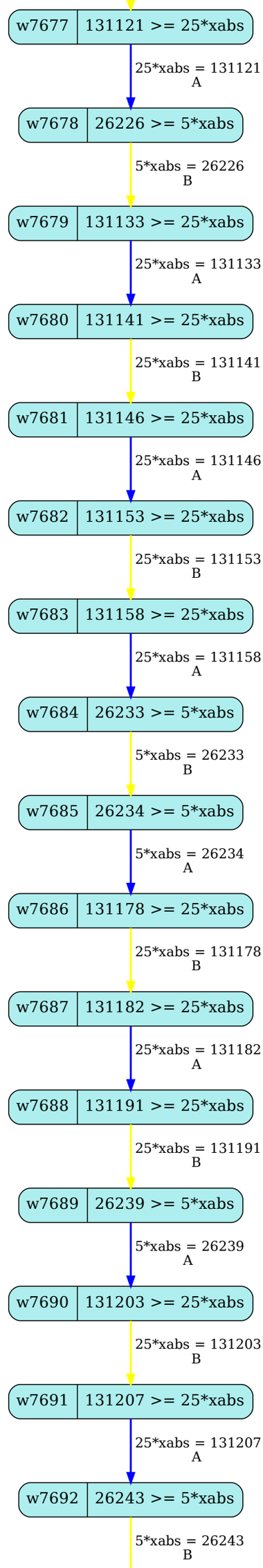
w7677
131121 >= 25*xabs
25*xabs = 131121
A
w7678
26226 >= 5*xabs
5*xabs = 26226
B
w7679
131133 >= 25*xabs
25*xabs = 131133
A
w7680
131141 >= 25*xabs
25*xabs = 131141
B
w7681
131146 >= 25*xabs
25*xabs = 131146
A
w7682
131153 >= 25*xabs
25*xabs = 131153
B
w7683
131158 >= 25*xabs
25*xabs = 131158
A
w7684
26233 >= 5*xabs
5*xabs = 26233
B
w7685
26234 >= 5*xabs
5*xabs = 26234
A
w7686
131178 >= 25*xabs
25*xabs = 131178
B
w7687
131182 >= 25*xabs
25*xabs = 131182
A
w7688
131191 >= 25*xabs
25*xabs = 131191
B
w7689
26239 >= 5*xabs
5*xabs = 26239
A
w7690
131203 >= 25*xabs
25*xabs = 131203
B
w7691
131207 >= 25*xabs
25*xabs = 131207
A
w7692
26243 >= 5*xabs
5*xabs = 26243
B

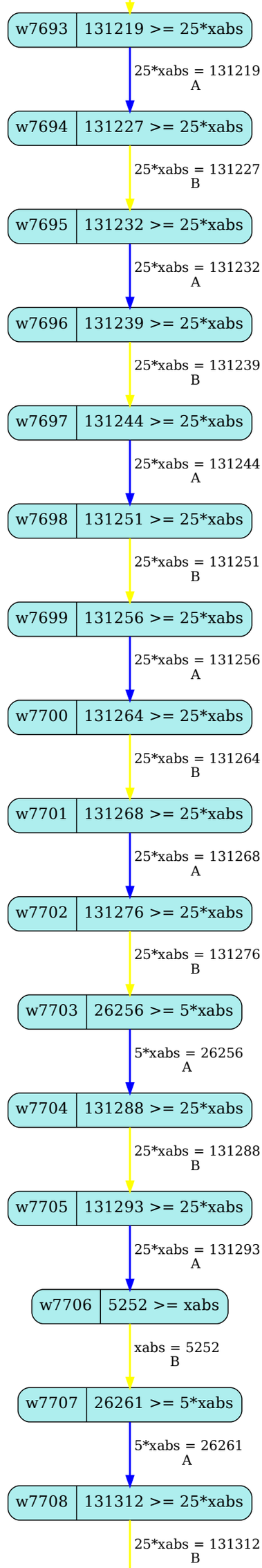
w7693
131219 >= 25*xabs
25*xabs = 131219
A
w7694
131227 >= 25*xabs
25*xabs = 131227
B
w7695
131232 >= 25*xabs
25*xabs = 131232
A
w7696
131239 >= 25*xabs
25*xabs = 131239
B
w7697
131244 >= 25*xabs
25*xabs = 131244
A
w7698
131251 >= 25*xabs
25*xabs = 131251
B
w7699
131256 >= 25*xabs
25*xabs = 131256
A
w7700
131264 >= 25*xabs
25*xabs = 131264
B
w7701
131268 >= 25*xabs
25*xabs = 131268
A
w7702
131276 >= 25*xabs
25*xabs = 131276
B
w7703
26256 >= 5*xabs
5*xabs = 26256
A
w7704
131288 >= 25*xabs
25*xabs = 131288
B
w7705
131293 >= 25*xabs
25*xabs = 131293
A
w7706
5252 >= xabs
xabs = 5252
B
w7707
26261 >= 5*xabs
5*xabs = 26261
A
w7708
131312 >= 25*xabs
25*xabs = 131312
B

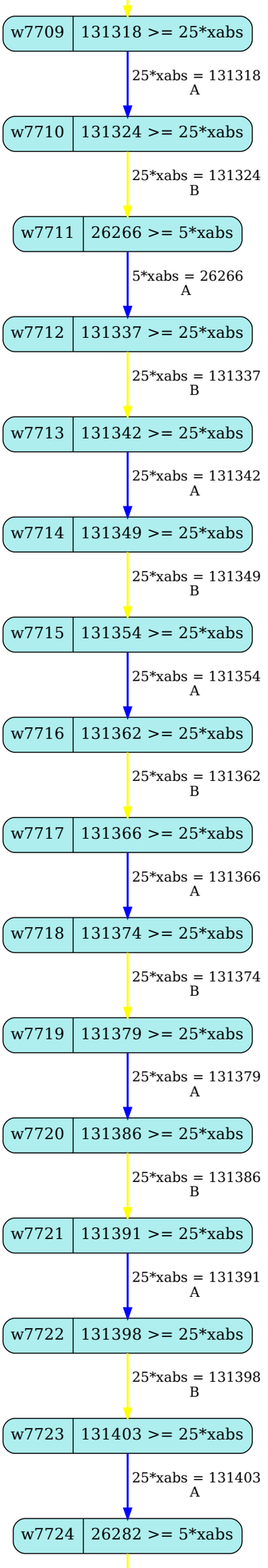
w7709
131318 >= 25*xabs
25*xabs = 131318
A
w7710
131324 >= 25*xabs
25*xabs = 131324
B
w7711
26266 >= 5*xabs
5*xabs = 26266
A
w7712
131337 >= 25*xabs
25*xabs = 131337
B
w7713
131342 >= 25*xabs
25*xabs = 131342
A
w7714
131349 >= 25*xabs
25*xabs = 131349
B
w7715
131354 >= 25*xabs
25*xabs = 131354
A
w7716
131362 >= 25*xabs
25*xabs = 131362
B
w7717
131366 >= 25*xabs
25*xabs = 131366
A
w7718
131374 >= 25*xabs
25*xabs = 131374
B
w7719
131379 >= 25*xabs
25*xabs = 131379
A
w7720
131386 >= 25*xabs
25*xabs = 131386
B
w7721
131391 >= 25*xabs
25*xabs = 131391
A
w7722
131398 >= 25*xabs
25*xabs = 131398
B
w7723
131403 >= 25*xabs
25*xabs = 131403
A
w7724
26282 >= 5*xabs

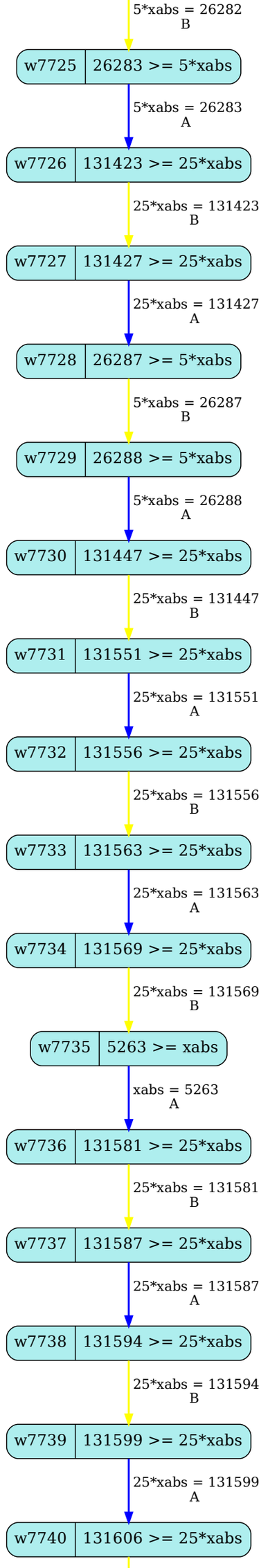
5*xabs = 26282
B
w7725
26283 >= 5*xabs
5*xabs = 26283
A
w7726
131423 >= 25*xabs
25*xabs = 131423
B
w7727
131427 >= 25*xabs
25*xabs = 131427
A
w7728
26287 >= 5*xabs
5*xabs = 26287
B
w7729
26288 >= 5*xabs
5*xabs = 26288
A
w7730
131447 >= 25*xabs
25*xabs = 131447
B
w7731
131551 >= 25*xabs
25*xabs = 131551
A
w7732
131556 >= 25*xabs
25*xabs = 131556
B
w7733
131563 >= 25*xabs
25*xabs = 131563
A
w7734
131569 >= 25*xabs
25*xabs = 131569
B
w7735
5263 >= xabs
xabs = 5263
A
w7736
131581 >= 25*xabs
25*xabs = 131581
B
w7737
131587 >= 25*xabs
25*xabs = 131587
A
w7738
131594 >= 25*xabs
25*xabs = 131594
B
w7739
131599 >= 25*xabs
25*xabs = 131599
A
w7740
131606 >= 25*xabs

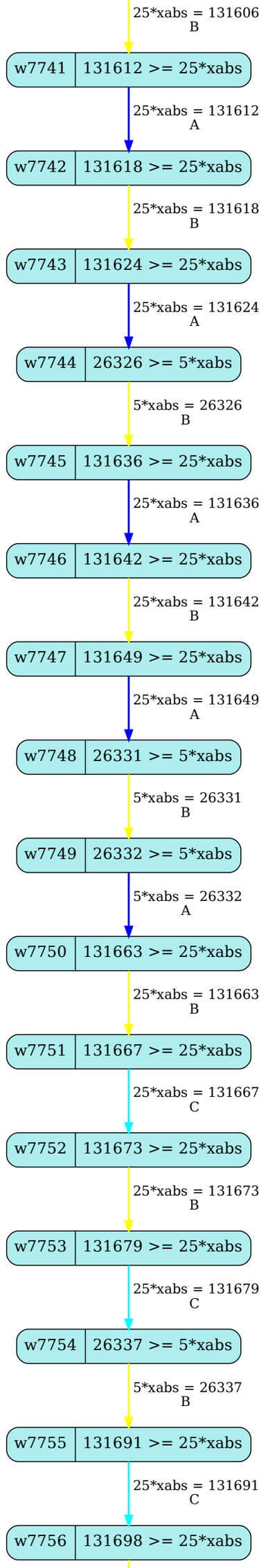
25*xabs = 131606
B
w7741
131612 >= 25*xabs
25*xabs = 131612
A
w7742
131618 >= 25*xabs
25*xabs = 131618
B
w7743
131624 >= 25*xabs
25*xabs = 131624
A
w7744
26326 >= 5*xabs
5*xabs = 26326
B
w7745
131636 >= 25*xabs
25*xabs = 131636
A
w7746
131642 >= 25*xabs
25*xabs = 131642
B
w7747
131649 >= 25*xabs
25*xabs = 131649
A
w7748
26331 >= 5*xabs
5*xabs = 26331
B
w7749
26332 >= 5*xabs
5*xabs = 26332
A
w7750
131663 >= 25*xabs
25*xabs = 131663
B
w7751
131667 >= 25*xabs
25*xabs = 131667
C
w7752
131673 >= 25*xabs
25*xabs = 131673
B
w7753
131679 >= 25*xabs
25*xabs = 131679
C
w7754
26337 >= 5*xabs
5*xabs = 26337
B
w7755
131691 >= 25*xabs
25*xabs = 131691
C
w7756
131698 >= 25*xabs

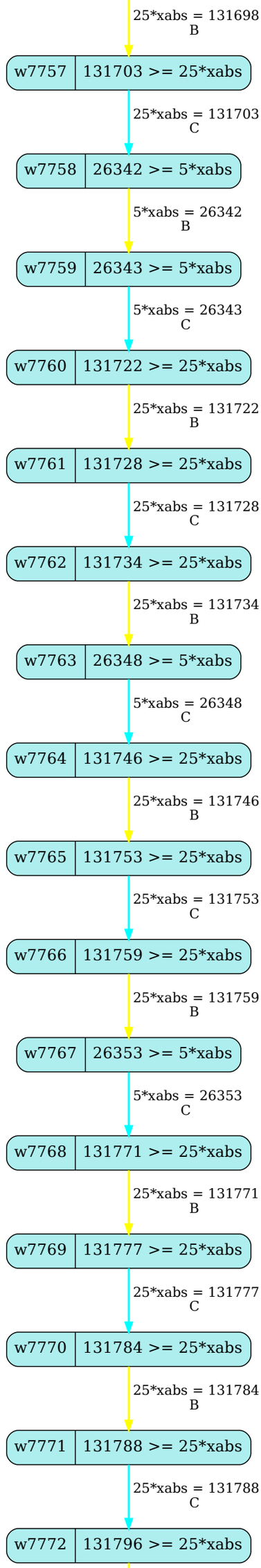
25*xabs = 131698
B
w7757
131703 >= 25*xabs
25*xabs = 131703
C
w7758
26342 >= 5*xabs
5*xabs = 26342
B
w7759
26343 >= 5*xabs
5*xabs = 26343
C
w7760
131722 >= 25*xabs
25*xabs = 131722
B
w7761
131728 >= 25*xabs
25*xabs = 131728
C
w7762
131734 >= 25*xabs
25*xabs = 131734
B
w7763
26348 >= 5*xabs
5*xabs = 26348
C
w7764
131746 >= 25*xabs
25*xabs = 131746
B
w7765
131753 >= 25*xabs
25*xabs = 131753
C
w7766
131759 >= 25*xabs
25*xabs = 131759
B
w7767
26353 >= 5*xabs
5*xabs = 26353
C
w7768
131771 >= 25*xabs
25*xabs = 131771
B
w7769
131777 >= 25*xabs
25*xabs = 131777
C
w7770
131784 >= 25*xabs
25*xabs = 131784
B
w7771
131788 >= 25*xabs
25*xabs = 131788
C
w7772
131796 >= 25*xabs

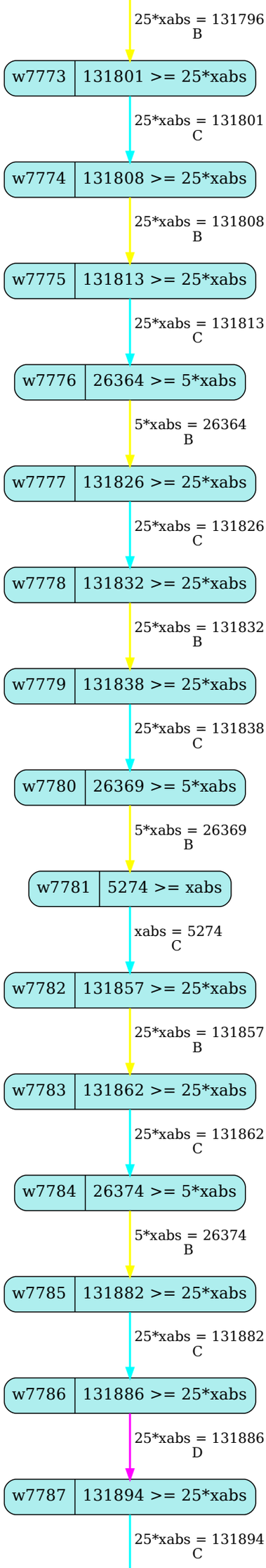
25*xabs = 131796
B
w7773
131801 >= 25*xabs
25*xabs = 131801
C
w7774
131808 >= 25*xabs
25*xabs = 131808
B
w7775
131813 >= 25*xabs
25*xabs = 131813
C
w7776
26364 >= 5*xabs
5*xabs = 26364
B
w7777
131826 >= 25*xabs
25*xabs = 131826
C
w7778
131832 >= 25*xabs
25*xabs = 131832
B
w7779
131838 >= 25*xabs
25*xabs = 131838
C
w7780
26369 >= 5*xabs
5*xabs = 26369
B
w7781
5274 >= xabs
xabs = 5274
C
w7782
131857 >= 25*xabs
25*xabs = 131857
B
w7783
131862 >= 25*xabs
25*xabs = 131862
C
w7784
26374 >= 5*xabs
5*xabs = 26374
B
w7785
131882 >= 25*xabs
25*xabs = 131882
C
w7786
131886 >= 25*xabs
25*xabs = 131886
D
w7787
131894 >= 25*xabs
25*xabs = 131894
C

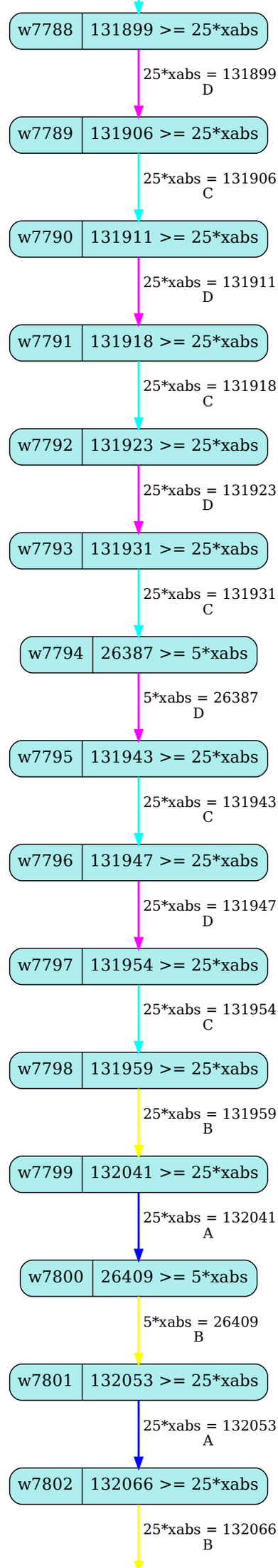
w7788
131899 >= 25*xabs
25*xabs = 131899
D
w7789
131906 >= 25*xabs
25*xabs = 131906
C
w7790
131911 >= 25*xabs
25*xabs = 131911
D
w7791
131918 >= 25*xabs
25*xabs = 131918
C
w7792
131923 >= 25*xabs
25*xabs = 131923
D
w7793
131931 >= 25*xabs
25*xabs = 131931
C
w7794
26387 >= 5*xabs
5*xabs = 26387
D
w7795
131943 >= 25*xabs
25*xabs = 131943
C
w7796
131947 >= 25*xabs
25*xabs = 131947
D
w7797
131954 >= 25*xabs
25*xabs = 131954
C
w7798
131959 >= 25*xabs
25*xabs = 131959
B
w7799
132041 >= 25*xabs
25*xabs = 132041
A
w7800
26409 >= 5*xabs
5*xabs = 26409
B
w7801
132053 >= 25*xabs
25*xabs = 132053
A
w7802
132066 >= 25*xabs
25*xabs = 132066
B

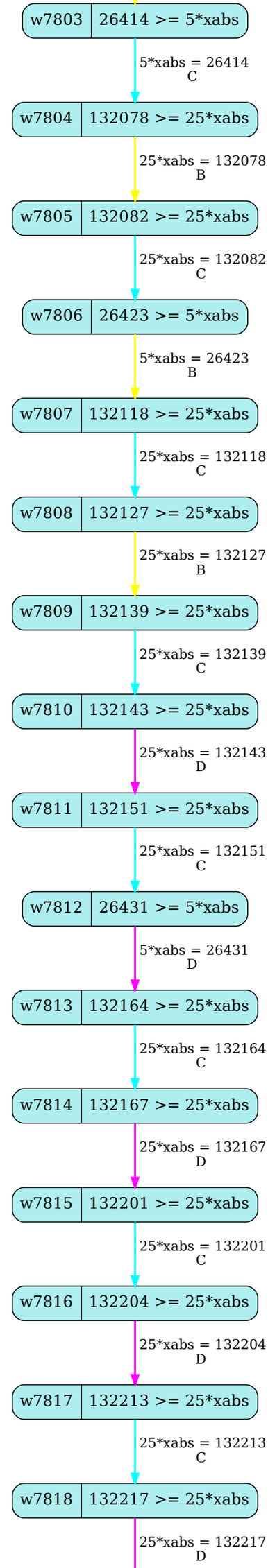
w7803
26414 >= 5*xabs
5*xabs = 26414
C
w7804
132078 >= 25*xabs
25*xabs = 132078
B
w7805
132082 >= 25*xabs
25*xabs = 132082
C
w7806
26423 >= 5*xabs
5*xabs = 26423
B
w7807
132118 >= 25*xabs
25*xabs = 132118
C
w7808
132127 >= 25*xabs
25*xabs = 132127
B
w7809
132139 >= 25*xabs
25*xabs = 132139
C
w7810
132143 >= 25*xabs
25*xabs = 132143
D
w7811
132151 >= 25*xabs
25*xabs = 132151
C
w7812
26431 >= 5*xabs
5*xabs = 26431
D
w7813
132164 >= 25*xabs
25*xabs = 132164
C
w7814
132167 >= 25*xabs
25*xabs = 132167
D
w7815
132201 >= 25*xabs
25*xabs = 132201
C
w7816
132204 >= 25*xabs
25*xabs = 132204
D
w7817
132213 >= 25*xabs
25*xabs = 132213
C
w7818
132217 >= 25*xabs
25*xabs = 132217
D

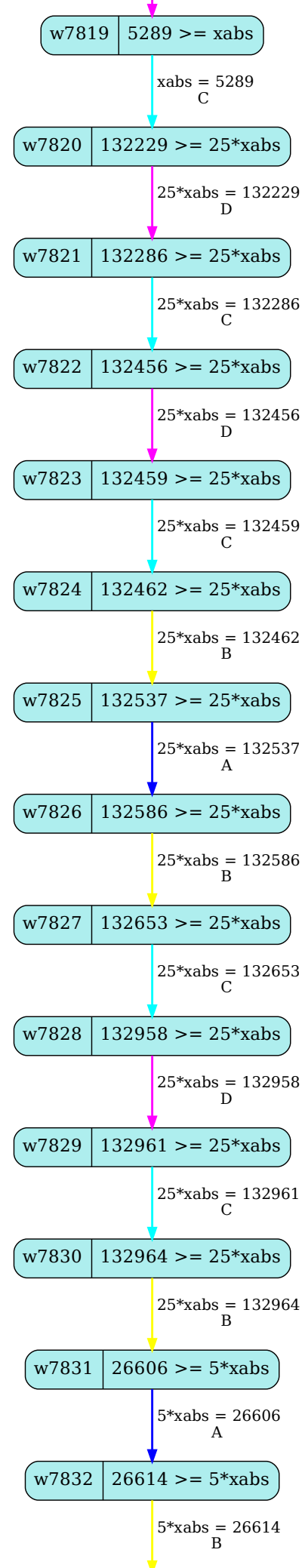
w7819
5289 >= xabs
xabs = 5289
C
w7820
132229 >= 25*xabs
25*xabs = 132229
D
w7821
132286 >= 25*xabs
25*xabs = 132286
C
w7822
132456 >= 25*xabs
25*xabs = 132456
D
w7823
132459 >= 25*xabs
25*xabs = 132459
C
w7824
132462 >= 25*xabs
25*xabs = 132462
B
w7825
132537 >= 25*xabs
25*xabs = 132537
A
w7826
132586 >= 25*xabs
25*xabs = 132586
B
w7827
132653 >= 25*xabs
25*xabs = 132653
C
w7828
132958 >= 25*xabs
25*xabs = 132958
D
w7829
132961 >= 25*xabs
25*xabs = 132961
C
w7830
132964 >= 25*xabs
25*xabs = 132964
B
w7831
26606 >= 5*xabs
5*xabs = 26606
A
w7832
26614 >= 5*xabs
5*xabs = 26614
B

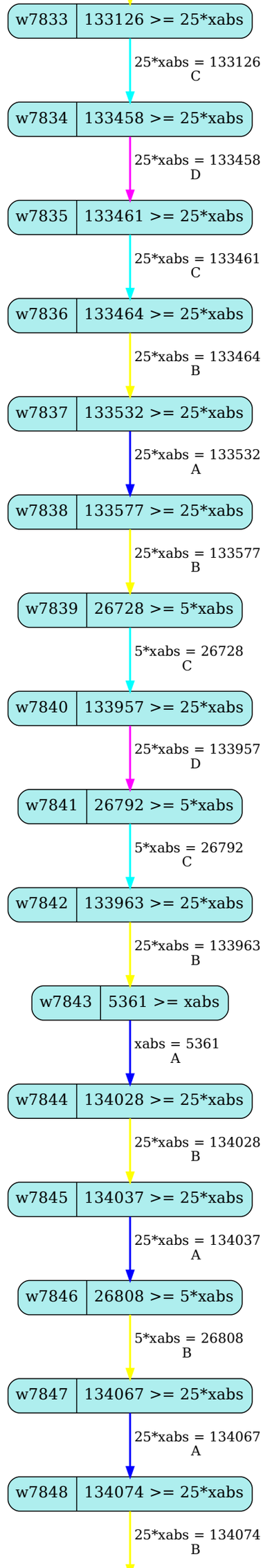
w7833
133126 >= 25*xabs
25*xabs = 133126
C
w7834
133458 >= 25*xabs
25*xabs = 133458
D
w7835
133461 >= 25*xabs
25*xabs = 133461
C
w7836
133464 >= 25*xabs
25*xabs = 133464
B
w7837
133532 >= 25*xabs
25*xabs = 133532
A
w7838
133577 >= 25*xabs
25*xabs = 133577
B
w7839
26728 >= 5*xabs
5*xabs = 26728
C
w7840
133957 >= 25*xabs
25*xabs = 133957
D
w7841
26792 >= 5*xabs
5*xabs = 26792
C
w7842
133963 >= 25*xabs
25*xabs = 133963
B
w7843
5361 >= xabs
xabs = 5361
A
w7844
134028 >= 25*xabs
25*xabs = 134028
B
w7845
134037 >= 25*xabs
25*xabs = 134037
A
w7846
26808 >= 5*xabs
5*xabs = 26808
B
w7847
134067 >= 25*xabs
25*xabs = 134067
A
w7848
134074 >= 25*xabs
25*xabs = 134074
B

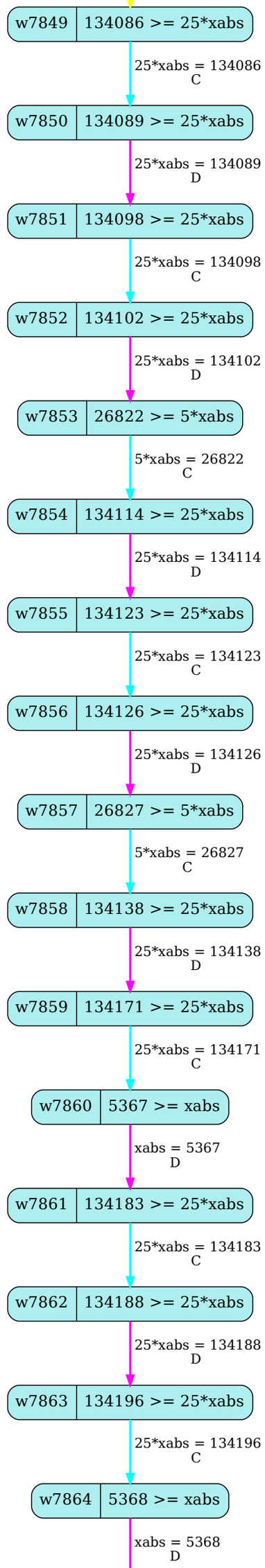
w7849
134086 >= 25*xabs
25*xabs = 134086
C
w7850
134089 >= 25*xabs
25*xabs = 134089
D
w7851
134098 >= 25*xabs
25*xabs = 134098
C
w7852
134102 >= 25*xabs
25*xabs = 134102
D
w7853
26822 >= 5*xabs
5*xabs = 26822
C
w7854
134114 >= 25*xabs
25*xabs = 134114
D
w7855
134123 >= 25*xabs
25*xabs = 134123
C
w7856
134126 >= 25*xabs
25*xabs = 134126
D
w7857
26827 >= 5*xabs
5*xabs = 26827
C
w7858
134138 >= 25*xabs
25*xabs = 134138
D
w7859
134171 >= 25*xabs
25*xabs = 134171
C
w7860
5367 >= xabs
xabs = 5367
D
w7861
134183 >= 25*xabs
25*xabs = 134183
C
w7862
134188 >= 25*xabs
25*xabs = 134188
D
w7863
134196 >= 25*xabs
25*xabs = 134196
C
w7864
5368 >= xabs
xabs = 5368
D

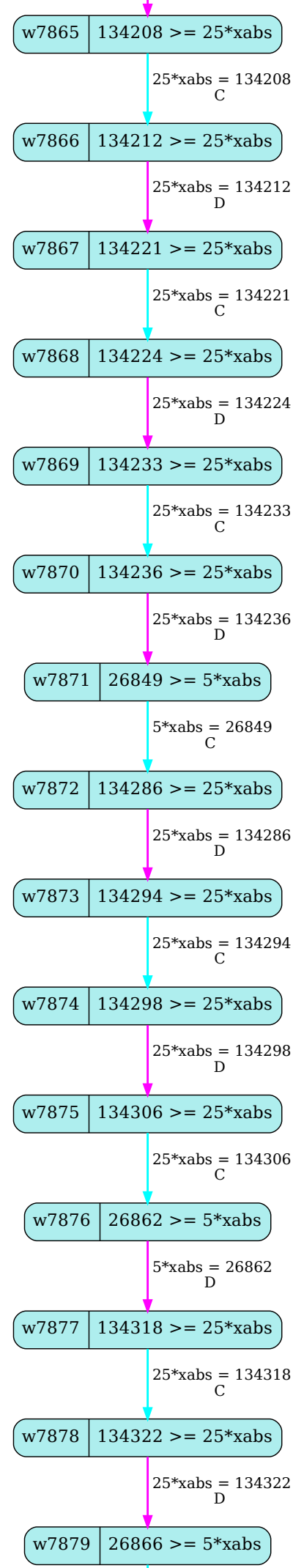
w7865
134208 >= 25*xabs
25*xabs = 134208
C
w7866
134212 >= 25*xabs
25*xabs = 134212
D
w7867
134221 >= 25*xabs
25*xabs = 134221
C
w7868
134224 >= 25*xabs
25*xabs = 134224
D
w7869
134233 >= 25*xabs
25*xabs = 134233
C
w7870
134236 >= 25*xabs
25*xabs = 134236
D
w7871
26849 >= 5*xabs
5*xabs = 26849
C
w7872
134286 >= 25*xabs
25*xabs = 134286
D
w7873
134294 >= 25*xabs
25*xabs = 134294
C
w7874
134298 >= 25*xabs
25*xabs = 134298
D
w7875
134306 >= 25*xabs
25*xabs = 134306
C
w7876
26862 >= 5*xabs
5*xabs = 26862
D
w7877
134318 >= 25*xabs
25*xabs = 134318
C
w7878
134322 >= 25*xabs
25*xabs = 134322
D
w7879
26866 >= 5*xabs

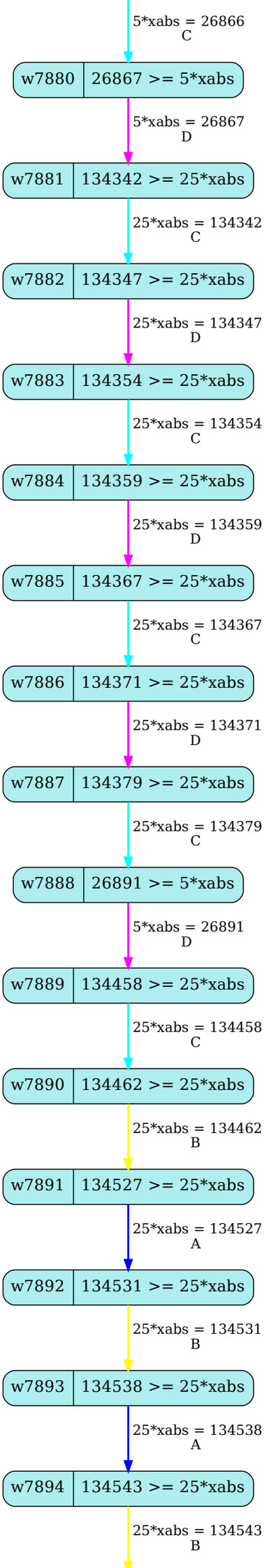
5*xabs = 26866
C
w7880
26867 >= 5*xabs
5*xabs = 26867
D
w7881
134342 >= 25*xabs
25*xabs = 134342
C
w7882
134347 >= 25*xabs
25*xabs = 134347
D
w7883
134354 >= 25*xabs
25*xabs = 134354
C
w7884
134359 >= 25*xabs
25*xabs = 134359
D
w7885
134367 >= 25*xabs
25*xabs = 134367
C
w7886
134371 >= 25*xabs
25*xabs = 134371
D
w7887
134379 >= 25*xabs
25*xabs = 134379
C
w7888
26891 >= 5*xabs
5*xabs = 26891
D
w7889
134458 >= 25*xabs
25*xabs = 134458
C
w7890
134462 >= 25*xabs
25*xabs = 134462
B
w7891
134527 >= 25*xabs
25*xabs = 134527
A
w7892
134531 >= 25*xabs
25*xabs = 134531
B
w7893
134538 >= 25*xabs
25*xabs = 134538
A
w7894
134543 >= 25*xabs
25*xabs = 134543
B

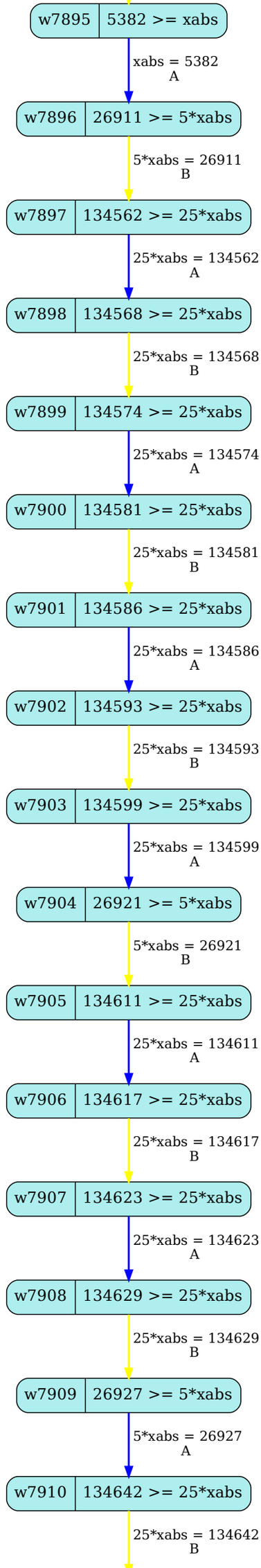
w7895
5382 >= xabs
xabs = 5382
A
w7896
26911 >= 5*xabs
5*xabs = 26911
B
w7897
134562 >= 25*xabs
25*xabs = 134562
A
w7898
134568 >= 25*xabs
25*xabs = 134568
B
w7899
134574 >= 25*xabs
25*xabs = 134574
A
w7900
134581 >= 25*xabs
25*xabs = 134581
B
w7901
134586 >= 25*xabs
25*xabs = 134586
A
w7902
134593 >= 25*xabs
25*xabs = 134593
B
w7903
134599 >= 25*xabs
25*xabs = 134599
A
w7904
26921 >= 5*xabs
5*xabs = 26921
B
w7905
134611 >= 25*xabs
25*xabs = 134611
A
w7906
134617 >= 25*xabs
25*xabs = 134617
B
w7907
134623 >= 25*xabs
25*xabs = 134623
A
w7908
134629 >= 25*xabs
25*xabs = 134629
B
w7909
26927 >= 5*xabs
5*xabs = 26927
A
w7910
134642 >= 25*xabs
25*xabs = 134642
B

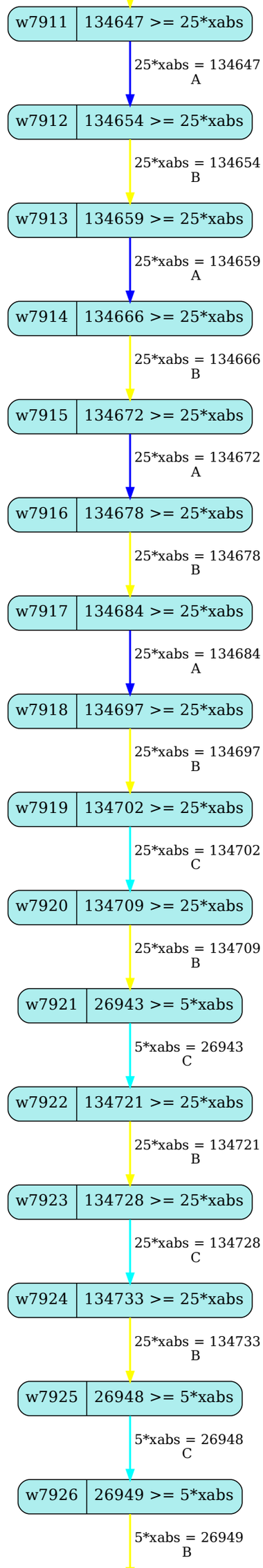
w7911
134647 >= 25*xabs
25*xabs = 134647
A
w7912
134654 >= 25*xabs
25*xabs = 134654
B
w7913
134659 >= 25*xabs
25*xabs = 134659
A
w7914
134666 >= 25*xabs
25*xabs = 134666
B
w7915
134672 >= 25*xabs
25*xabs = 134672
A
w7916
134678 >= 25*xabs
25*xabs = 134678
B
w7917
134684 >= 25*xabs
25*xabs = 134684
A
w7918
134697 >= 25*xabs
25*xabs = 134697
B
w7919
134702 >= 25*xabs
25*xabs = 134702
C
w7920
134709 >= 25*xabs
25*xabs = 134709
B
w7921
26943 >= 5*xabs
5*xabs = 26943
C
w7922
134721 >= 25*xabs
25*xabs = 134721
B
w7923
134728 >= 25*xabs
25*xabs = 134728
C
w7924
134733 >= 25*xabs
25*xabs = 134733
B
w7925
26948 >= 5*xabs
5*xabs = 26948
C
w7926
26949 >= 5*xabs
5*xabs = 26949
B

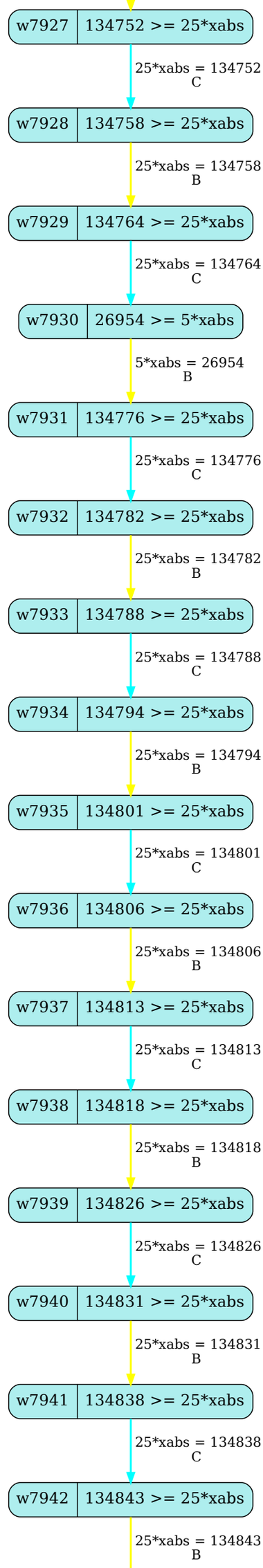
w7927
134752 >= 25*xabs
25*xabs = 134752
C
w7928
134758 >= 25*xabs
25*xabs = 134758
B
w7929
134764 >= 25*xabs
25*xabs = 134764
C
w7930
26954 >= 5*xabs
5*xabs = 26954
B
w7931
134776 >= 25*xabs
25*xabs = 134776
C
w7932
134782 >= 25*xabs
25*xabs = 134782
B
w7933
134788 >= 25*xabs
25*xabs = 134788
C
w7934
134794 >= 25*xabs
25*xabs = 134794
B
w7935
134801 >= 25*xabs
25*xabs = 134801
C
w7936
134806 >= 25*xabs
25*xabs = 134806
B
w7937
134813 >= 25*xabs
25*xabs = 134813
C
w7938
134818 >= 25*xabs
25*xabs = 134818
B
w7939
134826 >= 25*xabs
25*xabs = 134826
C
w7940
134831 >= 25*xabs
25*xabs = 134831
B
w7941
134838 >= 25*xabs
25*xabs = 134838
C
w7942
134843 >= 25*xabs
25*xabs = 134843
B

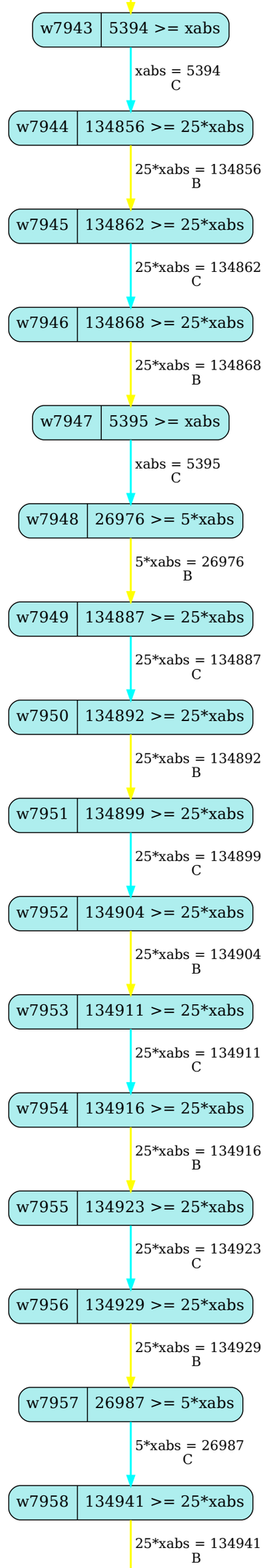
w7943
5394 >= xabs
xabs = 5394
C
w7944
134856 >= 25*xabs
25*xabs = 134856
B
w7945
134862 >= 25*xabs
25*xabs = 134862
C
w7946
134868 >= 25*xabs
25*xabs = 134868
B
w7947
5395 >= xabs
xabs = 5395
C
w7948
26976 >= 5*xabs
5*xabs = 26976
B
w7949
134887 >= 25*xabs
25*xabs = 134887
C
w7950
134892 >= 25*xabs
25*xabs = 134892
B
w7951
134899 >= 25*xabs
25*xabs = 134899
C
w7952
134904 >= 25*xabs
25*xabs = 134904
B
w7953
134911 >= 25*xabs
25*xabs = 134911
C
w7954
134916 >= 25*xabs
25*xabs = 134916
B
w7955
134923 >= 25*xabs
25*xabs = 134923
C
w7956
134929 >= 25*xabs
25*xabs = 134929
B
w7957
26987 >= 5*xabs
5*xabs = 26987
C
w7958
134941 >= 25*xabs
25*xabs = 134941
B

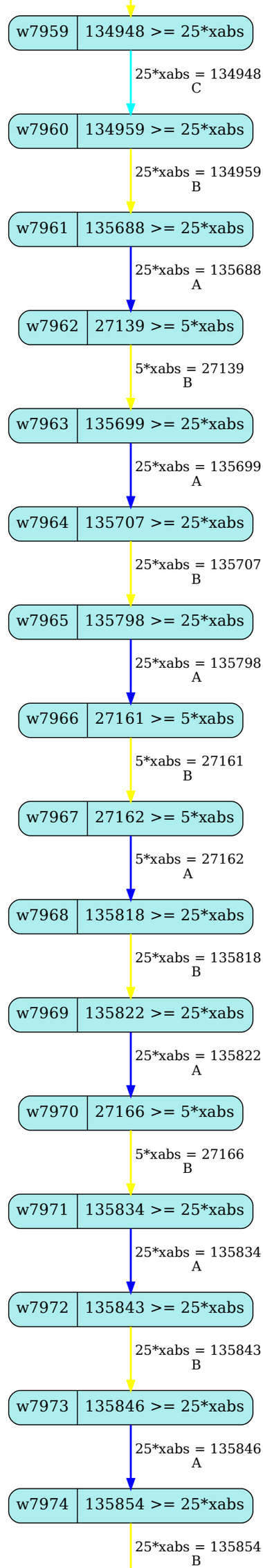
w7959
134948 >= 25*xabs
25*xabs = 134948
C
w7960
134959 >= 25*xabs
25*xabs = 134959
B
w7961
135688 >= 25*xabs
25*xabs = 135688
A
w7962
27139 >= 5*xabs
5*xabs = 27139
B
w7963
135699 >= 25*xabs
25*xabs = 135699
A
w7964
135707 >= 25*xabs
25*xabs = 135707
B
w7965
135798 >= 25*xabs
25*xabs = 135798
A
w7966
27161 >= 5*xabs
5*xabs = 27161
B
w7967
27162 >= 5*xabs
5*xabs = 27162
A
w7968
135818 >= 25*xabs
25*xabs = 135818
B
w7969
135822 >= 25*xabs
25*xabs = 135822
A
w7970
27166 >= 5*xabs
5*xabs = 27166
B
w7971
135834 >= 25*xabs
25*xabs = 135834
A
w7972
135843 >= 25*xabs
25*xabs = 135843
B
w7973
135846 >= 25*xabs
25*xabs = 135846
A
w7974
135854 >= 25*xabs
25*xabs = 135854
B

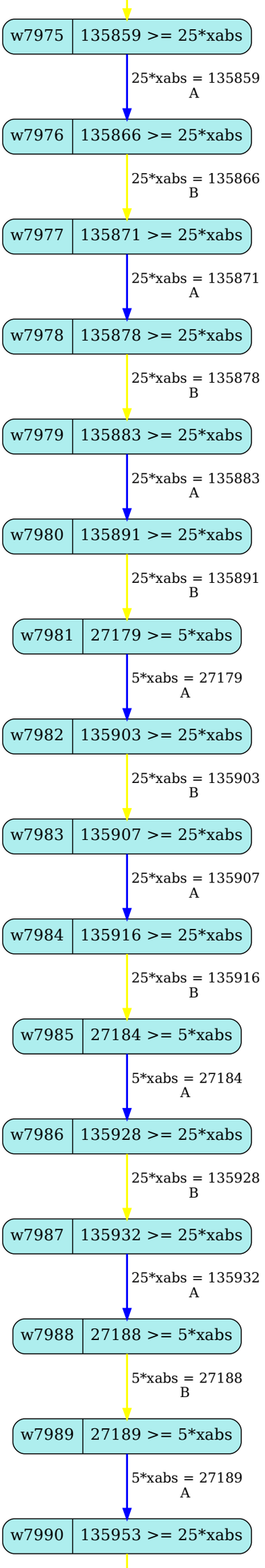
w7975
135859 >= 25*xabs
25*xabs = 135859
A
w7976
135866 >= 25*xabs
25*xabs = 135866
B
w7977
135871 >= 25*xabs
25*xabs = 135871
A
w7978
135878 >= 25*xabs
25*xabs = 135878
B
w7979
135883 >= 25*xabs
25*xabs = 135883
A
w7980
135891 >= 25*xabs
25*xabs = 135891
B
w7981
27179 >= 5*xabs
5*xabs = 27179
A
w7982
135903 >= 25*xabs
25*xabs = 135903
B
w7983
135907 >= 25*xabs
25*xabs = 135907
A
w7984
135916 >= 25*xabs
25*xabs = 135916
B
w7985
27184 >= 5*xabs
5*xabs = 27184
A
w7986
135928 >= 25*xabs
25*xabs = 135928
B
w7987
135932 >= 25*xabs
25*xabs = 135932
A
w7988
27188 >= 5*xabs
5*xabs = 27188
B
w7989
27189 >= 5*xabs
5*xabs = 27189
A
w7990
135953 >= 25*xabs

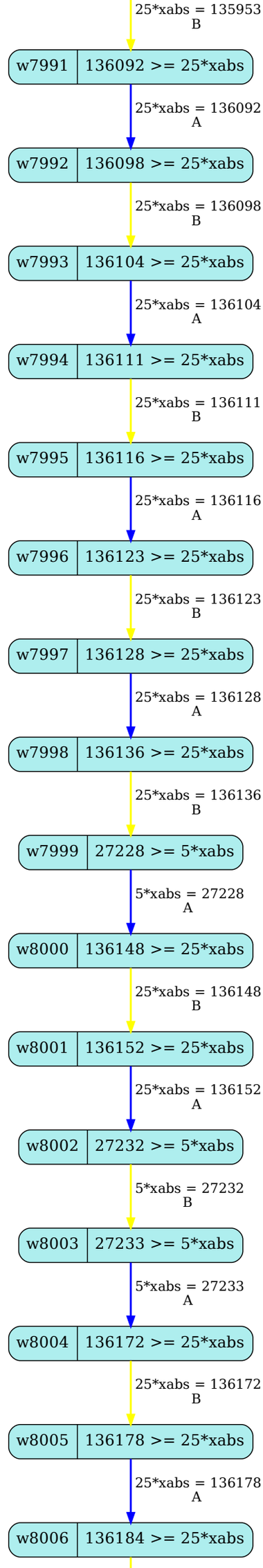
25*xabs = 135953
B
w7991
136092 >= 25*xabs
25*xabs = 136092
A
w7992
136098 >= 25*xabs
25*xabs = 136098
B
w7993
136104 >= 25*xabs
25*xabs = 136104
A
w7994
136111 >= 25*xabs
25*xabs = 136111
B
w7995
136116 >= 25*xabs
25*xabs = 136116
A
w7996
136123 >= 25*xabs
25*xabs = 136123
B
w7997
136128 >= 25*xabs
25*xabs = 136128
A
w7998
136136 >= 25*xabs
25*xabs = 136136
B
w7999
27228 >= 5*xabs
5*xabs = 27228
A
w8000
136148 >= 25*xabs
25*xabs = 136148
B
w8001
136152 >= 25*xabs
25*xabs = 136152
A
w8002
27232 >= 5*xabs
5*xabs = 27232
B
w8003
27233 >= 5*xabs
5*xabs = 27233
A
w8004
136172 >= 25*xabs
25*xabs = 136172
B
w8005
136178 >= 25*xabs
25*xabs = 136178
A
w8006
136184 >= 25*xabs

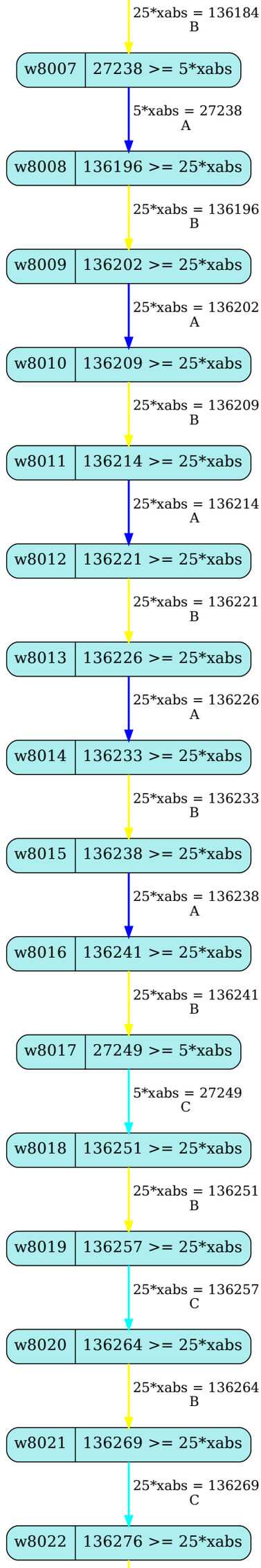
25*xabs = 136184
B
w8007
27238 >= 5*xabs
5*xabs = 27238
A
w8008
136196 >= 25*xabs
25*xabs = 136196
B
w8009
136202 >= 25*xabs
25*xabs = 136202
A
w8010
136209 >= 25*xabs
25*xabs = 136209
B
w8011
136214 >= 25*xabs
25*xabs = 136214
A
w8012
136221 >= 25*xabs
25*xabs = 136221
B
w8013
136226 >= 25*xabs
25*xabs = 136226
A
w8014
136233 >= 25*xabs
25*xabs = 136233
B
w8015
136238 >= 25*xabs
25*xabs = 136238
A
w8016
136241 >= 25*xabs
25*xabs = 136241
B
w8017
27249 >= 5*xabs
5*xabs = 27249
C
w8018
136251 >= 25*xabs
25*xabs = 136251
B
w8019
136257 >= 25*xabs
25*xabs = 136257
C
w8020
136264 >= 25*xabs
25*xabs = 136264
B
w8021
136269 >= 25*xabs
25*xabs = 136269
C
w8022
136276 >= 25*xabs

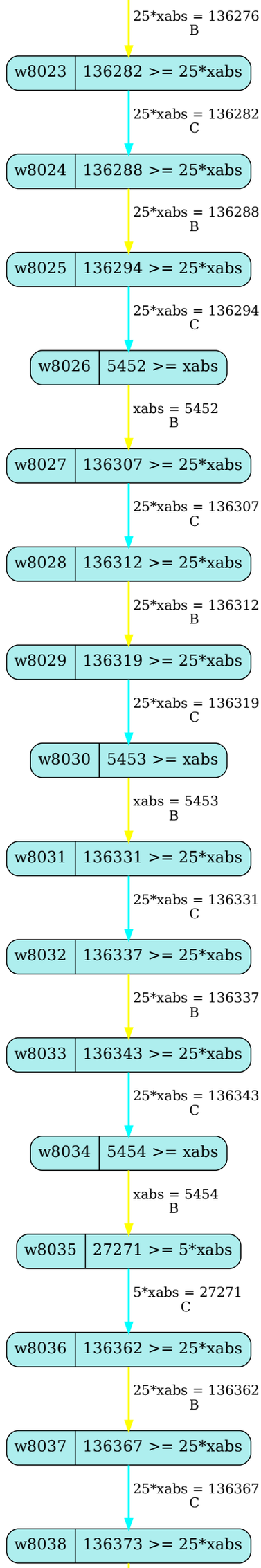
25*xabs = 136276
B
w8023
136282 >= 25*xabs
25*xabs = 136282
C
w8024
136288 >= 25*xabs
25*xabs = 136288
B
w8025
136294 >= 25*xabs
25*xabs = 136294
C
w8026
5452 >= xabs
xabs = 5452
B
w8027
136307 >= 25*xabs
25*xabs = 136307
C
w8028
136312 >= 25*xabs
25*xabs = 136312
B
w8029
136319 >= 25*xabs
25*xabs = 136319
C
w8030
5453 >= xabs
xabs = 5453
B
w8031
136331 >= 25*xabs
25*xabs = 136331
C
w8032
136337 >= 25*xabs
25*xabs = 136337
B
w8033
136343 >= 25*xabs
25*xabs = 136343
C
w8034
5454 >= xabs
xabs = 5454
B
w8035
27271 >= 5*xabs
5*xabs = 27271
C
w8036
136362 >= 25*xabs
25*xabs = 136362
B
w8037
136367 >= 25*xabs
25*xabs = 136367
C
w8038
136373 >= 25*xabs

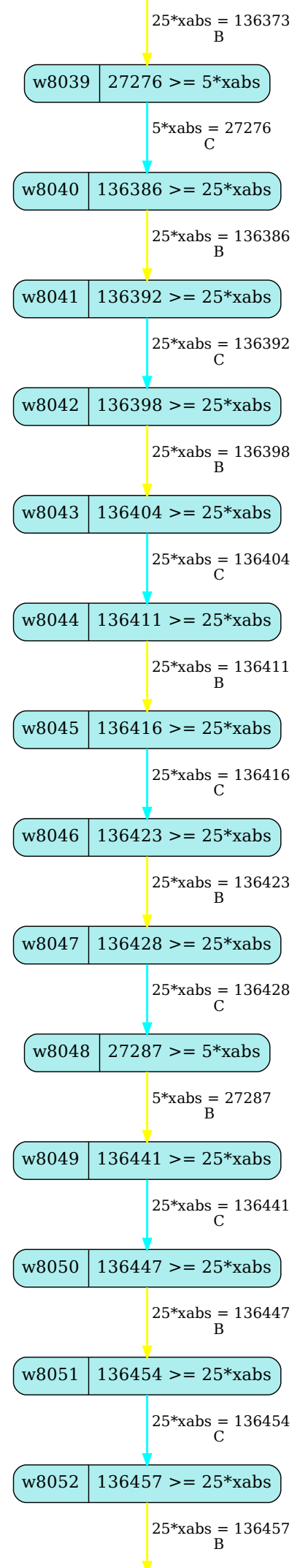
25*xabs = 136373
B
w8039
27276 >= 5*xabs
5*xabs = 27276
C
w8040
136386 >= 25*xabs
25*xabs = 136386
B
w8041
136392 >= 25*xabs
25*xabs = 136392
C
w8042
136398 >= 25*xabs
25*xabs = 136398
B
w8043
136404 >= 25*xabs
25*xabs = 136404
C
w8044
136411 >= 25*xabs
25*xabs = 136411
B
w8045
136416 >= 25*xabs
25*xabs = 136416
C
w8046
136423 >= 25*xabs
25*xabs = 136423
B
w8047
136428 >= 25*xabs
25*xabs = 136428
C
w8048
27287 >= 5*xabs
5*xabs = 27287
B
w8049
136441 >= 25*xabs
25*xabs = 136441
C
w8050
136447 >= 25*xabs
25*xabs = 136447
B
w8051
136454 >= 25*xabs
25*xabs = 136454
C
w8052
136457 >= 25*xabs
25*xabs = 136457
B

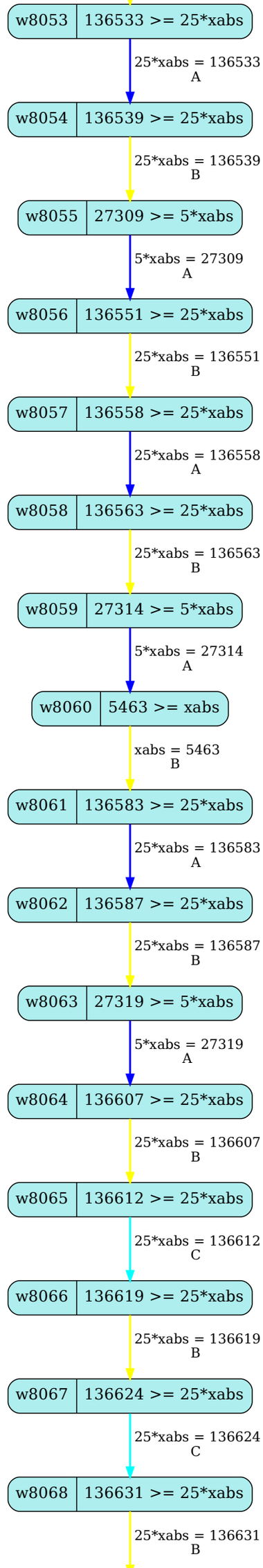
w8053
136533 >= 25*xabs
25*xabs = 136533
A
w8054
136539 >= 25*xabs
25*xabs = 136539
B
w8055
27309 >= 5*xabs
5*xabs = 27309
A
w8056
136551 >= 25*xabs
25*xabs = 136551
B
w8057
136558 >= 25*xabs
25*xabs = 136558
A
w8058
136563 >= 25*xabs
25*xabs = 136563
B
w8059
27314 >= 5*xabs
5*xabs = 27314
A
w8060
5463 >= xabs
xabs = 5463
B
w8061
136583 >= 25*xabs
25*xabs = 136583
A
w8062
136587 >= 25*xabs
25*xabs = 136587
B
w8063
27319 >= 5*xabs
5*xabs = 27319
A
w8064
136607 >= 25*xabs
25*xabs = 136607
B
w8065
136612 >= 25*xabs
25*xabs = 136612
C
w8066
136619 >= 25*xabs
25*xabs = 136619
B
w8067
136624 >= 25*xabs
25*xabs = 136624
C
w8068
136631 >= 25*xabs
25*xabs = 136631
B

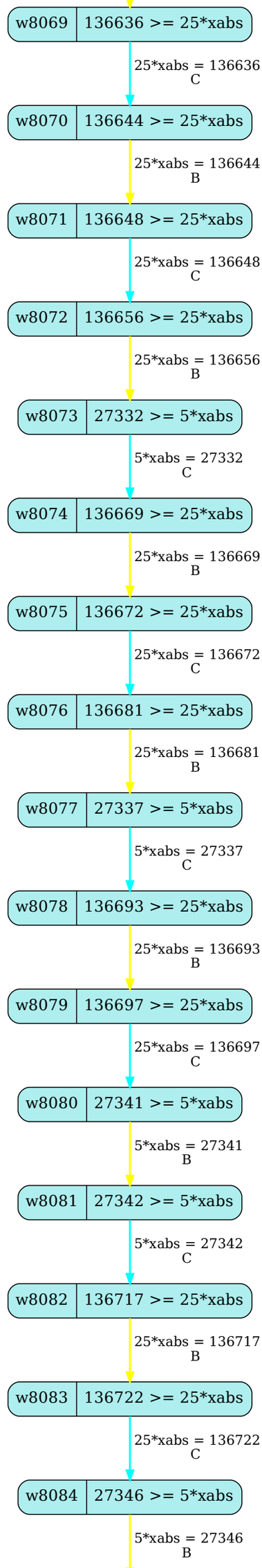
w8069
136636 >= 25*xabs
25*xabs = 136636
C
w8070
136644 >= 25*xabs
25*xabs = 136644
B
w8071
136648 >= 25*xabs
25*xabs = 136648
C
w8072
136656 >= 25*xabs
25*xabs = 136656
B
w8073
27332 >= 5*xabs
5*xabs = 27332
C
w8074
136669 >= 25*xabs
25*xabs = 136669
B
w8075
136672 >= 25*xabs
25*xabs = 136672
C
w8076
136681 >= 25*xabs
25*xabs = 136681
B
w8077
27337 >= 5*xabs
5*xabs = 27337
C
w8078
136693 >= 25*xabs
25*xabs = 136693
B
w8079
136697 >= 25*xabs
25*xabs = 136697
C
w8080
27341 >= 5*xabs
5*xabs = 27341
B
w8081
27342 >= 5*xabs
5*xabs = 27342
C
w8082
136717 >= 25*xabs
25*xabs = 136717
B
w8083
136722 >= 25*xabs
25*xabs = 136722
C
w8084
27346 >= 5*xabs
5*xabs = 27346
B

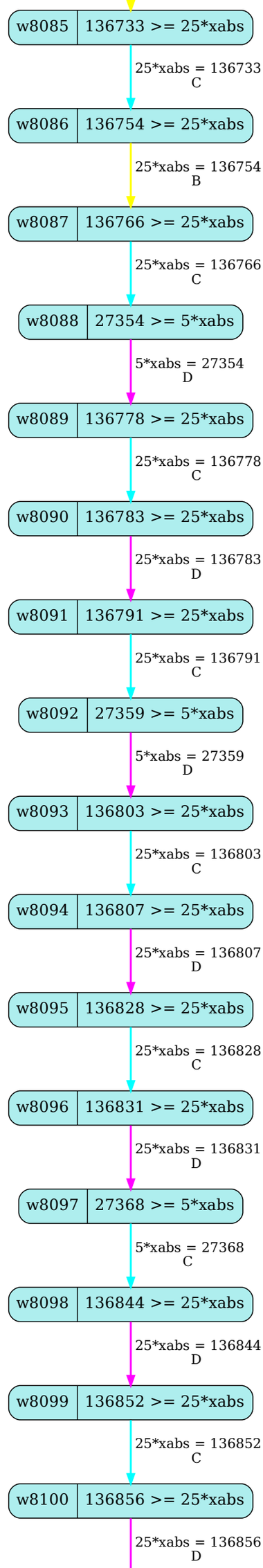
w8085
136733 >= 25*xabs
25*xabs = 136733
C
w8086
136754 >= 25*xabs
25*xabs = 136754
B
w8087
136766 >= 25*xabs
25*xabs = 136766
C
w8088
27354 >= 5*xabs
5*xabs = 27354
D
w8089
136778 >= 25*xabs
25*xabs = 136778
C
w8090
136783 >= 25*xabs
25*xabs = 136783
D
w8091
136791 >= 25*xabs
25*xabs = 136791
C
w8092
27359 >= 5*xabs
5*xabs = 27359
D
w8093
136803 >= 25*xabs
25*xabs = 136803
C
w8094
136807 >= 25*xabs
25*xabs = 136807
D
w8095
136828 >= 25*xabs
25*xabs = 136828
C
w8096
136831 >= 25*xabs
25*xabs = 136831
D
w8097
27368 >= 5*xabs
5*xabs = 27368
C
w8098
136844 >= 25*xabs
25*xabs = 136844
D
w8099
136852 >= 25*xabs
25*xabs = 136852
C
w8100
136856 >= 25*xabs
25*xabs = 136856
D

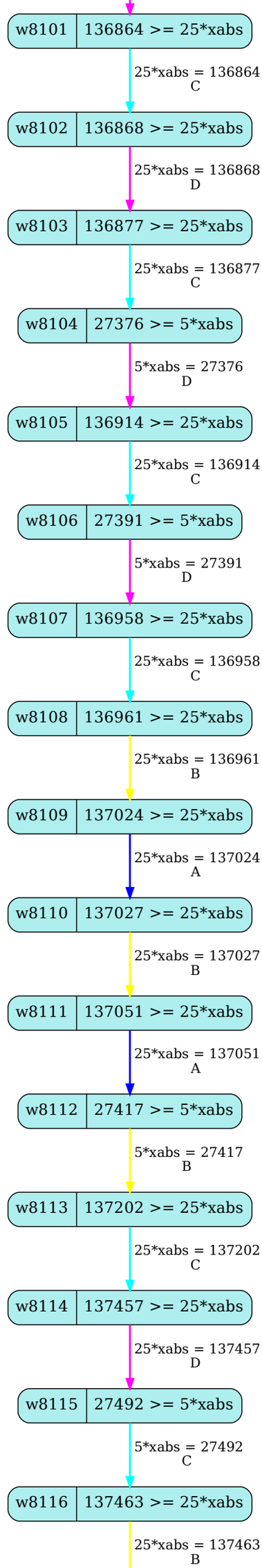
w8101
136864 >= 25*xabs
25*xabs = 136864
C
w8102
136868 >= 25*xabs
25*xabs = 136868
D
w8103
136877 >= 25*xabs
25*xabs = 136877
C
w8104
27376 >= 5*xabs
5*xabs = 27376
D
w8105
136914 >= 25*xabs
25*xabs = 136914
C
w8106
27391 >= 5*xabs
5*xabs = 27391
D
w8107
136958 >= 25*xabs
25*xabs = 136958
C
w8108
136961 >= 25*xabs
25*xabs = 136961
B
w8109
137024 >= 25*xabs
25*xabs = 137024
A
w8110
137027 >= 25*xabs
25*xabs = 137027
B
w8111
137051 >= 25*xabs
25*xabs = 137051
A
w8112
27417 >= 5*xabs
5*xabs = 27417
B
w8113
137202 >= 25*xabs
25*xabs = 137202
C
w8114
137457 >= 25*xabs
25*xabs = 137457
D
w8115
27492 >= 5*xabs
5*xabs = 27492
C
w8116
137463 >= 25*xabs
25*xabs = 137463
B

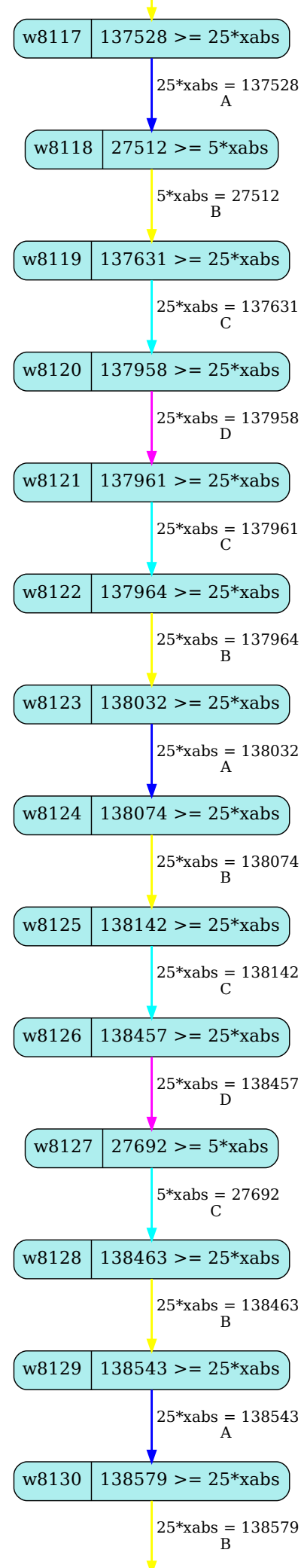
w8117
137528 >= 25*xabs
25*xabs = 137528
A
w8118
27512 >= 5*xabs
5*xabs = 27512
B
w8119
137631 >= 25*xabs
25*xabs = 137631
C
w8120
137958 >= 25*xabs
25*xabs = 137958
D
w8121
137961 >= 25*xabs
25*xabs = 137961
C
w8122
137964 >= 25*xabs
25*xabs = 137964
B
w8123
138032 >= 25*xabs
25*xabs = 138032
A
w8124
138074 >= 25*xabs
25*xabs = 138074
B
w8125
138142 >= 25*xabs
25*xabs = 138142
C
w8126
138457 >= 25*xabs
25*xabs = 138457
D
w8127
27692 >= 5*xabs
5*xabs = 27692
C
w8128
138463 >= 25*xabs
25*xabs = 138463
B
w8129
138543 >= 25*xabs
25*xabs = 138543
A
w8130
138579 >= 25*xabs
25*xabs = 138579
B

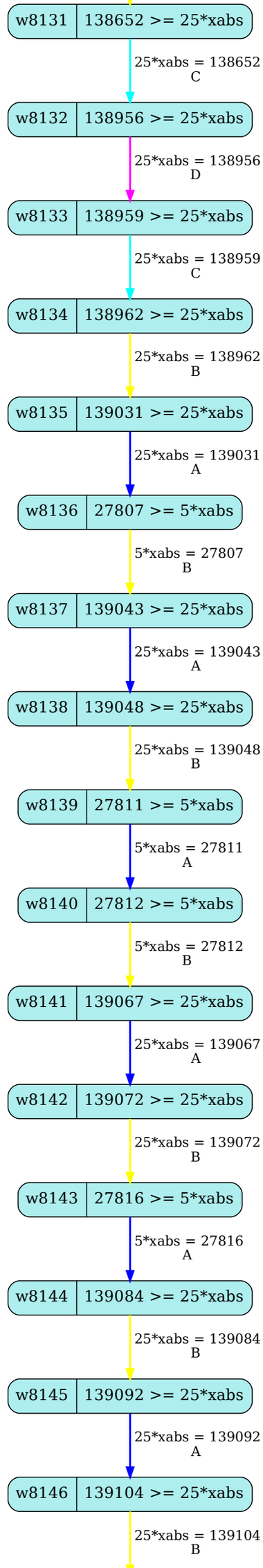
w8131
138652 >= 25*xabs
25*xabs = 138652
C
w8132
138956 >= 25*xabs
25*xabs = 138956
D
w8133
138959 >= 25*xabs
25*xabs = 138959
C
w8134
138962 >= 25*xabs
25*xabs = 138962
B
w8135
139031 >= 25*xabs
25*xabs = 139031
A
w8136
27807 >= 5*xabs
5*xabs = 27807
B
w8137
139043 >= 25*xabs
25*xabs = 139043
A
w8138
139048 >= 25*xabs
25*xabs = 139048
B
w8139
27811 >= 5*xabs
5*xabs = 27811
A
w8140
27812 >= 5*xabs
5*xabs = 27812
B
w8141
139067 >= 25*xabs
25*xabs = 139067
A
w8142
139072 >= 25*xabs
25*xabs = 139072
B
w8143
27816 >= 5*xabs
5*xabs = 27816
A
w8144
139084 >= 25*xabs
25*xabs = 139084
B
w8145
139092 >= 25*xabs
25*xabs = 139092
A
w8146
139104 >= 25*xabs
25*xabs = 139104
B

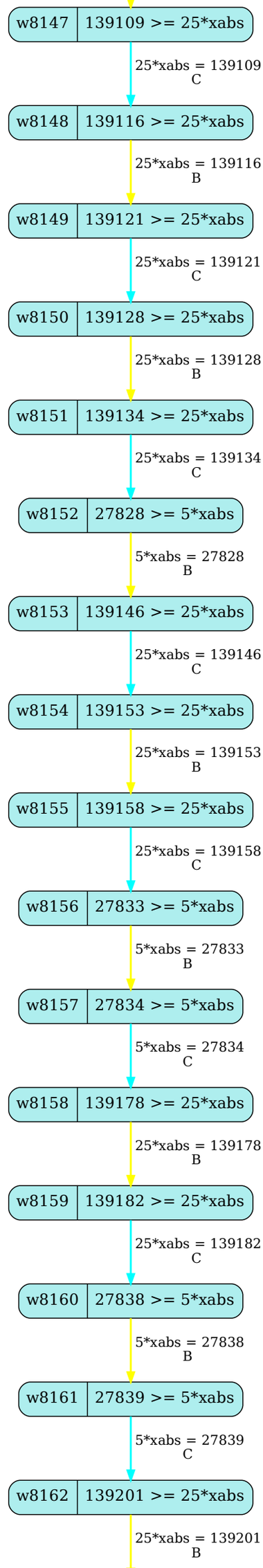
w8147
139109 >= 25*xabs
25*xabs = 139109
C
w8148
139116 >= 25*xabs
25*xabs = 139116
B
w8149
139121 >= 25*xabs
25*xabs = 139121
C
w8150
139128 >= 25*xabs
25*xabs = 139128
B
w8151
139134 >= 25*xabs
25*xabs = 139134
C
w8152
27828 >= 5*xabs
5*xabs = 27828
B
w8153
139146 >= 25*xabs
25*xabs = 139146
C
w8154
139153 >= 25*xabs
25*xabs = 139153
B
w8155
139158 >= 25*xabs
25*xabs = 139158
C
w8156
27833 >= 5*xabs
5*xabs = 27833
B
w8157
27834 >= 5*xabs
5*xabs = 27834
C
w8158
139178 >= 25*xabs
25*xabs = 139178
B
w8159
139182 >= 25*xabs
25*xabs = 139182
C
w8160
27838 >= 5*xabs
5*xabs = 27838
B
w8161
27839 >= 5*xabs
5*xabs = 27839
C
w8162
139201 >= 25*xabs
25*xabs = 139201
B

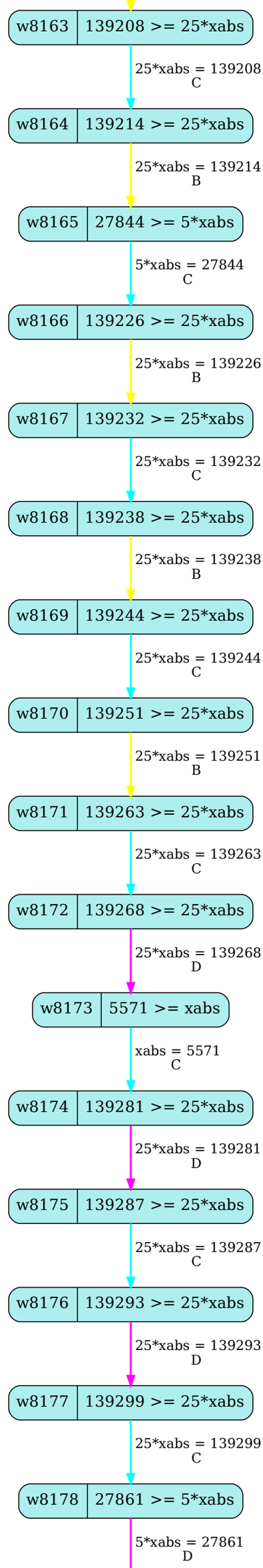
w8163
139208 >= 25*xabs
25*xabs = 139208
C
w8164
139214 >= 25*xabs
25*xabs = 139214
B
w8165
27844 >= 5*xabs
5*xabs = 27844
C
w8166
139226 >= 25*xabs
25*xabs = 139226
B
w8167
139232 >= 25*xabs
25*xabs = 139232
C
w8168
139238 >= 25*xabs
25*xabs = 139238
B
w8169
139244 >= 25*xabs
25*xabs = 139244
C
w8170
139251 >= 25*xabs
25*xabs = 139251
B
w8171
139263 >= 25*xabs
25*xabs = 139263
C
w8172
139268 >= 25*xabs
25*xabs = 139268
D
w8173
5571 >= xabs
xabs = 5571
C
w8174
139281 >= 25*xabs
25*xabs = 139281
D
w8175
139287 >= 25*xabs
25*xabs = 139287
C
w8176
139293 >= 25*xabs
25*xabs = 139293
D
w8177
139299 >= 25*xabs
25*xabs = 139299
C
w8178
27861 >= 5*xabs
5*xabs = 27861
D

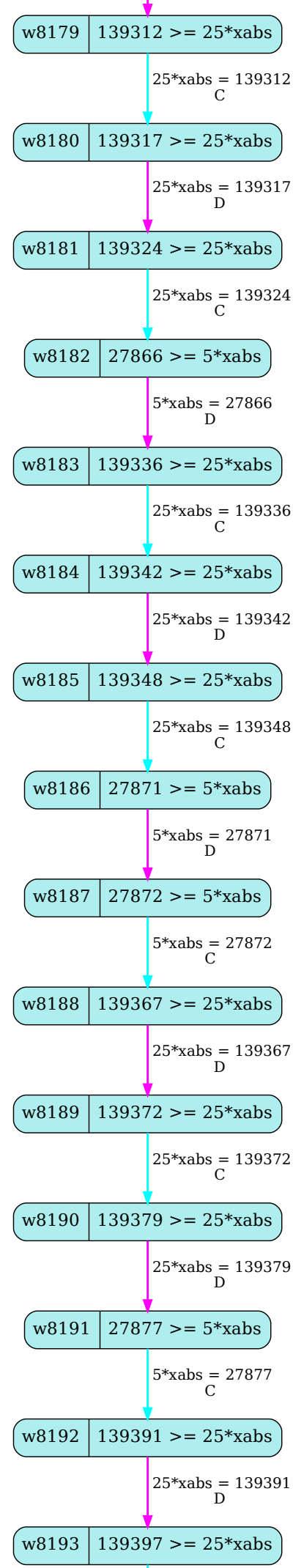
w8179
139312 >= 25*xabs
25*xabs = 139312
C
w8180
139317 >= 25*xabs
25*xabs = 139317
D
w8181
139324 >= 25*xabs
25*xabs = 139324
C
w8182
27866 >= 5*xabs
5*xabs = 27866
D
w8183
139336 >= 25*xabs
25*xabs = 139336
C
w8184
139342 >= 25*xabs
25*xabs = 139342
D
w8185
139348 >= 25*xabs
25*xabs = 139348
C
w8186
27871 >= 5*xabs
5*xabs = 27871
D
w8187
27872 >= 5*xabs
5*xabs = 27872
C
w8188
139367 >= 25*xabs
25*xabs = 139367
D
w8189
139372 >= 25*xabs
25*xabs = 139372
C
w8190
139379 >= 25*xabs
25*xabs = 139379
D
w8191
27877 >= 5*xabs
5*xabs = 27877
C
w8192
139391 >= 25*xabs
25*xabs = 139391
D
w8193
139397 >= 25*xabs

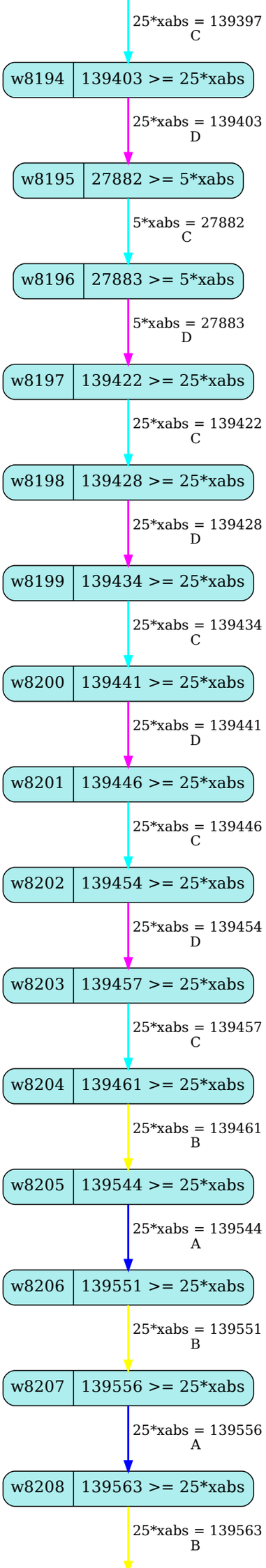
25*xabs = 139397
C
w8194
139403 >= 25*xabs
25*xabs = 139403
D
w8195
27882 >= 5*xabs
5*xabs = 27882
C
w8196
27883 >= 5*xabs
5*xabs = 27883
D
w8197
139422 >= 25*xabs
25*xabs = 139422
C
w8198
139428 >= 25*xabs
25*xabs = 139428
D
w8199
139434 >= 25*xabs
25*xabs = 139434
C
w8200
139441 >= 25*xabs
25*xabs = 139441
D
w8201
139446 >= 25*xabs
25*xabs = 139446
C
w8202
139454 >= 25*xabs
25*xabs = 139454
D
w8203
139457 >= 25*xabs
25*xabs = 139457
C
w8204
139461 >= 25*xabs
25*xabs = 139461
B
w8205
139544 >= 25*xabs
25*xabs = 139544
A
w8206
139551 >= 25*xabs
25*xabs = 139551
B
w8207
139556 >= 25*xabs
25*xabs = 139556
A
w8208
139563 >= 25*xabs
25*xabs = 139563
B

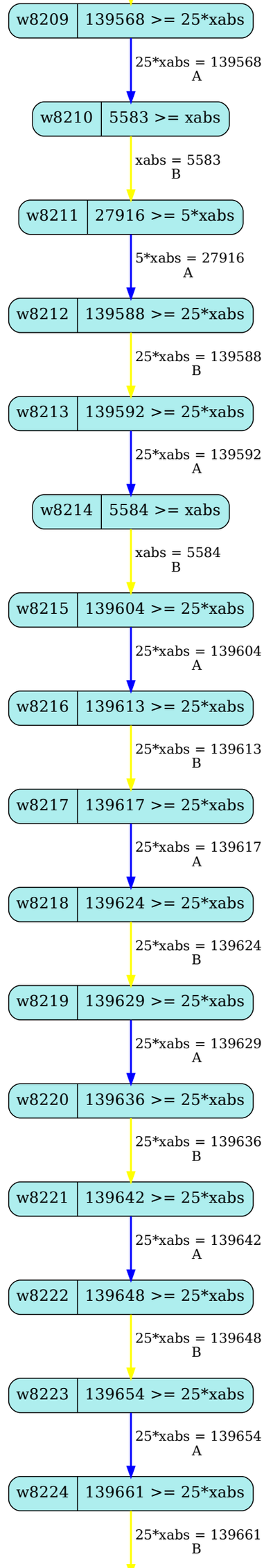
w8209
139568 >= 25*xabs
25*xabs = 139568
A
w8210
5583 >= xabs
xabs = 5583
B
w8211
27916 >= 5*xabs
5*xabs = 27916
A
w8212
139588 >= 25*xabs
25*xabs = 139588
B
w8213
139592 >= 25*xabs
25*xabs = 139592
A
w8214
5584 >= xabs
xabs = 5584
B
w8215
139604 >= 25*xabs
25*xabs = 139604
A
w8216
139613 >= 25*xabs
25*xabs = 139613
B
w8217
139617 >= 25*xabs
25*xabs = 139617
A
w8218
139624 >= 25*xabs
25*xabs = 139624
B
w8219
139629 >= 25*xabs
25*xabs = 139629
A
w8220
139636 >= 25*xabs
25*xabs = 139636
B
w8221
139642 >= 25*xabs
25*xabs = 139642
A
w8222
139648 >= 25*xabs
25*xabs = 139648
B
w8223
139654 >= 25*xabs
25*xabs = 139654
A
w8224
139661 >= 25*xabs
25*xabs = 139661
B

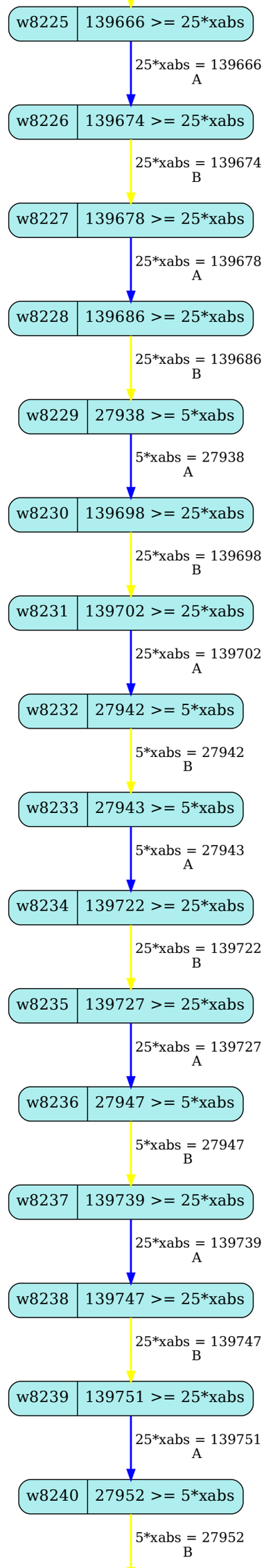
w8225
139666 >= 25*xabs
25*xabs = 139666
A
w8226
139674 >= 25*xabs
25*xabs = 139674
B
w8227
139678 >= 25*xabs
25*xabs = 139678
A
w8228
139686 >= 25*xabs
25*xabs = 139686
B
w8229
27938 >= 5*xabs
5*xabs = 27938
A
w8230
139698 >= 25*xabs
25*xabs = 139698
B
w8231
139702 >= 25*xabs
25*xabs = 139702
A
w8232
27942 >= 5*xabs
5*xabs = 27942
B
w8233
27943 >= 5*xabs
5*xabs = 27943
A
w8234
139722 >= 25*xabs
25*xabs = 139722
B
w8235
139727 >= 25*xabs
25*xabs = 139727
A
w8236
27947 >= 5*xabs
5*xabs = 27947
B
w8237
139739 >= 25*xabs
25*xabs = 139739
A
w8238
139747 >= 25*xabs
25*xabs = 139747
B
w8239
139751 >= 25*xabs
25*xabs = 139751
A
w8240
27952 >= 5*xabs
5*xabs = 27952
B

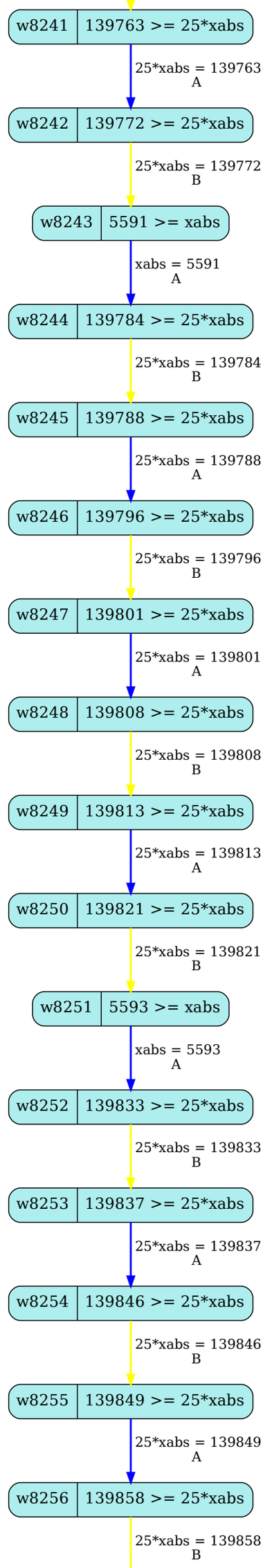
w8241
139763 >= 25*xabs
25*xabs = 139763
A
w8242
139772 >= 25*xabs
25*xabs = 139772
B
w8243
5591 >= xabs
xabs = 5591
A
w8244
139784 >= 25*xabs
25*xabs = 139784
B
w8245
139788 >= 25*xabs
25*xabs = 139788
A
w8246
139796 >= 25*xabs
25*xabs = 139796
B
w8247
139801 >= 25*xabs
25*xabs = 139801
A
w8248
139808 >= 25*xabs
25*xabs = 139808
B
w8249
139813 >= 25*xabs
25*xabs = 139813
A
w8250
139821 >= 25*xabs
25*xabs = 139821
B
w8251
5593 >= xabs
xabs = 5593
A
w8252
139833 >= 25*xabs
25*xabs = 139833
B
w8253
139837 >= 25*xabs
25*xabs = 139837
A
w8254
139846 >= 25*xabs
25*xabs = 139846
B
w8255
139849 >= 25*xabs
25*xabs = 139849
A
w8256
139858 >= 25*xabs
25*xabs = 139858
B

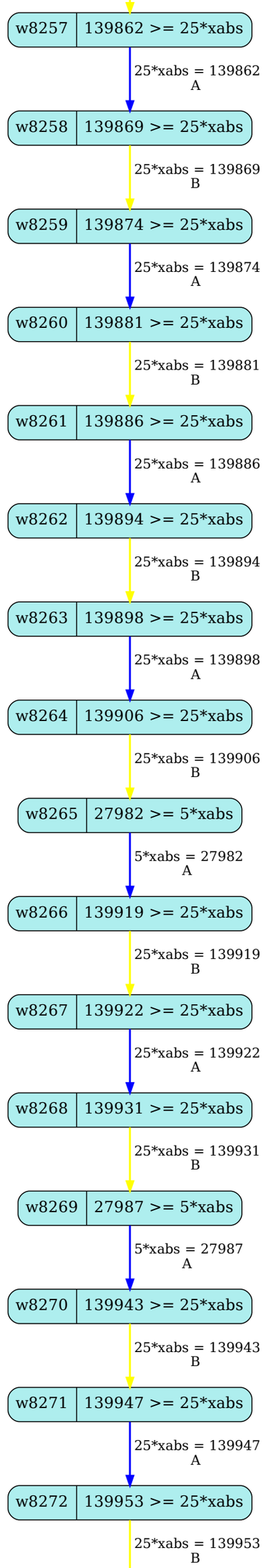
w8257
139862 >= 25*xabs
25*xabs = 139862
A
w8258
139869 >= 25*xabs
25*xabs = 139869
B
w8259
139874 >= 25*xabs
25*xabs = 139874
A
w8260
139881 >= 25*xabs
25*xabs = 139881
B
w8261
139886 >= 25*xabs
25*xabs = 139886
A
w8262
139894 >= 25*xabs
25*xabs = 139894
B
w8263
139898 >= 25*xabs
25*xabs = 139898
A
w8264
139906 >= 25*xabs
25*xabs = 139906
B
w8265
27982 >= 5*xabs
5*xabs = 27982
A
w8266
139919 >= 25*xabs
25*xabs = 139919
B
w8267
139922 >= 25*xabs
25*xabs = 139922
A
w8268
139931 >= 25*xabs
25*xabs = 139931
B
w8269
27987 >= 5*xabs
5*xabs = 27987
A
w8270
139943 >= 25*xabs
25*xabs = 139943
B
w8271
139947 >= 25*xabs
25*xabs = 139947
A
w8272
139953 >= 25*xabs
25*xabs = 139953
B

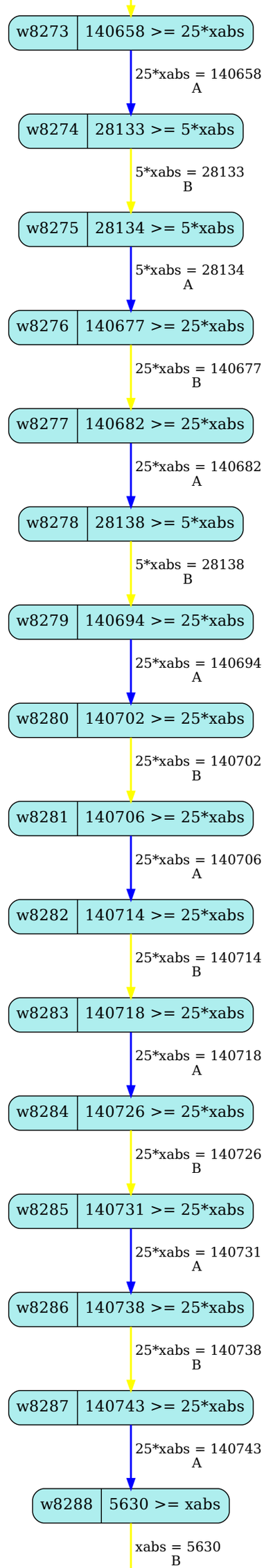
w8273
140658 >= 25*xabs
25*xabs = 140658
A
w8274
28133 >= 5*xabs
5*xabs = 28133
B
w8275
28134 >= 5*xabs
5*xabs = 28134
A
w8276
140677 >= 25*xabs
25*xabs = 140677
B
w8277
140682 >= 25*xabs
25*xabs = 140682
A
w8278
28138 >= 5*xabs
5*xabs = 28138
B
w8279
140694 >= 25*xabs
25*xabs = 140694
A
w8280
140702 >= 25*xabs
25*xabs = 140702
B
w8281
140706 >= 25*xabs
25*xabs = 140706
A
w8282
140714 >= 25*xabs
25*xabs = 140714
B
w8283
140718 >= 25*xabs
25*xabs = 140718
A
w8284
140726 >= 25*xabs
25*xabs = 140726
B
w8285
140731 >= 25*xabs
25*xabs = 140731
A
w8286
140738 >= 25*xabs
25*xabs = 140738
B
w8287
140743 >= 25*xabs
25*xabs = 140743
A
w8288
5630 >= xabs
xabs = 5630
B

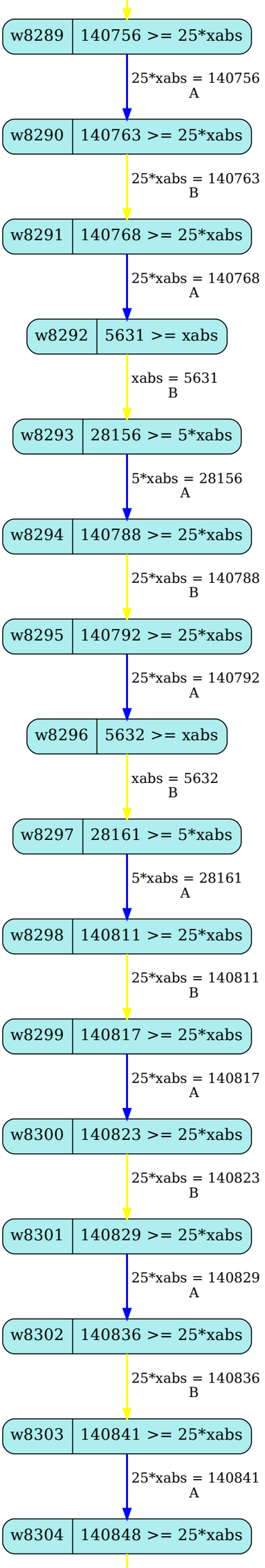
w8289
140756 >= 25*xabs
25*xabs = 140756
A
w8290
140763 >= 25*xabs
25*xabs = 140763
B
w8291
140768 >= 25*xabs
25*xabs = 140768
A
w8292
5631 >= xabs
xabs = 5631
B
w8293
28156 >= 5*xabs
5*xabs = 28156
A
w8294
140788 >= 25*xabs
25*xabs = 140788
B
w8295
140792 >= 25*xabs
25*xabs = 140792
A
w8296
5632 >= xabs
xabs = 5632
B
w8297
28161 >= 5*xabs
5*xabs = 28161
A
w8298
140811 >= 25*xabs
25*xabs = 140811
B
w8299
140817 >= 25*xabs
25*xabs = 140817
A
w8300
140823 >= 25*xabs
25*xabs = 140823
B
w8301
140829 >= 25*xabs
25*xabs = 140829
A
w8302
140836 >= 25*xabs
25*xabs = 140836
B
w8303
140841 >= 25*xabs
25*xabs = 140841
A
w8304
140848 >= 25*xabs

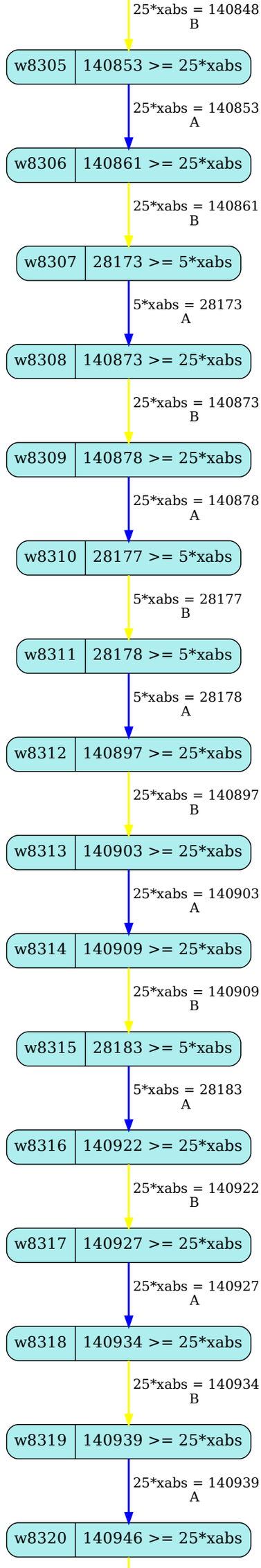
25*xabs = 140848
B
w8305
140853 >= 25*xabs
25*xabs = 140853
A
w8306
140861 >= 25*xabs
25*xabs = 140861
B
w8307
28173 >= 5*xabs
5*xabs = 28173
A
w8308
140873 >= 25*xabs
25*xabs = 140873
B
w8309
140878 >= 25*xabs
25*xabs = 140878
A
w8310
28177 >= 5*xabs
5*xabs = 28177
B
w8311
28178 >= 5*xabs
5*xabs = 28178
A
w8312
140897 >= 25*xabs
25*xabs = 140897
B
w8313
140903 >= 25*xabs
25*xabs = 140903
A
w8314
140909 >= 25*xabs
25*xabs = 140909
B
w8315
28183 >= 5*xabs
5*xabs = 28183
A
w8316
140922 >= 25*xabs
25*xabs = 140922
B
w8317
140927 >= 25*xabs
25*xabs = 140927
A
w8318
140934 >= 25*xabs
25*xabs = 140934
B
w8319
140939 >= 25*xabs
25*xabs = 140939
A
w8320
140946 >= 25*xabs

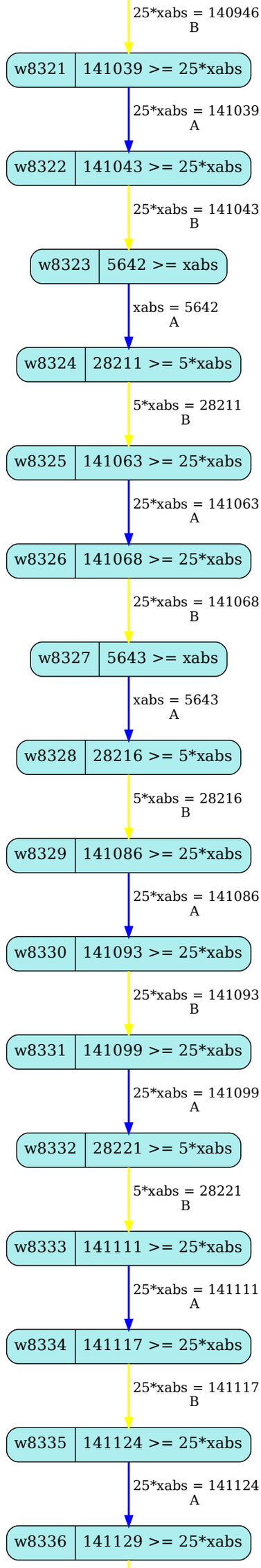
25*xabs = 140946
B
w8321
141039 >= 25*xabs
25*xabs = 141039
A
w8322
141043 >= 25*xabs
25*xabs = 141043
B
w8323
5642 >= xabs
xabs = 5642
A
w8324
28211 >= 5*xabs
5*xabs = 28211
B
w8325
141063 >= 25*xabs
25*xabs = 141063
A
w8326
141068 >= 25*xabs
25*xabs = 141068
B
w8327
5643 >= xabs
xabs = 5643
A
w8328
28216 >= 5*xabs
5*xabs = 28216
B
w8329
141086 >= 25*xabs
25*xabs = 141086
A
w8330
141093 >= 25*xabs
25*xabs = 141093
B
w8331
141099 >= 25*xabs
25*xabs = 141099
A
w8332
28221 >= 5*xabs
5*xabs = 28221
B
w8333
141111 >= 25*xabs
25*xabs = 141111
A
w8334
141117 >= 25*xabs
25*xabs = 141117
B
w8335
141124 >= 25*xabs
25*xabs = 141124
A
w8336
141129 >= 25*xabs

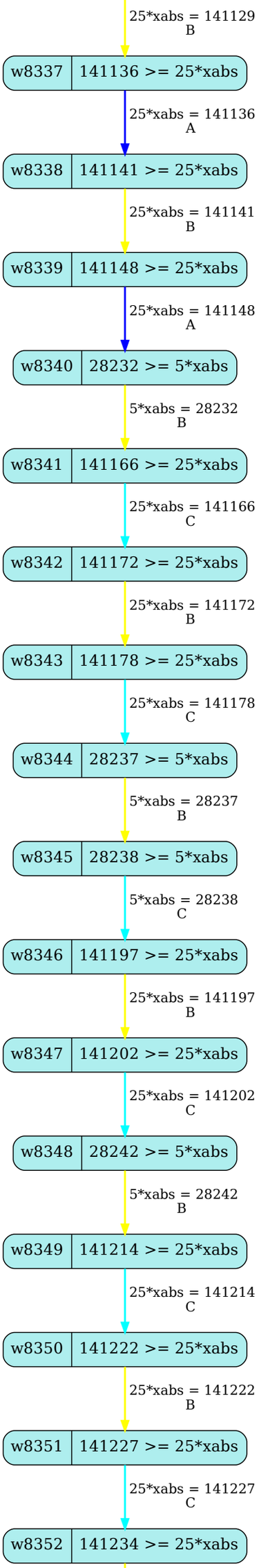
25*xabs = 141129
B
w8337
141136 >= 25*xabs
25*xabs = 141136
A
w8338
141141 >= 25*xabs
25*xabs = 141141
B
w8339
141148 >= 25*xabs
25*xabs = 141148
A
w8340
28232 >= 5*xabs
5*xabs = 28232
B
w8341
141166 >= 25*xabs
25*xabs = 141166
C
w8342
141172 >= 25*xabs
25*xabs = 141172
B
w8343
141178 >= 25*xabs
25*xabs = 141178
C
w8344
28237 >= 5*xabs
5*xabs = 28237
B
w8345
28238 >= 5*xabs
5*xabs = 28238
C
w8346
141197 >= 25*xabs
25*xabs = 141197
B
w8347
141202 >= 25*xabs
25*xabs = 141202
C
w8348
28242 >= 5*xabs
5*xabs = 28242
B
w8349
141214 >= 25*xabs
25*xabs = 141214
C
w8350
141222 >= 25*xabs
25*xabs = 141222
B
w8351
141227 >= 25*xabs
25*xabs = 141227
C
w8352
141234 >= 25*xabs

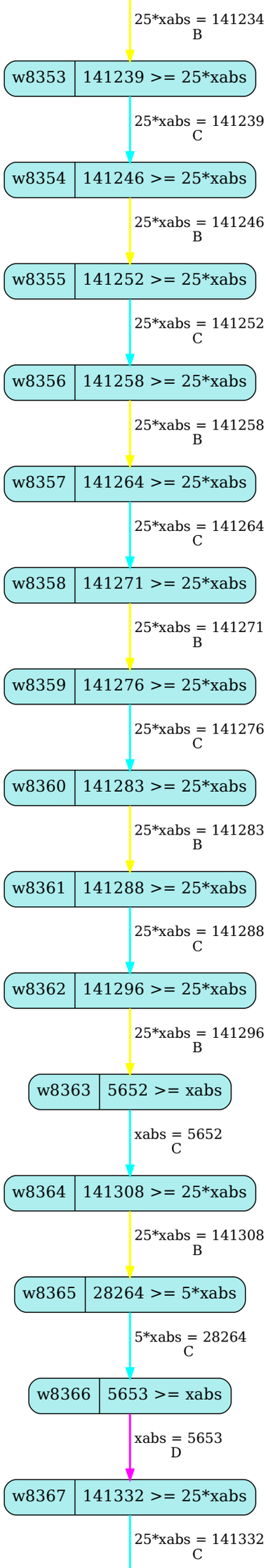
25*xabs = 141234
B
w8353
141239 >= 25*xabs
25*xabs = 141239
C
w8354
141246 >= 25*xabs
25*xabs = 141246
B
w8355
141252 >= 25*xabs
25*xabs = 141252
C
w8356
141258 >= 25*xabs
25*xabs = 141258
B
w8357
141264 >= 25*xabs
25*xabs = 141264
C
w8358
141271 >= 25*xabs
25*xabs = 141271
B
w8359
141276 >= 25*xabs
25*xabs = 141276
C
w8360
141283 >= 25*xabs
25*xabs = 141283
B
w8361
141288 >= 25*xabs
25*xabs = 141288
C
w8362
141296 >= 25*xabs
25*xabs = 141296
B
w8363
5652 >= xabs
xabs = 5652
C
w8364
141308 >= 25*xabs
25*xabs = 141308
B
w8365
28264 >= 5*xabs
5*xabs = 28264
C
w8366
5653 >= xabs
xabs = 5653
D
w8367
141332 >= 25*xabs
25*xabs = 141332
C

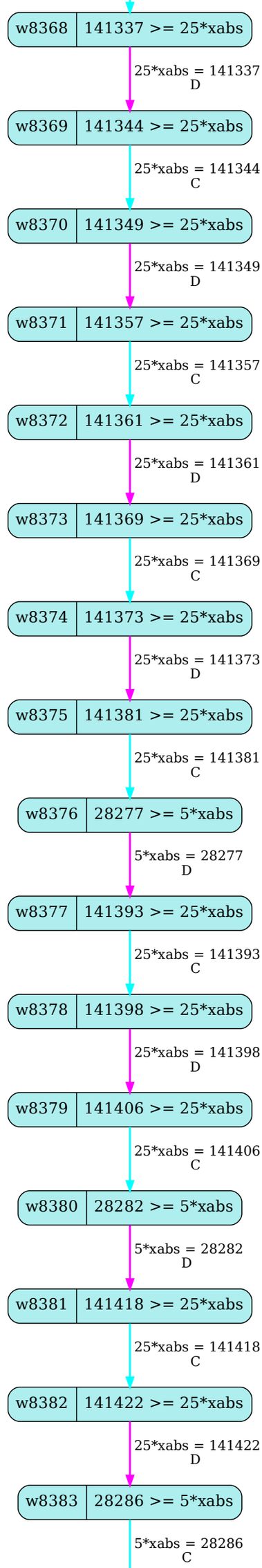
w8368
141337 >= 25*xabs
25*xabs = 141337
D
w8369
141344 >= 25*xabs
25*xabs = 141344
C
w8370
141349 >= 25*xabs
25*xabs = 141349
D
w8371
141357 >= 25*xabs
25*xabs = 141357
C
w8372
141361 >= 25*xabs
25*xabs = 141361
D
w8373
141369 >= 25*xabs
25*xabs = 141369
C
w8374
141373 >= 25*xabs
25*xabs = 141373
D
w8375
141381 >= 25*xabs
25*xabs = 141381
C
w8376
28277 >= 5*xabs
5*xabs = 28277
D
w8377
141393 >= 25*xabs
25*xabs = 141393
C
w8378
141398 >= 25*xabs
25*xabs = 141398
D
w8379
141406 >= 25*xabs
25*xabs = 141406
C
w8380
28282 >= 5*xabs
5*xabs = 28282
D
w8381
141418 >= 25*xabs
25*xabs = 141418
C
w8382
141422 >= 25*xabs
25*xabs = 141422
D
w8383
28286 >= 5*xabs
5*xabs = 28286
C

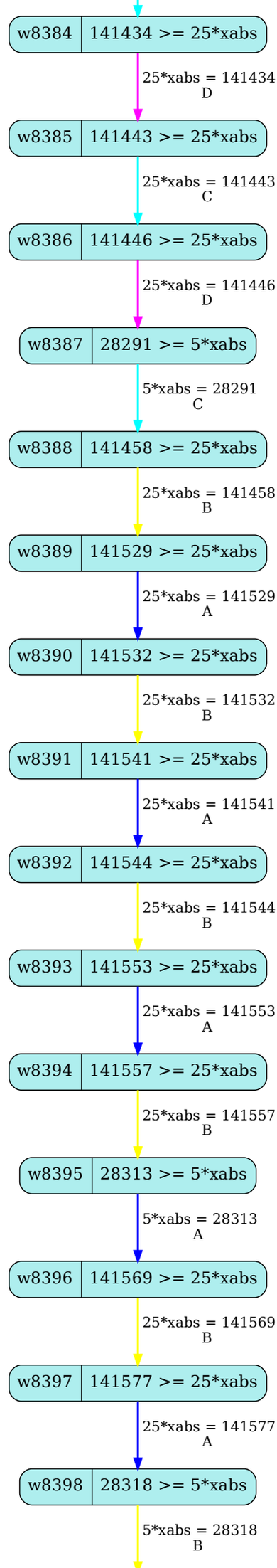
w8384
141434 >= 25*xabs
25*xabs = 141434
D
w8385
141443 >= 25*xabs
25*xabs = 141443
C
w8386
141446 >= 25*xabs
25*xabs = 141446
D
w8387
28291 >= 5*xabs
5*xabs = 28291
C
w8388
141458 >= 25*xabs
25*xabs = 141458
B
w8389
141529 >= 25*xabs
25*xabs = 141529
A
w8390
141532 >= 25*xabs
25*xabs = 141532
B
w8391
141541 >= 25*xabs
25*xabs = 141541
A
w8392
141544 >= 25*xabs
25*xabs = 141544
B
w8393
141553 >= 25*xabs
25*xabs = 141553
A
w8394
141557 >= 25*xabs
25*xabs = 141557
B
w8395
28313 >= 5*xabs
5*xabs = 28313
A
w8396
141569 >= 25*xabs
25*xabs = 141569
B
w8397
141577 >= 25*xabs
25*xabs = 141577
A
w8398
28318 >= 5*xabs
5*xabs = 28318
B

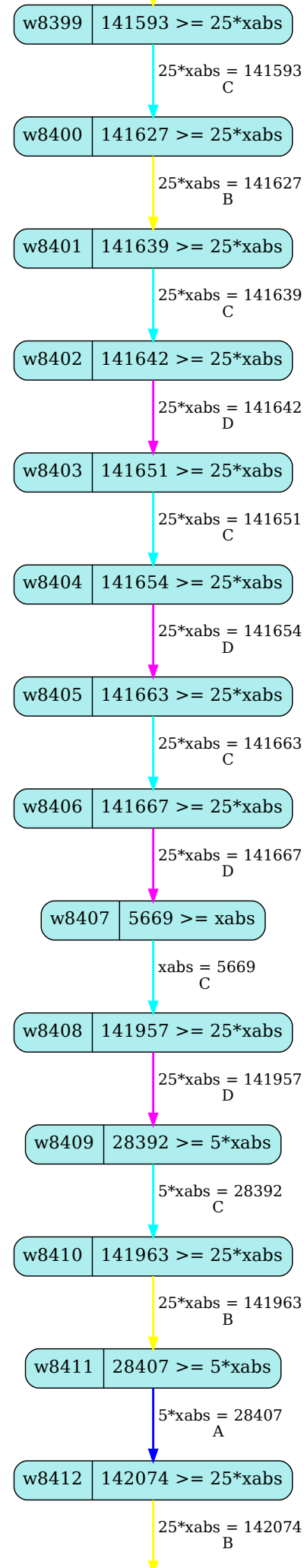
w8399
141593 >= 25*xabs
25*xabs = 141593
C
w8400
141627 >= 25*xabs
25*xabs = 141627
B
w8401
141639 >= 25*xabs
25*xabs = 141639
C
w8402
141642 >= 25*xabs
25*xabs = 141642
D
w8403
141651 >= 25*xabs
25*xabs = 141651
C
w8404
141654 >= 25*xabs
25*xabs = 141654
D
w8405
141663 >= 25*xabs
25*xabs = 141663
C
w8406
141667 >= 25*xabs
25*xabs = 141667
D
w8407
5669 >= xabs
xabs = 5669
C
w8408
141957 >= 25*xabs
25*xabs = 141957
D
w8409
28392 >= 5*xabs
5*xabs = 28392
C
w8410
141963 >= 25*xabs
25*xabs = 141963
B
w8411
28407 >= 5*xabs
5*xabs = 28407
A
w8412
142074 >= 25*xabs
25*xabs = 142074
B

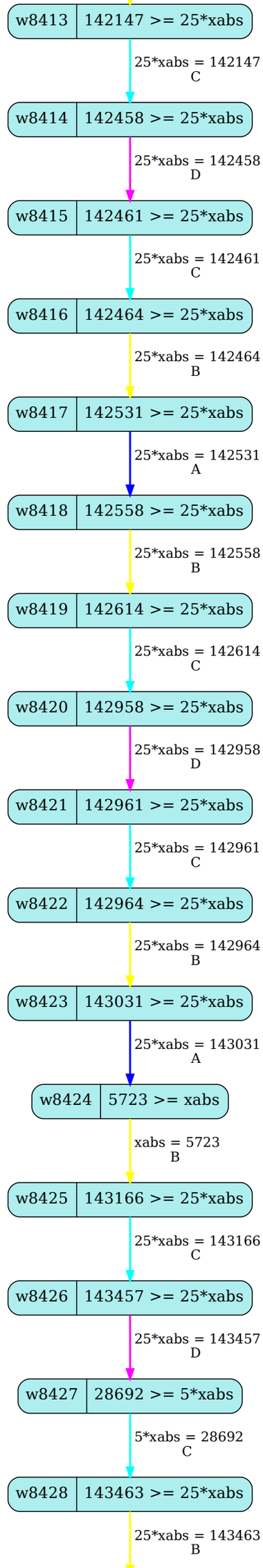
w8413
142147 >= 25*xabs
25*xabs = 142147
C
w8414
142458 >= 25*xabs
25*xabs = 142458
D
w8415
142461 >= 25*xabs
25*xabs = 142461
C
w8416
142464 >= 25*xabs
25*xabs = 142464
B
w8417
142531 >= 25*xabs
25*xabs = 142531
A
w8418
142558 >= 25*xabs
25*xabs = 142558
B
w8419
142614 >= 25*xabs
25*xabs = 142614
C
w8420
142958 >= 25*xabs
25*xabs = 142958
D
w8421
142961 >= 25*xabs
25*xabs = 142961
C
w8422
142964 >= 25*xabs
25*xabs = 142964
B
w8423
143031 >= 25*xabs
25*xabs = 143031
A
w8424
5723 >= xabs
xabs = 5723
B
w8425
143166 >= 25*xabs
25*xabs = 143166
C
w8426
143457 >= 25*xabs
25*xabs = 143457
D
w8427
28692 >= 5*xabs
5*xabs = 28692
C
w8428
143463 >= 25*xabs
25*xabs = 143463
B

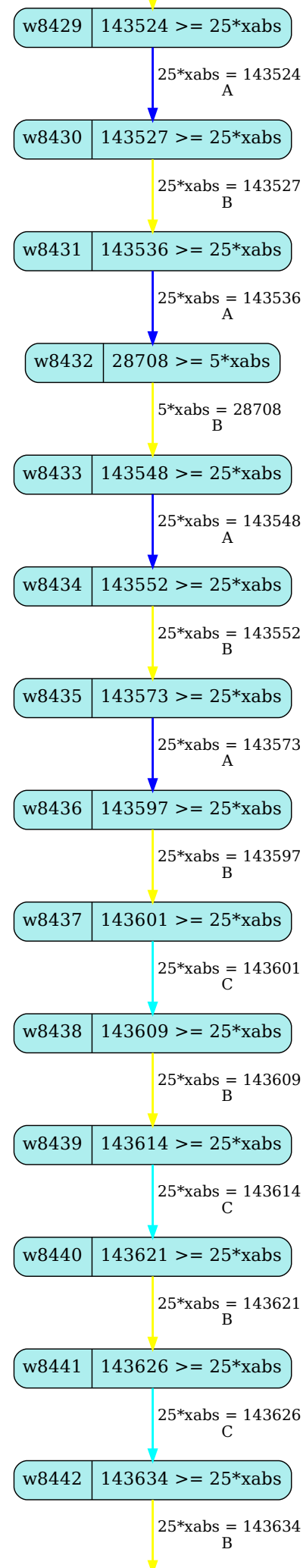
w8429
143524 >= 25*xabs
25*xabs = 143524
A
w8430
143527 >= 25*xabs
25*xabs = 143527
B
w8431
143536 >= 25*xabs
25*xabs = 143536
A
w8432
28708 >= 5*xabs
5*xabs = 28708
B
w8433
143548 >= 25*xabs
25*xabs = 143548
A
w8434
143552 >= 25*xabs
25*xabs = 143552
B
w8435
143573 >= 25*xabs
25*xabs = 143573
A
w8436
143597 >= 25*xabs
25*xabs = 143597
B
w8437
143601 >= 25*xabs
25*xabs = 143601
C
w8438
143609 >= 25*xabs
25*xabs = 143609
B
w8439
143614 >= 25*xabs
25*xabs = 143614
C
w8440
143621 >= 25*xabs
25*xabs = 143621
B
w8441
143626 >= 25*xabs
25*xabs = 143626
C
w8442
143634 >= 25*xabs
25*xabs = 143634
B

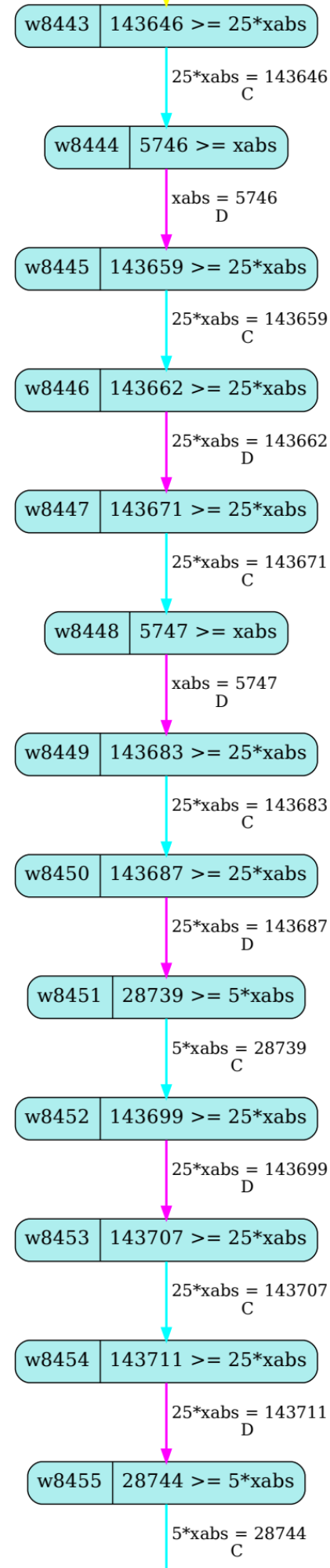
w8443
143646 >= 25*xabs
25*xabs = 143646
C
w8444
5746 >= xabs
xabs = 5746
D
w8445
143659 >= 25*xabs
25*xabs = 143659
C
w8446
143662 >= 25*xabs
25*xabs = 143662
D
w8447
143671 >= 25*xabs
25*xabs = 143671
C
w8448
5747 >= xabs
xabs = 5747
D
w8449
143683 >= 25*xabs
25*xabs = 143683
C
w8450
143687 >= 25*xabs
25*xabs = 143687
D
w8451
28739 >= 5*xabs
5*xabs = 28739
C
w8452
143699 >= 25*xabs
25*xabs = 143699
D
w8453
143707 >= 25*xabs
25*xabs = 143707
C
w8454
143711 >= 25*xabs
25*xabs = 143711
D
w8455
28744 >= 5*xabs
5*xabs = 28744
C

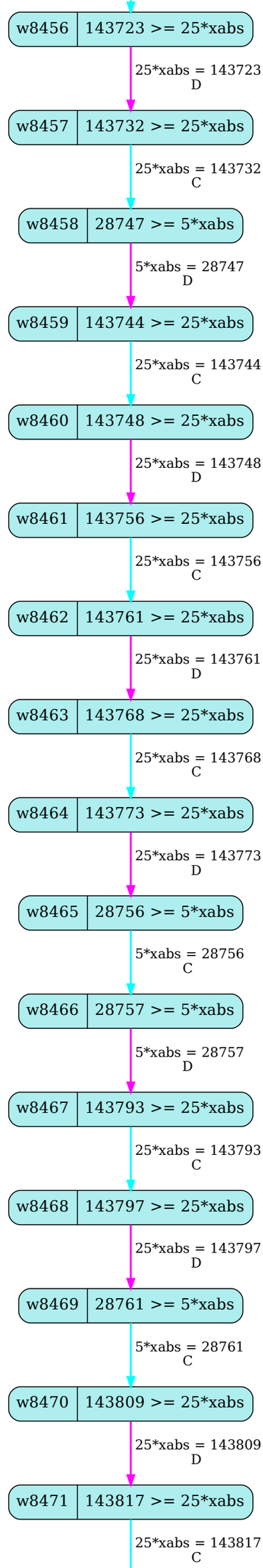
w8456
143723 >= 25*xabs
25*xabs = 143723
D
w8457
143732 >= 25*xabs
25*xabs = 143732
C
w8458
28747 >= 5*xabs
5*xabs = 28747
D
w8459
143744 >= 25*xabs
25*xabs = 143744
C
w8460
143748 >= 25*xabs
25*xabs = 143748
D
w8461
143756 >= 25*xabs
25*xabs = 143756
C
w8462
143761 >= 25*xabs
25*xabs = 143761
D
w8463
143768 >= 25*xabs
25*xabs = 143768
C
w8464
143773 >= 25*xabs
25*xabs = 143773
D
w8465
28756 >= 5*xabs
5*xabs = 28756
C
w8466
28757 >= 5*xabs
5*xabs = 28757
D
w8467
143793 >= 25*xabs
25*xabs = 143793
C
w8468
143797 >= 25*xabs
25*xabs = 143797
D
w8469
28761 >= 5*xabs
5*xabs = 28761
C
w8470
143809 >= 25*xabs
25*xabs = 143809
D
w8471
143817 >= 25*xabs
25*xabs = 143817
C

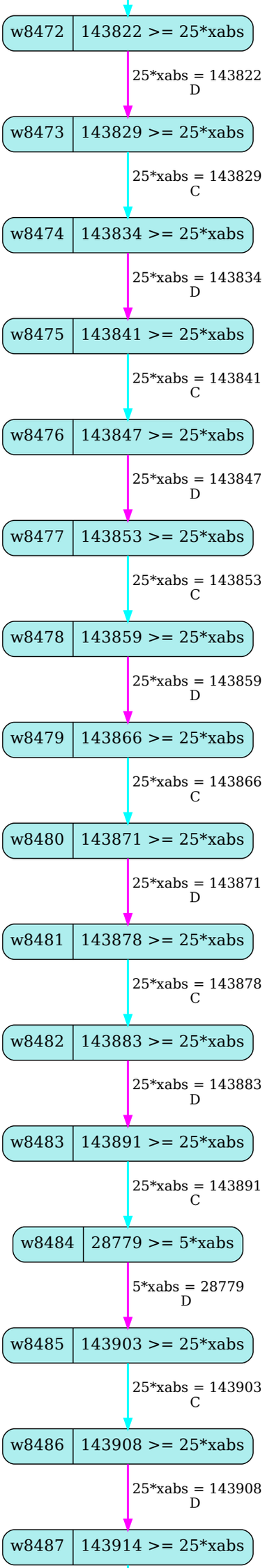
w8472
143822 >= 25*xabs
25*xabs = 143822
D
w8473
143829 >= 25*xabs
25*xabs = 143829
C
w8474
143834 >= 25*xabs
25*xabs = 143834
D
w8475
143841 >= 25*xabs
25*xabs = 143841
C
w8476
143847 >= 25*xabs
25*xabs = 143847
D
w8477
143853 >= 25*xabs
25*xabs = 143853
C
w8478
143859 >= 25*xabs
25*xabs = 143859
D
w8479
143866 >= 25*xabs
25*xabs = 143866
C
w8480
143871 >= 25*xabs
25*xabs = 143871
D
w8481
143878 >= 25*xabs
25*xabs = 143878
C
w8482
143883 >= 25*xabs
25*xabs = 143883
D
w8483
143891 >= 25*xabs
25*xabs = 143891
C
w8484
28779 >= 5*xabs
5*xabs = 28779
D
w8485
143903 >= 25*xabs
25*xabs = 143903
C
w8486
143908 >= 25*xabs
25*xabs = 143908
D
w8487
143914 >= 25*xabs

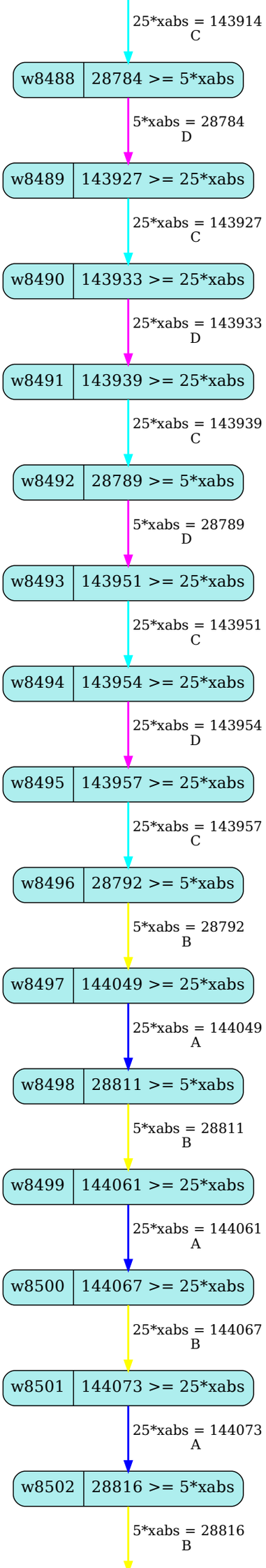
25*xabs = 143914
C
w8488
28784 >= 5*xabs
5*xabs = 28784
D
w8489
143927 >= 25*xabs
25*xabs = 143927
C
w8490
143933 >= 25*xabs
25*xabs = 143933
D
w8491
143939 >= 25*xabs
25*xabs = 143939
C
w8492
28789 >= 5*xabs
5*xabs = 28789
D
w8493
143951 >= 25*xabs
25*xabs = 143951
C
w8494
143954 >= 25*xabs
25*xabs = 143954
D
w8495
143957 >= 25*xabs
25*xabs = 143957
C
w8496
28792 >= 5*xabs
5*xabs = 28792
B
w8497
144049 >= 25*xabs
25*xabs = 144049
A
w8498
28811 >= 5*xabs
5*xabs = 28811
B
w8499
144061 >= 25*xabs
25*xabs = 144061
A
w8500
144067 >= 25*xabs
25*xabs = 144067
B
w8501
144073 >= 25*xabs
25*xabs = 144073
A
w8502
28816 >= 5*xabs
5*xabs = 28816
B

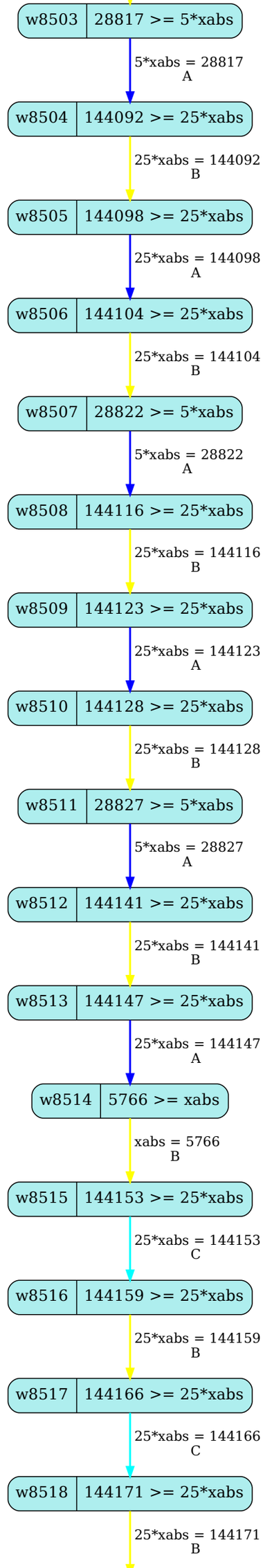
w8503
28817 >= 5*xabs
5*xabs = 28817
A
w8504
144092 >= 25*xabs
25*xabs = 144092
B
w8505
144098 >= 25*xabs
25*xabs = 144098
A
w8506
144104 >= 25*xabs
25*xabs = 144104
B
w8507
28822 >= 5*xabs
5*xabs = 28822
A
w8508
144116 >= 25*xabs
25*xabs = 144116
B
w8509
144123 >= 25*xabs
25*xabs = 144123
A
w8510
144128 >= 25*xabs
25*xabs = 144128
B
w8511
28827 >= 5*xabs
5*xabs = 28827
A
w8512
144141 >= 25*xabs
25*xabs = 144141
B
w8513
144147 >= 25*xabs
25*xabs = 144147
A
w8514
5766 >= xabs
xabs = 5766
B
w8515
144153 >= 25*xabs
25*xabs = 144153
C
w8516
144159 >= 25*xabs
25*xabs = 144159
B
w8517
144166 >= 25*xabs
25*xabs = 144166
C
w8518
144171 >= 25*xabs
25*xabs = 144171
B

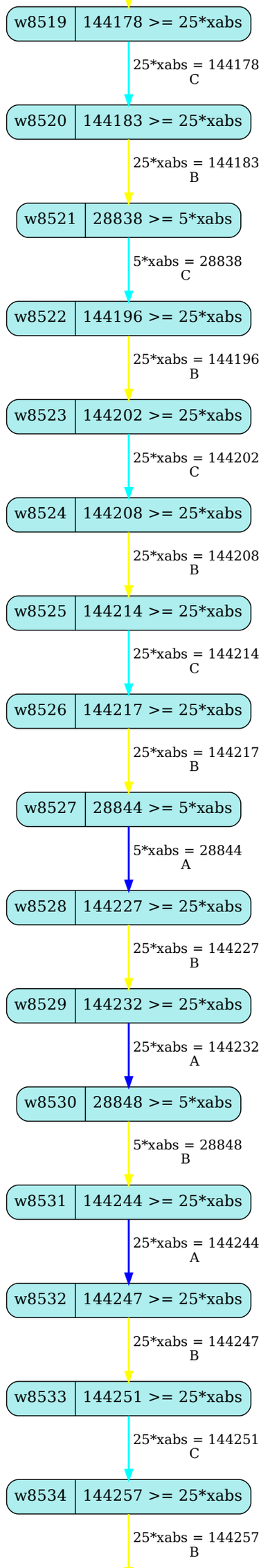
w8519
144178 >= 25*xabs
25*xabs = 144178
C
w8520
144183 >= 25*xabs
25*xabs = 144183
B
w8521
28838 >= 5*xabs
5*xabs = 28838
C
w8522
144196 >= 25*xabs
25*xabs = 144196
B
w8523
144202 >= 25*xabs
25*xabs = 144202
C
w8524
144208 >= 25*xabs
25*xabs = 144208
B
w8525
144214 >= 25*xabs
25*xabs = 144214
C
w8526
144217 >= 25*xabs
25*xabs = 144217
B
w8527
28844 >= 5*xabs
5*xabs = 28844
A
w8528
144227 >= 25*xabs
25*xabs = 144227
B
w8529
144232 >= 25*xabs
25*xabs = 144232
A
w8530
28848 >= 5*xabs
5*xabs = 28848
B
w8531
144244 >= 25*xabs
25*xabs = 144244
A
w8532
144247 >= 25*xabs
25*xabs = 144247
B
w8533
144251 >= 25*xabs
25*xabs = 144251
C
w8534
144257 >= 25*xabs
25*xabs = 144257
B

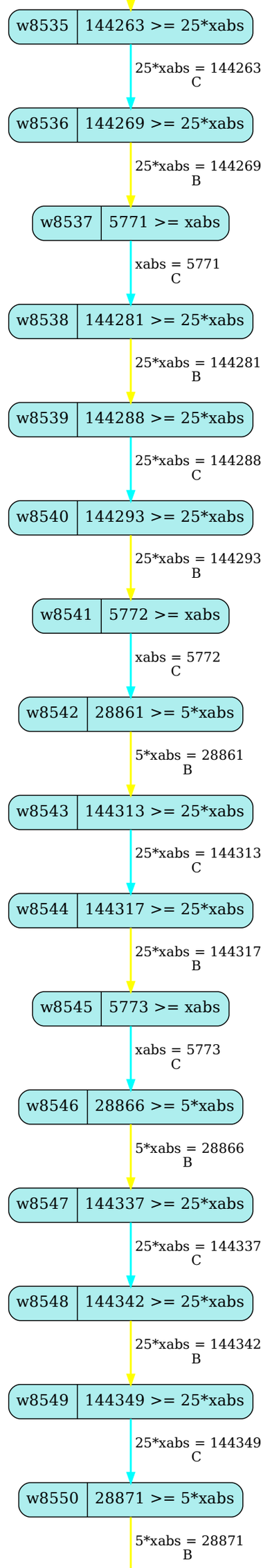
w8535
144263 >= 25*xabs
25*xabs = 144263
C
w8536
144269 >= 25*xabs
25*xabs = 144269
B
w8537
5771 >= xabs
xabs = 5771
C
w8538
144281 >= 25*xabs
25*xabs = 144281
B
w8539
144288 >= 25*xabs
25*xabs = 144288
C
w8540
144293 >= 25*xabs
25*xabs = 144293
B
w8541
5772 >= xabs
xabs = 5772
C
w8542
28861 >= 5*xabs
5*xabs = 28861
B
w8543
144313 >= 25*xabs
25*xabs = 144313
C
w8544
144317 >= 25*xabs
25*xabs = 144317
B
w8545
5773 >= xabs
xabs = 5773
C
w8546
28866 >= 5*xabs
5*xabs = 28866
B
w8547
144337 >= 25*xabs
25*xabs = 144337
C
w8548
144342 >= 25*xabs
25*xabs = 144342
B
w8549
144349 >= 25*xabs
25*xabs = 144349
C
w8550
28871 >= 5*xabs
5*xabs = 28871
B

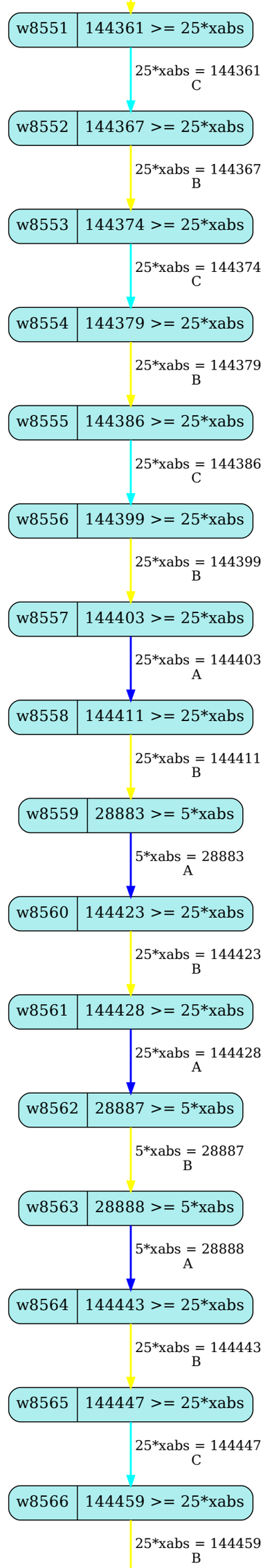
w8551
144361 >= 25*xabs
25*xabs = 144361
C
w8552
144367 >= 25*xabs
25*xabs = 144367
B
w8553
144374 >= 25*xabs
25*xabs = 144374
C
w8554
144379 >= 25*xabs
25*xabs = 144379
B
w8555
144386 >= 25*xabs
25*xabs = 144386
C
w8556
144399 >= 25*xabs
25*xabs = 144399
B
w8557
144403 >= 25*xabs
25*xabs = 144403
A
w8558
144411 >= 25*xabs
25*xabs = 144411
B
w8559
28883 >= 5*xabs
5*xabs = 28883
A
w8560
144423 >= 25*xabs
25*xabs = 144423
B
w8561
144428 >= 25*xabs
25*xabs = 144428
A
w8562
28887 >= 5*xabs
5*xabs = 28887
B
w8563
28888 >= 5*xabs
5*xabs = 28888
A
w8564
144443 >= 25*xabs
25*xabs = 144443
B
w8565
144447 >= 25*xabs
25*xabs = 144447
C
w8566
144459 >= 25*xabs
25*xabs = 144459
B

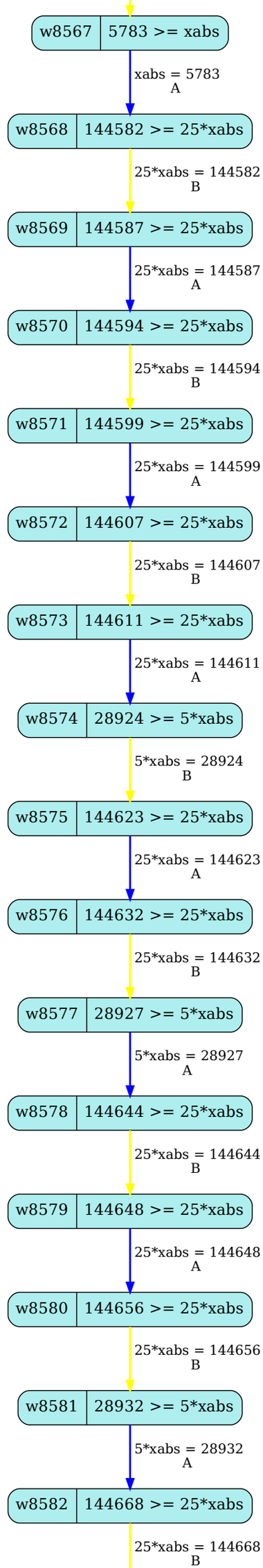
w8567
5783 >= xabs
xabs = 5783
A
w8568
144582 >= 25*xabs
25*xabs = 144582
B
w8569
144587 >= 25*xabs
25*xabs = 144587
A
w8570
144594 >= 25*xabs
25*xabs = 144594
B
w8571
144599 >= 25*xabs
25*xabs = 144599
A
w8572
144607 >= 25*xabs
25*xabs = 144607
B
w8573
144611 >= 25*xabs
25*xabs = 144611
A
w8574
28924 >= 5*xabs
5*xabs = 28924
B
w8575
144623 >= 25*xabs
25*xabs = 144623
A
w8576
144632 >= 25*xabs
25*xabs = 144632
B
w8577
28927 >= 5*xabs
5*xabs = 28927
A
w8578
144644 >= 25*xabs
25*xabs = 144644
B
w8579
144648 >= 25*xabs
25*xabs = 144648
A
w8580
144656 >= 25*xabs
25*xabs = 144656
B
w8581
28932 >= 5*xabs
5*xabs = 28932
A
w8582
144668 >= 25*xabs
25*xabs = 144668
B

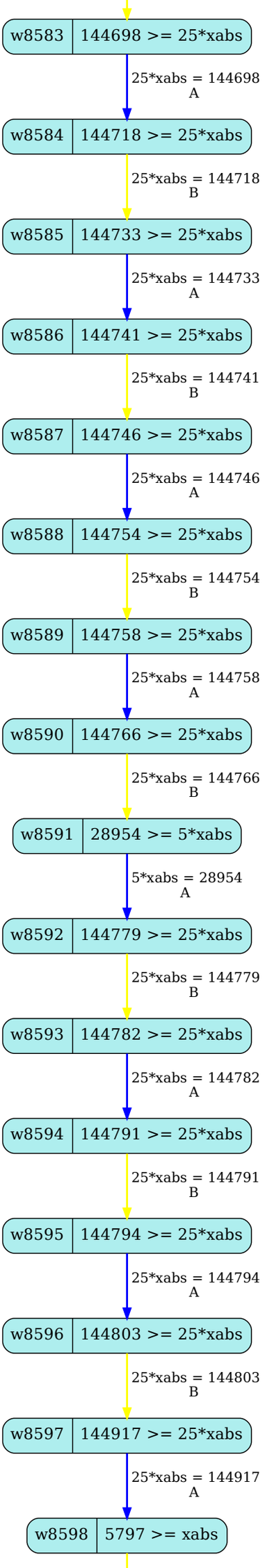
w8583
144698 >= 25*xabs
25*xabs = 144698
A
w8584
144718 >= 25*xabs
25*xabs = 144718
B
w8585
144733 >= 25*xabs
25*xabs = 144733
A
w8586
144741 >= 25*xabs
25*xabs = 144741
B
w8587
144746 >= 25*xabs
25*xabs = 144746
A
w8588
144754 >= 25*xabs
25*xabs = 144754
B
w8589
144758 >= 25*xabs
25*xabs = 144758
A
w8590
144766 >= 25*xabs
25*xabs = 144766
B
w8591
28954 >= 5*xabs
5*xabs = 28954
A
w8592
144779 >= 25*xabs
25*xabs = 144779
B
w8593
144782 >= 25*xabs
25*xabs = 144782
A
w8594
144791 >= 25*xabs
25*xabs = 144791
B
w8595
144794 >= 25*xabs
25*xabs = 144794
A
w8596
144803 >= 25*xabs
25*xabs = 144803
B
w8597
144917 >= 25*xabs
25*xabs = 144917
A
w8598
5797 >= xabs

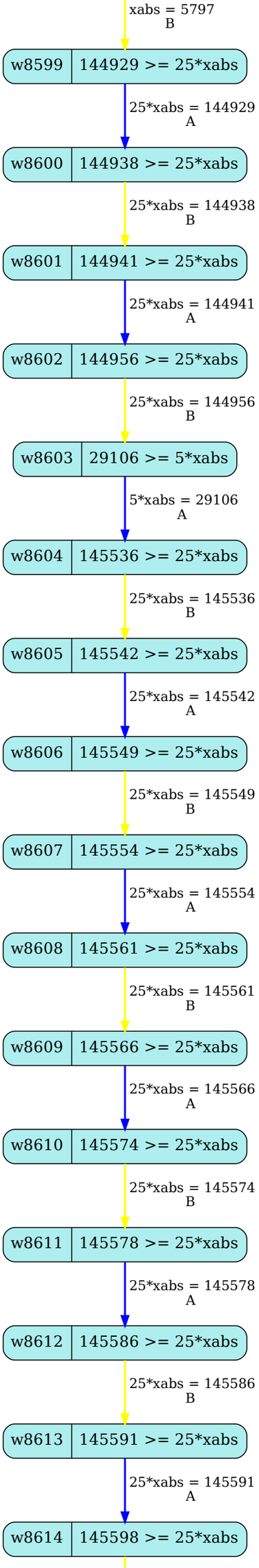
xabs = 5797
B
w8599
144929 >= 25*xabs
25*xabs = 144929
A
w8600
144938 >= 25*xabs
25*xabs = 144938
B
w8601
144941 >= 25*xabs
25*xabs = 144941
A
w8602
144956 >= 25*xabs
25*xabs = 144956
B
w8603
29106 >= 5*xabs
5*xabs = 29106
A
w8604
145536 >= 25*xabs
25*xabs = 145536
B
w8605
145542 >= 25*xabs
25*xabs = 145542
A
w8606
145549 >= 25*xabs
25*xabs = 145549
B
w8607
145554 >= 25*xabs
25*xabs = 145554
A
w8608
145561 >= 25*xabs
25*xabs = 145561
B
w8609
145566 >= 25*xabs
25*xabs = 145566
A
w8610
145574 >= 25*xabs
25*xabs = 145574
B
w8611
145578 >= 25*xabs
25*xabs = 145578
A
w8612
145586 >= 25*xabs
25*xabs = 145586
B
w8613
145591 >= 25*xabs
25*xabs = 145591
A
w8614
145598 >= 25*xabs

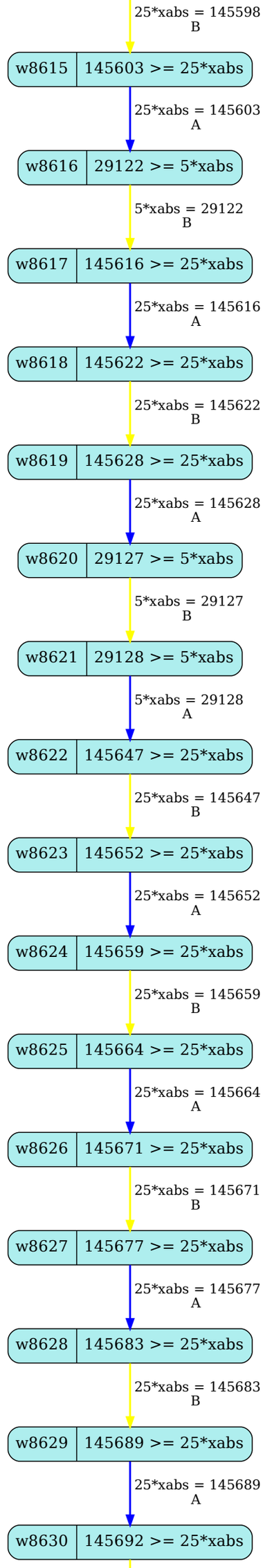
25*xabs = 145598
B
w8615
145603 >= 25*xabs
25*xabs = 145603
A
w8616
29122 >= 5*xabs
5*xabs = 29122
B
w8617
145616 >= 25*xabs
25*xabs = 145616
A
w8618
145622 >= 25*xabs
25*xabs = 145622
B
w8619
145628 >= 25*xabs
25*xabs = 145628
A
w8620
29127 >= 5*xabs
5*xabs = 29127
B
w8621
29128 >= 5*xabs
5*xabs = 29128
A
w8622
145647 >= 25*xabs
25*xabs = 145647
B
w8623
145652 >= 25*xabs
25*xabs = 145652
A
w8624
145659 >= 25*xabs
25*xabs = 145659
B
w8625
145664 >= 25*xabs
25*xabs = 145664
A
w8626
145671 >= 25*xabs
25*xabs = 145671
B
w8627
145677 >= 25*xabs
25*xabs = 145677
A
w8628
145683 >= 25*xabs
25*xabs = 145683
B
w8629
145689 >= 25*xabs
25*xabs = 145689
A
w8630
145692 >= 25*xabs

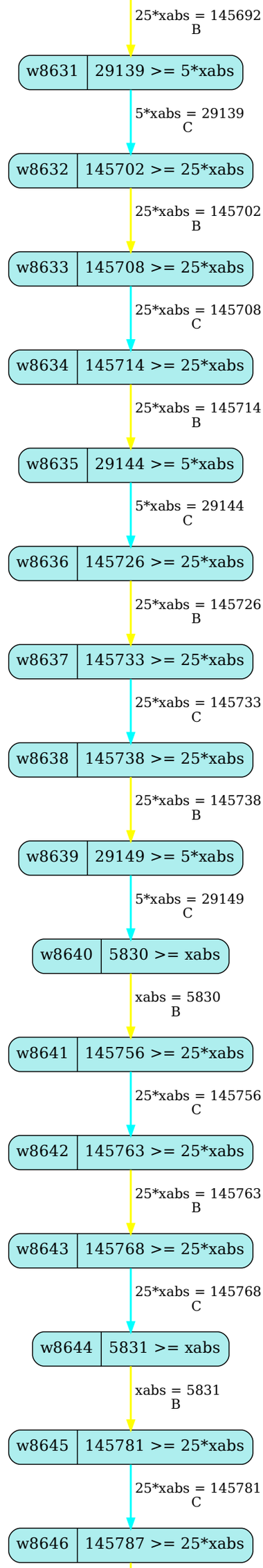
25*xabs = 145692
B
w8631
29139 >= 5*xabs
5*xabs = 29139
C
w8632
145702 >= 25*xabs
25*xabs = 145702
B
w8633
145708 >= 25*xabs
25*xabs = 145708
C
w8634
145714 >= 25*xabs
25*xabs = 145714
B
w8635
29144 >= 5*xabs
5*xabs = 29144
C
w8636
145726 >= 25*xabs
25*xabs = 145726
B
w8637
145733 >= 25*xabs
25*xabs = 145733
C
w8638
145738 >= 25*xabs
25*xabs = 145738
B
w8639
29149 >= 5*xabs
5*xabs = 29149
C
w8640
5830 >= xabs
xabs = 5830
B
w8641
145756 >= 25*xabs
25*xabs = 145756
C
w8642
145763 >= 25*xabs
25*xabs = 145763
B
w8643
145768 >= 25*xabs
25*xabs = 145768
C
w8644
5831 >= xabs
xabs = 5831
B
w8645
145781 >= 25*xabs
25*xabs = 145781
C
w8646
145787 >= 25*xabs

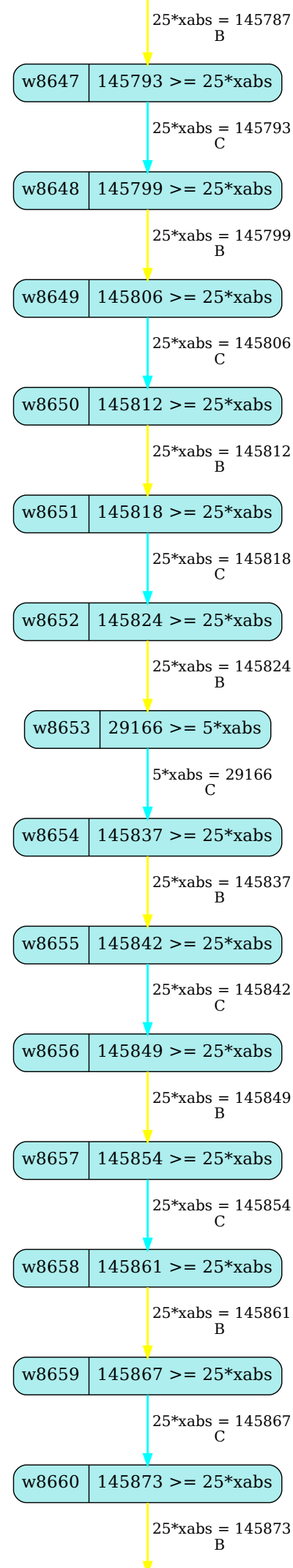
25*xabs = 145787
B
w8647
145793 >= 25*xabs
25*xabs = 145793
C
w8648
145799 >= 25*xabs
25*xabs = 145799
B
w8649
145806 >= 25*xabs
25*xabs = 145806
C
w8650
145812 >= 25*xabs
25*xabs = 145812
B
w8651
145818 >= 25*xabs
25*xabs = 145818
C
w8652
145824 >= 25*xabs
25*xabs = 145824
B
w8653
29166 >= 5*xabs
5*xabs = 29166
C
w8654
145837 >= 25*xabs
25*xabs = 145837
B
w8655
145842 >= 25*xabs
25*xabs = 145842
C
w8656
145849 >= 25*xabs
25*xabs = 145849
B
w8657
145854 >= 25*xabs
25*xabs = 145854
C
w8658
145861 >= 25*xabs
25*xabs = 145861
B
w8659
145867 >= 25*xabs
25*xabs = 145867
C
w8660
145873 >= 25*xabs
25*xabs = 145873
B

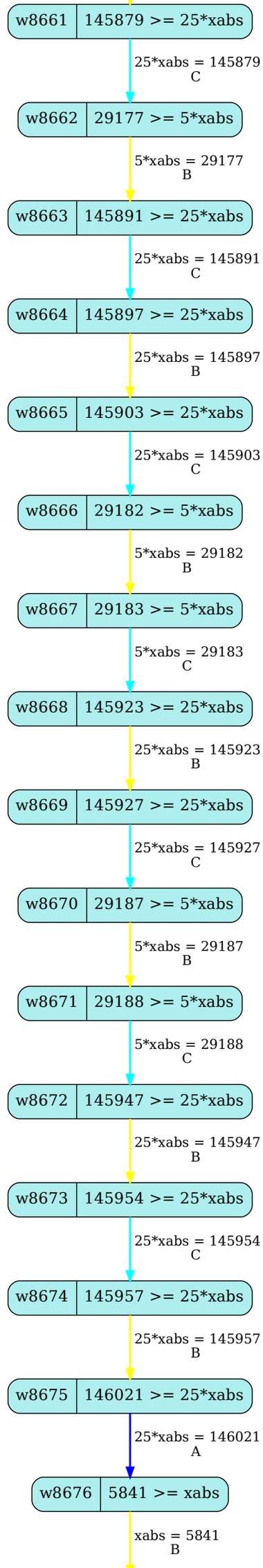
w8661
145879 >= 25*xabs
25*xabs = 145879
C
w8662
29177 >= 5*xabs
5*xabs = 29177
B
w8663
145891 >= 25*xabs
25*xabs = 145891
C
w8664
145897 >= 25*xabs
25*xabs = 145897
B
w8665
145903 >= 25*xabs
25*xabs = 145903
C
w8666
29182 >= 5*xabs
5*xabs = 29182
B
w8667
29183 >= 5*xabs
5*xabs = 29183
C
w8668
145923 >= 25*xabs
25*xabs = 145923
B
w8669
145927 >= 25*xabs
25*xabs = 145927
C
w8670
29187 >= 5*xabs
5*xabs = 29187
B
w8671
29188 >= 5*xabs
5*xabs = 29188
C
w8672
145947 >= 25*xabs
25*xabs = 145947
B
w8673
145954 >= 25*xabs
25*xabs = 145954
C
w8674
145957 >= 25*xabs
25*xabs = 145957
B
w8675
146021 >= 25*xabs
25*xabs = 146021
A
w8676
5841 >= xabs
xabs = 5841
B

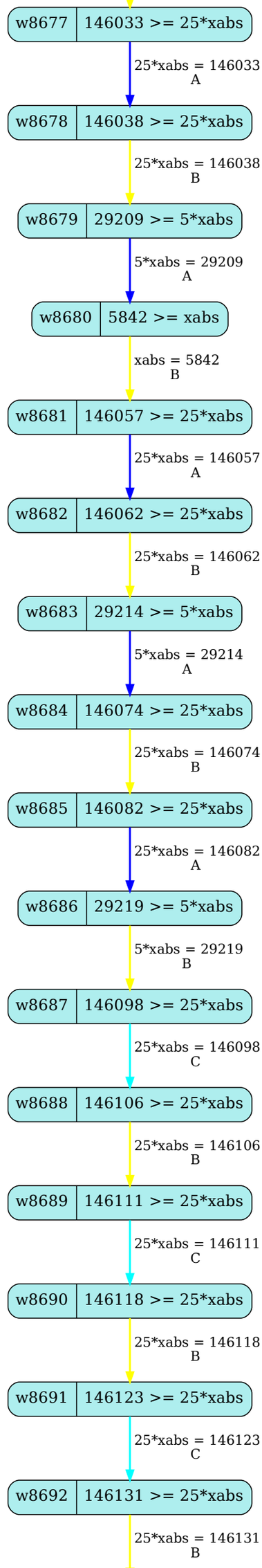
w8677
146033 >= 25*xabs
25*xabs = 146033
A
w8678
146038 >= 25*xabs
25*xabs = 146038
B
w8679
29209 >= 5*xabs
5*xabs = 29209
A
w8680
5842 >= xabs
xabs = 5842
B
w8681
146057 >= 25*xabs
25*xabs = 146057
A
w8682
146062 >= 25*xabs
25*xabs = 146062
B
w8683
29214 >= 5*xabs
5*xabs = 29214
A
w8684
146074 >= 25*xabs
25*xabs = 146074
B
w8685
146082 >= 25*xabs
25*xabs = 146082
A
w8686
29219 >= 5*xabs
5*xabs = 29219
B
w8687
146098 >= 25*xabs
25*xabs = 146098
C
w8688
146106 >= 25*xabs
25*xabs = 146106
B
w8689
146111 >= 25*xabs
25*xabs = 146111
C
w8690
146118 >= 25*xabs
25*xabs = 146118
B
w8691
146123 >= 25*xabs
25*xabs = 146123
C
w8692
146131 >= 25*xabs
25*xabs = 146131
B

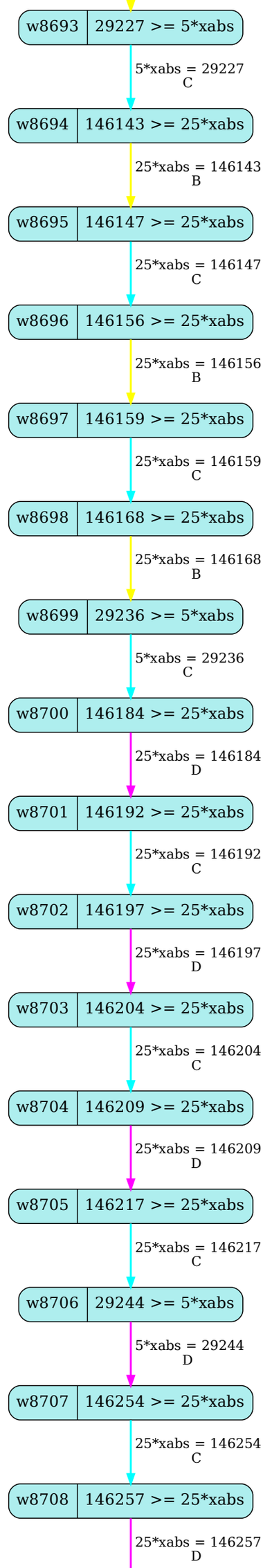
w8693
29227 >= 5*xabs
5*xabs = 29227
C
w8694
146143 >= 25*xabs
25*xabs = 146143
B
w8695
146147 >= 25*xabs
25*xabs = 146147
C
w8696
146156 >= 25*xabs
25*xabs = 146156
B
w8697
146159 >= 25*xabs
25*xabs = 146159
C
w8698
146168 >= 25*xabs
25*xabs = 146168
B
w8699
29236 >= 5*xabs
5*xabs = 29236
C
w8700
146184 >= 25*xabs
25*xabs = 146184
D
w8701
146192 >= 25*xabs
25*xabs = 146192
C
w8702
146197 >= 25*xabs
25*xabs = 146197
D
w8703
146204 >= 25*xabs
25*xabs = 146204
C
w8704
146209 >= 25*xabs
25*xabs = 146209
D
w8705
146217 >= 25*xabs
25*xabs = 146217
C
w8706
29244 >= 5*xabs
5*xabs = 29244
D
w8707
146254 >= 25*xabs
25*xabs = 146254
C
w8708
146257 >= 25*xabs
25*xabs = 146257
D

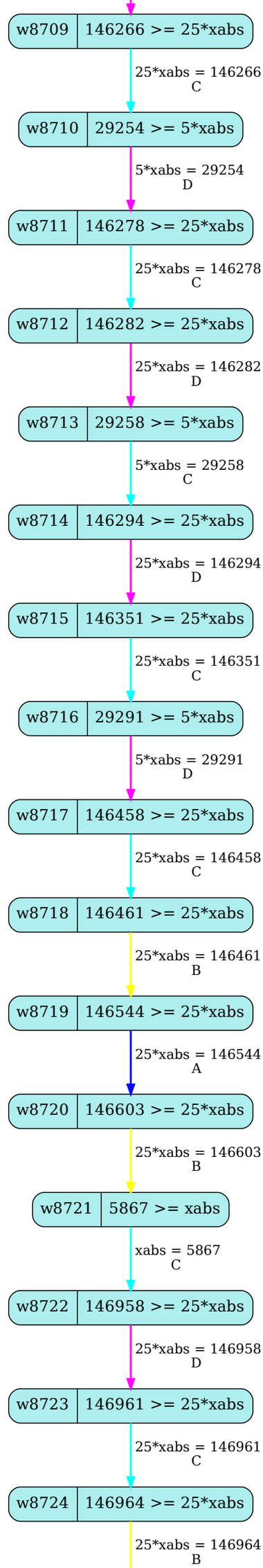
w8709
146266 >= 25*xabs
25*xabs = 146266
C
w8710
29254 >= 5*xabs
5*xabs = 29254
D
w8711
146278 >= 25*xabs
25*xabs = 146278
C
w8712
146282 >= 25*xabs
25*xabs = 146282
D
w8713
29258 >= 5*xabs
5*xabs = 29258
C
w8714
146294 >= 25*xabs
25*xabs = 146294
D
w8715
146351 >= 25*xabs
25*xabs = 146351
C
w8716
29291 >= 5*xabs
5*xabs = 29291
D
w8717
146458 >= 25*xabs
25*xabs = 146458
C
w8718
146461 >= 25*xabs
25*xabs = 146461
B
w8719
146544 >= 25*xabs
25*xabs = 146544
A
w8720
146603 >= 25*xabs
25*xabs = 146603
B
w8721
5867 >= xabs
xabs = 5867
C
w8722
146958 >= 25*xabs
25*xabs = 146958
D
w8723
146961 >= 25*xabs
25*xabs = 146961
C
w8724
146964 >= 25*xabs
25*xabs = 146964
B

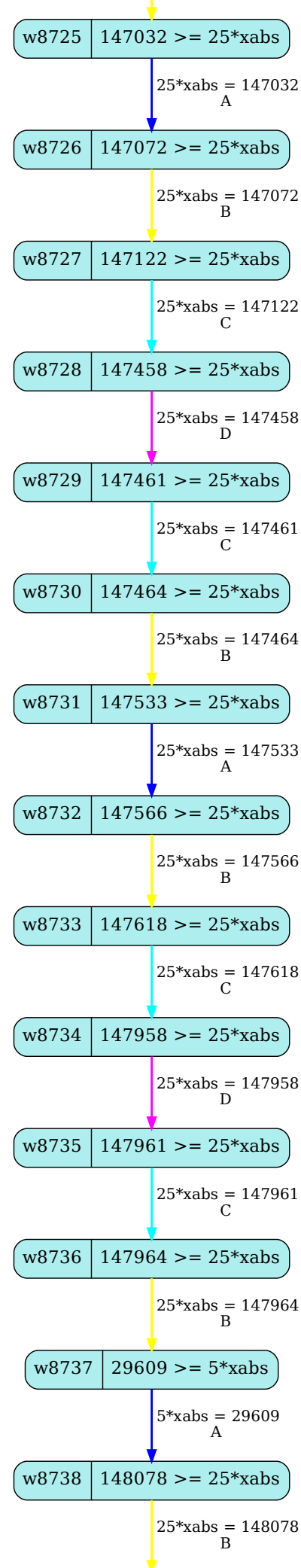
w8725
147032 >= 25*xabs
25*xabs = 147032
A
w8726
147072 >= 25*xabs
25*xabs = 147072
B
w8727
147122 >= 25*xabs
25*xabs = 147122
C
w8728
147458 >= 25*xabs
25*xabs = 147458
D
w8729
147461 >= 25*xabs
25*xabs = 147461
C
w8730
147464 >= 25*xabs
25*xabs = 147464
B
w8731
147533 >= 25*xabs
25*xabs = 147533
A
w8732
147566 >= 25*xabs
25*xabs = 147566
B
w8733
147618 >= 25*xabs
25*xabs = 147618
C
w8734
147958 >= 25*xabs
25*xabs = 147958
D
w8735
147961 >= 25*xabs
25*xabs = 147961
C
w8736
147964 >= 25*xabs
25*xabs = 147964
B
w8737
29609 >= 5*xabs
5*xabs = 29609
A
w8738
148078 >= 25*xabs
25*xabs = 148078
B

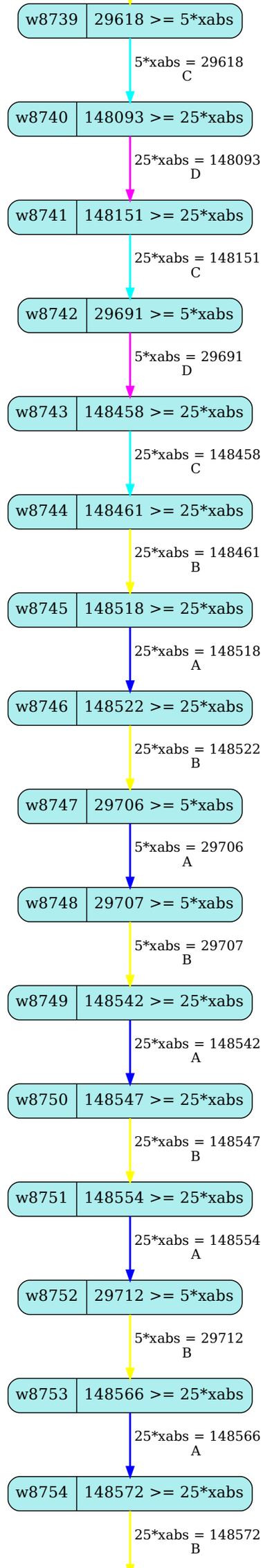
w8739
29618 >= 5*xabs
5*xabs = 29618
C
w8740
148093 >= 25*xabs
25*xabs = 148093
D
w8741
148151 >= 25*xabs
25*xabs = 148151
C
w8742
29691 >= 5*xabs
5*xabs = 29691
D
w8743
148458 >= 25*xabs
25*xabs = 148458
C
w8744
148461 >= 25*xabs
25*xabs = 148461
B
w8745
148518 >= 25*xabs
25*xabs = 148518
A
w8746
148522 >= 25*xabs
25*xabs = 148522
B
w8747
29706 >= 5*xabs
5*xabs = 29706
A
w8748
29707 >= 5*xabs
5*xabs = 29707
B
w8749
148542 >= 25*xabs
25*xabs = 148542
A
w8750
148547 >= 25*xabs
25*xabs = 148547
B
w8751
148554 >= 25*xabs
25*xabs = 148554
A
w8752
29712 >= 5*xabs
5*xabs = 29712
B
w8753
148566 >= 25*xabs
25*xabs = 148566
A
w8754
148572 >= 25*xabs
25*xabs = 148572
B

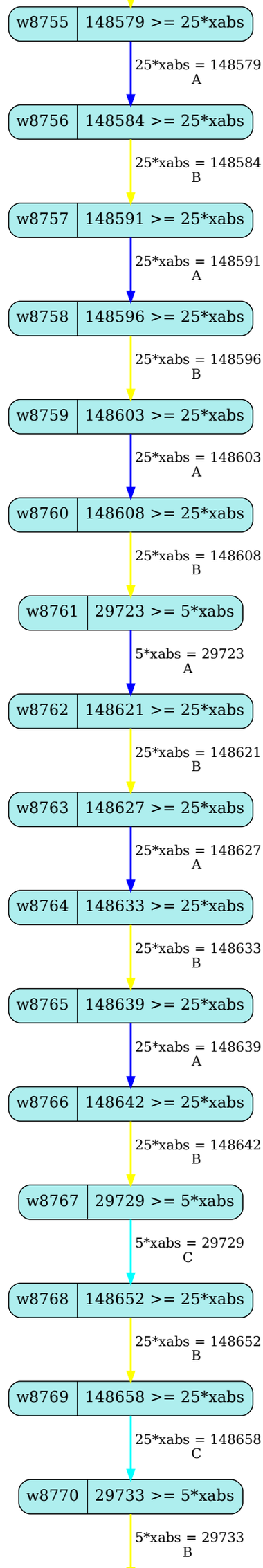
w8755
148579 >= 25*xabs
25*xabs = 148579
A
w8756
148584 >= 25*xabs
25*xabs = 148584
B
w8757
148591 >= 25*xabs
25*xabs = 148591
A
w8758
148596 >= 25*xabs
25*xabs = 148596
B
w8759
148603 >= 25*xabs
25*xabs = 148603
A
w8760
148608 >= 25*xabs
25*xabs = 148608
B
w8761
29723 >= 5*xabs
5*xabs = 29723
A
w8762
148621 >= 25*xabs
25*xabs = 148621
B
w8763
148627 >= 25*xabs
25*xabs = 148627
A
w8764
148633 >= 25*xabs
25*xabs = 148633
B
w8765
148639 >= 25*xabs
25*xabs = 148639
A
w8766
148642 >= 25*xabs
25*xabs = 148642
B
w8767
29729 >= 5*xabs
5*xabs = 29729
C
w8768
148652 >= 25*xabs
25*xabs = 148652
B
w8769
148658 >= 25*xabs
25*xabs = 148658
C
w8770
29733 >= 5*xabs
5*xabs = 29733
B

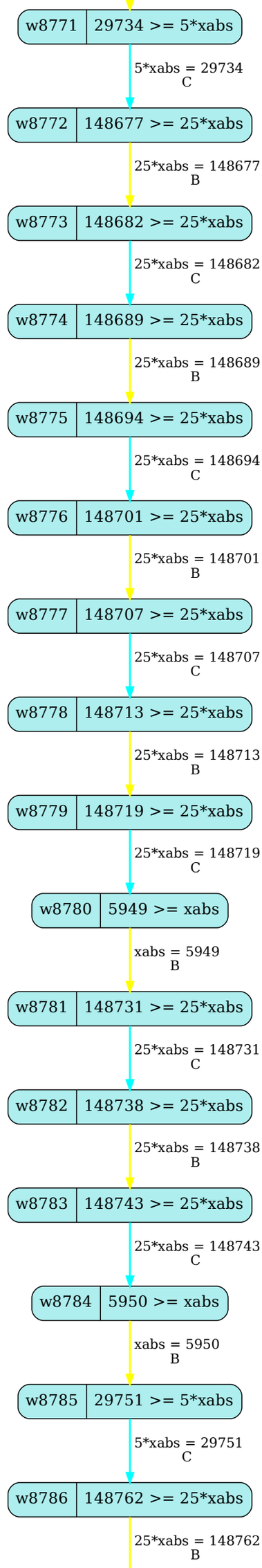
w8771
29734 >= 5*xabs
5*xabs = 29734
C
w8772
148677 >= 25*xabs
25*xabs = 148677
B
w8773
148682 >= 25*xabs
25*xabs = 148682
C
w8774
148689 >= 25*xabs
25*xabs = 148689
B
w8775
148694 >= 25*xabs
25*xabs = 148694
C
w8776
148701 >= 25*xabs
25*xabs = 148701
B
w8777
148707 >= 25*xabs
25*xabs = 148707
C
w8778
148713 >= 25*xabs
25*xabs = 148713
B
w8779
148719 >= 25*xabs
25*xabs = 148719
C
w8780
5949 >= xabs
xabs = 5949
B
w8781
148731 >= 25*xabs
25*xabs = 148731
C
w8782
148738 >= 25*xabs
25*xabs = 148738
B
w8783
148743 >= 25*xabs
25*xabs = 148743
C
w8784
5950 >= xabs
xabs = 5950
B
w8785
29751 >= 5*xabs
5*xabs = 29751
C
w8786
148762 >= 25*xabs
25*xabs = 148762
B

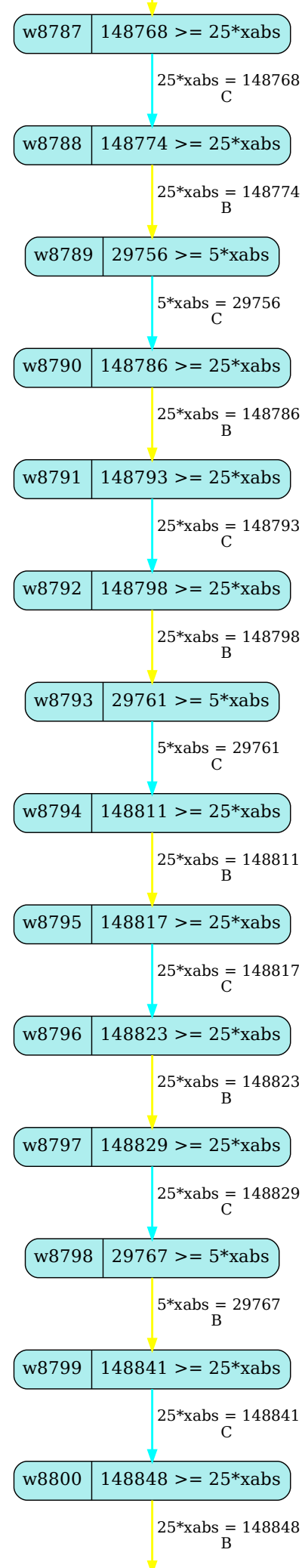
w8787
148768 >= 25*xabs
25*xabs = 148768
C
w8788
148774 >= 25*xabs
25*xabs = 148774
B
w8789
29756 >= 5*xabs
5*xabs = 29756
C
w8790
148786 >= 25*xabs
25*xabs = 148786
B
w8791
148793 >= 25*xabs
25*xabs = 148793
C
w8792
148798 >= 25*xabs
25*xabs = 148798
B
w8793
29761 >= 5*xabs
5*xabs = 29761
C
w8794
148811 >= 25*xabs
25*xabs = 148811
B
w8795
148817 >= 25*xabs
25*xabs = 148817
C
w8796
148823 >= 25*xabs
25*xabs = 148823
B
w8797
148829 >= 25*xabs
25*xabs = 148829
C
w8798
29767 >= 5*xabs
5*xabs = 29767
B
w8799
148841 >= 25*xabs
25*xabs = 148841
C
w8800
148848 >= 25*xabs
25*xabs = 148848
B

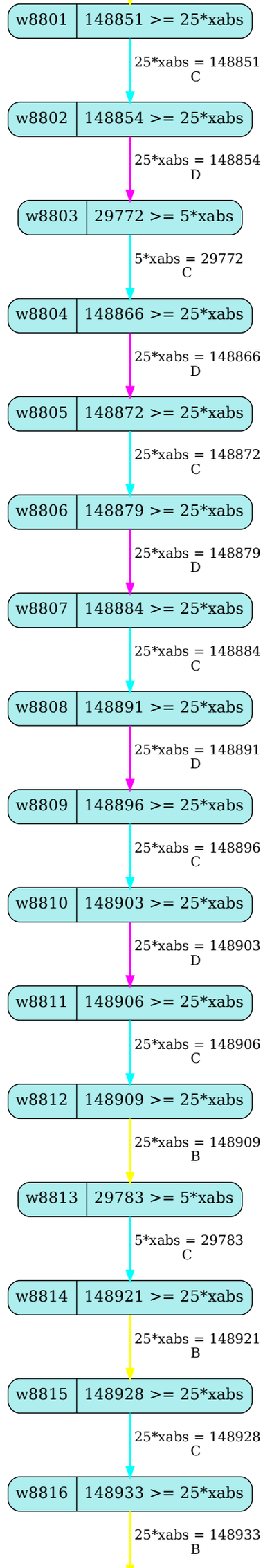
w8801
148851 >= 25*xabs
25*xabs = 148851
C
w8802
148854 >= 25*xabs
25*xabs = 148854
D
w8803
29772 >= 5*xabs
5*xabs = 29772
C
w8804
148866 >= 25*xabs
25*xabs = 148866
D
w8805
148872 >= 25*xabs
25*xabs = 148872
C
w8806
148879 >= 25*xabs
25*xabs = 148879
D
w8807
148884 >= 25*xabs
25*xabs = 148884
C
w8808
148891 >= 25*xabs
25*xabs = 148891
D
w8809
148896 >= 25*xabs
25*xabs = 148896
C
w8810
148903 >= 25*xabs
25*xabs = 148903
D
w8811
148906 >= 25*xabs
25*xabs = 148906
C
w8812
148909 >= 25*xabs
25*xabs = 148909
B
w8813
29783 >= 5*xabs
5*xabs = 29783
C
w8814
148921 >= 25*xabs
25*xabs = 148921
B
w8815
148928 >= 25*xabs
25*xabs = 148928
C
w8816
148933 >= 25*xabs
25*xabs = 148933
B

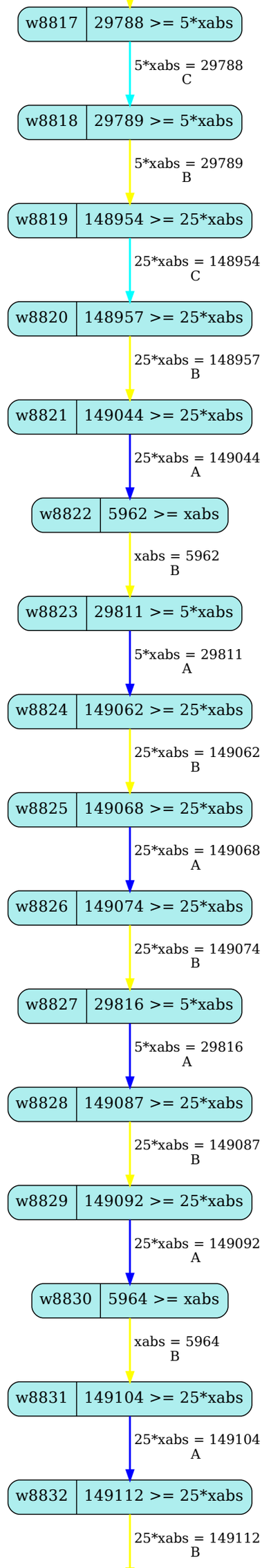
w8817
29788 >= 5*xabs
5*xabs = 29788
C
w8818
29789 >= 5*xabs
5*xabs = 29789
B
w8819
148954 >= 25*xabs
25*xabs = 148954
C
w8820
148957 >= 25*xabs
25*xabs = 148957
B
w8821
149044 >= 25*xabs
25*xabs = 149044
A
w8822
5962 >= xabs
xabs = 5962
B
w8823
29811 >= 5*xabs
5*xabs = 29811
A
w8824
149062 >= 25*xabs
25*xabs = 149062
B
w8825
149068 >= 25*xabs
25*xabs = 149068
A
w8826
149074 >= 25*xabs
25*xabs = 149074
B
w8827
29816 >= 5*xabs
5*xabs = 29816
A
w8828
149087 >= 25*xabs
25*xabs = 149087
B
w8829
149092 >= 25*xabs
25*xabs = 149092
A
w8830
5964 >= xabs
xabs = 5964
B
w8831
149104 >= 25*xabs
25*xabs = 149104
A
w8832
149112 >= 25*xabs
25*xabs = 149112
B

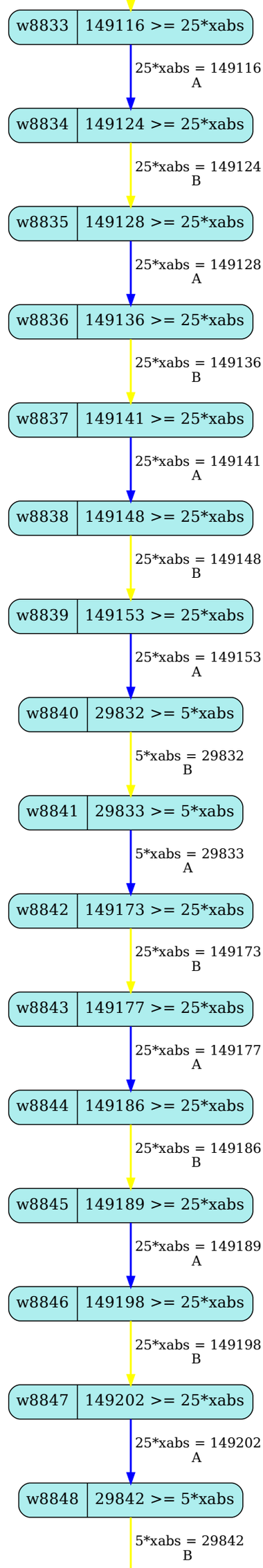
w8833
149116 >= 25*xabs
25*xabs = 149116
A
w8834
149124 >= 25*xabs
25*xabs = 149124
B
w8835
149128 >= 25*xabs
25*xabs = 149128
A
w8836
149136 >= 25*xabs
25*xabs = 149136
B
w8837
149141 >= 25*xabs
25*xabs = 149141
A
w8838
149148 >= 25*xabs
25*xabs = 149148
B
w8839
149153 >= 25*xabs
25*xabs = 149153
A
w8840
29832 >= 5*xabs
5*xabs = 29832
B
w8841
29833 >= 5*xabs
5*xabs = 29833
A
w8842
149173 >= 25*xabs
25*xabs = 149173
B
w8843
149177 >= 25*xabs
25*xabs = 149177
A
w8844
149186 >= 25*xabs
25*xabs = 149186
B
w8845
149189 >= 25*xabs
25*xabs = 149189
A
w8846
149198 >= 25*xabs
25*xabs = 149198
B
w8847
149202 >= 25*xabs
25*xabs = 149202
A
w8848
29842 >= 5*xabs
5*xabs = 29842
B

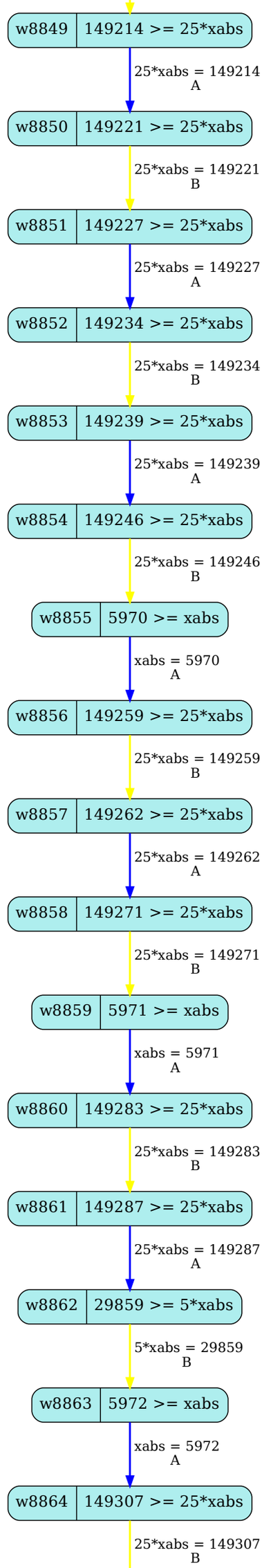
w8849
149214 >= 25*xabs
25*xabs = 149214
A
w8850
149221 >= 25*xabs
25*xabs = 149221
B
w8851
149227 >= 25*xabs
25*xabs = 149227
A
w8852
149234 >= 25*xabs
25*xabs = 149234
B
w8853
149239 >= 25*xabs
25*xabs = 149239
A
w8854
149246 >= 25*xabs
25*xabs = 149246
B
w8855
5970 >= xabs
xabs = 5970
A
w8856
149259 >= 25*xabs
25*xabs = 149259
B
w8857
149262 >= 25*xabs
25*xabs = 149262
A
w8858
149271 >= 25*xabs
25*xabs = 149271
B
w8859
5971 >= xabs
xabs = 5971
A
w8860
149283 >= 25*xabs
25*xabs = 149283
B
w8861
149287 >= 25*xabs
25*xabs = 149287
A
w8862
29859 >= 5*xabs
5*xabs = 29859
B
w8863
5972 >= xabs
xabs = 5972
A
w8864
149307 >= 25*xabs
25*xabs = 149307
B

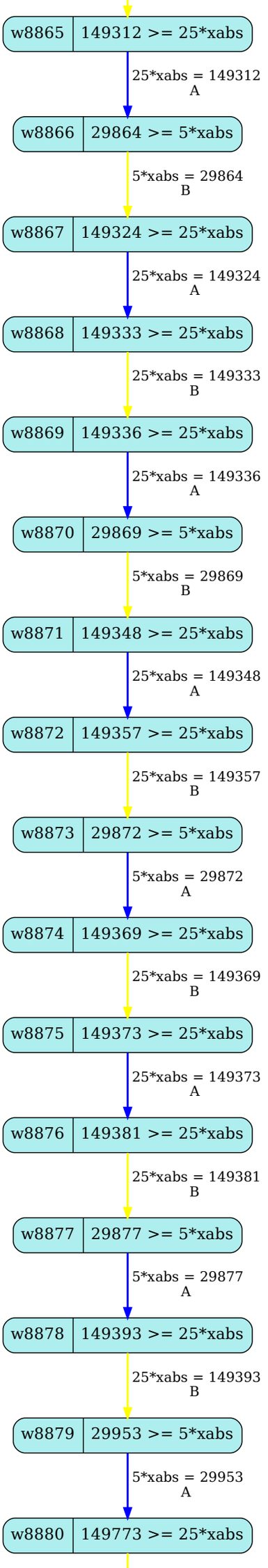
w8865
149312 >= 25*xabs
25*xabs = 149312
A
w8866
29864 >= 5*xabs
5*xabs = 29864
B
w8867
149324 >= 25*xabs
25*xabs = 149324
A
w8868
149333 >= 25*xabs
25*xabs = 149333
B
w8869
149336 >= 25*xabs
25*xabs = 149336
A
w8870
29869 >= 5*xabs
5*xabs = 29869
B
w8871
149348 >= 25*xabs
25*xabs = 149348
A
w8872
149357 >= 25*xabs
25*xabs = 149357
B
w8873
29872 >= 5*xabs
5*xabs = 29872
A
w8874
149369 >= 25*xabs
25*xabs = 149369
B
w8875
149373 >= 25*xabs
25*xabs = 149373
A
w8876
149381 >= 25*xabs
25*xabs = 149381
B
w8877
29877 >= 5*xabs
5*xabs = 29877
A
w8878
149393 >= 25*xabs
25*xabs = 149393
B
w8879
29953 >= 5*xabs
5*xabs = 29953
A
w8880
149773 >= 25*xabs

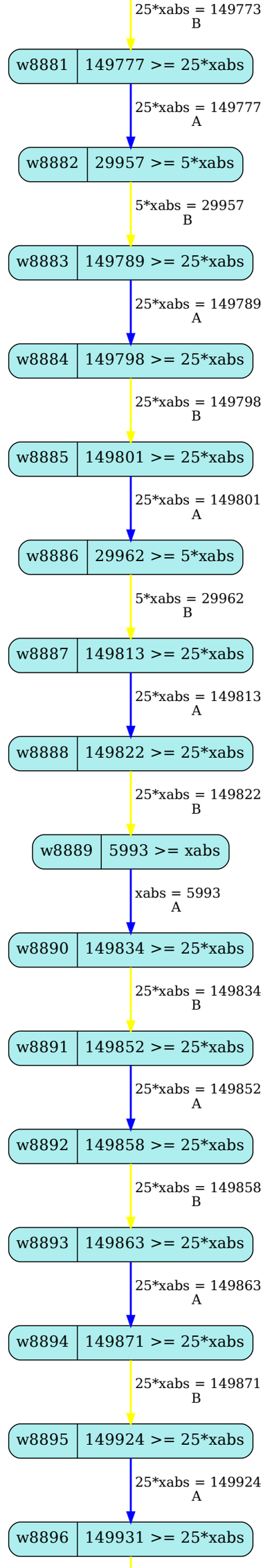
25*xabs = 149773
B
w8881
149777 >= 25*xabs
25*xabs = 149777
A
w8882
29957 >= 5*xabs
5*xabs = 29957
B
w8883
149789 >= 25*xabs
25*xabs = 149789
A
w8884
149798 >= 25*xabs
25*xabs = 149798
B
w8885
149801 >= 25*xabs
25*xabs = 149801
A
w8886
29962 >= 5*xabs
5*xabs = 29962
B
w8887
149813 >= 25*xabs
25*xabs = 149813
A
w8888
149822 >= 25*xabs
25*xabs = 149822
B
w8889
5993 >= xabs
xabs = 5993
A
w8890
149834 >= 25*xabs
25*xabs = 149834
B
w8891
149852 >= 25*xabs
25*xabs = 149852
A
w8892
149858 >= 25*xabs
25*xabs = 149858
B
w8893
149863 >= 25*xabs
25*xabs = 149863
A
w8894
149871 >= 25*xabs
25*xabs = 149871
B
w8895
149924 >= 25*xabs
25*xabs = 149924
A
w8896
149931 >= 25*xabs

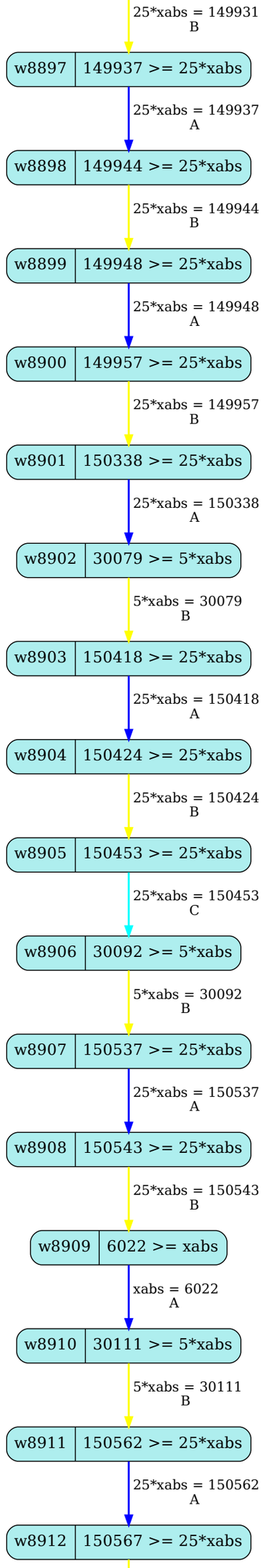
25*xabs = 149931
B
w8897
149937 >= 25*xabs
25*xabs = 149937
A
w8898
149944 >= 25*xabs
25*xabs = 149944
B
w8899
149948 >= 25*xabs
25*xabs = 149948
A
w8900
149957 >= 25*xabs
25*xabs = 149957
B
w8901
150338 >= 25*xabs
25*xabs = 150338
A
w8902
30079 >= 5*xabs
5*xabs = 30079
B
w8903
150418 >= 25*xabs
25*xabs = 150418
A
w8904
150424 >= 25*xabs
25*xabs = 150424
B
w8905
150453 >= 25*xabs
25*xabs = 150453
C
w8906
30092 >= 5*xabs
5*xabs = 30092
B
w8907
150537 >= 25*xabs
25*xabs = 150537
A
w8908
150543 >= 25*xabs
25*xabs = 150543
B
w8909
6022 >= xabs
xabs = 6022
A
w8910
30111 >= 5*xabs
5*xabs = 30111
B
w8911
150562 >= 25*xabs
25*xabs = 150562
A
w8912
150567 >= 25*xabs

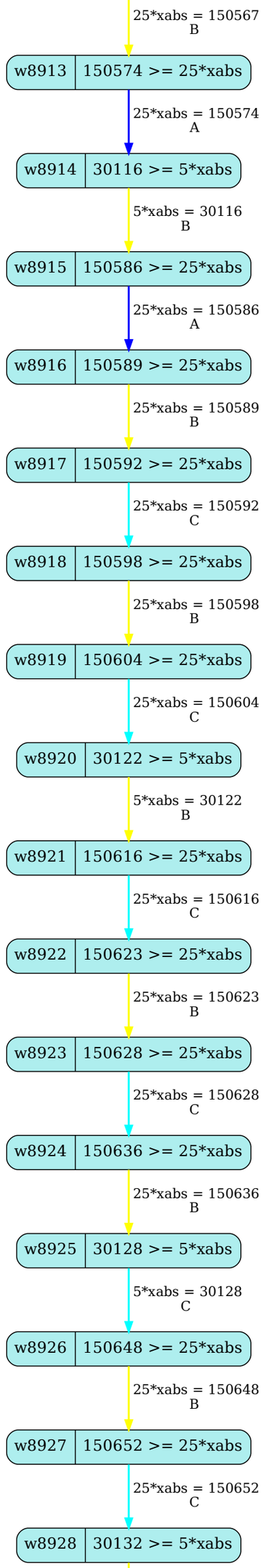
25*xabs = 150567
B
w8913
150574 >= 25*xabs
25*xabs = 150574
A
w8914
30116 >= 5*xabs
5*xabs = 30116
B
w8915
150586 >= 25*xabs
25*xabs = 150586
A
w8916
150589 >= 25*xabs
25*xabs = 150589
B
w8917
150592 >= 25*xabs
25*xabs = 150592
C
w8918
150598 >= 25*xabs
25*xabs = 150598
B
w8919
150604 >= 25*xabs
25*xabs = 150604
C
w8920
30122 >= 5*xabs
5*xabs = 30122
B
w8921
150616 >= 25*xabs
25*xabs = 150616
C
w8922
150623 >= 25*xabs
25*xabs = 150623
B
w8923
150628 >= 25*xabs
25*xabs = 150628
C
w8924
150636 >= 25*xabs
25*xabs = 150636
B
w8925
30128 >= 5*xabs
5*xabs = 30128
C
w8926
150648 >= 25*xabs
25*xabs = 150648
B
w8927
150652 >= 25*xabs
25*xabs = 150652
C
w8928
30132 >= 5*xabs

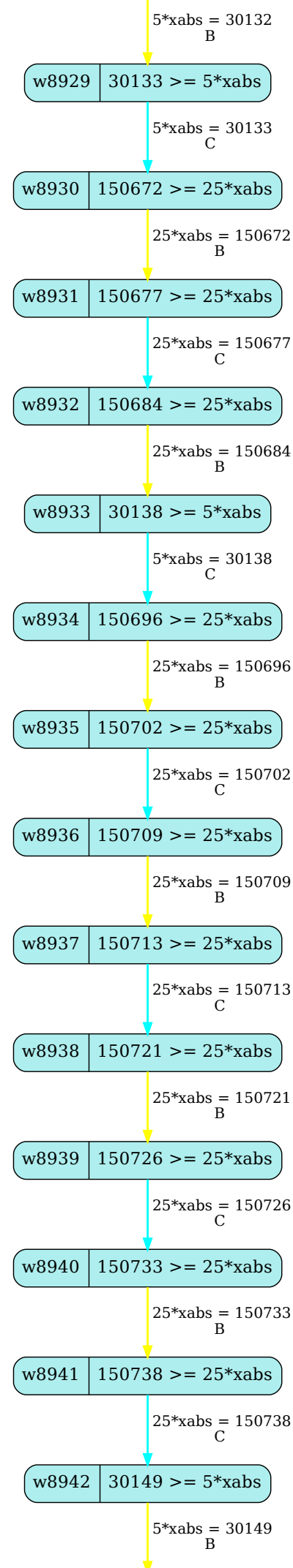
5*xabs = 30132
B
w8929
30133 >= 5*xabs
5*xabs = 30133
C
w8930
150672 >= 25*xabs
25*xabs = 150672
B
w8931
150677 >= 25*xabs
25*xabs = 150677
C
w8932
150684 >= 25*xabs
25*xabs = 150684
B
w8933
30138 >= 5*xabs
5*xabs = 30138
C
w8934
150696 >= 25*xabs
25*xabs = 150696
B
w8935
150702 >= 25*xabs
25*xabs = 150702
C
w8936
150709 >= 25*xabs
25*xabs = 150709
B
w8937
150713 >= 25*xabs
25*xabs = 150713
C
w8938
150721 >= 25*xabs
25*xabs = 150721
B
w8939
150726 >= 25*xabs
25*xabs = 150726
C
w8940
150733 >= 25*xabs
25*xabs = 150733
B
w8941
150738 >= 25*xabs
25*xabs = 150738
C
w8942
30149 >= 5*xabs
5*xabs = 30149
B

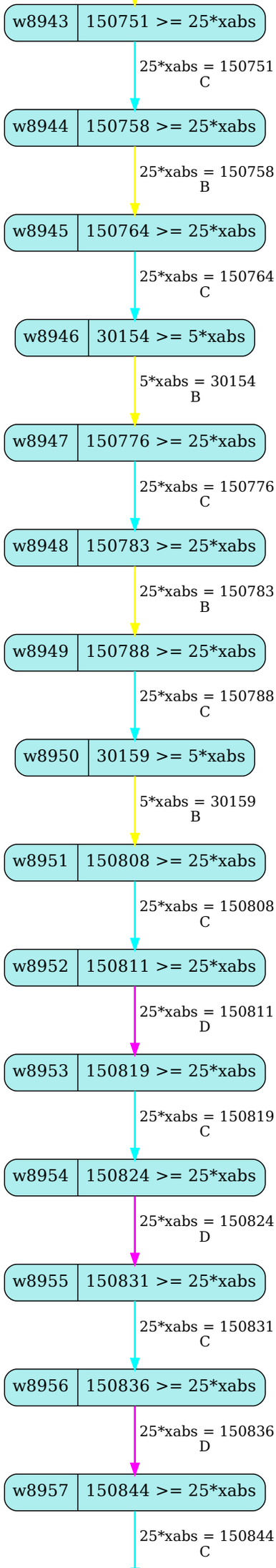
w8943
150751 >= 25*xabs
25*xabs = 150751
C
w8944
150758 >= 25*xabs
25*xabs = 150758
B
w8945
150764 >= 25*xabs
25*xabs = 150764
C
w8946
30154 >= 5*xabs
5*xabs = 30154
B
w8947
150776 >= 25*xabs
25*xabs = 150776
C
w8948
150783 >= 25*xabs
25*xabs = 150783
B
w8949
150788 >= 25*xabs
25*xabs = 150788
C
w8950
30159 >= 5*xabs
5*xabs = 30159
B
w8951
150808 >= 25*xabs
25*xabs = 150808
C
w8952
150811 >= 25*xabs
25*xabs = 150811
D
w8953
150819 >= 25*xabs
25*xabs = 150819
C
w8954
150824 >= 25*xabs
25*xabs = 150824
D
w8955
150831 >= 25*xabs
25*xabs = 150831
C
w8956
150836 >= 25*xabs
25*xabs = 150836
D
w8957
150844 >= 25*xabs
25*xabs = 150844
C

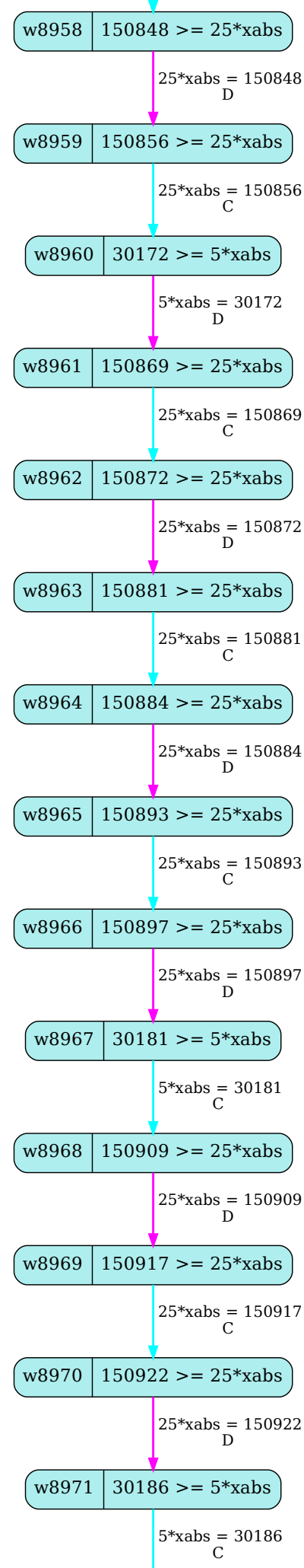
w8958
150848 >= 25*xabs
25*xabs = 150848
D
w8959
150856 >= 25*xabs
25*xabs = 150856
C
w8960
30172 >= 5*xabs
5*xabs = 30172
D
w8961
150869 >= 25*xabs
25*xabs = 150869
C
w8962
150872 >= 25*xabs
25*xabs = 150872
D
w8963
150881 >= 25*xabs
25*xabs = 150881
C
w8964
150884 >= 25*xabs
25*xabs = 150884
D
w8965
150893 >= 25*xabs
25*xabs = 150893
C
w8966
150897 >= 25*xabs
25*xabs = 150897
D
w8967
30181 >= 5*xabs
5*xabs = 30181
C
w8968
150909 >= 25*xabs
25*xabs = 150909
D
w8969
150917 >= 25*xabs
25*xabs = 150917
C
w8970
150922 >= 25*xabs
25*xabs = 150922
D
w8971
30186 >= 5*xabs
5*xabs = 30186
C

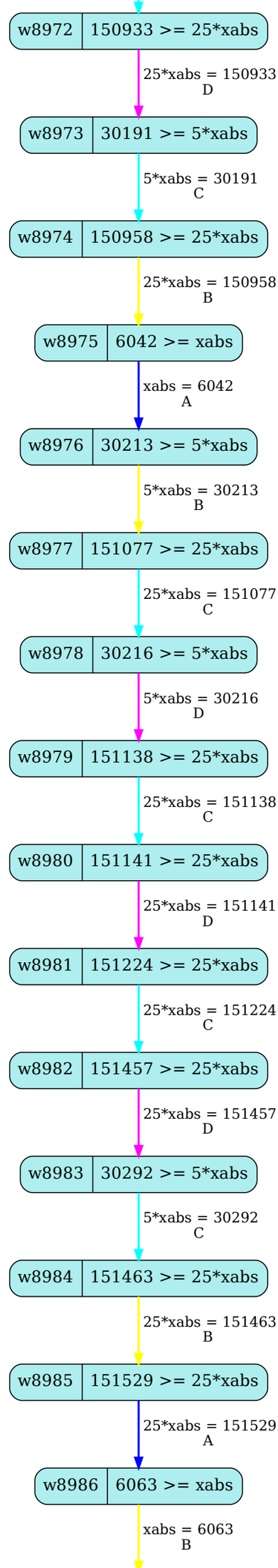
w8972
150933 >= 25*xabs
25*xabs = 150933
D
w8973
30191 >= 5*xabs
5*xabs = 30191
C
w8974
150958 >= 25*xabs
25*xabs = 150958
B
w8975
6042 >= xabs
xabs = 6042
A
w8976
30213 >= 5*xabs
5*xabs = 30213
B
w8977
151077 >= 25*xabs
25*xabs = 151077
C
w8978
30216 >= 5*xabs
5*xabs = 30216
D
w8979
151138 >= 25*xabs
25*xabs = 151138
C
w8980
151141 >= 25*xabs
25*xabs = 151141
D
w8981
151224 >= 25*xabs
25*xabs = 151224
C
w8982
151457 >= 25*xabs
25*xabs = 151457
D
w8983
30292 >= 5*xabs
5*xabs = 30292
C
w8984
151463 >= 25*xabs
25*xabs = 151463
B
w8985
151529 >= 25*xabs
25*xabs = 151529
A
w8986
6063 >= xabs
xabs = 6063
B

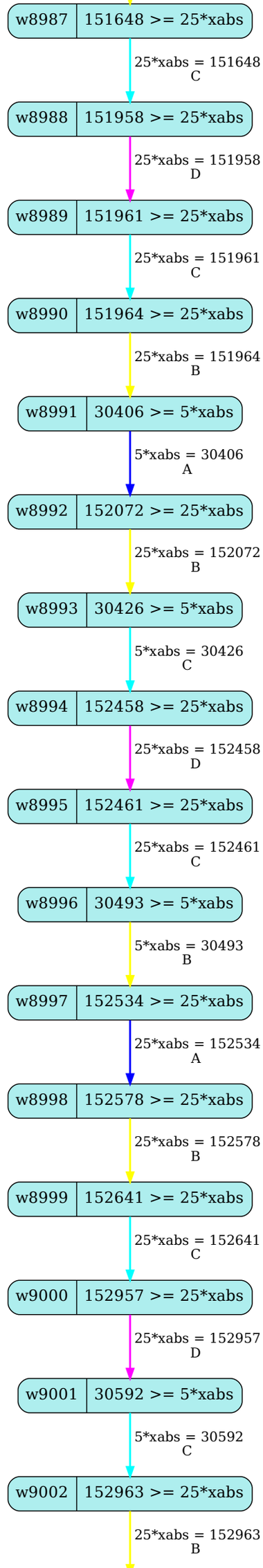
w8987
151648 >= 25*xabs
25*xabs = 151648
C
w8988
151958 >= 25*xabs
25*xabs = 151958
D
w8989
151961 >= 25*xabs
25*xabs = 151961
C
w8990
151964 >= 25*xabs
25*xabs = 151964
B
w8991
30406 >= 5*xabs
5*xabs = 30406
A
w8992
152072 >= 25*xabs
25*xabs = 152072
B
w8993
30426 >= 5*xabs
5*xabs = 30426
C
w8994
152458 >= 25*xabs
25*xabs = 152458
D
w8995
152461 >= 25*xabs
25*xabs = 152461
C
w8996
30493 >= 5*xabs
5*xabs = 30493
B
w8997
152534 >= 25*xabs
25*xabs = 152534
A
w8998
152578 >= 25*xabs
25*xabs = 152578
B
w8999
152641 >= 25*xabs
25*xabs = 152641
C
w9000
152957 >= 25*xabs
25*xabs = 152957
D
w9001
30592 >= 5*xabs
5*xabs = 30592
C
w9002
152963 >= 25*xabs
25*xabs = 152963
B

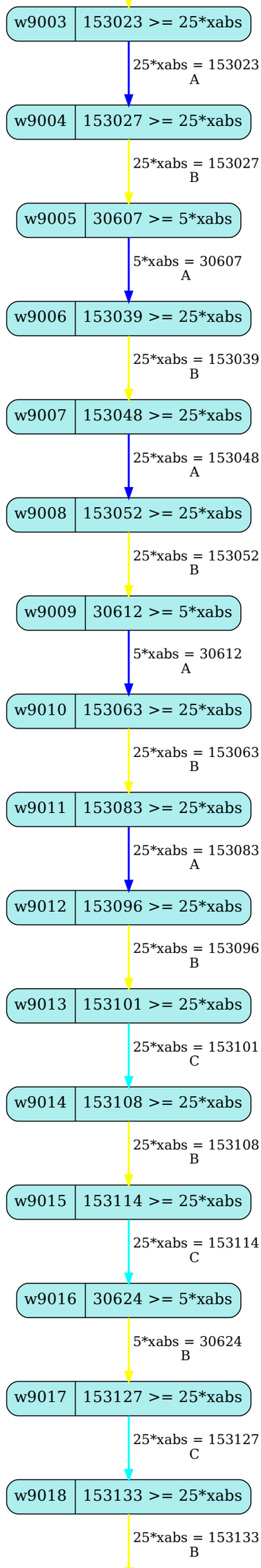
w9003
153023 >= 25*xabs
25*xabs = 153023
A
w9004
153027 >= 25*xabs
25*xabs = 153027
B
w9005
30607 >= 5*xabs
5*xabs = 30607
A
w9006
153039 >= 25*xabs
25*xabs = 153039
B
w9007
153048 >= 25*xabs
25*xabs = 153048
A
w9008
153052 >= 25*xabs
25*xabs = 153052
B
w9009
30612 >= 5*xabs
5*xabs = 30612
A
w9010
153063 >= 25*xabs
25*xabs = 153063
B
w9011
153083 >= 25*xabs
25*xabs = 153083
A
w9012
153096 >= 25*xabs
25*xabs = 153096
B
w9013
153101 >= 25*xabs
25*xabs = 153101
C
w9014
153108 >= 25*xabs
25*xabs = 153108
B
w9015
153114 >= 25*xabs
25*xabs = 153114
C
w9016
30624 >= 5*xabs
5*xabs = 30624
B
w9017
153127 >= 25*xabs
25*xabs = 153127
C
w9018
153133 >= 25*xabs
25*xabs = 153133
B

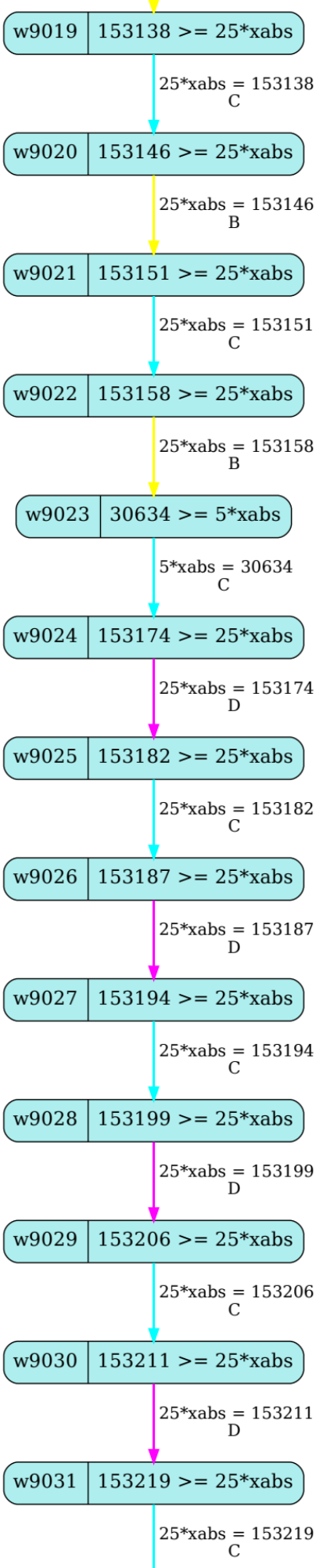
w9019
153138 >= 25*xabs
25*xabs = 153138
C
w9020
153146 >= 25*xabs
25*xabs = 153146
B
w9021
153151 >= 25*xabs
25*xabs = 153151
C
w9022
153158 >= 25*xabs
25*xabs = 153158
B
w9023
30634 >= 5*xabs
5*xabs = 30634
C
w9024
153174 >= 25*xabs
25*xabs = 153174
D
w9025
153182 >= 25*xabs
25*xabs = 153182
C
w9026
153187 >= 25*xabs
25*xabs = 153187
D
w9027
153194 >= 25*xabs
25*xabs = 153194
C
w9028
153199 >= 25*xabs
25*xabs = 153199
D
w9029
153206 >= 25*xabs
25*xabs = 153206
C
w9030
153211 >= 25*xabs
25*xabs = 153211
D
w9031
153219 >= 25*xabs
25*xabs = 153219
C

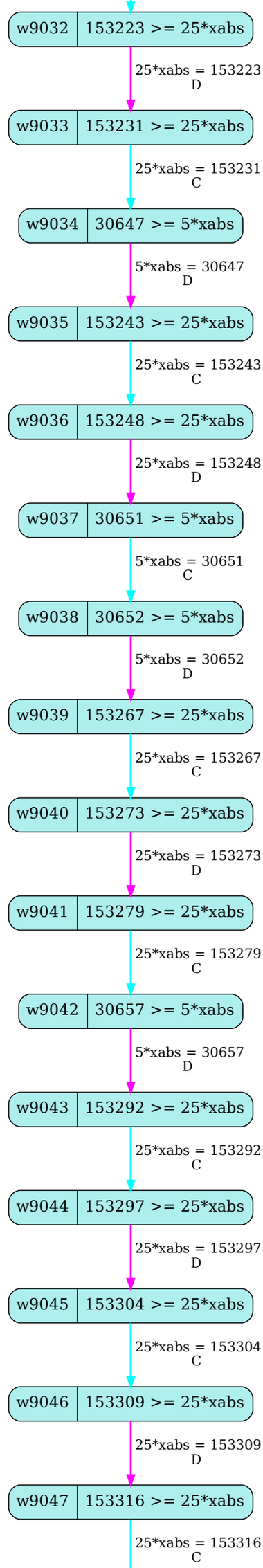
w9032
153223 >= 25*xabs
25*xabs = 153223
D
w9033
153231 >= 25*xabs
25*xabs = 153231
C
w9034
30647 >= 5*xabs
5*xabs = 30647
D
w9035
153243 >= 25*xabs
25*xabs = 153243
C
w9036
153248 >= 25*xabs
25*xabs = 153248
D
w9037
30651 >= 5*xabs
5*xabs = 30651
C
w9038
30652 >= 5*xabs
5*xabs = 30652
D
w9039
153267 >= 25*xabs
25*xabs = 153267
C
w9040
153273 >= 25*xabs
25*xabs = 153273
D
w9041
153279 >= 25*xabs
25*xabs = 153279
C
w9042
30657 >= 5*xabs
5*xabs = 30657
D
w9043
153292 >= 25*xabs
25*xabs = 153292
C
w9044
153297 >= 25*xabs
25*xabs = 153297
D
w9045
153304 >= 25*xabs
25*xabs = 153304
C
w9046
153309 >= 25*xabs
25*xabs = 153309
D
w9047
153316 >= 25*xabs
25*xabs = 153316
C

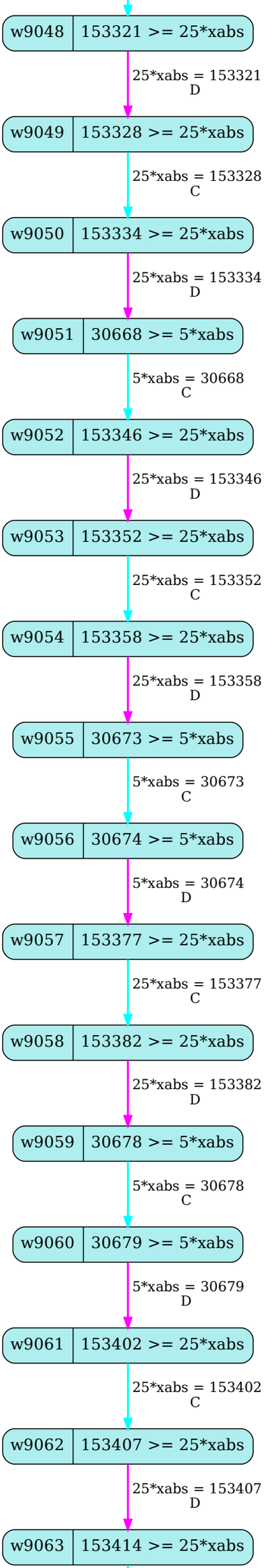
w9048
153321 >= 25*xabs
25*xabs = 153321
D
w9049
153328 >= 25*xabs
25*xabs = 153328
C
w9050
153334 >= 25*xabs
25*xabs = 153334
D
w9051
30668 >= 5*xabs
5*xabs = 30668
C
w9052
153346 >= 25*xabs
25*xabs = 153346
D
w9053
153352 >= 25*xabs
25*xabs = 153352
C
w9054
153358 >= 25*xabs
25*xabs = 153358
D
w9055
30673 >= 5*xabs
5*xabs = 30673
C
w9056
30674 >= 5*xabs
5*xabs = 30674
D
w9057
153377 >= 25*xabs
25*xabs = 153377
C
w9058
153382 >= 25*xabs
25*xabs = 153382
D
w9059
30678 >= 5*xabs
5*xabs = 30678
C
w9060
30679 >= 5*xabs
5*xabs = 30679
D
w9061
153402 >= 25*xabs
25*xabs = 153402
C
w9062
153407 >= 25*xabs
25*xabs = 153407
D
w9063
153414 >= 25*xabs

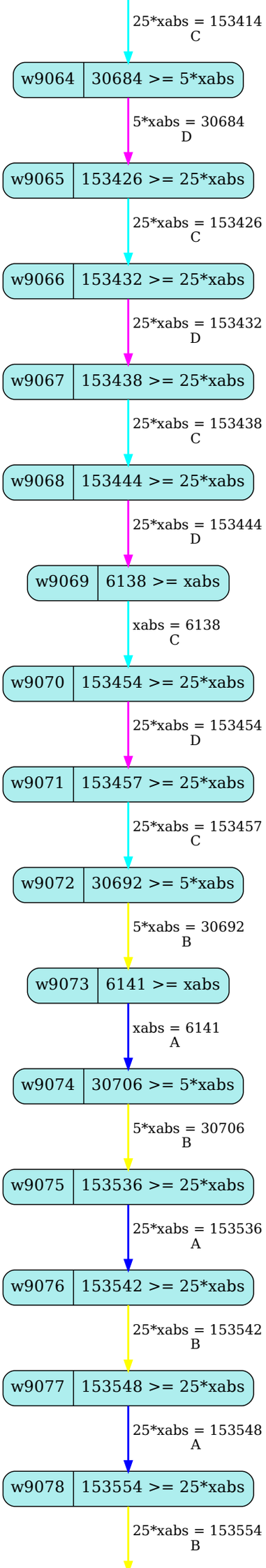
25*xabs = 153414
C
w9064
30684 >= 5*xabs
5*xabs = 30684
D
w9065
153426 >= 25*xabs
25*xabs = 153426
C
w9066
153432 >= 25*xabs
25*xabs = 153432
D
w9067
153438 >= 25*xabs
25*xabs = 153438
C
w9068
153444 >= 25*xabs
25*xabs = 153444
D
w9069
6138 >= xabs
xabs = 6138
C
w9070
153454 >= 25*xabs
25*xabs = 153454
D
w9071
153457 >= 25*xabs
25*xabs = 153457
C
w9072
30692 >= 5*xabs
5*xabs = 30692
B
w9073
6141 >= xabs
xabs = 6141
A
w9074
30706 >= 5*xabs
5*xabs = 30706
B
w9075
153536 >= 25*xabs
25*xabs = 153536
A
w9076
153542 >= 25*xabs
25*xabs = 153542
B
w9077
153548 >= 25*xabs
25*xabs = 153548
A
w9078
153554 >= 25*xabs
25*xabs = 153554
B

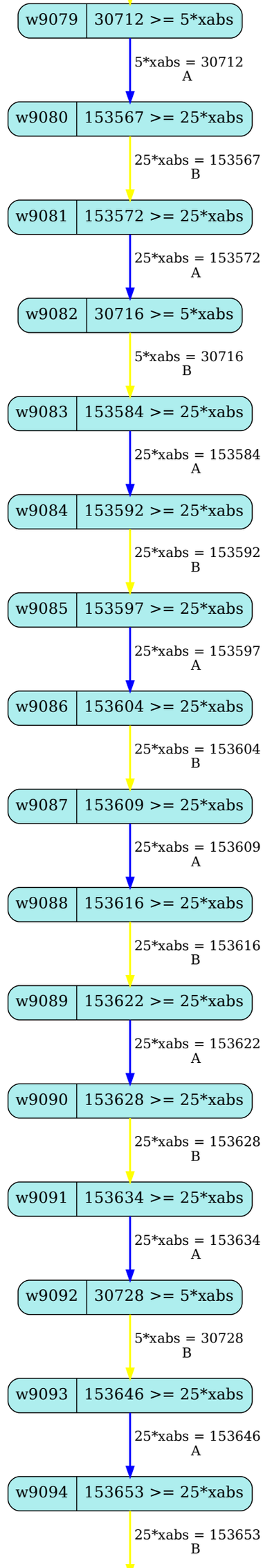
w9079
30712 >= 5*xabs
5*xabs = 30712
A
w9080
153567 >= 25*xabs
25*xabs = 153567
B
w9081
153572 >= 25*xabs
25*xabs = 153572
A
w9082
30716 >= 5*xabs
5*xabs = 30716
B
w9083
153584 >= 25*xabs
25*xabs = 153584
A
w9084
153592 >= 25*xabs
25*xabs = 153592
B
w9085
153597 >= 25*xabs
25*xabs = 153597
A
w9086
153604 >= 25*xabs
25*xabs = 153604
B
w9087
153609 >= 25*xabs
25*xabs = 153609
A
w9088
153616 >= 25*xabs
25*xabs = 153616
B
w9089
153622 >= 25*xabs
25*xabs = 153622
A
w9090
153628 >= 25*xabs
25*xabs = 153628
B
w9091
153634 >= 25*xabs
25*xabs = 153634
A
w9092
30728 >= 5*xabs
5*xabs = 30728
B
w9093
153646 >= 25*xabs
25*xabs = 153646
A
w9094
153653 >= 25*xabs
25*xabs = 153653
B

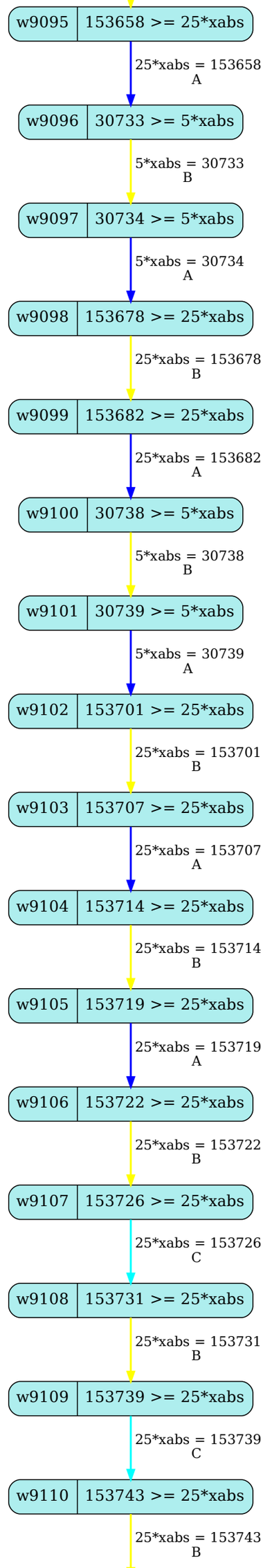
w9095
153658 >= 25*xabs
25*xabs = 153658
A
w9096
30733 >= 5*xabs
5*xabs = 30733
B
w9097
30734 >= 5*xabs
5*xabs = 30734
A
w9098
153678 >= 25*xabs
25*xabs = 153678
B
w9099
153682 >= 25*xabs
25*xabs = 153682
A
w9100
30738 >= 5*xabs
5*xabs = 30738
B
w9101
30739 >= 5*xabs
5*xabs = 30739
A
w9102
153701 >= 25*xabs
25*xabs = 153701
B
w9103
153707 >= 25*xabs
25*xabs = 153707
A
w9104
153714 >= 25*xabs
25*xabs = 153714
B
w9105
153719 >= 25*xabs
25*xabs = 153719
A
w9106
153722 >= 25*xabs
25*xabs = 153722
B
w9107
153726 >= 25*xabs
25*xabs = 153726
C
w9108
153731 >= 25*xabs
25*xabs = 153731
B
w9109
153739 >= 25*xabs
25*xabs = 153739
C
w9110
153743 >= 25*xabs
25*xabs = 153743
B

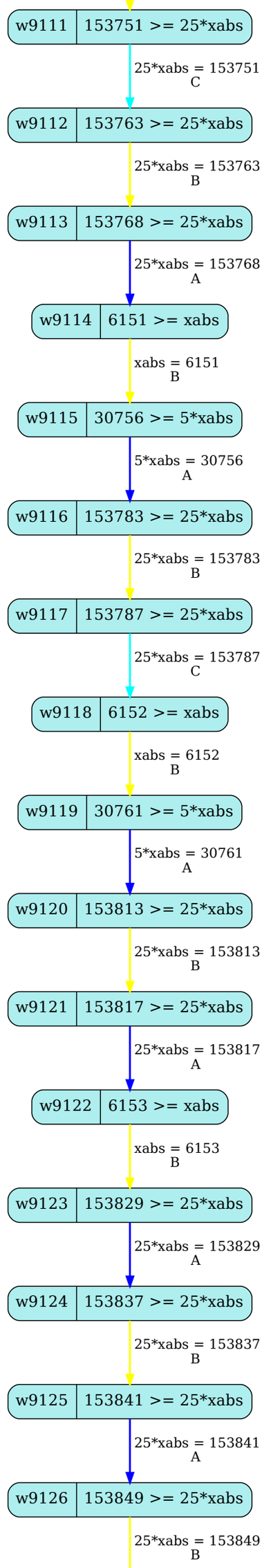
w9111
153751 >= 25*xabs
25*xabs = 153751
C
w9112
153763 >= 25*xabs
25*xabs = 153763
B
w9113
153768 >= 25*xabs
25*xabs = 153768
A
w9114
6151 >= xabs
xabs = 6151
B
w9115
30756 >= 5*xabs
5*xabs = 30756
A
w9116
153783 >= 25*xabs
25*xabs = 153783
B
w9117
153787 >= 25*xabs
25*xabs = 153787
C
w9118
6152 >= xabs
xabs = 6152
B
w9119
30761 >= 5*xabs
5*xabs = 30761
A
w9120
153813 >= 25*xabs
25*xabs = 153813
B
w9121
153817 >= 25*xabs
25*xabs = 153817
A
w9122
6153 >= xabs
xabs = 6153
B
w9123
153829 >= 25*xabs
25*xabs = 153829
A
w9124
153837 >= 25*xabs
25*xabs = 153837
B
w9125
153841 >= 25*xabs
25*xabs = 153841
A
w9126
153849 >= 25*xabs
25*xabs = 153849
B

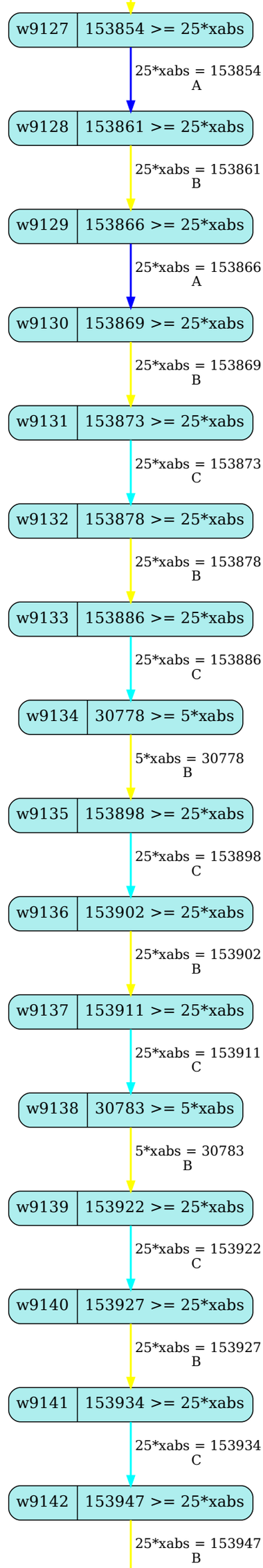
w9127
153854 >= 25*xabs
25*xabs = 153854
A
w9128
153861 >= 25*xabs
25*xabs = 153861
B
w9129
153866 >= 25*xabs
25*xabs = 153866
A
w9130
153869 >= 25*xabs
25*xabs = 153869
B
w9131
153873 >= 25*xabs
25*xabs = 153873
C
w9132
153878 >= 25*xabs
25*xabs = 153878
B
w9133
153886 >= 25*xabs
25*xabs = 153886
C
w9134
30778 >= 5*xabs
5*xabs = 30778
B
w9135
153898 >= 25*xabs
25*xabs = 153898
C
w9136
153902 >= 25*xabs
25*xabs = 153902
B
w9137
153911 >= 25*xabs
25*xabs = 153911
C
w9138
30783 >= 5*xabs
5*xabs = 30783
B
w9139
153922 >= 25*xabs
25*xabs = 153922
C
w9140
153927 >= 25*xabs
25*xabs = 153927
B
w9141
153934 >= 25*xabs
25*xabs = 153934
C
w9142
153947 >= 25*xabs
25*xabs = 153947
B

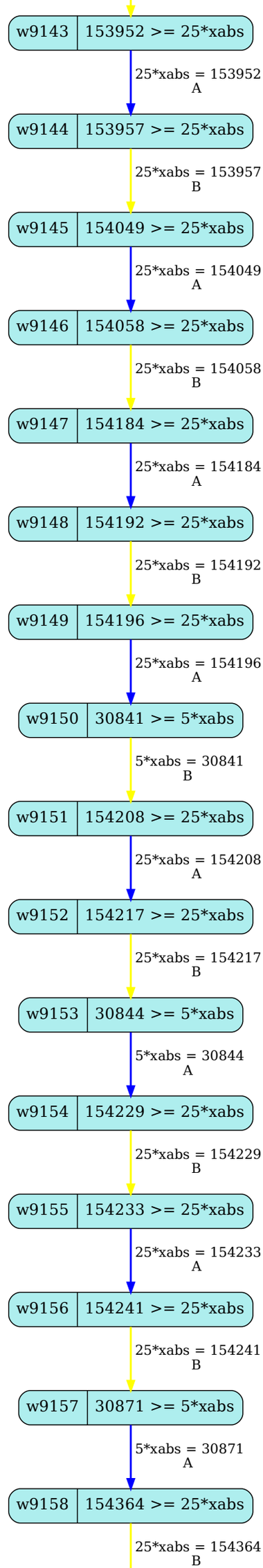
w9143
153952 >= 25*xabs
25*xabs = 153952
A
w9144
153957 >= 25*xabs
25*xabs = 153957
B
w9145
154049 >= 25*xabs
25*xabs = 154049
A
w9146
154058 >= 25*xabs
25*xabs = 154058
B
w9147
154184 >= 25*xabs
25*xabs = 154184
A
w9148
154192 >= 25*xabs
25*xabs = 154192
B
w9149
154196 >= 25*xabs
25*xabs = 154196
A
w9150
30841 >= 5*xabs
5*xabs = 30841
B
w9151
154208 >= 25*xabs
25*xabs = 154208
A
w9152
154217 >= 25*xabs
25*xabs = 154217
B
w9153
30844 >= 5*xabs
5*xabs = 30844
A
w9154
154229 >= 25*xabs
25*xabs = 154229
B
w9155
154233 >= 25*xabs
25*xabs = 154233
A
w9156
154241 >= 25*xabs
25*xabs = 154241
B
w9157
30871 >= 5*xabs
5*xabs = 30871
A
w9158
154364 >= 25*xabs
25*xabs = 154364
B

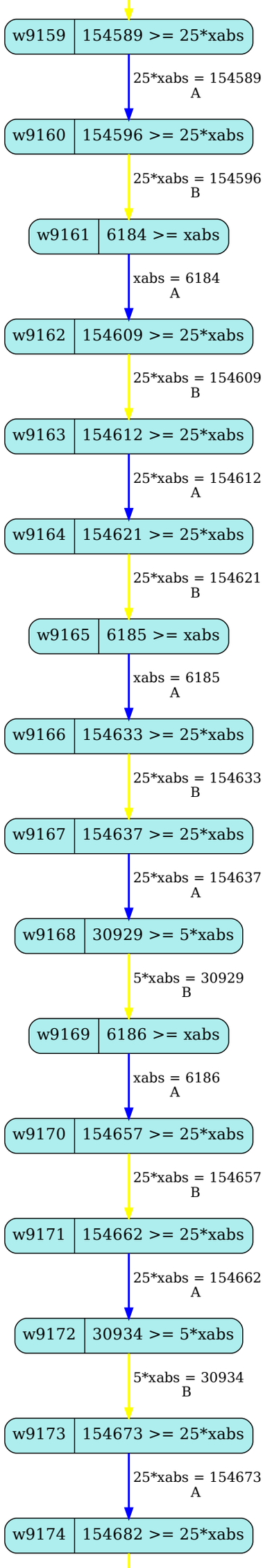
w9159
154589 >= 25*xabs
25*xabs = 154589
A
w9160
154596 >= 25*xabs
25*xabs = 154596
B
w9161
6184 >= xabs
xabs = 6184
A
w9162
154609 >= 25*xabs
25*xabs = 154609
B
w9163
154612 >= 25*xabs
25*xabs = 154612
A
w9164
154621 >= 25*xabs
25*xabs = 154621
B
w9165
6185 >= xabs
xabs = 6185
A
w9166
154633 >= 25*xabs
25*xabs = 154633
B
w9167
154637 >= 25*xabs
25*xabs = 154637
A
w9168
30929 >= 5*xabs
5*xabs = 30929
B
w9169
6186 >= xabs
xabs = 6186
A
w9170
154657 >= 25*xabs
25*xabs = 154657
B
w9171
154662 >= 25*xabs
25*xabs = 154662
A
w9172
30934 >= 5*xabs
5*xabs = 30934
B
w9173
154673 >= 25*xabs
25*xabs = 154673
A
w9174
154682 >= 25*xabs

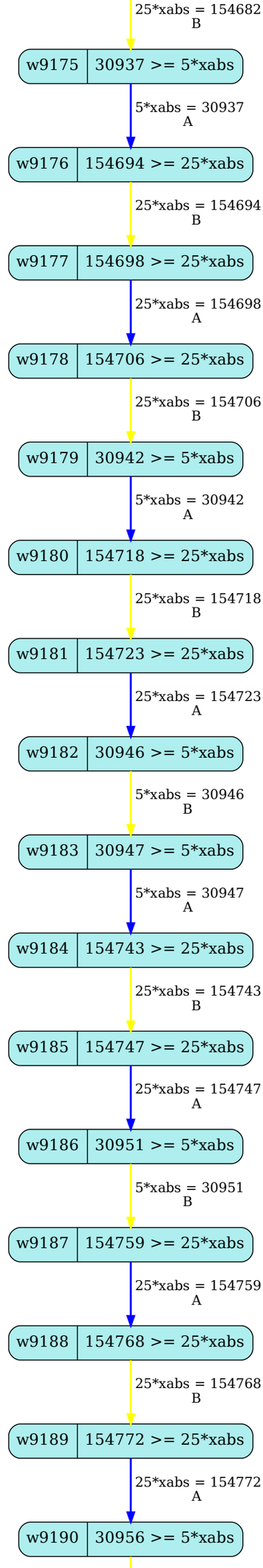
25*xabs = 154682
B
w9175
30937 >= 5*xabs
5*xabs = 30937
A
w9176
154694 >= 25*xabs
25*xabs = 154694
B
w9177
154698 >= 25*xabs
25*xabs = 154698
A
w9178
154706 >= 25*xabs
25*xabs = 154706
B
w9179
30942 >= 5*xabs
5*xabs = 30942
A
w9180
154718 >= 25*xabs
25*xabs = 154718
B
w9181
154723 >= 25*xabs
25*xabs = 154723
A
w9182
30946 >= 5*xabs
5*xabs = 30946
B
w9183
30947 >= 5*xabs
5*xabs = 30947
A
w9184
154743 >= 25*xabs
25*xabs = 154743
B
w9185
154747 >= 25*xabs
25*xabs = 154747
A
w9186
30951 >= 5*xabs
5*xabs = 30951
B
w9187
154759 >= 25*xabs
25*xabs = 154759
A
w9188
154768 >= 25*xabs
25*xabs = 154768
B
w9189
154772 >= 25*xabs
25*xabs = 154772
A
w9190
30956 >= 5*xabs

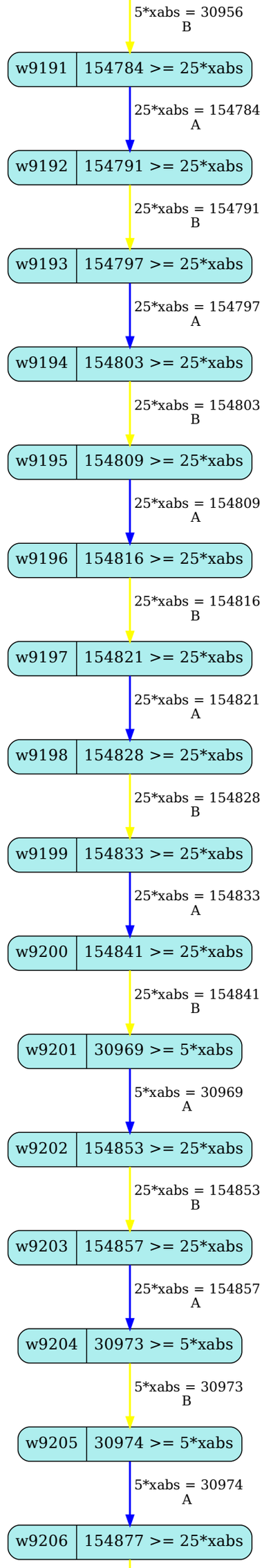
5*xabs = 30956
B
w9191
154784 >= 25*xabs
25*xabs = 154784
A
w9192
154791 >= 25*xabs
25*xabs = 154791
B
w9193
154797 >= 25*xabs
25*xabs = 154797
A
w9194
154803 >= 25*xabs
25*xabs = 154803
B
w9195
154809 >= 25*xabs
25*xabs = 154809
A
w9196
154816 >= 25*xabs
25*xabs = 154816
B
w9197
154821 >= 25*xabs
25*xabs = 154821
A
w9198
154828 >= 25*xabs
25*xabs = 154828
B
w9199
154833 >= 25*xabs
25*xabs = 154833
A
w9200
154841 >= 25*xabs
25*xabs = 154841
B
w9201
30969 >= 5*xabs
5*xabs = 30969
A
w9202
154853 >= 25*xabs
25*xabs = 154853
B
w9203
154857 >= 25*xabs
25*xabs = 154857
A
w9204
30973 >= 5*xabs
5*xabs = 30973
B
w9205
30974 >= 5*xabs
5*xabs = 30974
A
w9206
154877 >= 25*xabs

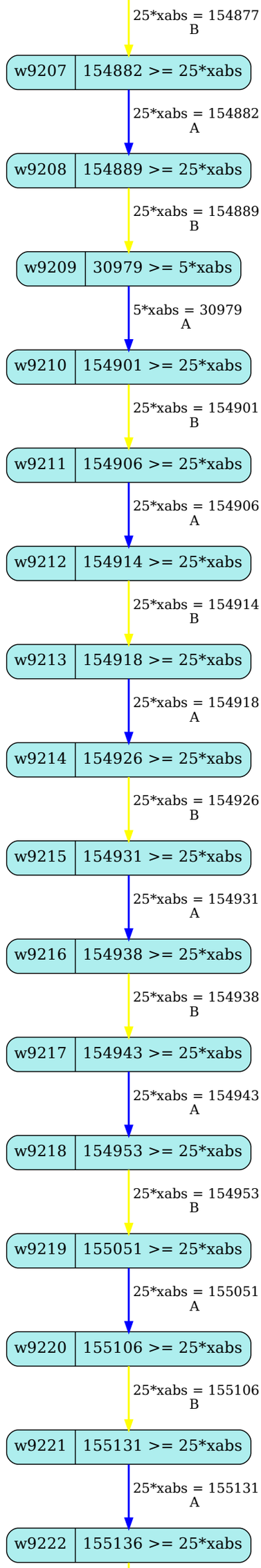
25*xabs = 154877
B
w9207
154882 >= 25*xabs
25*xabs = 154882
A
w9208
154889 >= 25*xabs
25*xabs = 154889
B
w9209
30979 >= 5*xabs
5*xabs = 30979
A
w9210
154901 >= 25*xabs
25*xabs = 154901
B
w9211
154906 >= 25*xabs
25*xabs = 154906
A
w9212
154914 >= 25*xabs
25*xabs = 154914
B
w9213
154918 >= 25*xabs
25*xabs = 154918
A
w9214
154926 >= 25*xabs
25*xabs = 154926
B
w9215
154931 >= 25*xabs
25*xabs = 154931
A
w9216
154938 >= 25*xabs
25*xabs = 154938
B
w9217
154943 >= 25*xabs
25*xabs = 154943
A
w9218
154953 >= 25*xabs
25*xabs = 154953
B
w9219
155051 >= 25*xabs
25*xabs = 155051
A
w9220
155106 >= 25*xabs
25*xabs = 155106
B
w9221
155131 >= 25*xabs
25*xabs = 155131
A
w9222
155136 >= 25*xabs

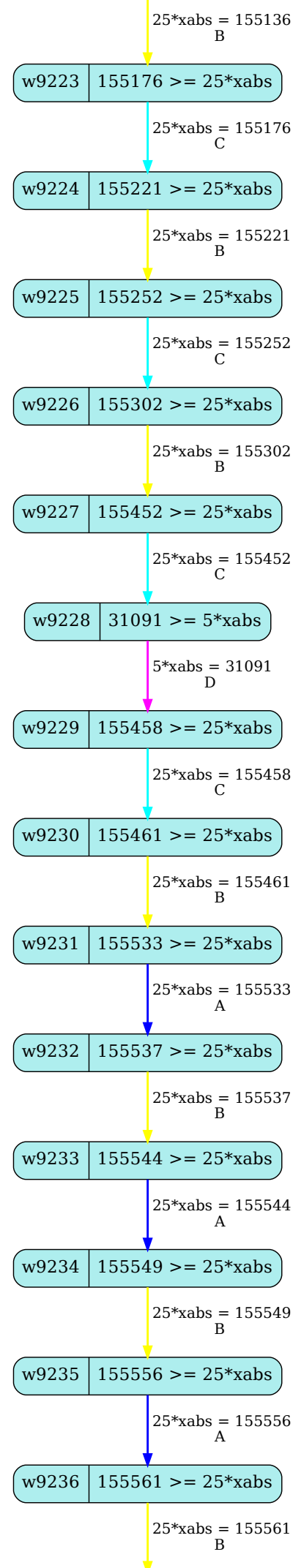
25*xabs = 155136
B
w9223
155176 >= 25*xabs
25*xabs = 155176
C
w9224
155221 >= 25*xabs
25*xabs = 155221
B
w9225
155252 >= 25*xabs
25*xabs = 155252
C
w9226
155302 >= 25*xabs
25*xabs = 155302
B
w9227
155452 >= 25*xabs
25*xabs = 155452
C
w9228
31091 >= 5*xabs
5*xabs = 31091
D
w9229
155458 >= 25*xabs
25*xabs = 155458
C
w9230
155461 >= 25*xabs
25*xabs = 155461
B
w9231
155533 >= 25*xabs
25*xabs = 155533
A
w9232
155537 >= 25*xabs
25*xabs = 155537
B
w9233
155544 >= 25*xabs
25*xabs = 155544
A
w9234
155549 >= 25*xabs
25*xabs = 155549
B
w9235
155556 >= 25*xabs
25*xabs = 155556
A
w9236
155561 >= 25*xabs
25*xabs = 155561
B

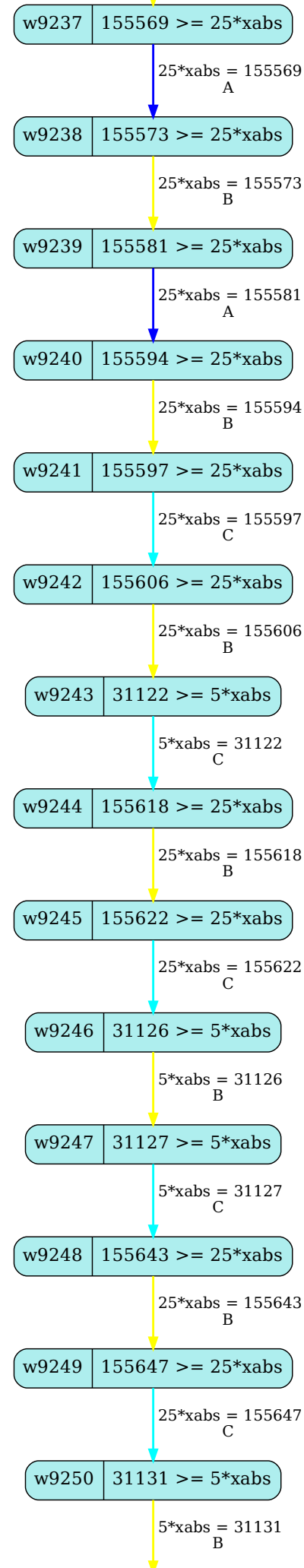
w9237
155569 >= 25*xabs
25*xabs = 155569
A
w9238
155573 >= 25*xabs
25*xabs = 155573
B
w9239
155581 >= 25*xabs
25*xabs = 155581
A
w9240
155594 >= 25*xabs
25*xabs = 155594
B
w9241
155597 >= 25*xabs
25*xabs = 155597
C
w9242
155606 >= 25*xabs
25*xabs = 155606
B
w9243
31122 >= 5*xabs
5*xabs = 31122
C
w9244
155618 >= 25*xabs
25*xabs = 155618
B
w9245
155622 >= 25*xabs
25*xabs = 155622
C
w9246
31126 >= 5*xabs
5*xabs = 31126
B
w9247
31127 >= 5*xabs
5*xabs = 31127
C
w9248
155643 >= 25*xabs
25*xabs = 155643
B
w9249
155647 >= 25*xabs
25*xabs = 155647
C
w9250
31131 >= 5*xabs
5*xabs = 31131
B

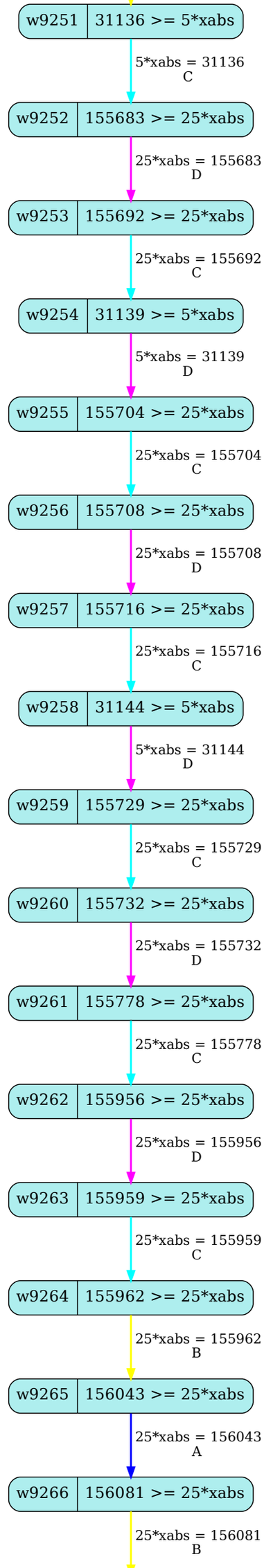
w9251
31136 >= 5*xabs
5*xabs = 31136
C
w9252
155683 >= 25*xabs
25*xabs = 155683
D
w9253
155692 >= 25*xabs
25*xabs = 155692
C
w9254
31139 >= 5*xabs
5*xabs = 31139
D
w9255
155704 >= 25*xabs
25*xabs = 155704
C
w9256
155708 >= 25*xabs
25*xabs = 155708
D
w9257
155716 >= 25*xabs
25*xabs = 155716
C
w9258
31144 >= 5*xabs
5*xabs = 31144
D
w9259
155729 >= 25*xabs
25*xabs = 155729
C
w9260
155732 >= 25*xabs
25*xabs = 155732
D
w9261
155778 >= 25*xabs
25*xabs = 155778
C
w9262
155956 >= 25*xabs
25*xabs = 155956
D
w9263
155959 >= 25*xabs
25*xabs = 155959
C
w9264
155962 >= 25*xabs
25*xabs = 155962
B
w9265
156043 >= 25*xabs
25*xabs = 156043
A
w9266
156081 >= 25*xabs
25*xabs = 156081
B

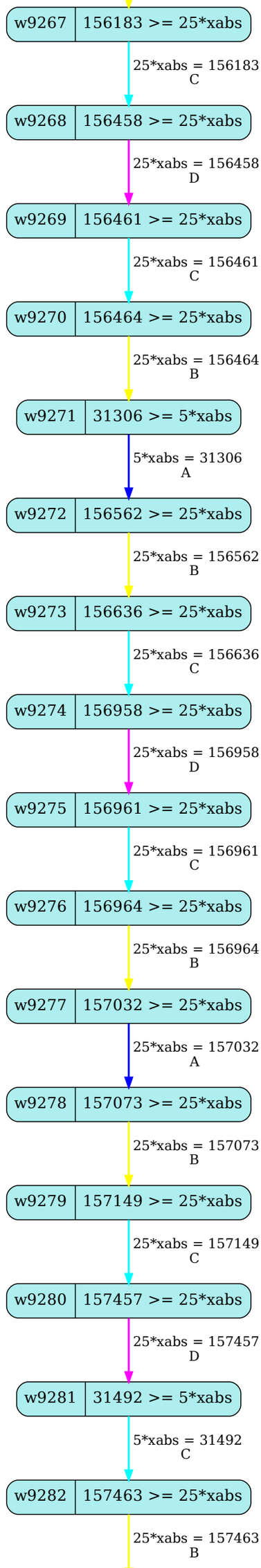
w9267
156183 >= 25*xabs
25*xabs = 156183
C
w9268
156458 >= 25*xabs
25*xabs = 156458
D
w9269
156461 >= 25*xabs
25*xabs = 156461
C
w9270
156464 >= 25*xabs
25*xabs = 156464
B
w9271
31306 >= 5*xabs
5*xabs = 31306
A
w9272
156562 >= 25*xabs
25*xabs = 156562
B
w9273
156636 >= 25*xabs
25*xabs = 156636
C
w9274
156958 >= 25*xabs
25*xabs = 156958
D
w9275
156961 >= 25*xabs
25*xabs = 156961
C
w9276
156964 >= 25*xabs
25*xabs = 156964
B
w9277
157032 >= 25*xabs
25*xabs = 157032
A
w9278
157073 >= 25*xabs
25*xabs = 157073
B
w9279
157149 >= 25*xabs
25*xabs = 157149
C
w9280
157457 >= 25*xabs
25*xabs = 157457
D
w9281
31492 >= 5*xabs
5*xabs = 31492
C
w9282
157463 >= 25*xabs
25*xabs = 157463
B

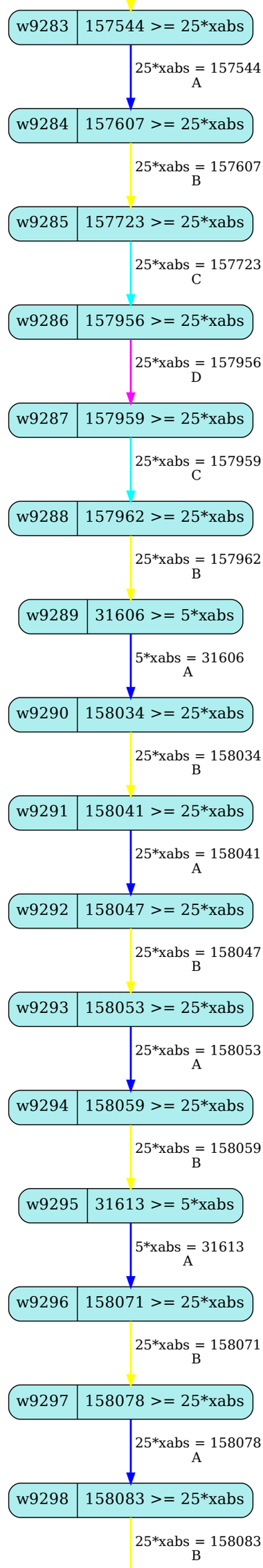
w9283
157544 >= 25*xabs
25*xabs = 157544
A
w9284
157607 >= 25*xabs
25*xabs = 157607
B
w9285
157723 >= 25*xabs
25*xabs = 157723
C
w9286
157956 >= 25*xabs
25*xabs = 157956
D
w9287
157959 >= 25*xabs
25*xabs = 157959
C
w9288
157962 >= 25*xabs
25*xabs = 157962
B
w9289
31606 >= 5*xabs
5*xabs = 31606
A
w9290
158034 >= 25*xabs
25*xabs = 158034
B
w9291
158041 >= 25*xabs
25*xabs = 158041
A
w9292
158047 >= 25*xabs
25*xabs = 158047
B
w9293
158053 >= 25*xabs
25*xabs = 158053
A
w9294
158059 >= 25*xabs
25*xabs = 158059
B
w9295
31613 >= 5*xabs
5*xabs = 31613
A
w9296
158071 >= 25*xabs
25*xabs = 158071
B
w9297
158078 >= 25*xabs
25*xabs = 158078
A
w9298
158083 >= 25*xabs
25*xabs = 158083
B

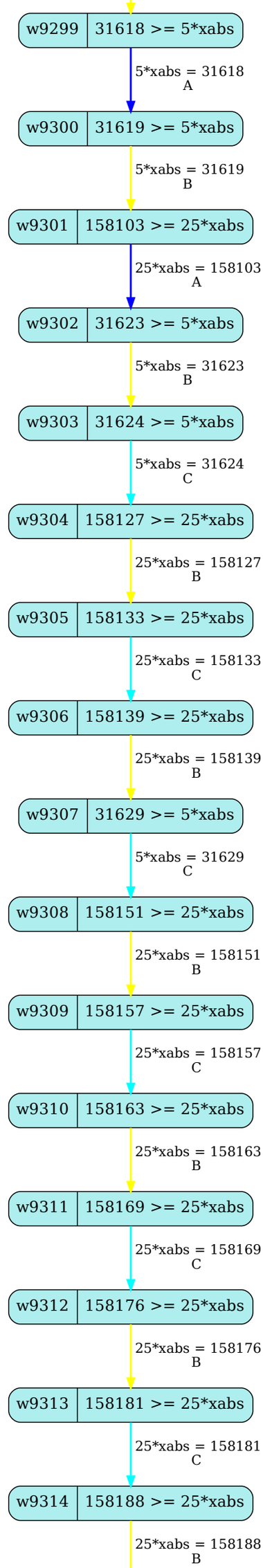
w9299
31618 >= 5*xabs
5*xabs = 31618
A
w9300
31619 >= 5*xabs
5*xabs = 31619
B
w9301
158103 >= 25*xabs
25*xabs = 158103
A
w9302
31623 >= 5*xabs
5*xabs = 31623
B
w9303
31624 >= 5*xabs
5*xabs = 31624
C
w9304
158127 >= 25*xabs
25*xabs = 158127
B
w9305
158133 >= 25*xabs
25*xabs = 158133
C
w9306
158139 >= 25*xabs
25*xabs = 158139
B
w9307
31629 >= 5*xabs
5*xabs = 31629
C
w9308
158151 >= 25*xabs
25*xabs = 158151
B
w9309
158157 >= 25*xabs
25*xabs = 158157
C
w9310
158163 >= 25*xabs
25*xabs = 158163
B
w9311
158169 >= 25*xabs
25*xabs = 158169
C
w9312
158176 >= 25*xabs
25*xabs = 158176
B
w9313
158181 >= 25*xabs
25*xabs = 158181
C
w9314
158188 >= 25*xabs
25*xabs = 158188
B

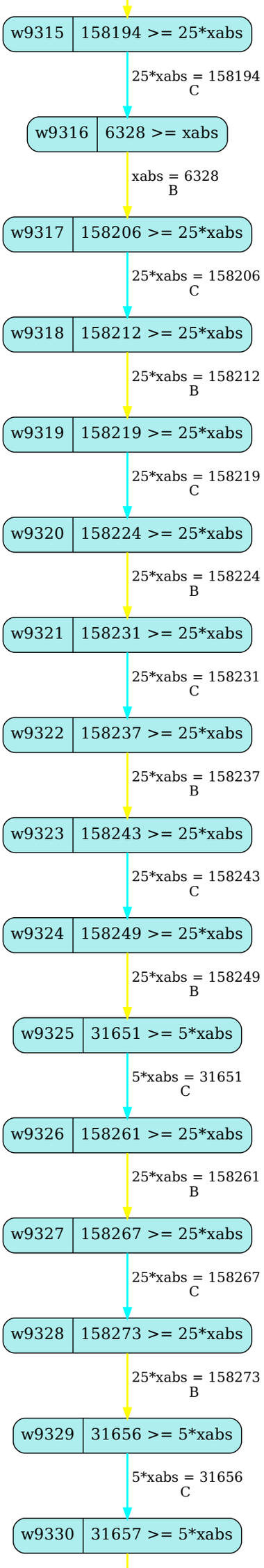
w9315
158194 >= 25*xabs
25*xabs = 158194
C
w9316
6328 >= xabs
xabs = 6328
B
w9317
158206 >= 25*xabs
25*xabs = 158206
C
w9318
158212 >= 25*xabs
25*xabs = 158212
B
w9319
158219 >= 25*xabs
25*xabs = 158219
C
w9320
158224 >= 25*xabs
25*xabs = 158224
B
w9321
158231 >= 25*xabs
25*xabs = 158231
C
w9322
158237 >= 25*xabs
25*xabs = 158237
B
w9323
158243 >= 25*xabs
25*xabs = 158243
C
w9324
158249 >= 25*xabs
25*xabs = 158249
B
w9325
31651 >= 5*xabs
5*xabs = 31651
C
w9326
158261 >= 25*xabs
25*xabs = 158261
B
w9327
158267 >= 25*xabs
25*xabs = 158267
C
w9328
158273 >= 25*xabs
25*xabs = 158273
B
w9329
31656 >= 5*xabs
5*xabs = 31656
C
w9330
31657 >= 5*xabs

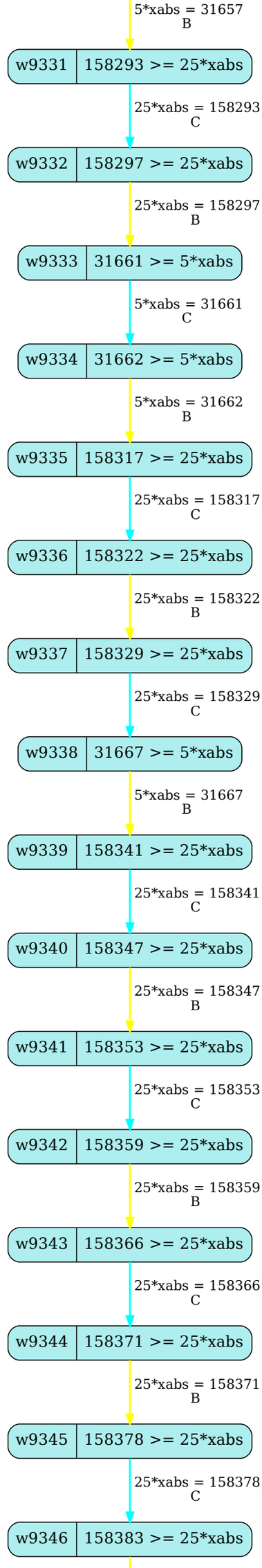
5*xabs = 31657
B
w9331
158293 >= 25*xabs
25*xabs = 158293
C
w9332
158297 >= 25*xabs
25*xabs = 158297
B
w9333
31661 >= 5*xabs
5*xabs = 31661
C
w9334
31662 >= 5*xabs
5*xabs = 31662
B
w9335
158317 >= 25*xabs
25*xabs = 158317
C
w9336
158322 >= 25*xabs
25*xabs = 158322
B
w9337
158329 >= 25*xabs
25*xabs = 158329
C
w9338
31667 >= 5*xabs
5*xabs = 31667
B
w9339
158341 >= 25*xabs
25*xabs = 158341
C
w9340
158347 >= 25*xabs
25*xabs = 158347
B
w9341
158353 >= 25*xabs
25*xabs = 158353
C
w9342
158359 >= 25*xabs
25*xabs = 158359
B
w9343
158366 >= 25*xabs
25*xabs = 158366
C
w9344
158371 >= 25*xabs
25*xabs = 158371
B
w9345
158378 >= 25*xabs
25*xabs = 158378
C
w9346
158383 >= 25*xabs

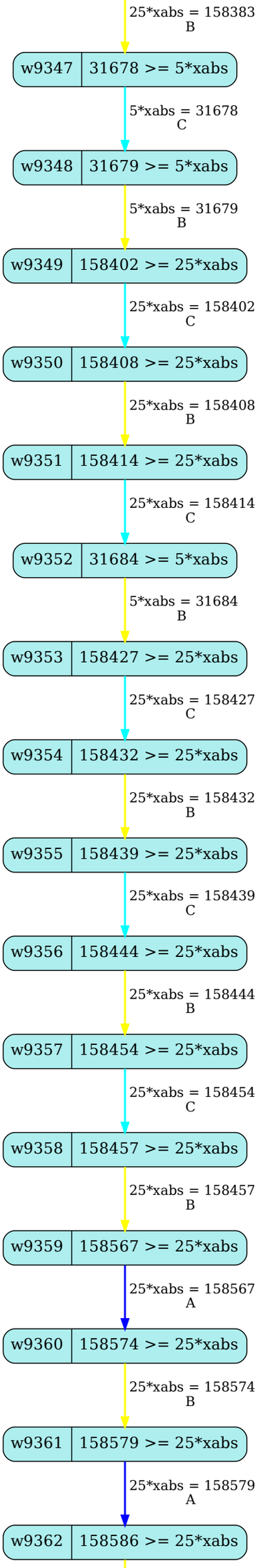
25*xabs = 158383
B
w9347
31678 >= 5*xabs
5*xabs = 31678
C
w9348
31679 >= 5*xabs
5*xabs = 31679
B
w9349
158402 >= 25*xabs
25*xabs = 158402
C
w9350
158408 >= 25*xabs
25*xabs = 158408
B
w9351
158414 >= 25*xabs
25*xabs = 158414
C
w9352
31684 >= 5*xabs
5*xabs = 31684
B
w9353
158427 >= 25*xabs
25*xabs = 158427
C
w9354
158432 >= 25*xabs
25*xabs = 158432
B
w9355
158439 >= 25*xabs
25*xabs = 158439
C
w9356
158444 >= 25*xabs
25*xabs = 158444
B
w9357
158454 >= 25*xabs
25*xabs = 158454
C
w9358
158457 >= 25*xabs
25*xabs = 158457
B
w9359
158567 >= 25*xabs
25*xabs = 158567
A
w9360
158574 >= 25*xabs
25*xabs = 158574
B
w9361
158579 >= 25*xabs
25*xabs = 158579
A
w9362
158586 >= 25*xabs

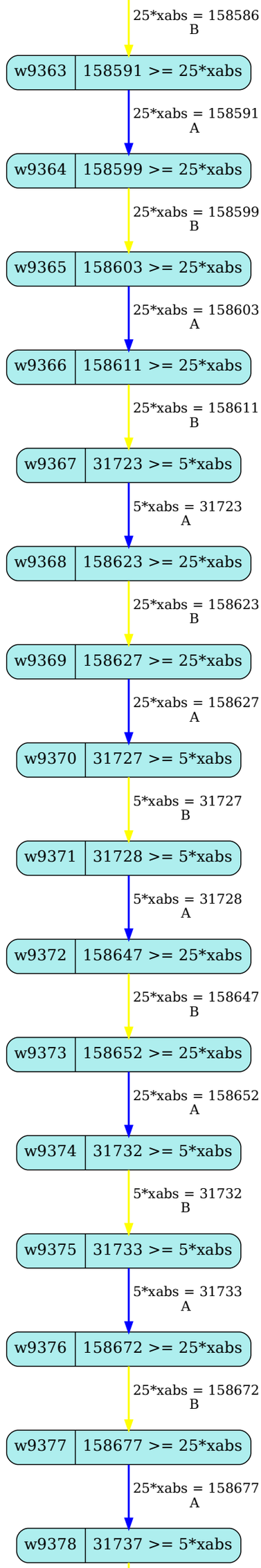
25*xabs = 158586
B
w9363
158591 >= 25*xabs
25*xabs = 158591
A
w9364
158599 >= 25*xabs
25*xabs = 158599
B
w9365
158603 >= 25*xabs
25*xabs = 158603
A
w9366
158611 >= 25*xabs
25*xabs = 158611
B
w9367
31723 >= 5*xabs
5*xabs = 31723
A
w9368
158623 >= 25*xabs
25*xabs = 158623
B
w9369
158627 >= 25*xabs
25*xabs = 158627
A
w9370
31727 >= 5*xabs
5*xabs = 31727
B
w9371
31728 >= 5*xabs
5*xabs = 31728
A
w9372
158647 >= 25*xabs
25*xabs = 158647
B
w9373
158652 >= 25*xabs
25*xabs = 158652
A
w9374
31732 >= 5*xabs
5*xabs = 31732
B
w9375
31733 >= 5*xabs
5*xabs = 31733
A
w9376
158672 >= 25*xabs
25*xabs = 158672
B
w9377
158677 >= 25*xabs
25*xabs = 158677
A
w9378
31737 >= 5*xabs

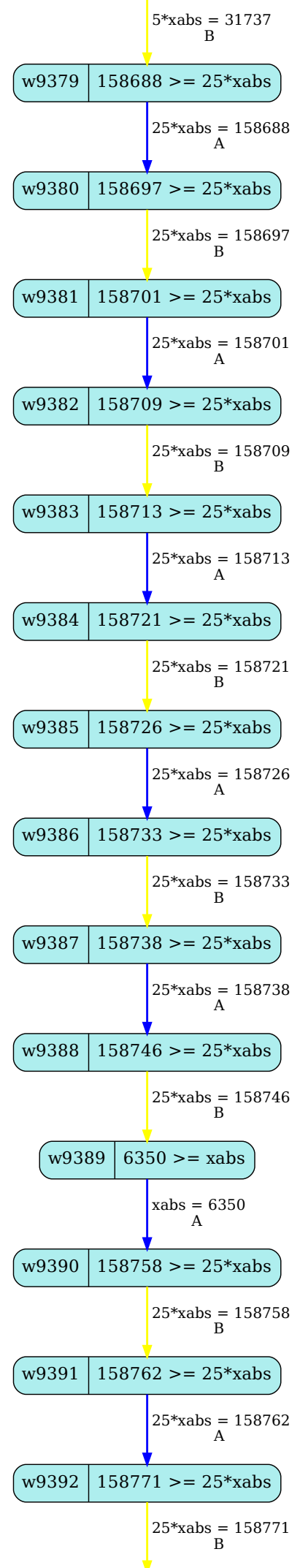
5*xabs = 31737
B
w9379
158688 >= 25*xabs
25*xabs = 158688
A
w9380
158697 >= 25*xabs
25*xabs = 158697
B
w9381
158701 >= 25*xabs
25*xabs = 158701
A
w9382
158709 >= 25*xabs
25*xabs = 158709
B
w9383
158713 >= 25*xabs
25*xabs = 158713
A
w9384
158721 >= 25*xabs
25*xabs = 158721
B
w9385
158726 >= 25*xabs
25*xabs = 158726
A
w9386
158733 >= 25*xabs
25*xabs = 158733
B
w9387
158738 >= 25*xabs
25*xabs = 158738
A
w9388
158746 >= 25*xabs
25*xabs = 158746
B
w9389
6350 >= xabs
xabs = 6350
A
w9390
158758 >= 25*xabs
25*xabs = 158758
B
w9391
158762 >= 25*xabs
25*xabs = 158762
A
w9392
158771 >= 25*xabs
25*xabs = 158771
B

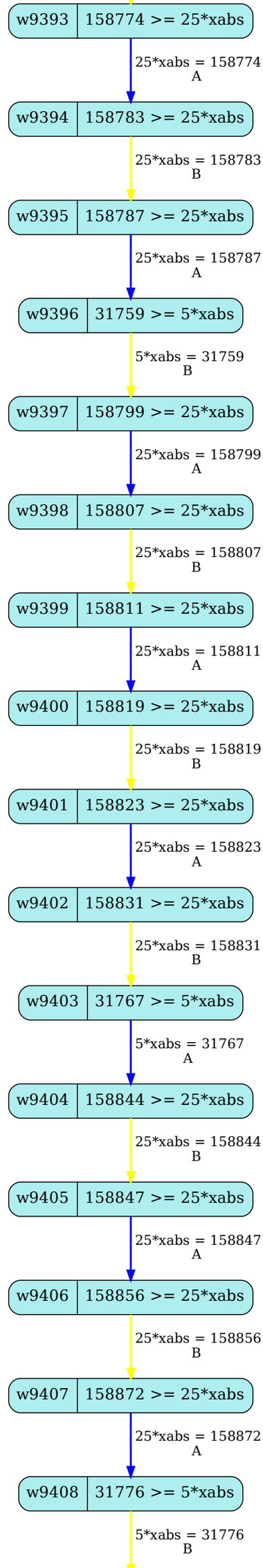
w9393
158774 >= 25*xabs
25*xabs = 158774
A
w9394
158783 >= 25*xabs
25*xabs = 158783
B
w9395
158787 >= 25*xabs
25*xabs = 158787
A
w9396
31759 >= 5*xabs
5*xabs = 31759
B
w9397
158799 >= 25*xabs
25*xabs = 158799
A
w9398
158807 >= 25*xabs
25*xabs = 158807
B
w9399
158811 >= 25*xabs
25*xabs = 158811
A
w9400
158819 >= 25*xabs
25*xabs = 158819
B
w9401
158823 >= 25*xabs
25*xabs = 158823
A
w9402
158831 >= 25*xabs
25*xabs = 158831
B
w9403
31767 >= 5*xabs
5*xabs = 31767
A
w9404
158844 >= 25*xabs
25*xabs = 158844
B
w9405
158847 >= 25*xabs
25*xabs = 158847
A
w9406
158856 >= 25*xabs
25*xabs = 158856
B
w9407
158872 >= 25*xabs
25*xabs = 158872
A
w9408
31776 >= 5*xabs
5*xabs = 31776
B

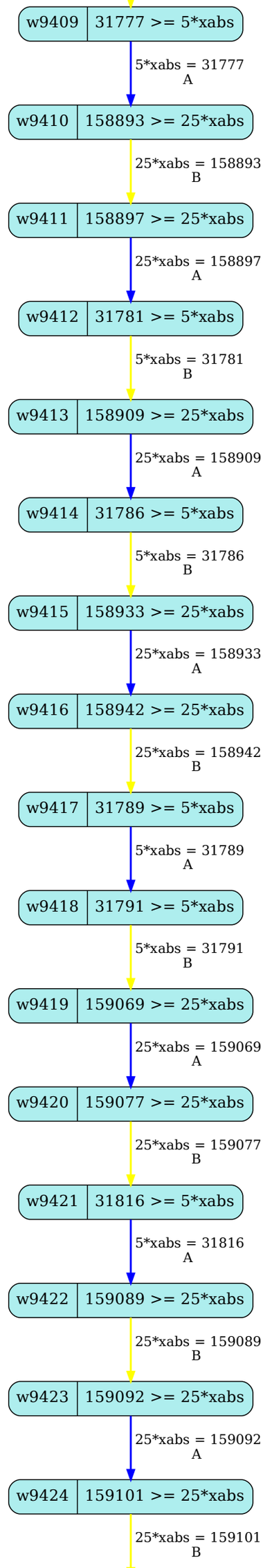
w9409
31777 >= 5*xabs
5*xabs = 31777
A
w9410
158893 >= 25*xabs
25*xabs = 158893
B
w9411
158897 >= 25*xabs
25*xabs = 158897
A
w9412
31781 >= 5*xabs
5*xabs = 31781
B
w9413
158909 >= 25*xabs
25*xabs = 158909
A
w9414
31786 >= 5*xabs
5*xabs = 31786
B
w9415
158933 >= 25*xabs
25*xabs = 158933
A
w9416
158942 >= 25*xabs
25*xabs = 158942
B
w9417
31789 >= 5*xabs
5*xabs = 31789
A
w9418
31791 >= 5*xabs
5*xabs = 31791
B
w9419
159069 >= 25*xabs
25*xabs = 159069
A
w9420
159077 >= 25*xabs
25*xabs = 159077
B
w9421
31816 >= 5*xabs
5*xabs = 31816
A
w9422
159089 >= 25*xabs
25*xabs = 159089
B
w9423
159092 >= 25*xabs
25*xabs = 159092
A
w9424
159101 >= 25*xabs
25*xabs = 159101
B

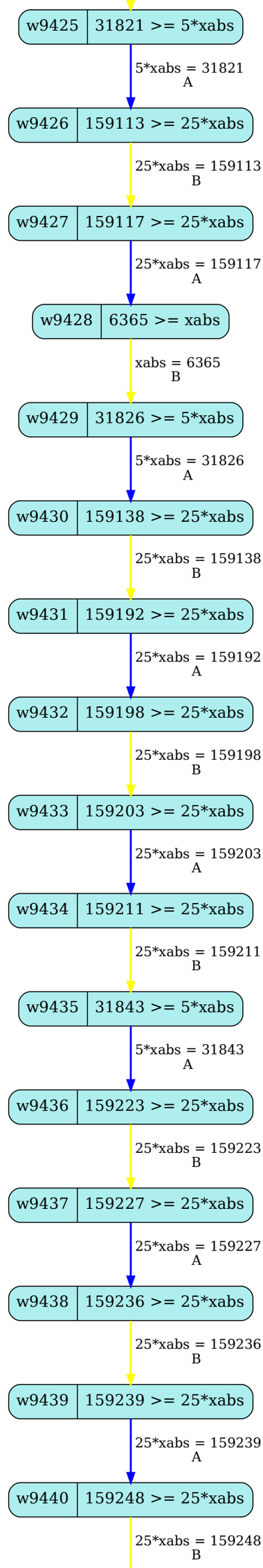
w9425
31821 >= 5*xabs
5*xabs = 31821
A
w9426
159113 >= 25*xabs
25*xabs = 159113
B
w9427
159117 >= 25*xabs
25*xabs = 159117
A
w9428
6365 >= xabs
xabs = 6365
B
w9429
31826 >= 5*xabs
5*xabs = 31826
A
w9430
159138 >= 25*xabs
25*xabs = 159138
B
w9431
159192 >= 25*xabs
25*xabs = 159192
A
w9432
159198 >= 25*xabs
25*xabs = 159198
B
w9433
159203 >= 25*xabs
25*xabs = 159203
A
w9434
159211 >= 25*xabs
25*xabs = 159211
B
w9435
31843 >= 5*xabs
5*xabs = 31843
A
w9436
159223 >= 25*xabs
25*xabs = 159223
B
w9437
159227 >= 25*xabs
25*xabs = 159227
A
w9438
159236 >= 25*xabs
25*xabs = 159236
B
w9439
159239 >= 25*xabs
25*xabs = 159239
A
w9440
159248 >= 25*xabs
25*xabs = 159248
B

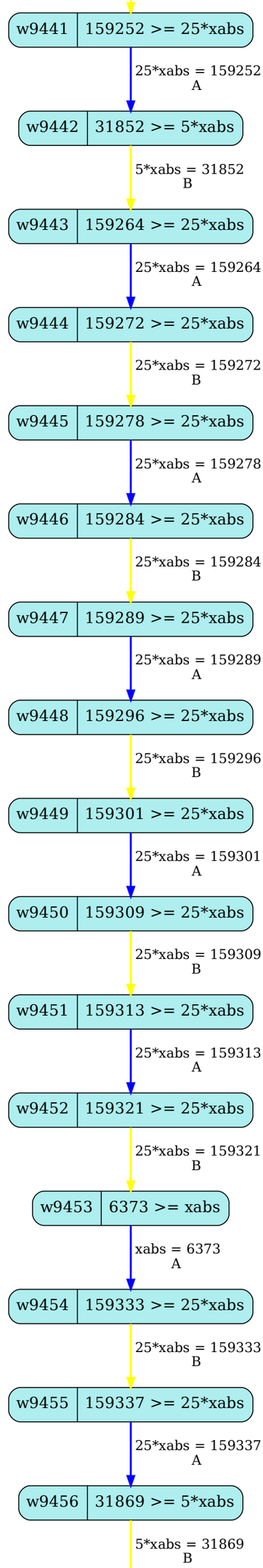
w9441
159252 >= 25*xabs
25*xabs = 159252
A
w9442
31852 >= 5*xabs
5*xabs = 31852
B
w9443
159264 >= 25*xabs
25*xabs = 159264
A
w9444
159272 >= 25*xabs
25*xabs = 159272
B
w9445
159278 >= 25*xabs
25*xabs = 159278
A
w9446
159284 >= 25*xabs
25*xabs = 159284
B
w9447
159289 >= 25*xabs
25*xabs = 159289
A
w9448
159296 >= 25*xabs
25*xabs = 159296
B
w9449
159301 >= 25*xabs
25*xabs = 159301
A
w9450
159309 >= 25*xabs
25*xabs = 159309
B
w9451
159313 >= 25*xabs
25*xabs = 159313
A
w9452
159321 >= 25*xabs
25*xabs = 159321
B
w9453
6373 >= xabs
xabs = 6373
A
w9454
159333 >= 25*xabs
25*xabs = 159333
B
w9455
159337 >= 25*xabs
25*xabs = 159337
A
w9456
31869 >= 5*xabs
5*xabs = 31869
B

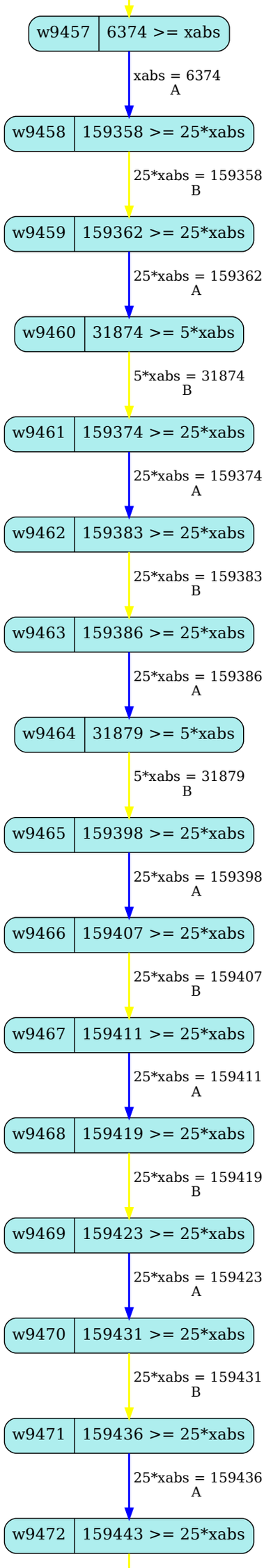
w9457
6374 >= xabs
xabs = 6374
A
w9458
159358 >= 25*xabs
25*xabs = 159358
B
w9459
159362 >= 25*xabs
25*xabs = 159362
A
w9460
31874 >= 5*xabs
5*xabs = 31874
B
w9461
159374 >= 25*xabs
25*xabs = 159374
A
w9462
159383 >= 25*xabs
25*xabs = 159383
B
w9463
159386 >= 25*xabs
25*xabs = 159386
A
w9464
31879 >= 5*xabs
5*xabs = 31879
B
w9465
159398 >= 25*xabs
25*xabs = 159398
A
w9466
159407 >= 25*xabs
25*xabs = 159407
B
w9467
159411 >= 25*xabs
25*xabs = 159411
A
w9468
159419 >= 25*xabs
25*xabs = 159419
B
w9469
159423 >= 25*xabs
25*xabs = 159423
A
w9470
159431 >= 25*xabs
25*xabs = 159431
B
w9471
159436 >= 25*xabs
25*xabs = 159436
A
w9472
159443 >= 25*xabs

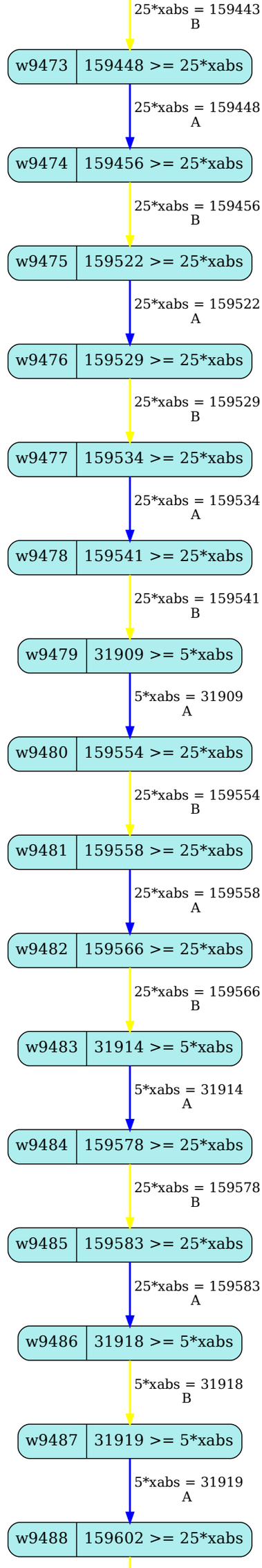
25*xabs = 159443
B
w9473
159448 >= 25*xabs
25*xabs = 159448
A
w9474
159456 >= 25*xabs
25*xabs = 159456
B
w9475
159522 >= 25*xabs
25*xabs = 159522
A
w9476
159529 >= 25*xabs
25*xabs = 159529
B
w9477
159534 >= 25*xabs
25*xabs = 159534
A
w9478
159541 >= 25*xabs
25*xabs = 159541
B
w9479
31909 >= 5*xabs
5*xabs = 31909
A
w9480
159554 >= 25*xabs
25*xabs = 159554
B
w9481
159558 >= 25*xabs
25*xabs = 159558
A
w9482
159566 >= 25*xabs
25*xabs = 159566
B
w9483
31914 >= 5*xabs
5*xabs = 31914
A
w9484
159578 >= 25*xabs
25*xabs = 159578
B
w9485
159583 >= 25*xabs
25*xabs = 159583
A
w9486
31918 >= 5*xabs
5*xabs = 31918
B
w9487
31919 >= 5*xabs
5*xabs = 31919
A
w9488
159602 >= 25*xabs

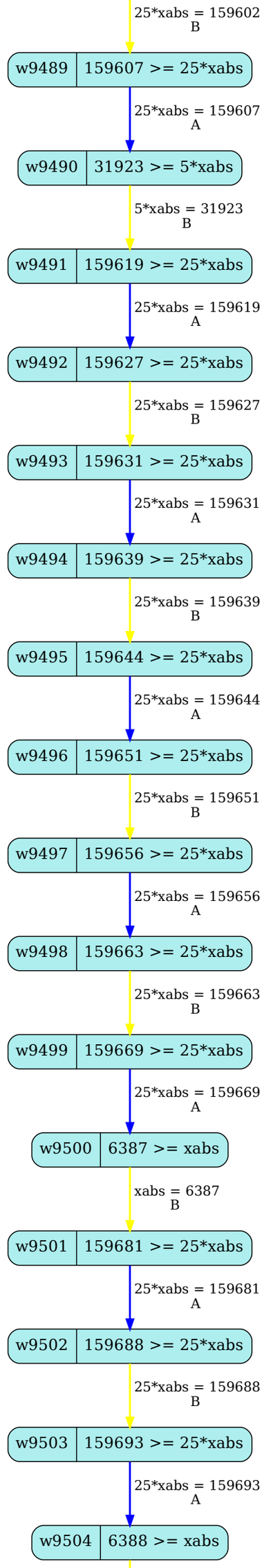
25*xabs = 159602
B
w9489
159607 >= 25*xabs
25*xabs = 159607
A
w9490
31923 >= 5*xabs
5*xabs = 31923
B
w9491
159619 >= 25*xabs
25*xabs = 159619
A
w9492
159627 >= 25*xabs
25*xabs = 159627
B
w9493
159631 >= 25*xabs
25*xabs = 159631
A
w9494
159639 >= 25*xabs
25*xabs = 159639
B
w9495
159644 >= 25*xabs
25*xabs = 159644
A
w9496
159651 >= 25*xabs
25*xabs = 159651
B
w9497
159656 >= 25*xabs
25*xabs = 159656
A
w9498
159663 >= 25*xabs
25*xabs = 159663
B
w9499
159669 >= 25*xabs
25*xabs = 159669
A
w9500
6387 >= xabs
xabs = 6387
B
w9501
159681 >= 25*xabs
25*xabs = 159681
A
w9502
159688 >= 25*xabs
25*xabs = 159688
B
w9503
159693 >= 25*xabs
25*xabs = 159693
A
w9504
6388 >= xabs

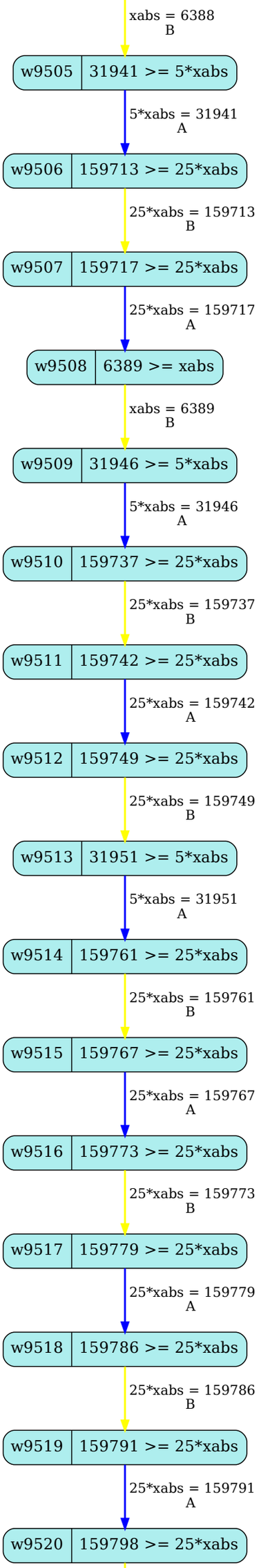
xabs = 6388
B
w9505
31941 >= 5*xabs
5*xabs = 31941
A
w9506
159713 >= 25*xabs
25*xabs = 159713
B
w9507
159717 >= 25*xabs
25*xabs = 159717
A
w9508
6389 >= xabs
xabs = 6389
B
w9509
31946 >= 5*xabs
5*xabs = 31946
A
w9510
159737 >= 25*xabs
25*xabs = 159737
B
w9511
159742 >= 25*xabs
25*xabs = 159742
A
w9512
159749 >= 25*xabs
25*xabs = 159749
B
w9513
31951 >= 5*xabs
5*xabs = 31951
A
w9514
159761 >= 25*xabs
25*xabs = 159761
B
w9515
159767 >= 25*xabs
25*xabs = 159767
A
w9516
159773 >= 25*xabs
25*xabs = 159773
B
w9517
159779 >= 25*xabs
25*xabs = 159779
A
w9518
159786 >= 25*xabs
25*xabs = 159786
B
w9519
159791 >= 25*xabs
25*xabs = 159791
A
w9520
159798 >= 25*xabs

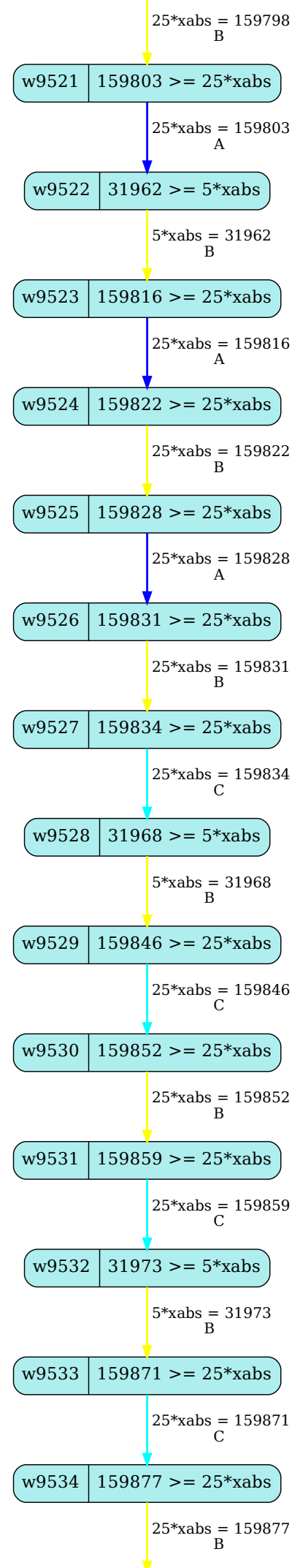
25*xabs = 159798
B
w9521
159803 >= 25*xabs
25*xabs = 159803
A
w9522
31962 >= 5*xabs
5*xabs = 31962
B
w9523
159816 >= 25*xabs
25*xabs = 159816
A
w9524
159822 >= 25*xabs
25*xabs = 159822
B
w9525
159828 >= 25*xabs
25*xabs = 159828
A
w9526
159831 >= 25*xabs
25*xabs = 159831
B
w9527
159834 >= 25*xabs
25*xabs = 159834
C
w9528
31968 >= 5*xabs
5*xabs = 31968
B
w9529
159846 >= 25*xabs
25*xabs = 159846
C
w9530
159852 >= 25*xabs
25*xabs = 159852
B
w9531
159859 >= 25*xabs
25*xabs = 159859
C
w9532
31973 >= 5*xabs
5*xabs = 31973
B
w9533
159871 >= 25*xabs
25*xabs = 159871
C
w9534
159877 >= 25*xabs
25*xabs = 159877
B

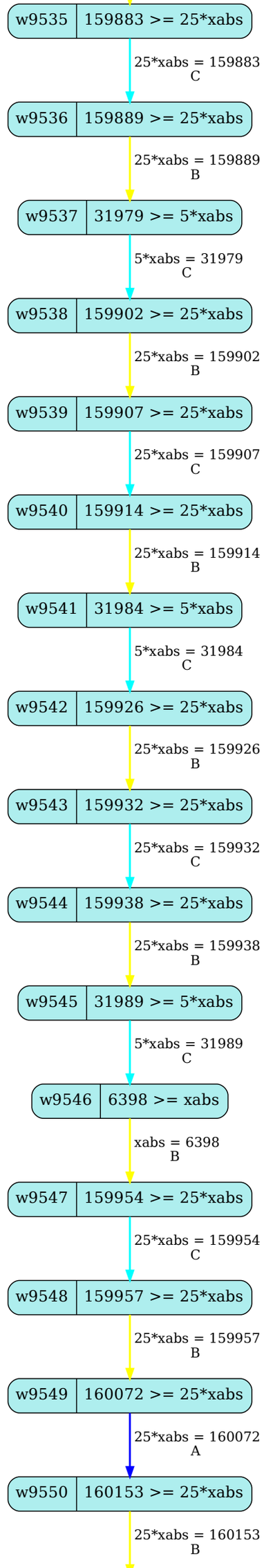
w9535
159883 >= 25*xabs
25*xabs = 159883
C
w9536
159889 >= 25*xabs
25*xabs = 159889
B
w9537
31979 >= 5*xabs
5*xabs = 31979
C
w9538
159902 >= 25*xabs
25*xabs = 159902
B
w9539
159907 >= 25*xabs
25*xabs = 159907
C
w9540
159914 >= 25*xabs
25*xabs = 159914
B
w9541
31984 >= 5*xabs
5*xabs = 31984
C
w9542
159926 >= 25*xabs
25*xabs = 159926
B
w9543
159932 >= 25*xabs
25*xabs = 159932
C
w9544
159938 >= 25*xabs
25*xabs = 159938
B
w9545
31989 >= 5*xabs
5*xabs = 31989
C
w9546
6398 >= xabs
xabs = 6398
B
w9547
159954 >= 25*xabs
25*xabs = 159954
C
w9548
159957 >= 25*xabs
25*xabs = 159957
B
w9549
160072 >= 25*xabs
25*xabs = 160072
A
w9550
160153 >= 25*xabs
25*xabs = 160153
B

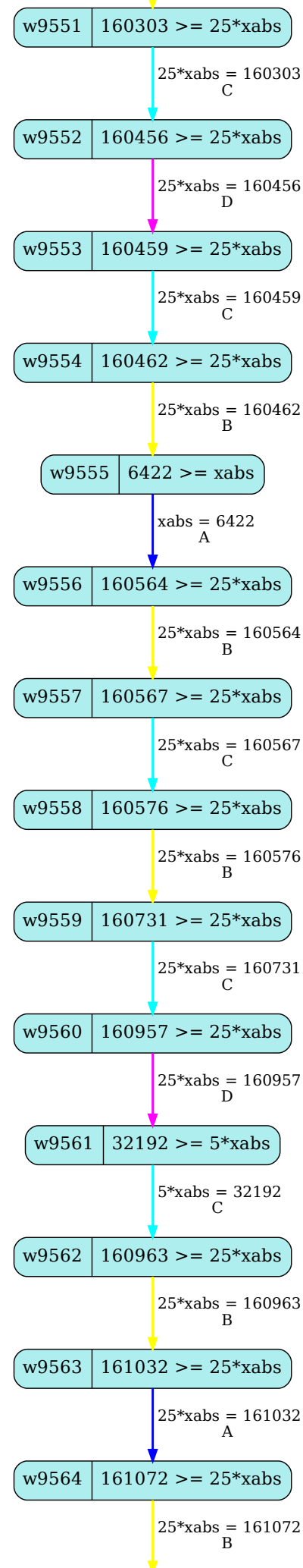
w9551
160303 >= 25*xabs
25*xabs = 160303
C
w9552
160456 >= 25*xabs
25*xabs = 160456
D
w9553
160459 >= 25*xabs
25*xabs = 160459
C
w9554
160462 >= 25*xabs
25*xabs = 160462
B
w9555
6422 >= xabs
xabs = 6422
A
w9556
160564 >= 25*xabs
25*xabs = 160564
B
w9557
160567 >= 25*xabs
25*xabs = 160567
C
w9558
160576 >= 25*xabs
25*xabs = 160576
B
w9559
160731 >= 25*xabs
25*xabs = 160731
C
w9560
160957 >= 25*xabs
25*xabs = 160957
D
w9561
32192 >= 5*xabs
5*xabs = 32192
C
w9562
160963 >= 25*xabs
25*xabs = 160963
B
w9563
161032 >= 25*xabs
25*xabs = 161032
A
w9564
161072 >= 25*xabs
25*xabs = 161072
B

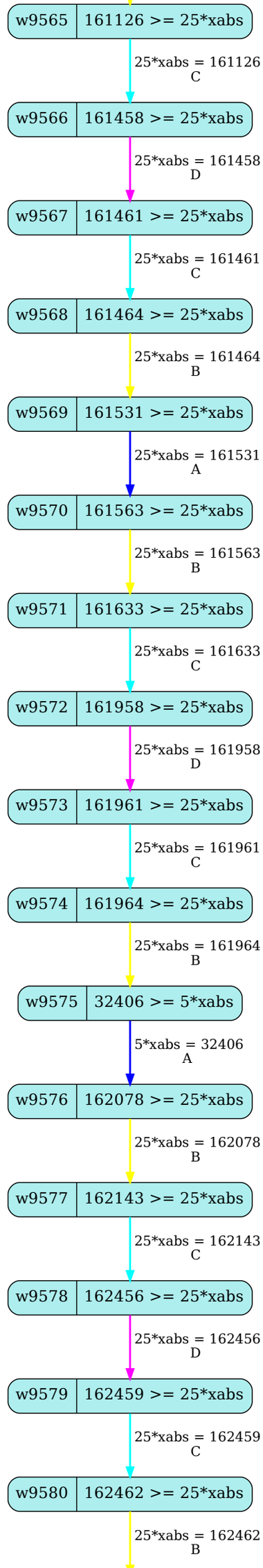
w9565
161126 >= 25*xabs
25*xabs = 161126
C
w9566
161458 >= 25*xabs
25*xabs = 161458
D
w9567
161461 >= 25*xabs
25*xabs = 161461
C
w9568
161464 >= 25*xabs
25*xabs = 161464
B
w9569
161531 >= 25*xabs
25*xabs = 161531
A
w9570
161563 >= 25*xabs
25*xabs = 161563
B
w9571
161633 >= 25*xabs
25*xabs = 161633
C
w9572
161958 >= 25*xabs
25*xabs = 161958
D
w9573
161961 >= 25*xabs
25*xabs = 161961
C
w9574
161964 >= 25*xabs
25*xabs = 161964
B
w9575
32406 >= 5*xabs
5*xabs = 32406
A
w9576
162078 >= 25*xabs
25*xabs = 162078
B
w9577
162143 >= 25*xabs
25*xabs = 162143
C
w9578
162456 >= 25*xabs
25*xabs = 162456
D
w9579
162459 >= 25*xabs
25*xabs = 162459
C
w9580
162462 >= 25*xabs
25*xabs = 162462
B

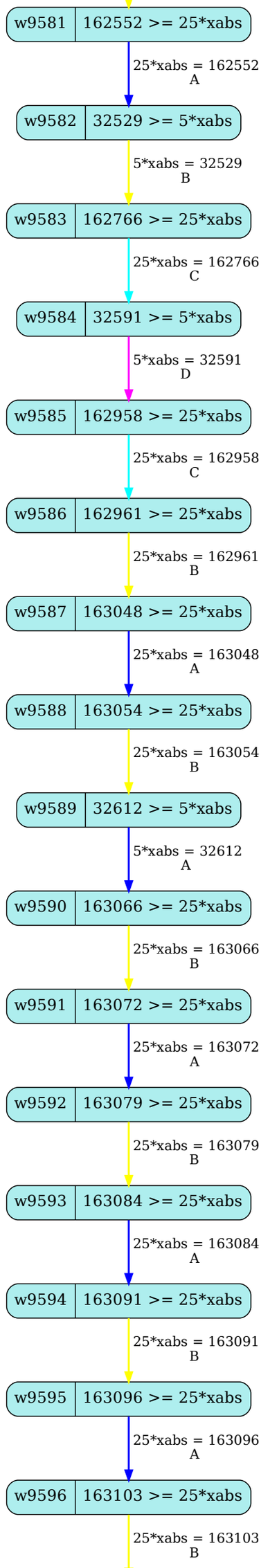
w9581
162552 >= 25*xabs
25*xabs = 162552
A
w9582
32529 >= 5*xabs
5*xabs = 32529
B
w9583
162766 >= 25*xabs
25*xabs = 162766
C
w9584
32591 >= 5*xabs
5*xabs = 32591
D
w9585
162958 >= 25*xabs
25*xabs = 162958
C
w9586
162961 >= 25*xabs
25*xabs = 162961
B
w9587
163048 >= 25*xabs
25*xabs = 163048
A
w9588
163054 >= 25*xabs
25*xabs = 163054
B
w9589
32612 >= 5*xabs
5*xabs = 32612
A
w9590
163066 >= 25*xabs
25*xabs = 163066
B
w9591
163072 >= 25*xabs
25*xabs = 163072
A
w9592
163079 >= 25*xabs
25*xabs = 163079
B
w9593
163084 >= 25*xabs
25*xabs = 163084
A
w9594
163091 >= 25*xabs
25*xabs = 163091
B
w9595
163096 >= 25*xabs
25*xabs = 163096
A
w9596
163103 >= 25*xabs
25*xabs = 163103
B

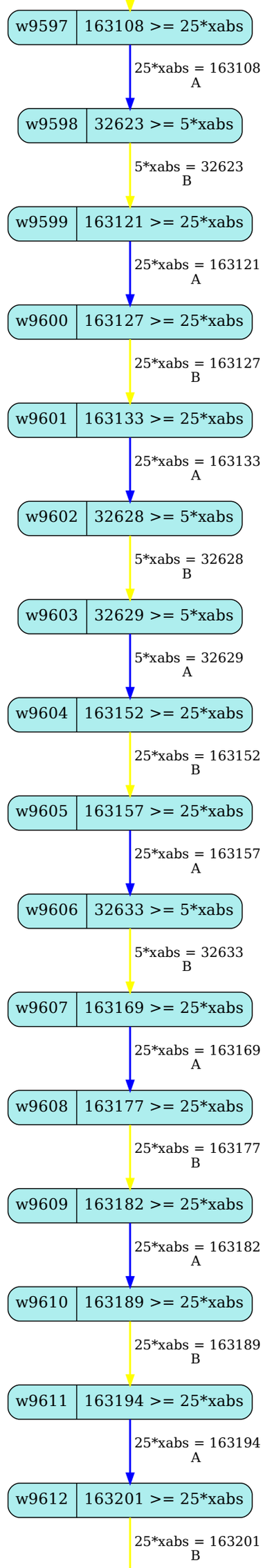
w9597
163108 >= 25*xabs
25*xabs = 163108
A
w9598
32623 >= 5*xabs
5*xabs = 32623
B
w9599
163121 >= 25*xabs
25*xabs = 163121
A
w9600
163127 >= 25*xabs
25*xabs = 163127
B
w9601
163133 >= 25*xabs
25*xabs = 163133
A
w9602
32628 >= 5*xabs
5*xabs = 32628
B
w9603
32629 >= 5*xabs
5*xabs = 32629
A
w9604
163152 >= 25*xabs
25*xabs = 163152
B
w9605
163157 >= 25*xabs
25*xabs = 163157
A
w9606
32633 >= 5*xabs
5*xabs = 32633
B
w9607
163169 >= 25*xabs
25*xabs = 163169
A
w9608
163177 >= 25*xabs
25*xabs = 163177
B
w9609
163182 >= 25*xabs
25*xabs = 163182
A
w9610
163189 >= 25*xabs
25*xabs = 163189
B
w9611
163194 >= 25*xabs
25*xabs = 163194
A
w9612
163201 >= 25*xabs
25*xabs = 163201
B

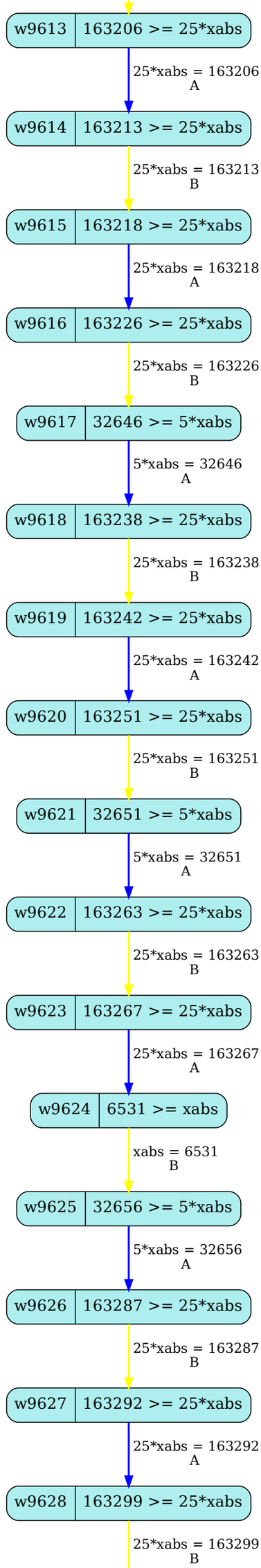
w9613
163206 >= 25*xabs
25*xabs = 163206
A
w9614
163213 >= 25*xabs
25*xabs = 163213
B
w9615
163218 >= 25*xabs
25*xabs = 163218
A
w9616
163226 >= 25*xabs
25*xabs = 163226
B
w9617
32646 >= 5*xabs
5*xabs = 32646
A
w9618
163238 >= 25*xabs
25*xabs = 163238
B
w9619
163242 >= 25*xabs
25*xabs = 163242
A
w9620
163251 >= 25*xabs
25*xabs = 163251
B
w9621
32651 >= 5*xabs
5*xabs = 32651
A
w9622
163263 >= 25*xabs
25*xabs = 163263
B
w9623
163267 >= 25*xabs
25*xabs = 163267
A
w9624
6531 >= xabs
xabs = 6531
B
w9625
32656 >= 5*xabs
5*xabs = 32656
A
w9626
163287 >= 25*xabs
25*xabs = 163287
B
w9627
163292 >= 25*xabs
25*xabs = 163292
A
w9628
163299 >= 25*xabs
25*xabs = 163299
B

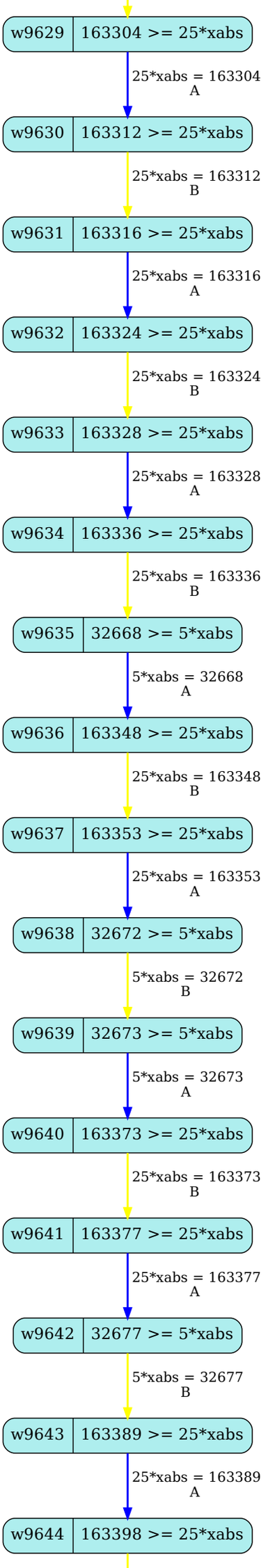
w9629
163304 >= 25*xabs
25*xabs = 163304
A
w9630
163312 >= 25*xabs
25*xabs = 163312
B
w9631
163316 >= 25*xabs
25*xabs = 163316
A
w9632
163324 >= 25*xabs
25*xabs = 163324
B
w9633
163328 >= 25*xabs
25*xabs = 163328
A
w9634
163336 >= 25*xabs
25*xabs = 163336
B
w9635
32668 >= 5*xabs
5*xabs = 32668
A
w9636
163348 >= 25*xabs
25*xabs = 163348
B
w9637
163353 >= 25*xabs
25*xabs = 163353
A
w9638
32672 >= 5*xabs
5*xabs = 32672
B
w9639
32673 >= 5*xabs
5*xabs = 32673
A
w9640
163373 >= 25*xabs
25*xabs = 163373
B
w9641
163377 >= 25*xabs
25*xabs = 163377
A
w9642
32677 >= 5*xabs
5*xabs = 32677
B
w9643
163389 >= 25*xabs
25*xabs = 163389
A
w9644
163398 >= 25*xabs

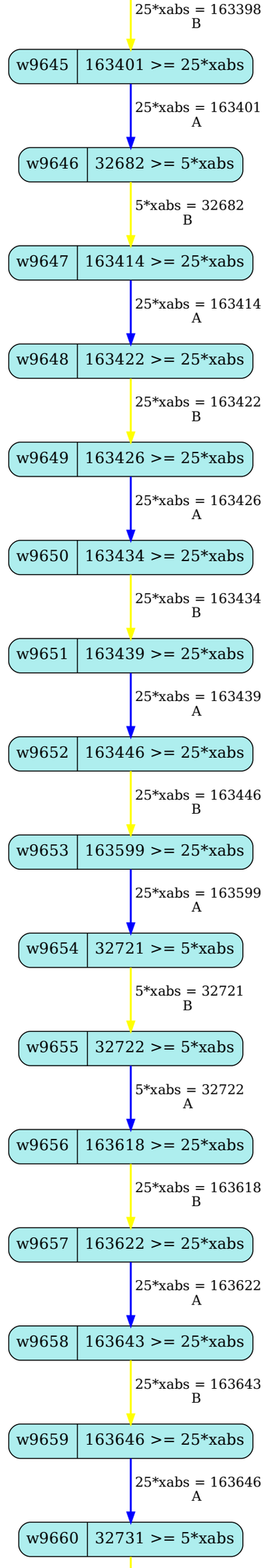
25*xabs = 163398
B
w9645
163401 >= 25*xabs
25*xabs = 163401
A
w9646
32682 >= 5*xabs
5*xabs = 32682
B
w9647
163414 >= 25*xabs
25*xabs = 163414
A
w9648
163422 >= 25*xabs
25*xabs = 163422
B
w9649
163426 >= 25*xabs
25*xabs = 163426
A
w9650
163434 >= 25*xabs
25*xabs = 163434
B
w9651
163439 >= 25*xabs
25*xabs = 163439
A
w9652
163446 >= 25*xabs
25*xabs = 163446
B
w9653
163599 >= 25*xabs
25*xabs = 163599
A
w9654
32721 >= 5*xabs
5*xabs = 32721
B
w9655
32722 >= 5*xabs
5*xabs = 32722
A
w9656
163618 >= 25*xabs
25*xabs = 163618
B
w9657
163622 >= 25*xabs
25*xabs = 163622
A
w9658
163643 >= 25*xabs
25*xabs = 163643
B
w9659
163646 >= 25*xabs
25*xabs = 163646
A
w9660
32731 >= 5*xabs

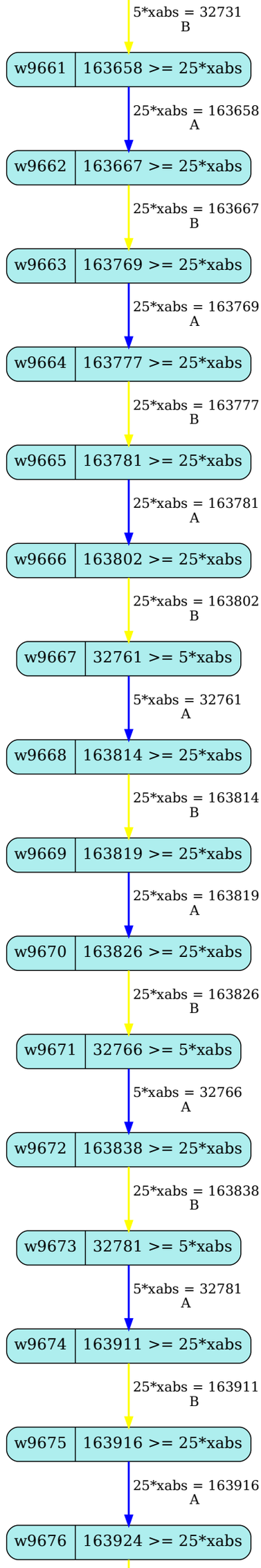
5*xabs = 32731
B
w9661
163658 >= 25*xabs
25*xabs = 163658
A
w9662
163667 >= 25*xabs
25*xabs = 163667
B
w9663
163769 >= 25*xabs
25*xabs = 163769
A
w9664
163777 >= 25*xabs
25*xabs = 163777
B
w9665
163781 >= 25*xabs
25*xabs = 163781
A
w9666
163802 >= 25*xabs
25*xabs = 163802
B
w9667
32761 >= 5*xabs
5*xabs = 32761
A
w9668
163814 >= 25*xabs
25*xabs = 163814
B
w9669
163819 >= 25*xabs
25*xabs = 163819
A
w9670
163826 >= 25*xabs
25*xabs = 163826
B
w9671
32766 >= 5*xabs
5*xabs = 32766
A
w9672
163838 >= 25*xabs
25*xabs = 163838
B
w9673
32781 >= 5*xabs
5*xabs = 32781
A
w9674
163911 >= 25*xabs
25*xabs = 163911
B
w9675
163916 >= 25*xabs
25*xabs = 163916
A
w9676
163924 >= 25*xabs

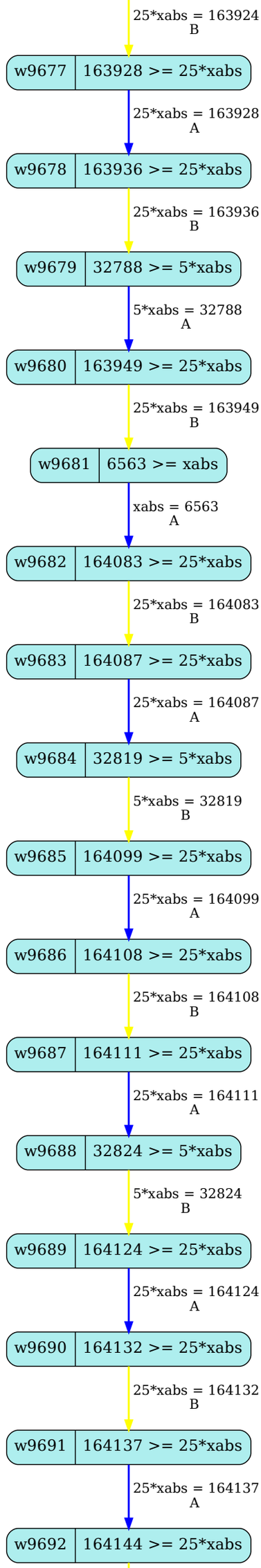
25*xabs = 163924
B
w9677
163928 >= 25*xabs
25*xabs = 163928
A
w9678
163936 >= 25*xabs
25*xabs = 163936
B
w9679
32788 >= 5*xabs
5*xabs = 32788
A
w9680
163949 >= 25*xabs
25*xabs = 163949
B
w9681
6563 >= xabs
xabs = 6563
A
w9682
164083 >= 25*xabs
25*xabs = 164083
B
w9683
164087 >= 25*xabs
25*xabs = 164087
A
w9684
32819 >= 5*xabs
5*xabs = 32819
B
w9685
164099 >= 25*xabs
25*xabs = 164099
A
w9686
164108 >= 25*xabs
25*xabs = 164108
B
w9687
164111 >= 25*xabs
25*xabs = 164111
A
w9688
32824 >= 5*xabs
5*xabs = 32824
B
w9689
164124 >= 25*xabs
25*xabs = 164124
A
w9690
164132 >= 25*xabs
25*xabs = 164132
B
w9691
164137 >= 25*xabs
25*xabs = 164137
A
w9692
164144 >= 25*xabs

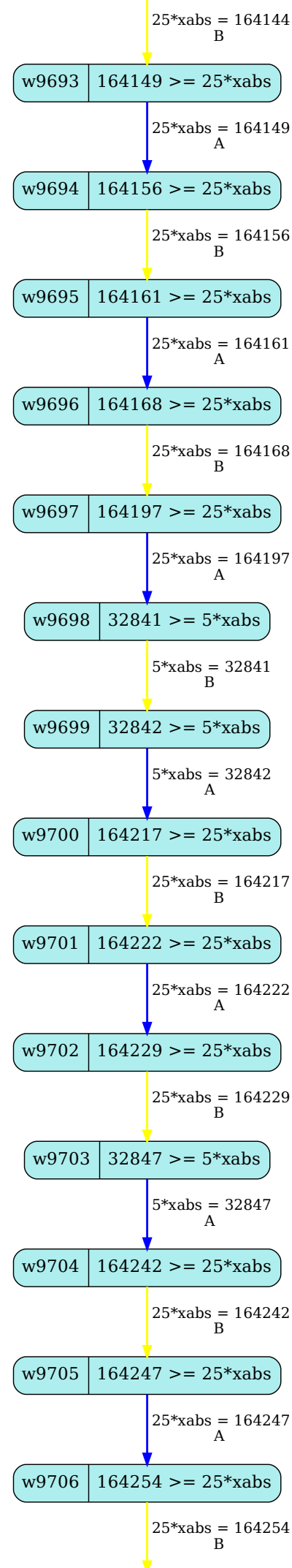
25*xabs = 164144
B
w9693
164149 >= 25*xabs
25*xabs = 164149
A
w9694
164156 >= 25*xabs
25*xabs = 164156
B
w9695
164161 >= 25*xabs
25*xabs = 164161
A
w9696
164168 >= 25*xabs
25*xabs = 164168
B
w9697
164197 >= 25*xabs
25*xabs = 164197
A
w9698
32841 >= 5*xabs
5*xabs = 32841
B
w9699
32842 >= 5*xabs
5*xabs = 32842
A
w9700
164217 >= 25*xabs
25*xabs = 164217
B
w9701
164222 >= 25*xabs
25*xabs = 164222
A
w9702
164229 >= 25*xabs
25*xabs = 164229
B
w9703
32847 >= 5*xabs
5*xabs = 32847
A
w9704
164242 >= 25*xabs
25*xabs = 164242
B
w9705
164247 >= 25*xabs
25*xabs = 164247
A
w9706
164254 >= 25*xabs
25*xabs = 164254
B

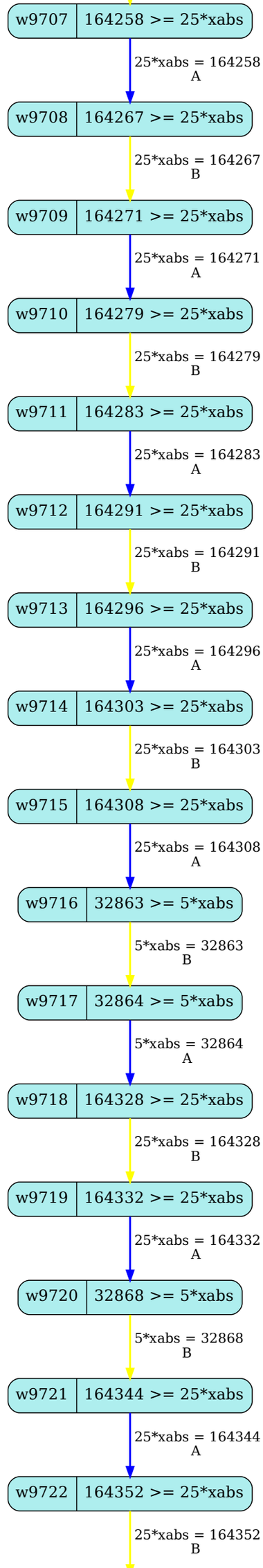
w9707
164258 >= 25*xabs
25*xabs = 164258
A
w9708
164267 >= 25*xabs
25*xabs = 164267
B
w9709
164271 >= 25*xabs
25*xabs = 164271
A
w9710
164279 >= 25*xabs
25*xabs = 164279
B
w9711
164283 >= 25*xabs
25*xabs = 164283
A
w9712
164291 >= 25*xabs
25*xabs = 164291
B
w9713
164296 >= 25*xabs
25*xabs = 164296
A
w9714
164303 >= 25*xabs
25*xabs = 164303
B
w9715
164308 >= 25*xabs
25*xabs = 164308
A
w9716
32863 >= 5*xabs
5*xabs = 32863
B
w9717
32864 >= 5*xabs
5*xabs = 32864
A
w9718
164328 >= 25*xabs
25*xabs = 164328
B
w9719
164332 >= 25*xabs
25*xabs = 164332
A
w9720
32868 >= 5*xabs
5*xabs = 32868
B
w9721
164344 >= 25*xabs
25*xabs = 164344
A
w9722
164352 >= 25*xabs
25*xabs = 164352
B

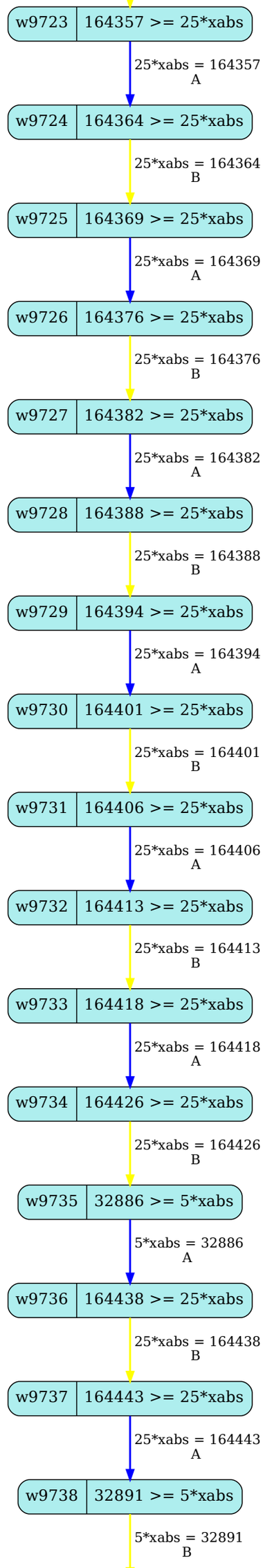
w9723
164357 >= 25*xabs
25*xabs = 164357
A
w9724
164364 >= 25*xabs
25*xabs = 164364
B
w9725
164369 >= 25*xabs
25*xabs = 164369
A
w9726
164376 >= 25*xabs
25*xabs = 164376
B
w9727
164382 >= 25*xabs
25*xabs = 164382
A
w9728
164388 >= 25*xabs
25*xabs = 164388
B
w9729
164394 >= 25*xabs
25*xabs = 164394
A
w9730
164401 >= 25*xabs
25*xabs = 164401
B
w9731
164406 >= 25*xabs
25*xabs = 164406
A
w9732
164413 >= 25*xabs
25*xabs = 164413
B
w9733
164418 >= 25*xabs
25*xabs = 164418
A
w9734
164426 >= 25*xabs
25*xabs = 164426
B
w9735
32886 >= 5*xabs
5*xabs = 32886
A
w9736
164438 >= 25*xabs
25*xabs = 164438
B
w9737
164443 >= 25*xabs
25*xabs = 164443
A
w9738
32891 >= 5*xabs
5*xabs = 32891
B

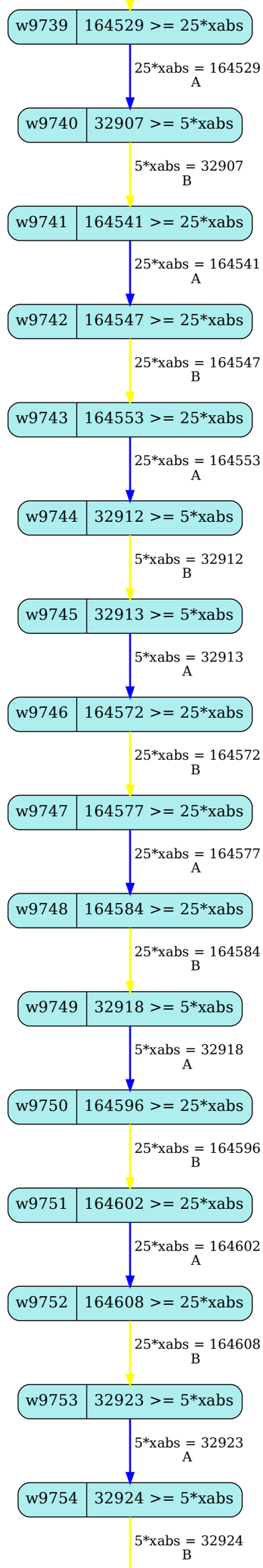
w9739
164529 >= 25*xabs
25*xabs = 164529
A
w9740
32907 >= 5*xabs
5*xabs = 32907
B
w9741
164541 >= 25*xabs
25*xabs = 164541
A
w9742
164547 >= 25*xabs
25*xabs = 164547
B
w9743
164553 >= 25*xabs
25*xabs = 164553
A
w9744
32912 >= 5*xabs
5*xabs = 32912
B
w9745
32913 >= 5*xabs
5*xabs = 32913
A
w9746
164572 >= 25*xabs
25*xabs = 164572
B
w9747
164577 >= 25*xabs
25*xabs = 164577
A
w9748
164584 >= 25*xabs
25*xabs = 164584
B
w9749
32918 >= 5*xabs
5*xabs = 32918
A
w9750
164596 >= 25*xabs
25*xabs = 164596
B
w9751
164602 >= 25*xabs
25*xabs = 164602
A
w9752
164608 >= 25*xabs
25*xabs = 164608
B
w9753
32923 >= 5*xabs
5*xabs = 32923
A
w9754
32924 >= 5*xabs
5*xabs = 32924
B

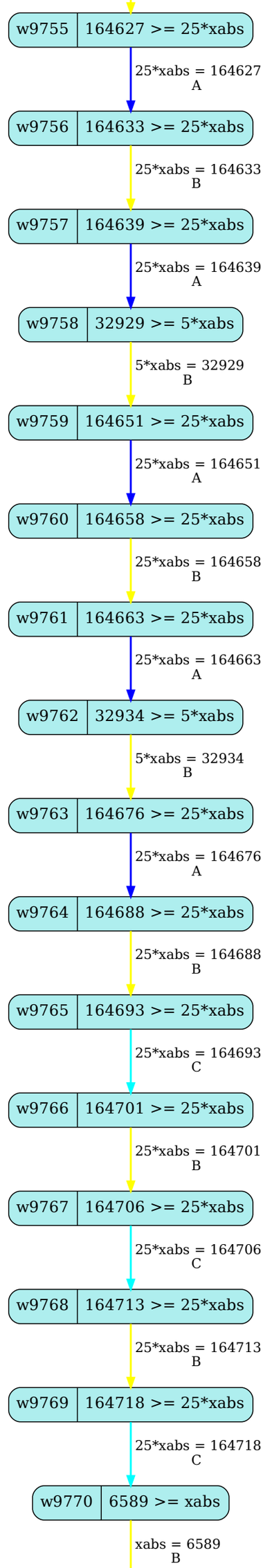
w9755
164627 >= 25*xabs
25*xabs = 164627
A
w9756
164633 >= 25*xabs
25*xabs = 164633
B
w9757
164639 >= 25*xabs
25*xabs = 164639
A
w9758
32929 >= 5*xabs
5*xabs = 32929
B
w9759
164651 >= 25*xabs
25*xabs = 164651
A
w9760
164658 >= 25*xabs
25*xabs = 164658
B
w9761
164663 >= 25*xabs
25*xabs = 164663
A
w9762
32934 >= 5*xabs
5*xabs = 32934
B
w9763
164676 >= 25*xabs
25*xabs = 164676
A
w9764
164688 >= 25*xabs
25*xabs = 164688
B
w9765
164693 >= 25*xabs
25*xabs = 164693
C
w9766
164701 >= 25*xabs
25*xabs = 164701
B
w9767
164706 >= 25*xabs
25*xabs = 164706
C
w9768
164713 >= 25*xabs
25*xabs = 164713
B
w9769
164718 >= 25*xabs
25*xabs = 164718
C
w9770
6589 >= xabs
xabs = 6589
B

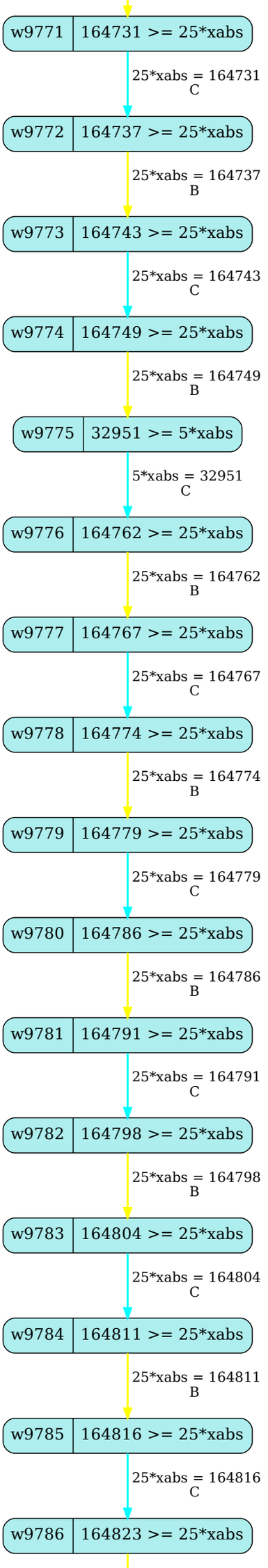
w9771
164731 >= 25*xabs
25*xabs = 164731
C
w9772
164737 >= 25*xabs
25*xabs = 164737
B
w9773
164743 >= 25*xabs
25*xabs = 164743
C
w9774
164749 >= 25*xabs
25*xabs = 164749
B
w9775
32951 >= 5*xabs
5*xabs = 32951
C
w9776
164762 >= 25*xabs
25*xabs = 164762
B
w9777
164767 >= 25*xabs
25*xabs = 164767
C
w9778
164774 >= 25*xabs
25*xabs = 164774
B
w9779
164779 >= 25*xabs
25*xabs = 164779
C
w9780
164786 >= 25*xabs
25*xabs = 164786
B
w9781
164791 >= 25*xabs
25*xabs = 164791
C
w9782
164798 >= 25*xabs
25*xabs = 164798
B
w9783
164804 >= 25*xabs
25*xabs = 164804
C
w9784
164811 >= 25*xabs
25*xabs = 164811
B
w9785
164816 >= 25*xabs
25*xabs = 164816
C
w9786
164823 >= 25*xabs

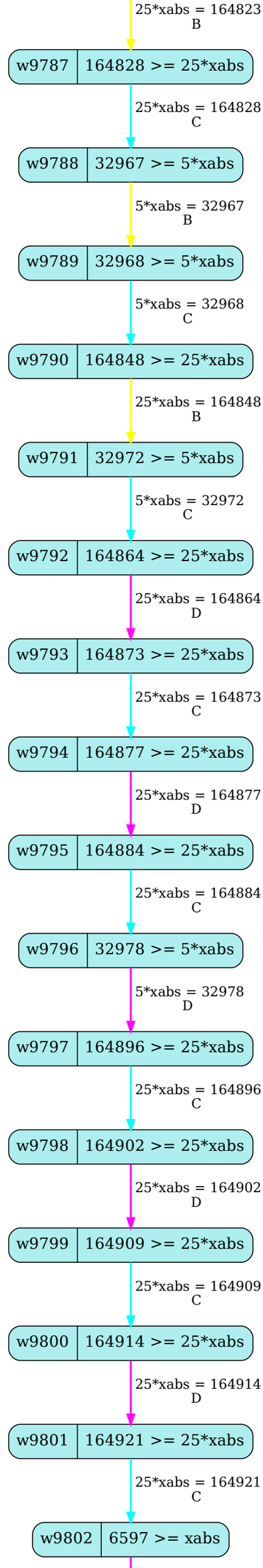
25*xabs = 164823
B
w9787
164828 >= 25*xabs
25*xabs = 164828
C
w9788
32967 >= 5*xabs
5*xabs = 32967
B
w9789
32968 >= 5*xabs
5*xabs = 32968
C
w9790
164848 >= 25*xabs
25*xabs = 164848
B
w9791
32972 >= 5*xabs
5*xabs = 32972
C
w9792
164864 >= 25*xabs
25*xabs = 164864
D
w9793
164873 >= 25*xabs
25*xabs = 164873
C
w9794
164877 >= 25*xabs
25*xabs = 164877
D
w9795
164884 >= 25*xabs
25*xabs = 164884
C
w9796
32978 >= 5*xabs
5*xabs = 32978
D
w9797
164896 >= 25*xabs
25*xabs = 164896
C
w9798
164902 >= 25*xabs
25*xabs = 164902
D
w9799
164909 >= 25*xabs
25*xabs = 164909
C
w9800
164914 >= 25*xabs
25*xabs = 164914
D
w9801
164921 >= 25*xabs
25*xabs = 164921
C
w9802
6597 >= xabs

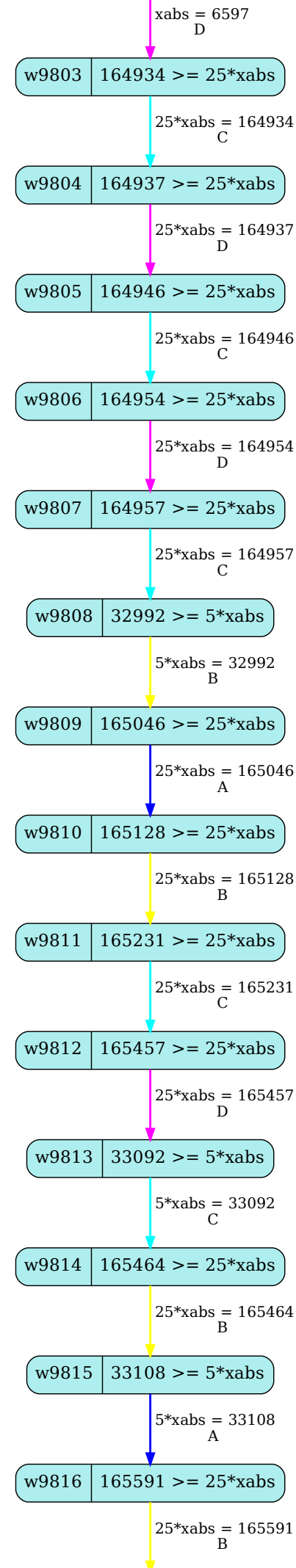
xabs = 6597
D
w9803
164934 >= 25*xabs
25*xabs = 164934
C
w9804
164937 >= 25*xabs
25*xabs = 164937
D
w9805
164946 >= 25*xabs
25*xabs = 164946
C
w9806
164954 >= 25*xabs
25*xabs = 164954
D
w9807
164957 >= 25*xabs
25*xabs = 164957
C
w9808
32992 >= 5*xabs
5*xabs = 32992
B
w9809
165046 >= 25*xabs
25*xabs = 165046
A
w9810
165128 >= 25*xabs
25*xabs = 165128
B
w9811
165231 >= 25*xabs
25*xabs = 165231
C
w9812
165457 >= 25*xabs
25*xabs = 165457
D
w9813
33092 >= 5*xabs
5*xabs = 33092
C
w9814
165464 >= 25*xabs
25*xabs = 165464
B
w9815
33108 >= 5*xabs
5*xabs = 33108
A
w9816
165591 >= 25*xabs
25*xabs = 165591
B

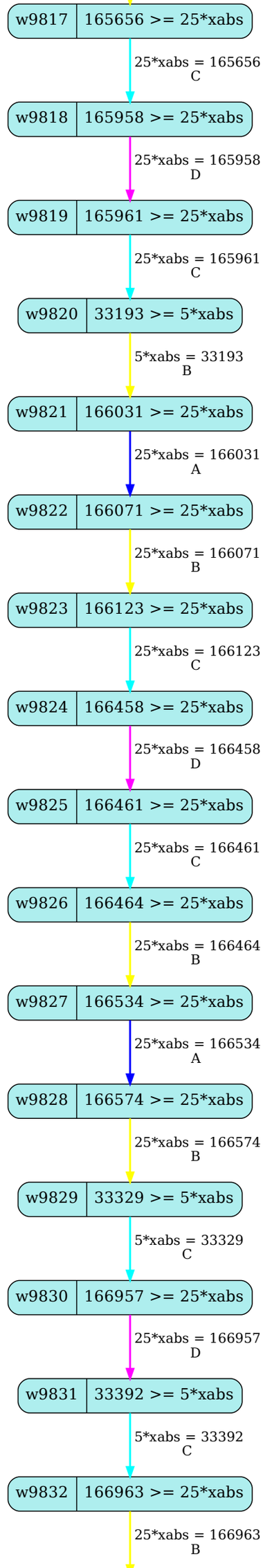
w9817
165656 >= 25*xabs
25*xabs = 165656
C
w9818
165958 >= 25*xabs
25*xabs = 165958
D
w9819
165961 >= 25*xabs
25*xabs = 165961
C
w9820
33193 >= 5*xabs
5*xabs = 33193
B
w9821
166031 >= 25*xabs
25*xabs = 166031
A
w9822
166071 >= 25*xabs
25*xabs = 166071
B
w9823
166123 >= 25*xabs
25*xabs = 166123
C
w9824
166458 >= 25*xabs
25*xabs = 166458
D
w9825
166461 >= 25*xabs
25*xabs = 166461
C
w9826
166464 >= 25*xabs
25*xabs = 166464
B
w9827
166534 >= 25*xabs
25*xabs = 166534
A
w9828
166574 >= 25*xabs
25*xabs = 166574
B
w9829
33329 >= 5*xabs
5*xabs = 33329
C
w9830
166957 >= 25*xabs
25*xabs = 166957
D
w9831
33392 >= 5*xabs
5*xabs = 33392
C
w9832
166963 >= 25*xabs
25*xabs = 166963
B

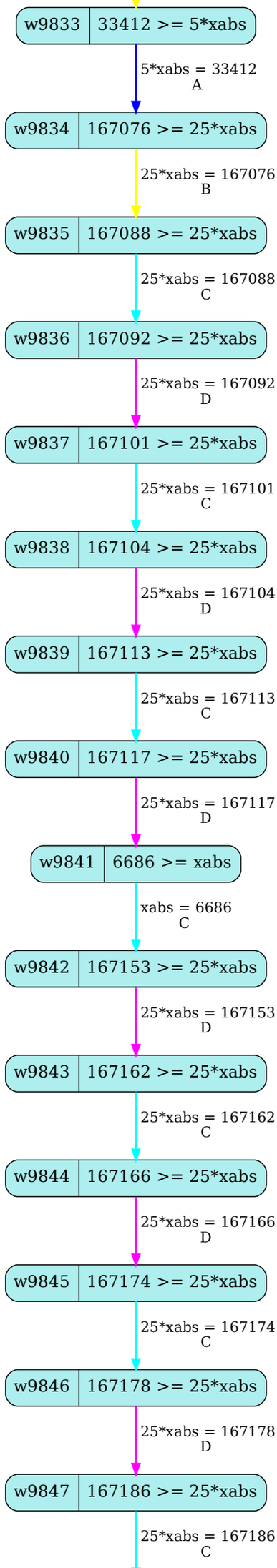
w9833
33412 >= 5*xabs
5*xabs = 33412
A
w9834
167076 >= 25*xabs
25*xabs = 167076
B
w9835
167088 >= 25*xabs
25*xabs = 167088
C
w9836
167092 >= 25*xabs
25*xabs = 167092
D
w9837
167101 >= 25*xabs
25*xabs = 167101
C
w9838
167104 >= 25*xabs
25*xabs = 167104
D
w9839
167113 >= 25*xabs
25*xabs = 167113
C
w9840
167117 >= 25*xabs
25*xabs = 167117
D
w9841
6686 >= xabs
xabs = 6686
C
w9842
167153 >= 25*xabs
25*xabs = 167153
D
w9843
167162 >= 25*xabs
25*xabs = 167162
C
w9844
167166 >= 25*xabs
25*xabs = 167166
D
w9845
167174 >= 25*xabs
25*xabs = 167174
C
w9846
167178 >= 25*xabs
25*xabs = 167178
D
w9847
167186 >= 25*xabs
25*xabs = 167186
C

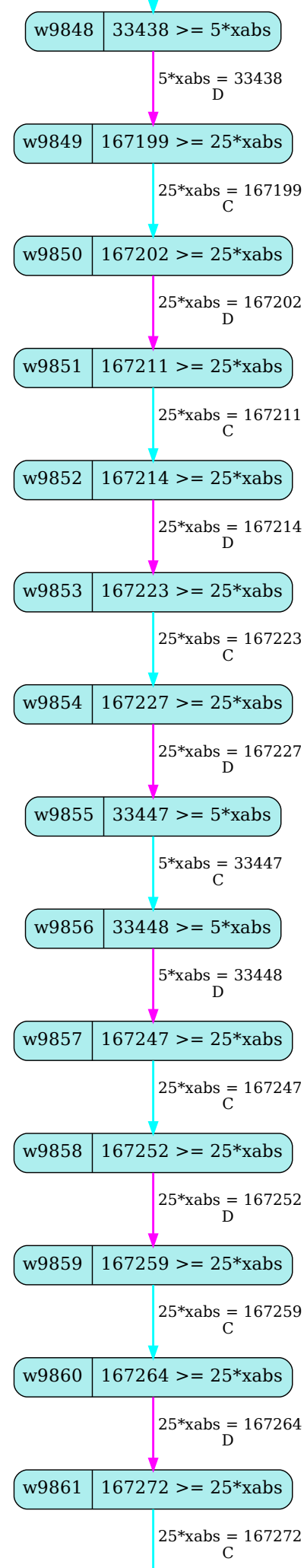
w9848
33438 >= 5*xabs
5*xabs = 33438
D
w9849
167199 >= 25*xabs
25*xabs = 167199
C
w9850
167202 >= 25*xabs
25*xabs = 167202
D
w9851
167211 >= 25*xabs
25*xabs = 167211
C
w9852
167214 >= 25*xabs
25*xabs = 167214
D
w9853
167223 >= 25*xabs
25*xabs = 167223
C
w9854
167227 >= 25*xabs
25*xabs = 167227
D
w9855
33447 >= 5*xabs
5*xabs = 33447
C
w9856
33448 >= 5*xabs
5*xabs = 33448
D
w9857
167247 >= 25*xabs
25*xabs = 167247
C
w9858
167252 >= 25*xabs
25*xabs = 167252
D
w9859
167259 >= 25*xabs
25*xabs = 167259
C
w9860
167264 >= 25*xabs
25*xabs = 167264
D
w9861
167272 >= 25*xabs
25*xabs = 167272
C

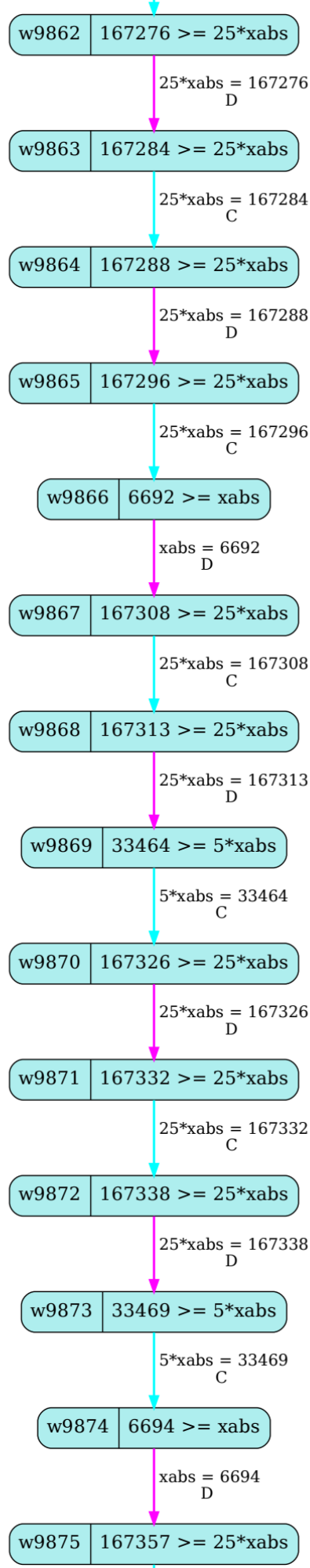
w9862
167276 >= 25*xabs
25*xabs = 167276
D
w9863
167284 >= 25*xabs
25*xabs = 167284
C
w9864
167288 >= 25*xabs
25*xabs = 167288
D
w9865
167296 >= 25*xabs
25*xabs = 167296
C
w9866
6692 >= xabs
xabs = 6692
D
w9867
167308 >= 25*xabs
25*xabs = 167308
C
w9868
167313 >= 25*xabs
25*xabs = 167313
D
w9869
33464 >= 5*xabs
5*xabs = 33464
C
w9870
167326 >= 25*xabs
25*xabs = 167326
D
w9871
167332 >= 25*xabs
25*xabs = 167332
C
w9872
167338 >= 25*xabs
25*xabs = 167338
D
w9873
33469 >= 5*xabs
5*xabs = 33469
C
w9874
6694 >= xabs
xabs = 6694
D
w9875
167357 >= 25*xabs

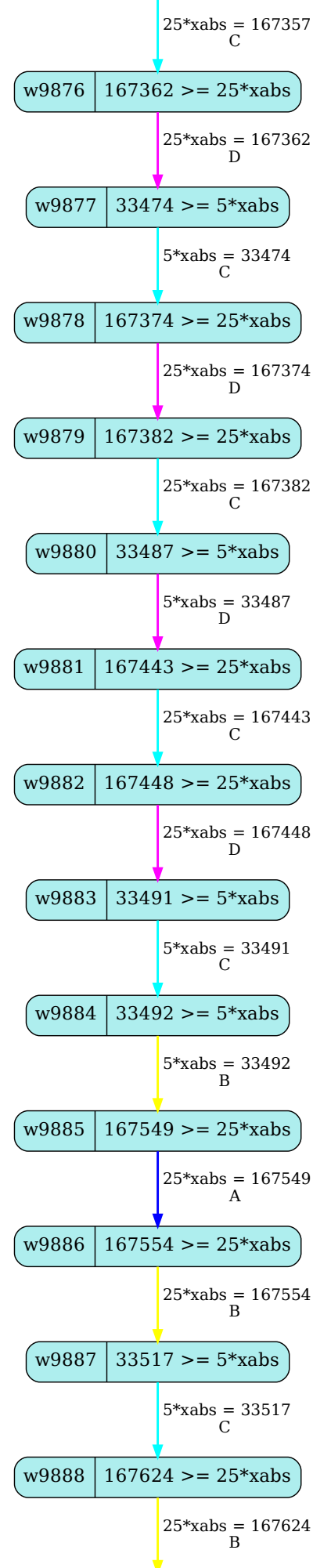
25*xabs = 167357
C
w9876
167362 >= 25*xabs
25*xabs = 167362
D
w9877
33474 >= 5*xabs
5*xabs = 33474
C
w9878
167374 >= 25*xabs
25*xabs = 167374
D
w9879
167382 >= 25*xabs
25*xabs = 167382
C
w9880
33487 >= 5*xabs
5*xabs = 33487
D
w9881
167443 >= 25*xabs
25*xabs = 167443
C
w9882
167448 >= 25*xabs
25*xabs = 167448
D
w9883
33491 >= 5*xabs
5*xabs = 33491
C
w9884
33492 >= 5*xabs
5*xabs = 33492
B
w9885
167549 >= 25*xabs
25*xabs = 167549
A
w9886
167554 >= 25*xabs
25*xabs = 167554
B
w9887
33517 >= 5*xabs
5*xabs = 33517
C
w9888
167624 >= 25*xabs
25*xabs = 167624
B

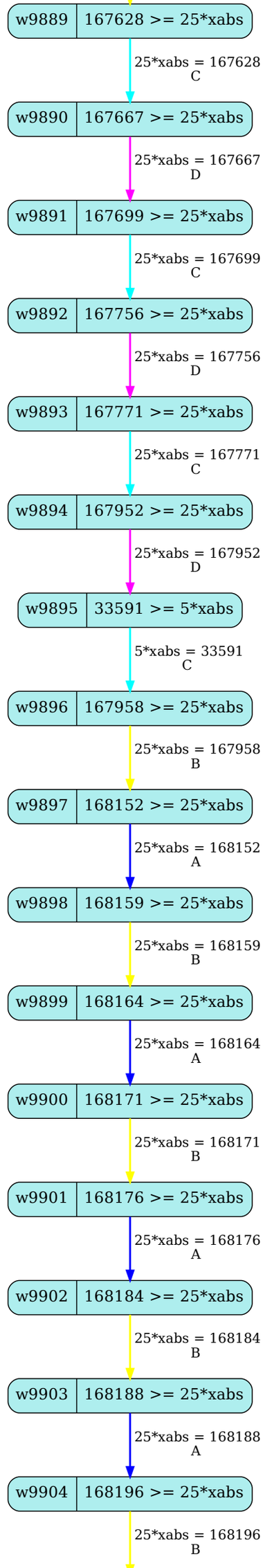
w9889
167628 >= 25*xabs
25*xabs = 167628
C
w9890
167667 >= 25*xabs
25*xabs = 167667
D
w9891
167699 >= 25*xabs
25*xabs = 167699
C
w9892
167756 >= 25*xabs
25*xabs = 167756
D
w9893
167771 >= 25*xabs
25*xabs = 167771
C
w9894
167952 >= 25*xabs
25*xabs = 167952
D
w9895
33591 >= 5*xabs
5*xabs = 33591
C
w9896
167958 >= 25*xabs
25*xabs = 167958
B
w9897
168152 >= 25*xabs
25*xabs = 168152
A
w9898
168159 >= 25*xabs
25*xabs = 168159
B
w9899
168164 >= 25*xabs
25*xabs = 168164
A
w9900
168171 >= 25*xabs
25*xabs = 168171
B
w9901
168176 >= 25*xabs
25*xabs = 168176
A
w9902
168184 >= 25*xabs
25*xabs = 168184
B
w9903
168188 >= 25*xabs
25*xabs = 168188
A
w9904
168196 >= 25*xabs
25*xabs = 168196
B

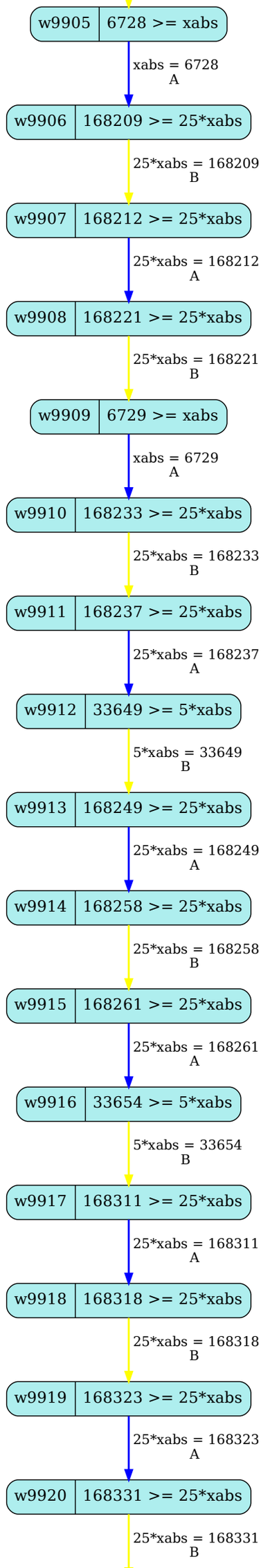
w9905
6728 >= xabs
xabs = 6728
A
w9906
168209 >= 25*xabs
25*xabs = 168209
B
w9907
168212 >= 25*xabs
25*xabs = 168212
A
w9908
168221 >= 25*xabs
25*xabs = 168221
B
w9909
6729 >= xabs
xabs = 6729
A
w9910
168233 >= 25*xabs
25*xabs = 168233
B
w9911
168237 >= 25*xabs
25*xabs = 168237
A
w9912
33649 >= 5*xabs
5*xabs = 33649
B
w9913
168249 >= 25*xabs
25*xabs = 168249
A
w9914
168258 >= 25*xabs
25*xabs = 168258
B
w9915
168261 >= 25*xabs
25*xabs = 168261
A
w9916
33654 >= 5*xabs
5*xabs = 33654
B
w9917
168311 >= 25*xabs
25*xabs = 168311
A
w9918
168318 >= 25*xabs
25*xabs = 168318
B
w9919
168323 >= 25*xabs
25*xabs = 168323
A
w9920
168331 >= 25*xabs
25*xabs = 168331
B

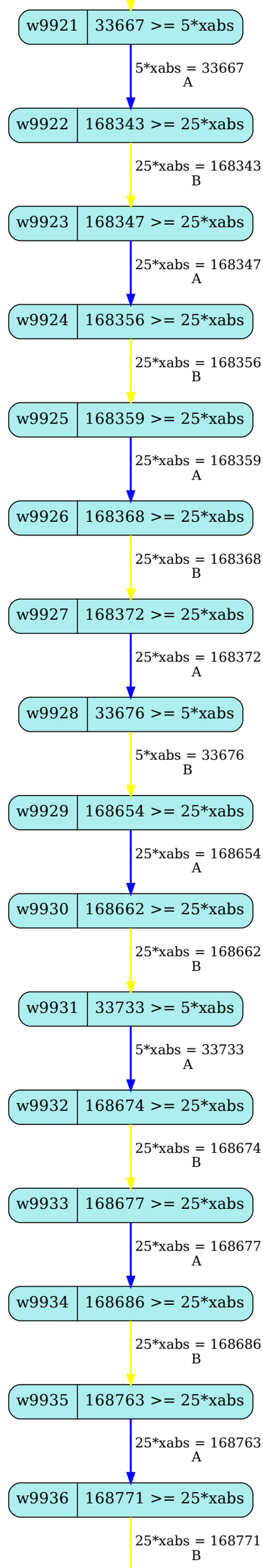
w9921
33667 >= 5*xabs
5*xabs = 33667
A
w9922
168343 >= 25*xabs
25*xabs = 168343
B
w9923
168347 >= 25*xabs
25*xabs = 168347
A
w9924
168356 >= 25*xabs
25*xabs = 168356
B
w9925
168359 >= 25*xabs
25*xabs = 168359
A
w9926
168368 >= 25*xabs
25*xabs = 168368
B
w9927
168372 >= 25*xabs
25*xabs = 168372
A
w9928
33676 >= 5*xabs
5*xabs = 33676
B
w9929
168654 >= 25*xabs
25*xabs = 168654
A
w9930
168662 >= 25*xabs
25*xabs = 168662
B
w9931
33733 >= 5*xabs
5*xabs = 33733
A
w9932
168674 >= 25*xabs
25*xabs = 168674
B
w9933
168677 >= 25*xabs
25*xabs = 168677
A
w9934
168686 >= 25*xabs
25*xabs = 168686
B
w9935
168763 >= 25*xabs
25*xabs = 168763
A
w9936
168771 >= 25*xabs
25*xabs = 168771
B

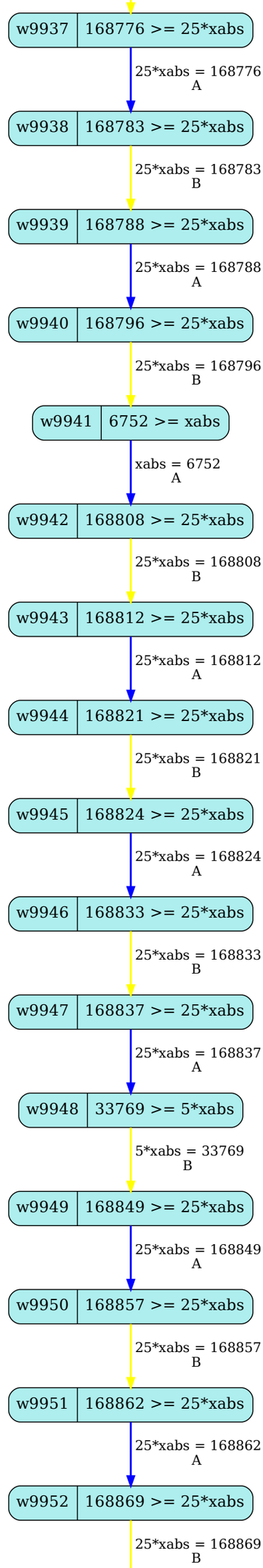
w9937
168776 >= 25*xabs
25*xabs = 168776
A
w9938
168783 >= 25*xabs
25*xabs = 168783
B
w9939
168788 >= 25*xabs
25*xabs = 168788
A
w9940
168796 >= 25*xabs
25*xabs = 168796
B
w9941
6752 >= xabs
xabs = 6752
A
w9942
168808 >= 25*xabs
25*xabs = 168808
B
w9943
168812 >= 25*xabs
25*xabs = 168812
A
w9944
168821 >= 25*xabs
25*xabs = 168821
B
w9945
168824 >= 25*xabs
25*xabs = 168824
A
w9946
168833 >= 25*xabs
25*xabs = 168833
B
w9947
168837 >= 25*xabs
25*xabs = 168837
A
w9948
33769 >= 5*xabs
5*xabs = 33769
B
w9949
168849 >= 25*xabs
25*xabs = 168849
A
w9950
168857 >= 25*xabs
25*xabs = 168857
B
w9951
168862 >= 25*xabs
25*xabs = 168862
A
w9952
168869 >= 25*xabs
25*xabs = 168869
B

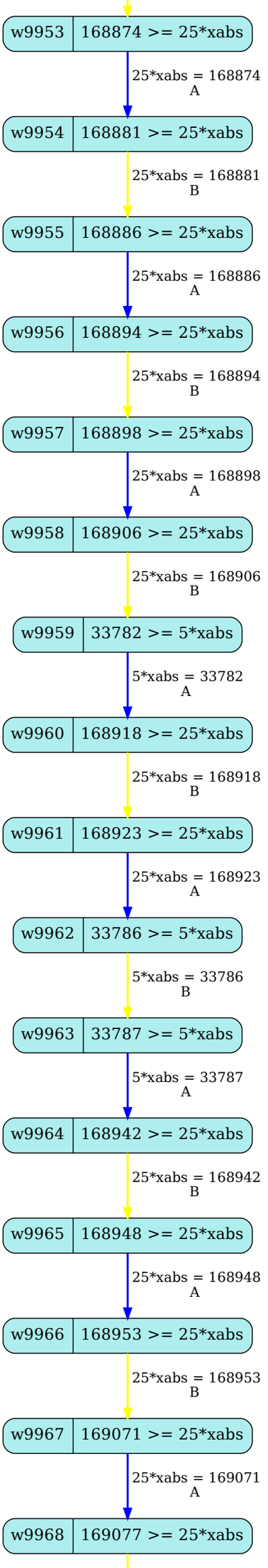
w9953
168874 >= 25*xabs
25*xabs = 168874
A
w9954
168881 >= 25*xabs
25*xabs = 168881
B
w9955
168886 >= 25*xabs
25*xabs = 168886
A
w9956
168894 >= 25*xabs
25*xabs = 168894
B
w9957
168898 >= 25*xabs
25*xabs = 168898
A
w9958
168906 >= 25*xabs
25*xabs = 168906
B
w9959
33782 >= 5*xabs
5*xabs = 33782
A
w9960
168918 >= 25*xabs
25*xabs = 168918
B
w9961
168923 >= 25*xabs
25*xabs = 168923
A
w9962
33786 >= 5*xabs
5*xabs = 33786
B
w9963
33787 >= 5*xabs
5*xabs = 33787
A
w9964
168942 >= 25*xabs
25*xabs = 168942
B
w9965
168948 >= 25*xabs
25*xabs = 168948
A
w9966
168953 >= 25*xabs
25*xabs = 168953
B
w9967
169071 >= 25*xabs
25*xabs = 169071
A
w9968
169077 >= 25*xabs

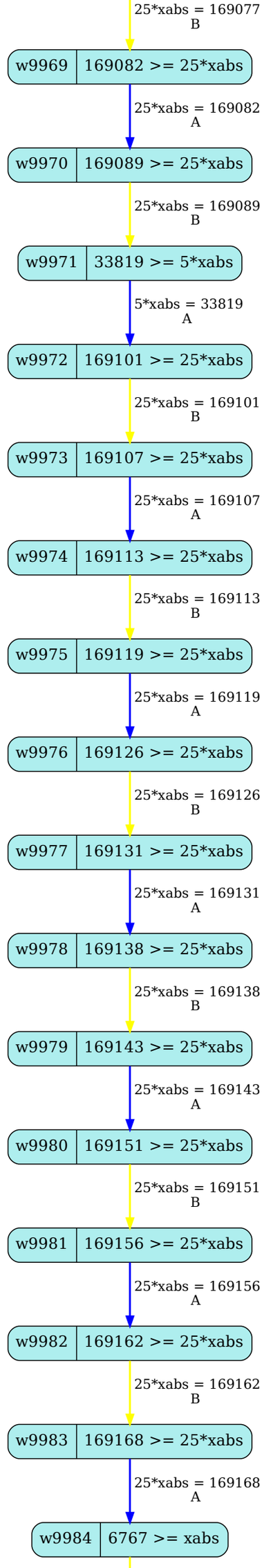
25*xabs = 169077
B
w9969
169082 >= 25*xabs
25*xabs = 169082
A
w9970
169089 >= 25*xabs
25*xabs = 169089
B
w9971
33819 >= 5*xabs
5*xabs = 33819
A
w9972
169101 >= 25*xabs
25*xabs = 169101
B
w9973
169107 >= 25*xabs
25*xabs = 169107
A
w9974
169113 >= 25*xabs
25*xabs = 169113
B
w9975
169119 >= 25*xabs
25*xabs = 169119
A
w9976
169126 >= 25*xabs
25*xabs = 169126
B
w9977
169131 >= 25*xabs
25*xabs = 169131
A
w9978
169138 >= 25*xabs
25*xabs = 169138
B
w9979
169143 >= 25*xabs
25*xabs = 169143
A
w9980
169151 >= 25*xabs
25*xabs = 169151
B
w9981
169156 >= 25*xabs
25*xabs = 169156
A
w9982
169162 >= 25*xabs
25*xabs = 169162
B
w9983
169168 >= 25*xabs
25*xabs = 169168
A
w9984
6767 >= xabs

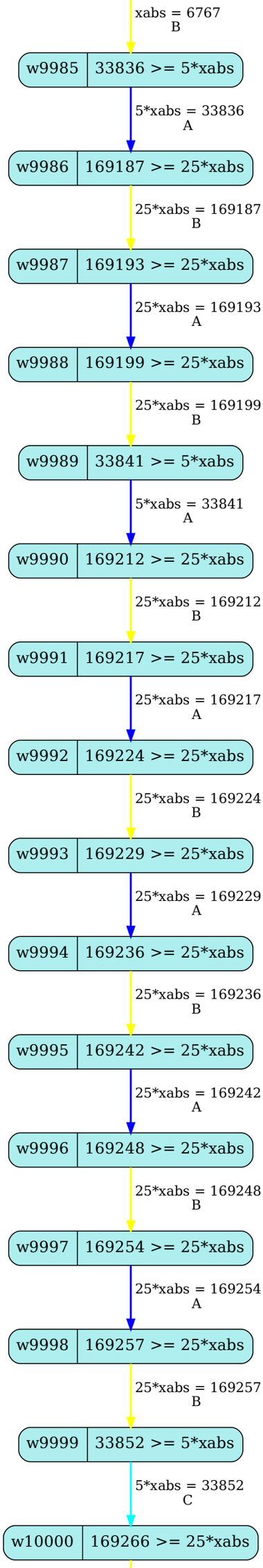
xabs = 6767
B
w9985
33836 >= 5*xabs
5*xabs = 33836
A
w9986
169187 >= 25*xabs
25*xabs = 169187
B
w9987
169193 >= 25*xabs
25*xabs = 169193
A
w9988
169199 >= 25*xabs
25*xabs = 169199
B
w9989
33841 >= 5*xabs
5*xabs = 33841
A
w9990
169212 >= 25*xabs
25*xabs = 169212
B
w9991
169217 >= 25*xabs
25*xabs = 169217
A
w9992
169224 >= 25*xabs
25*xabs = 169224
B
w9993
169229 >= 25*xabs
25*xabs = 169229
A
w9994
169236 >= 25*xabs
25*xabs = 169236
B
w9995
169242 >= 25*xabs
25*xabs = 169242
A
w9996
169248 >= 25*xabs
25*xabs = 169248
B
w9997
169254 >= 25*xabs
25*xabs = 169254
A
w9998
169257 >= 25*xabs
25*xabs = 169257
B
w9999
33852 >= 5*xabs
5*xabs = 33852
C
w10000
169266 >= 25*xabs

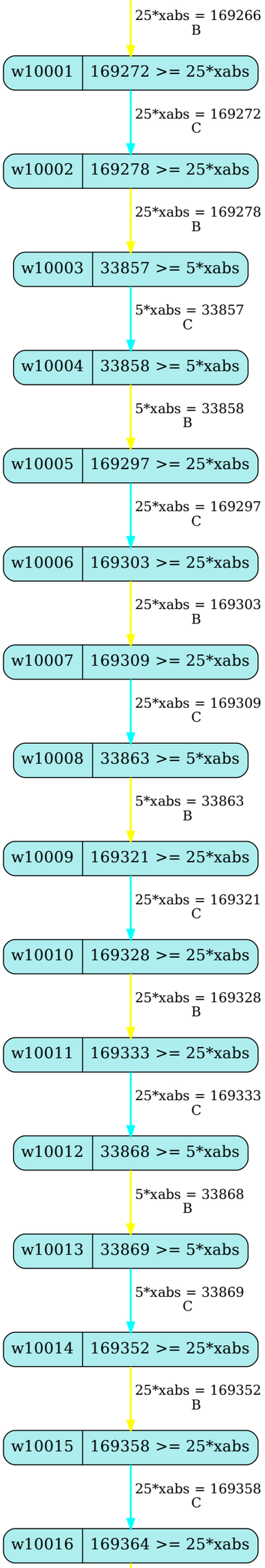
25*xabs = 169266
B
w10001
169272 >= 25*xabs
25*xabs = 169272
C
w10002
169278 >= 25*xabs
25*xabs = 169278
B
w10003
33857 >= 5*xabs
5*xabs = 33857
C
w10004
33858 >= 5*xabs
5*xabs = 33858
B
w10005
169297 >= 25*xabs
25*xabs = 169297
C
w10006
169303 >= 25*xabs
25*xabs = 169303
B
w10007
169309 >= 25*xabs
25*xabs = 169309
C
w10008
33863 >= 5*xabs
5*xabs = 33863
B
w10009
169321 >= 25*xabs
25*xabs = 169321
C
w10010
169328 >= 25*xabs
25*xabs = 169328
B
w10011
169333 >= 25*xabs
25*xabs = 169333
C
w10012
33868 >= 5*xabs
5*xabs = 33868
B
w10013
33869 >= 5*xabs
5*xabs = 33869
C
w10014
169352 >= 25*xabs
25*xabs = 169352
B
w10015
169358 >= 25*xabs
25*xabs = 169358
C
w10016
169364 >= 25*xabs

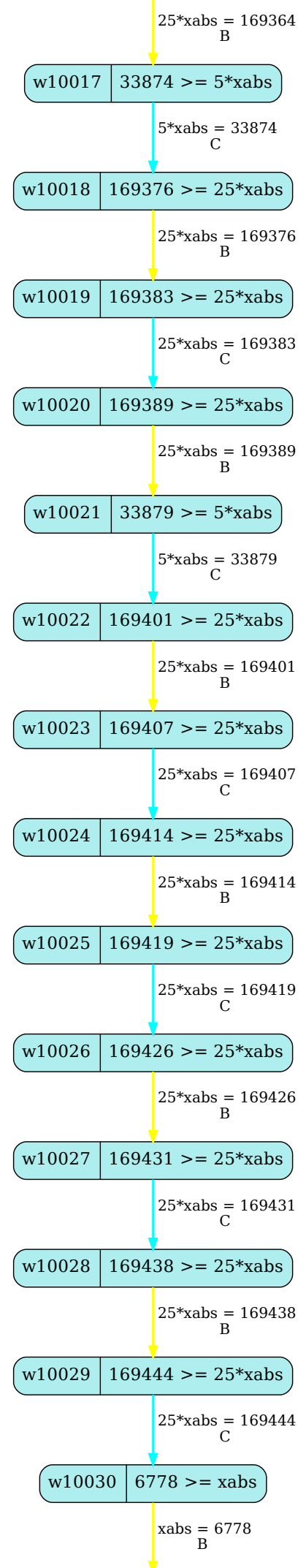
25*xabs = 169364
B
w10017
33874 >= 5*xabs
5*xabs = 33874
C
w10018
169376 >= 25*xabs
25*xabs = 169376
B
w10019
169383 >= 25*xabs
25*xabs = 169383
C
w10020
169389 >= 25*xabs
25*xabs = 169389
B
w10021
33879 >= 5*xabs
5*xabs = 33879
C
w10022
169401 >= 25*xabs
25*xabs = 169401
B
w10023
169407 >= 25*xabs
25*xabs = 169407
C
w10024
169414 >= 25*xabs
25*xabs = 169414
B
w10025
169419 >= 25*xabs
25*xabs = 169419
C
w10026
169426 >= 25*xabs
25*xabs = 169426
B
w10027
169431 >= 25*xabs
25*xabs = 169431
C
w10028
169438 >= 25*xabs
25*xabs = 169438
B
w10029
169444 >= 25*xabs
25*xabs = 169444
C
w10030
6778 >= xabs
xabs = 6778
B

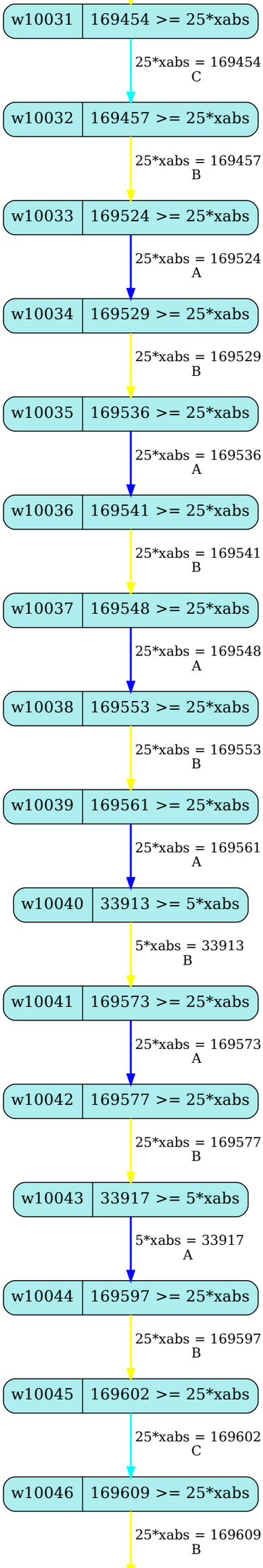
w10031
169454 >= 25*xabs
25*xabs = 169454
C
w10032
169457 >= 25*xabs
25*xabs = 169457
B
w10033
169524 >= 25*xabs
25*xabs = 169524
A
w10034
169529 >= 25*xabs
25*xabs = 169529
B
w10035
169536 >= 25*xabs
25*xabs = 169536
A
w10036
169541 >= 25*xabs
25*xabs = 169541
B
w10037
169548 >= 25*xabs
25*xabs = 169548
A
w10038
169553 >= 25*xabs
25*xabs = 169553
B
w10039
169561 >= 25*xabs
25*xabs = 169561
A
w10040
33913 >= 5*xabs
5*xabs = 33913
B
w10041
169573 >= 25*xabs
25*xabs = 169573
A
w10042
169577 >= 25*xabs
25*xabs = 169577
B
w10043
33917 >= 5*xabs
5*xabs = 33917
A
w10044
169597 >= 25*xabs
25*xabs = 169597
B
w10045
169602 >= 25*xabs
25*xabs = 169602
C
w10046
169609 >= 25*xabs
25*xabs = 169609
B

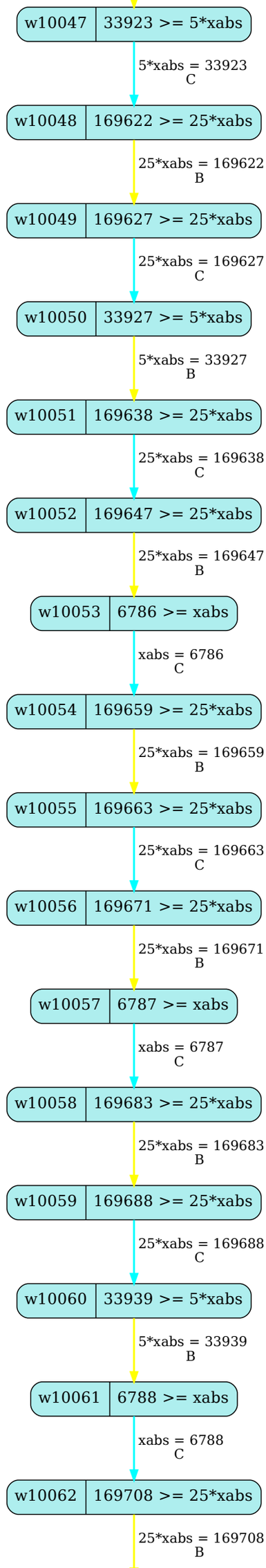
w10047
33923 >= 5*xabs
5*xabs = 33923
C
w10048
169622 >= 25*xabs
25*xabs = 169622
B
w10049
169627 >= 25*xabs
25*xabs = 169627
C
w10050
33927 >= 5*xabs
5*xabs = 33927
B
w10051
169638 >= 25*xabs
25*xabs = 169638
C
w10052
169647 >= 25*xabs
25*xabs = 169647
B
w10053
6786 >= xabs
xabs = 6786
C
w10054
169659 >= 25*xabs
25*xabs = 169659
B
w10055
169663 >= 25*xabs
25*xabs = 169663
C
w10056
169671 >= 25*xabs
25*xabs = 169671
B
w10057
6787 >= xabs
xabs = 6787
C
w10058
169683 >= 25*xabs
25*xabs = 169683
B
w10059
169688 >= 25*xabs
25*xabs = 169688
C
w10060
33939 >= 5*xabs
5*xabs = 33939
B
w10061
6788 >= xabs
xabs = 6788
C
w10062
169708 >= 25*xabs
25*xabs = 169708
B

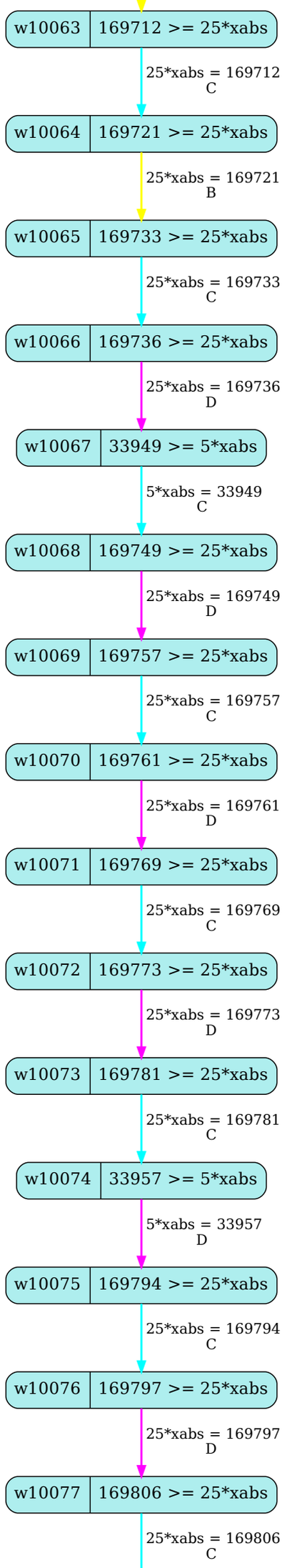
w10063
169712 >= 25*xabs
25*xabs = 169712
C
w10064
169721 >= 25*xabs
25*xabs = 169721
B
w10065
169733 >= 25*xabs
25*xabs = 169733
C
w10066
169736 >= 25*xabs
25*xabs = 169736
D
w10067
33949 >= 5*xabs
5*xabs = 33949
C
w10068
169749 >= 25*xabs
25*xabs = 169749
D
w10069
169757 >= 25*xabs
25*xabs = 169757
C
w10070
169761 >= 25*xabs
25*xabs = 169761
D
w10071
169769 >= 25*xabs
25*xabs = 169769
C
w10072
169773 >= 25*xabs
25*xabs = 169773
D
w10073
169781 >= 25*xabs
25*xabs = 169781
C
w10074
33957 >= 5*xabs
5*xabs = 33957
D
w10075
169794 >= 25*xabs
25*xabs = 169794
C
w10076
169797 >= 25*xabs
25*xabs = 169797
D
w10077
169806 >= 25*xabs
25*xabs = 169806
C

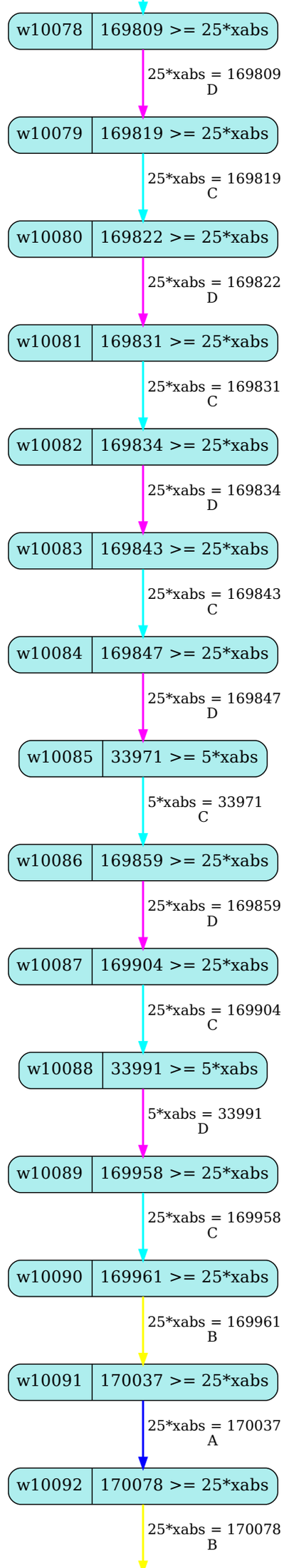
w10078
169809 >= 25*xabs
25*xabs = 169809
D
w10079
169819 >= 25*xabs
25*xabs = 169819
C
w10080
169822 >= 25*xabs
25*xabs = 169822
D
w10081
169831 >= 25*xabs
25*xabs = 169831
C
w10082
169834 >= 25*xabs
25*xabs = 169834
D
w10083
169843 >= 25*xabs
25*xabs = 169843
C
w10084
169847 >= 25*xabs
25*xabs = 169847
D
w10085
33971 >= 5*xabs
5*xabs = 33971
C
w10086
169859 >= 25*xabs
25*xabs = 169859
D
w10087
169904 >= 25*xabs
25*xabs = 169904
C
w10088
33991 >= 5*xabs
5*xabs = 33991
D
w10089
169958 >= 25*xabs
25*xabs = 169958
C
w10090
169961 >= 25*xabs
25*xabs = 169961
B
w10091
170037 >= 25*xabs
25*xabs = 170037
A
w10092
170078 >= 25*xabs
25*xabs = 170078
B

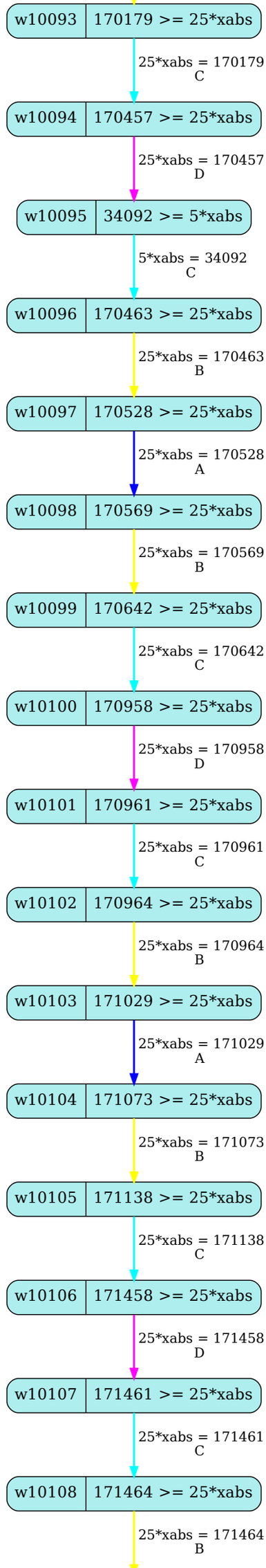
w10093
170179 >= 25*xabs
25*xabs = 170179
C
w10094
170457 >= 25*xabs
25*xabs = 170457
D
w10095
34092 >= 5*xabs
5*xabs = 34092
C
w10096
170463 >= 25*xabs
25*xabs = 170463
B
w10097
170528 >= 25*xabs
25*xabs = 170528
A
w10098
170569 >= 25*xabs
25*xabs = 170569
B
w10099
170642 >= 25*xabs
25*xabs = 170642
C
w10100
170958 >= 25*xabs
25*xabs = 170958
D
w10101
170961 >= 25*xabs
25*xabs = 170961
C
w10102
170964 >= 25*xabs
25*xabs = 170964
B
w10103
171029 >= 25*xabs
25*xabs = 171029
A
w10104
171073 >= 25*xabs
25*xabs = 171073
B
w10105
171138 >= 25*xabs
25*xabs = 171138
C
w10106
171458 >= 25*xabs
25*xabs = 171458
D
w10107
171461 >= 25*xabs
25*xabs = 171461
C
w10108
171464 >= 25*xabs
25*xabs = 171464
B

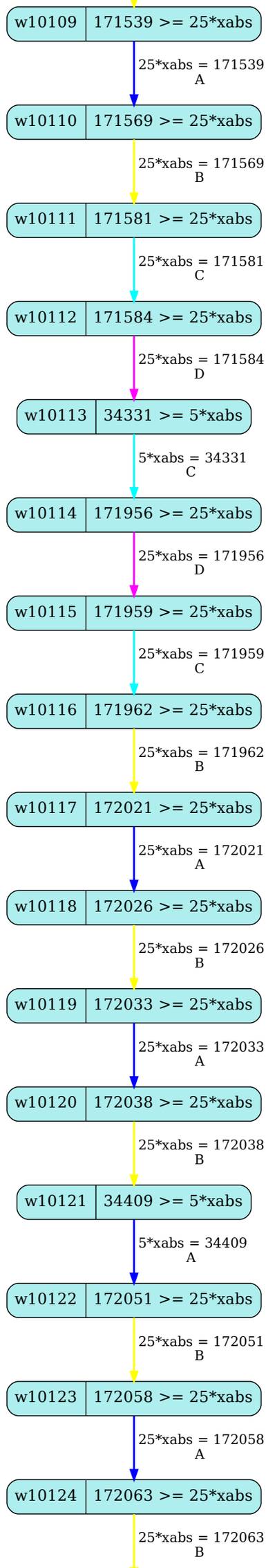
w10109
171539 >= 25*xabs
25*xabs = 171539
A
w10110
171569 >= 25*xabs
25*xabs = 171569
B
w10111
171581 >= 25*xabs
25*xabs = 171581
C
w10112
171584 >= 25*xabs
25*xabs = 171584
D
w10113
34331 >= 5*xabs
5*xabs = 34331
C
w10114
171956 >= 25*xabs
25*xabs = 171956
D
w10115
171959 >= 25*xabs
25*xabs = 171959
C
w10116
171962 >= 25*xabs
25*xabs = 171962
B
w10117
172021 >= 25*xabs
25*xabs = 172021
A
w10118
172026 >= 25*xabs
25*xabs = 172026
B
w10119
172033 >= 25*xabs
25*xabs = 172033
A
w10120
172038 >= 25*xabs
25*xabs = 172038
B
w10121
34409 >= 5*xabs
5*xabs = 34409
A
w10122
172051 >= 25*xabs
25*xabs = 172051
B
w10123
172058 >= 25*xabs
25*xabs = 172058
A
w10124
172063 >= 25*xabs
25*xabs = 172063
B

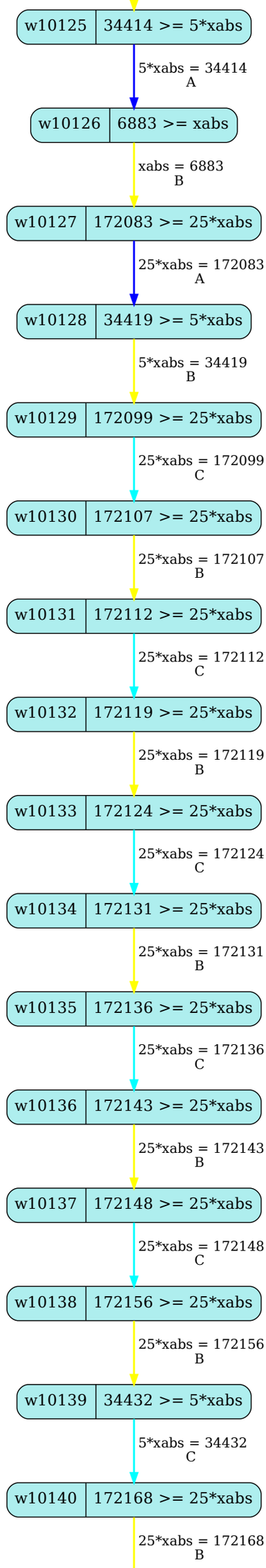
w10125
34414 >= 5*xabs
5*xabs = 34414
A
w10126
6883 >= xabs
xabs = 6883
B
w10127
172083 >= 25*xabs
25*xabs = 172083
A
w10128
34419 >= 5*xabs
5*xabs = 34419
B
w10129
172099 >= 25*xabs
25*xabs = 172099
C
w10130
172107 >= 25*xabs
25*xabs = 172107
B
w10131
172112 >= 25*xabs
25*xabs = 172112
C
w10132
172119 >= 25*xabs
25*xabs = 172119
B
w10133
172124 >= 25*xabs
25*xabs = 172124
C
w10134
172131 >= 25*xabs
25*xabs = 172131
B
w10135
172136 >= 25*xabs
25*xabs = 172136
C
w10136
172143 >= 25*xabs
25*xabs = 172143
B
w10137
172148 >= 25*xabs
25*xabs = 172148
C
w10138
172156 >= 25*xabs
25*xabs = 172156
B
w10139
34432 >= 5*xabs
5*xabs = 34432
C
w10140
172168 >= 25*xabs
25*xabs = 172168
B

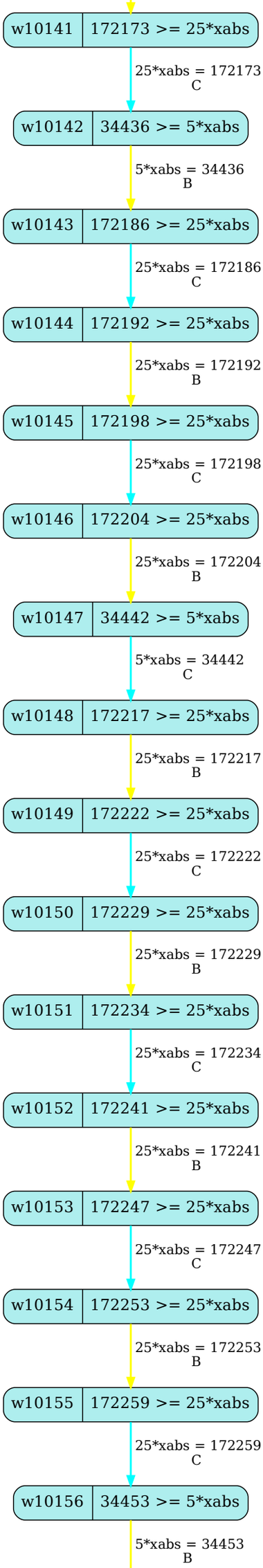
w10141
172173 >= 25*xabs
25*xabs = 172173
C
w10142
34436 >= 5*xabs
5*xabs = 34436
B
w10143
172186 >= 25*xabs
25*xabs = 172186
C
w10144
172192 >= 25*xabs
25*xabs = 172192
B
w10145
172198 >= 25*xabs
25*xabs = 172198
C
w10146
172204 >= 25*xabs
25*xabs = 172204
B
w10147
34442 >= 5*xabs
5*xabs = 34442
C
w10148
172217 >= 25*xabs
25*xabs = 172217
B
w10149
172222 >= 25*xabs
25*xabs = 172222
C
w10150
172229 >= 25*xabs
25*xabs = 172229
B
w10151
172234 >= 25*xabs
25*xabs = 172234
C
w10152
172241 >= 25*xabs
25*xabs = 172241
B
w10153
172247 >= 25*xabs
25*xabs = 172247
C
w10154
172253 >= 25*xabs
25*xabs = 172253
B
w10155
172259 >= 25*xabs
25*xabs = 172259
C
w10156
34453 >= 5*xabs
5*xabs = 34453
B

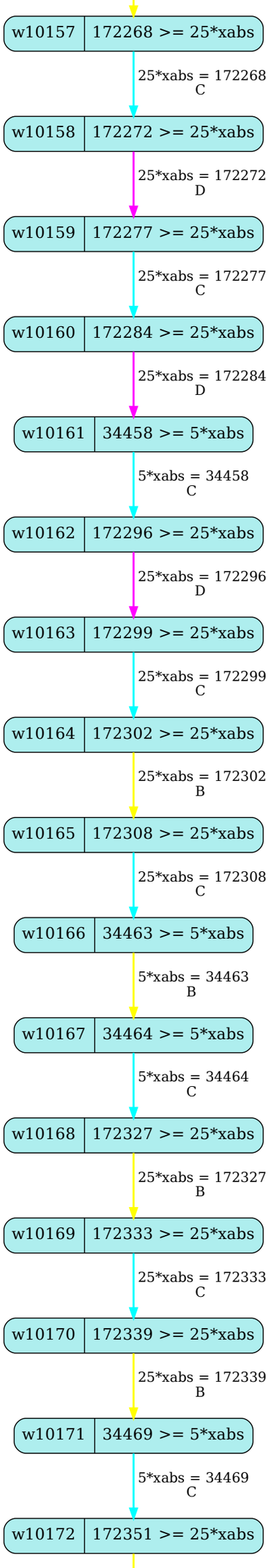
w10157
172268 >= 25*xabs
25*xabs = 172268
C
w10158
172272 >= 25*xabs
25*xabs = 172272
D
w10159
172277 >= 25*xabs
25*xabs = 172277
C
w10160
172284 >= 25*xabs
25*xabs = 172284
D
w10161
34458 >= 5*xabs
5*xabs = 34458
C
w10162
172296 >= 25*xabs
25*xabs = 172296
D
w10163
172299 >= 25*xabs
25*xabs = 172299
C
w10164
172302 >= 25*xabs
25*xabs = 172302
B
w10165
172308 >= 25*xabs
25*xabs = 172308
C
w10166
34463 >= 5*xabs
5*xabs = 34463
B
w10167
34464 >= 5*xabs
5*xabs = 34464
C
w10168
172327 >= 25*xabs
25*xabs = 172327
B
w10169
172333 >= 25*xabs
25*xabs = 172333
C
w10170
172339 >= 25*xabs
25*xabs = 172339
B
w10171
34469 >= 5*xabs
5*xabs = 34469
C
w10172
172351 >= 25*xabs

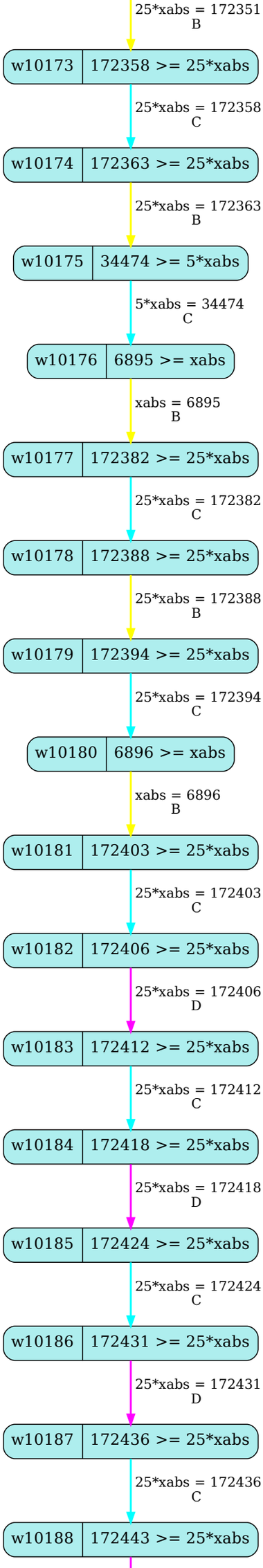
25*xabs = 172351
B
w10173
172358 >= 25*xabs
25*xabs = 172358
C
w10174
172363 >= 25*xabs
25*xabs = 172363
B
w10175
34474 >= 5*xabs
5*xabs = 34474
C
w10176
6895 >= xabs
xabs = 6895
B
w10177
172382 >= 25*xabs
25*xabs = 172382
C
w10178
172388 >= 25*xabs
25*xabs = 172388
B
w10179
172394 >= 25*xabs
25*xabs = 172394
C
w10180
6896 >= xabs
xabs = 6896
B
w10181
172403 >= 25*xabs
25*xabs = 172403
C
w10182
172406 >= 25*xabs
25*xabs = 172406
D
w10183
172412 >= 25*xabs
25*xabs = 172412
C
w10184
172418 >= 25*xabs
25*xabs = 172418
D
w10185
172424 >= 25*xabs
25*xabs = 172424
C
w10186
172431 >= 25*xabs
25*xabs = 172431
D
w10187
172436 >= 25*xabs
25*xabs = 172436
C
w10188
172443 >= 25*xabs

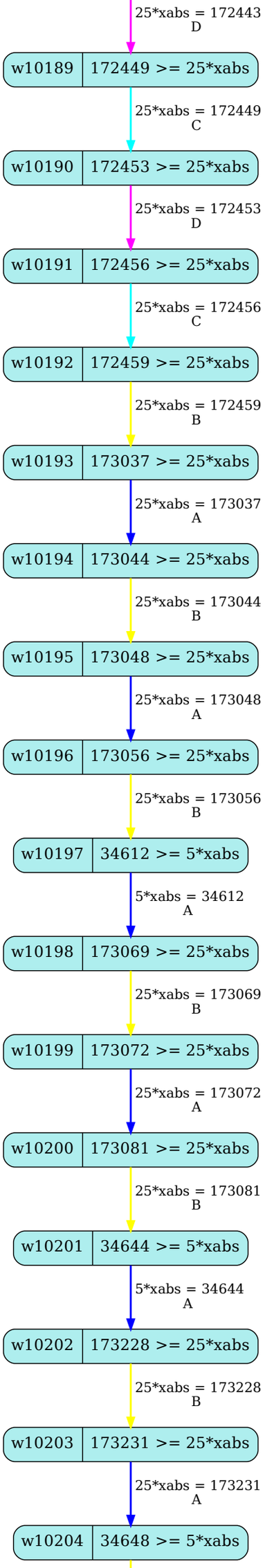
25*xabs = 172443
D
w10189
172449 >= 25*xabs
25*xabs = 172449
C
w10190
172453 >= 25*xabs
25*xabs = 172453
D
w10191
172456 >= 25*xabs
25*xabs = 172456
C
w10192
172459 >= 25*xabs
25*xabs = 172459
B
w10193
173037 >= 25*xabs
25*xabs = 173037
A
w10194
173044 >= 25*xabs
25*xabs = 173044
B
w10195
173048 >= 25*xabs
25*xabs = 173048
A
w10196
173056 >= 25*xabs
25*xabs = 173056
B
w10197
34612 >= 5*xabs
5*xabs = 34612
A
w10198
173069 >= 25*xabs
25*xabs = 173069
B
w10199
173072 >= 25*xabs
25*xabs = 173072
A
w10200
173081 >= 25*xabs
25*xabs = 173081
B
w10201
34644 >= 5*xabs
5*xabs = 34644
A
w10202
173228 >= 25*xabs
25*xabs = 173228
B
w10203
173231 >= 25*xabs
25*xabs = 173231
A
w10204
34648 >= 5*xabs

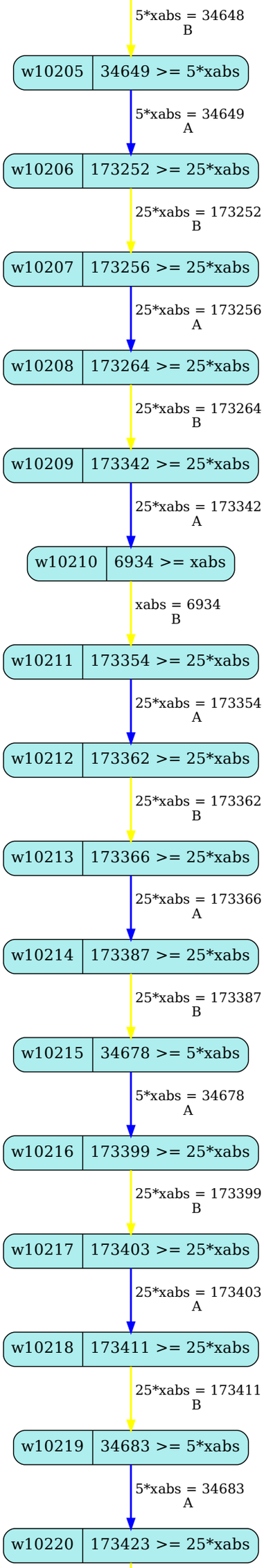
5*xabs = 34648
B
w10205
34649 >= 5*xabs
5*xabs = 34649
A
w10206
173252 >= 25*xabs
25*xabs = 173252
B
w10207
173256 >= 25*xabs
25*xabs = 173256
A
w10208
173264 >= 25*xabs
25*xabs = 173264
B
w10209
173342 >= 25*xabs
25*xabs = 173342
A
w10210
6934 >= xabs
xabs = 6934
B
w10211
173354 >= 25*xabs
25*xabs = 173354
A
w10212
173362 >= 25*xabs
25*xabs = 173362
B
w10213
173366 >= 25*xabs
25*xabs = 173366
A
w10214
173387 >= 25*xabs
25*xabs = 173387
B
w10215
34678 >= 5*xabs
5*xabs = 34678
A
w10216
173399 >= 25*xabs
25*xabs = 173399
B
w10217
173403 >= 25*xabs
25*xabs = 173403
A
w10218
173411 >= 25*xabs
25*xabs = 173411
B
w10219
34683 >= 5*xabs
5*xabs = 34683
A
w10220
173423 >= 25*xabs

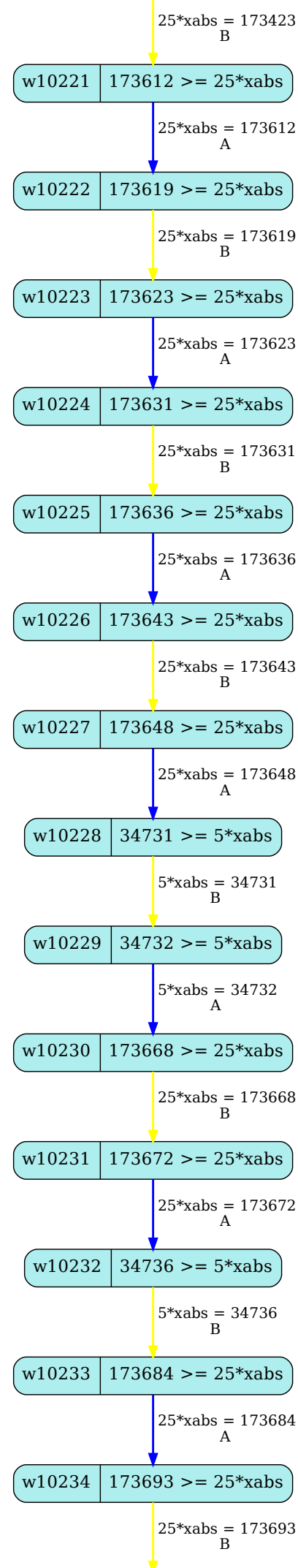
25*xabs = 173423
B
w10221
173612 >= 25*xabs
25*xabs = 173612
A
w10222
173619 >= 25*xabs
25*xabs = 173619
B
w10223
173623 >= 25*xabs
25*xabs = 173623
A
w10224
173631 >= 25*xabs
25*xabs = 173631
B
w10225
173636 >= 25*xabs
25*xabs = 173636
A
w10226
173643 >= 25*xabs
25*xabs = 173643
B
w10227
173648 >= 25*xabs
25*xabs = 173648
A
w10228
34731 >= 5*xabs
5*xabs = 34731
B
w10229
34732 >= 5*xabs
5*xabs = 34732
A
w10230
173668 >= 25*xabs
25*xabs = 173668
B
w10231
173672 >= 25*xabs
25*xabs = 173672
A
w10232
34736 >= 5*xabs
5*xabs = 34736
B
w10233
173684 >= 25*xabs
25*xabs = 173684
A
w10234
173693 >= 25*xabs
25*xabs = 173693
B

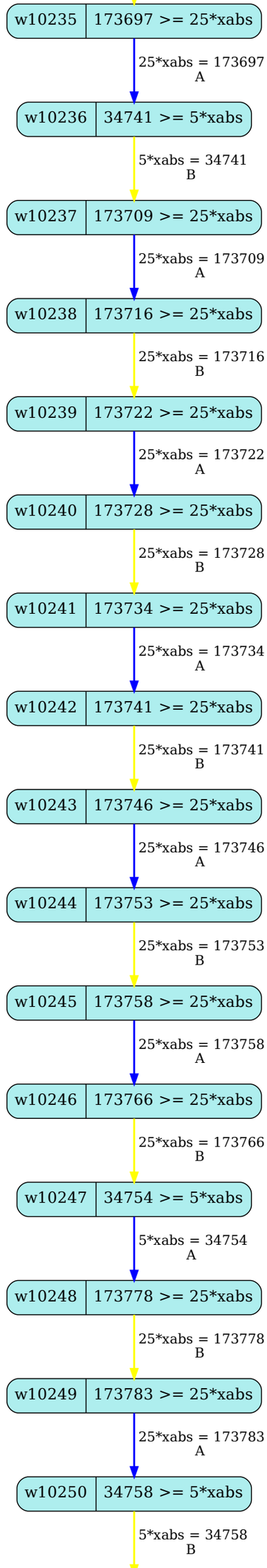
w10235
173697 >= 25*xabs
25*xabs = 173697
A
w10236
34741 >= 5*xabs
5*xabs = 34741
B
w10237
173709 >= 25*xabs
25*xabs = 173709
A
w10238
173716 >= 25*xabs
25*xabs = 173716
B
w10239
173722 >= 25*xabs
25*xabs = 173722
A
w10240
173728 >= 25*xabs
25*xabs = 173728
B
w10241
173734 >= 25*xabs
25*xabs = 173734
A
w10242
173741 >= 25*xabs
25*xabs = 173741
B
w10243
173746 >= 25*xabs
25*xabs = 173746
A
w10244
173753 >= 25*xabs
25*xabs = 173753
B
w10245
173758 >= 25*xabs
25*xabs = 173758
A
w10246
173766 >= 25*xabs
25*xabs = 173766
B
w10247
34754 >= 5*xabs
5*xabs = 34754
A
w10248
173778 >= 25*xabs
25*xabs = 173778
B
w10249
173783 >= 25*xabs
25*xabs = 173783
A
w10250
34758 >= 5*xabs
5*xabs = 34758
B

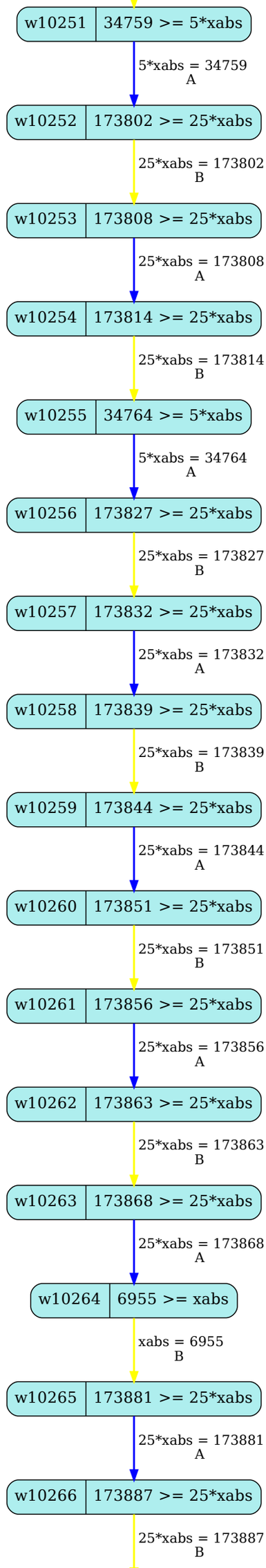
w10251
34759 >= 5*xabs
5*xabs = 34759
A
w10252
173802 >= 25*xabs
25*xabs = 173802
B
w10253
173808 >= 25*xabs
25*xabs = 173808
A
w10254
173814 >= 25*xabs
25*xabs = 173814
B
w10255
34764 >= 5*xabs
5*xabs = 34764
A
w10256
173827 >= 25*xabs
25*xabs = 173827
B
w10257
173832 >= 25*xabs
25*xabs = 173832
A
w10258
173839 >= 25*xabs
25*xabs = 173839
B
w10259
173844 >= 25*xabs
25*xabs = 173844
A
w10260
173851 >= 25*xabs
25*xabs = 173851
B
w10261
173856 >= 25*xabs
25*xabs = 173856
A
w10262
173863 >= 25*xabs
25*xabs = 173863
B
w10263
173868 >= 25*xabs
25*xabs = 173868
A
w10264
6955 >= xabs
xabs = 6955
B
w10265
173881 >= 25*xabs
25*xabs = 173881
A
w10266
173887 >= 25*xabs
25*xabs = 173887
B

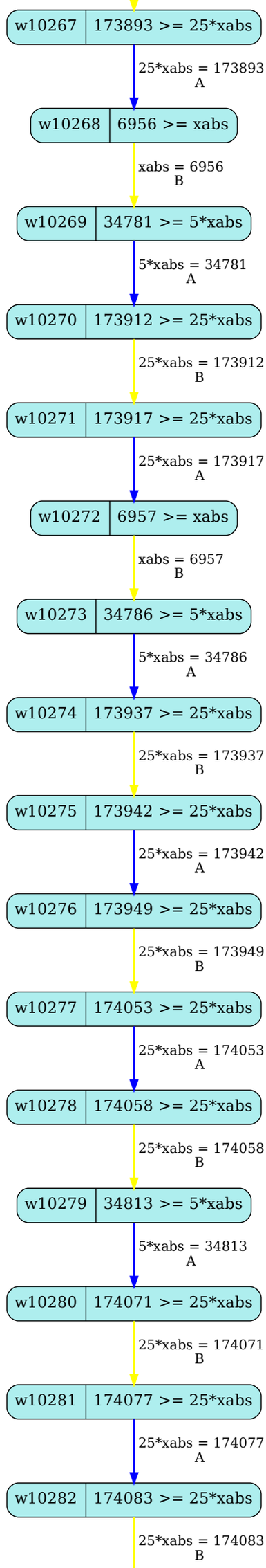
w10267
173893 >= 25*xabs
25*xabs = 173893
A
w10268
6956 >= xabs
xabs = 6956
B
w10269
34781 >= 5*xabs
5*xabs = 34781
A
w10270
173912 >= 25*xabs
25*xabs = 173912
B
w10271
173917 >= 25*xabs
25*xabs = 173917
A
w10272
6957 >= xabs
xabs = 6957
B
w10273
34786 >= 5*xabs
5*xabs = 34786
A
w10274
173937 >= 25*xabs
25*xabs = 173937
B
w10275
173942 >= 25*xabs
25*xabs = 173942
A
w10276
173949 >= 25*xabs
25*xabs = 173949
B
w10277
174053 >= 25*xabs
25*xabs = 174053
A
w10278
174058 >= 25*xabs
25*xabs = 174058
B
w10279
34813 >= 5*xabs
5*xabs = 34813
A
w10280
174071 >= 25*xabs
25*xabs = 174071
B
w10281
174077 >= 25*xabs
25*xabs = 174077
A
w10282
174083 >= 25*xabs
25*xabs = 174083
B

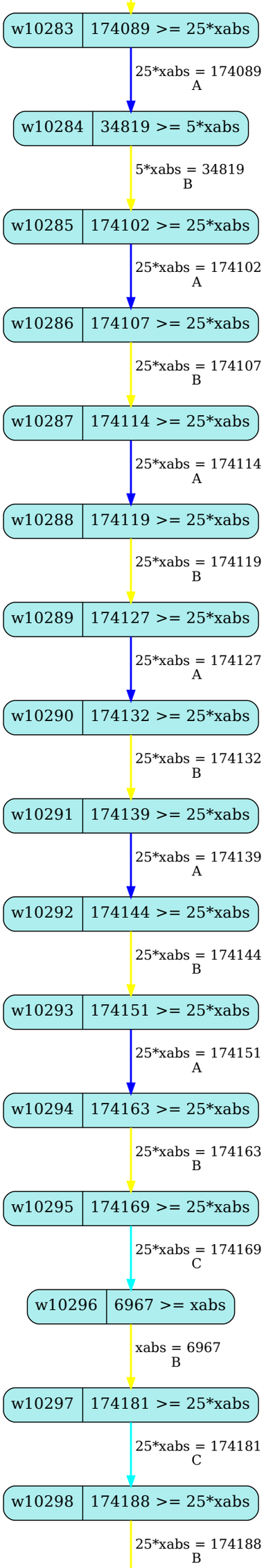
w10283
174089 >= 25*xabs
25*xabs = 174089
A
w10284
34819 >= 5*xabs
5*xabs = 34819
B
w10285
174102 >= 25*xabs
25*xabs = 174102
A
w10286
174107 >= 25*xabs
25*xabs = 174107
B
w10287
174114 >= 25*xabs
25*xabs = 174114
A
w10288
174119 >= 25*xabs
25*xabs = 174119
B
w10289
174127 >= 25*xabs
25*xabs = 174127
A
w10290
174132 >= 25*xabs
25*xabs = 174132
B
w10291
174139 >= 25*xabs
25*xabs = 174139
A
w10292
174144 >= 25*xabs
25*xabs = 174144
B
w10293
174151 >= 25*xabs
25*xabs = 174151
A
w10294
174163 >= 25*xabs
25*xabs = 174163
B
w10295
174169 >= 25*xabs
25*xabs = 174169
C
w10296
6967 >= xabs
xabs = 6967
B
w10297
174181 >= 25*xabs
25*xabs = 174181
C
w10298
174188 >= 25*xabs
25*xabs = 174188
B

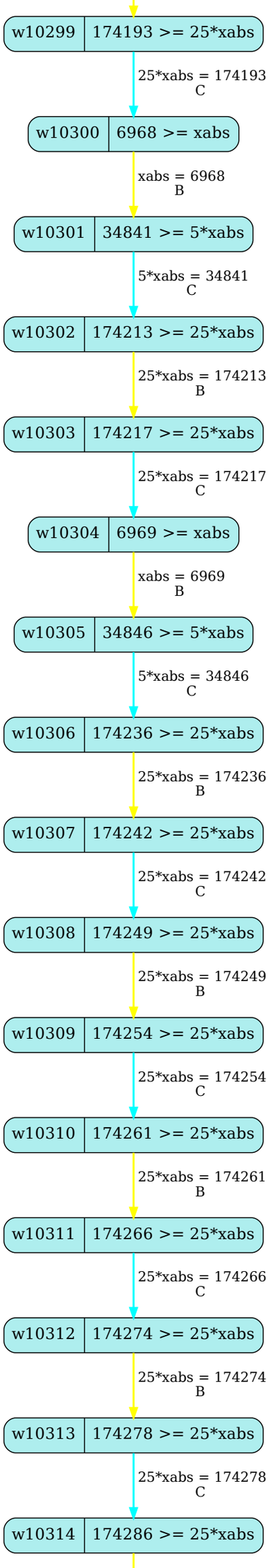
w10299
174193 >= 25*xabs
25*xabs = 174193
C
w10300
6968 >= xabs
xabs = 6968
B
w10301
34841 >= 5*xabs
5*xabs = 34841
C
w10302
174213 >= 25*xabs
25*xabs = 174213
B
w10303
174217 >= 25*xabs
25*xabs = 174217
C
w10304
6969 >= xabs
xabs = 6969
B
w10305
34846 >= 5*xabs
5*xabs = 34846
C
w10306
174236 >= 25*xabs
25*xabs = 174236
B
w10307
174242 >= 25*xabs
25*xabs = 174242
C
w10308
174249 >= 25*xabs
25*xabs = 174249
B
w10309
174254 >= 25*xabs
25*xabs = 174254
C
w10310
174261 >= 25*xabs
25*xabs = 174261
B
w10311
174266 >= 25*xabs
25*xabs = 174266
C
w10312
174274 >= 25*xabs
25*xabs = 174274
B
w10313
174278 >= 25*xabs
25*xabs = 174278
C
w10314
174286 >= 25*xabs

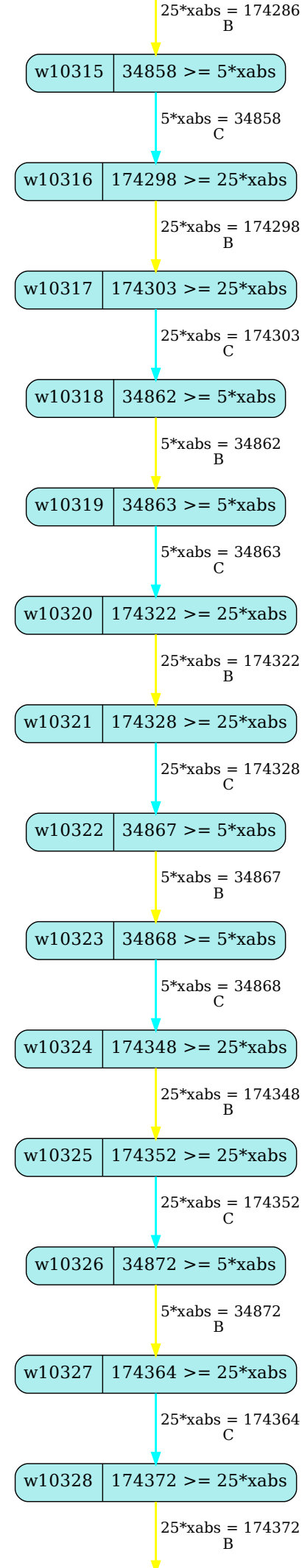
25*xabs = 174286
B
w10315
34858 >= 5*xabs
5*xabs = 34858
C
w10316
174298 >= 25*xabs
25*xabs = 174298
B
w10317
174303 >= 25*xabs
25*xabs = 174303
C
w10318
34862 >= 5*xabs
5*xabs = 34862
B
w10319
34863 >= 5*xabs
5*xabs = 34863
C
w10320
174322 >= 25*xabs
25*xabs = 174322
B
w10321
174328 >= 25*xabs
25*xabs = 174328
C
w10322
34867 >= 5*xabs
5*xabs = 34867
B
w10323
34868 >= 5*xabs
5*xabs = 34868
C
w10324
174348 >= 25*xabs
25*xabs = 174348
B
w10325
174352 >= 25*xabs
25*xabs = 174352
C
w10326
34872 >= 5*xabs
5*xabs = 34872
B
w10327
174364 >= 25*xabs
25*xabs = 174364
C
w10328
174372 >= 25*xabs
25*xabs = 174372
B

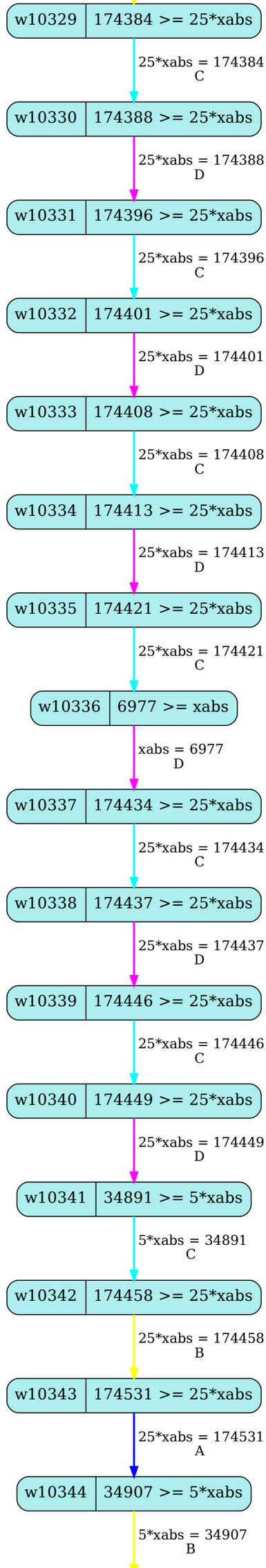
w10329
174384 >= 25*xabs
25*xabs = 174384
C
w10330
174388 >= 25*xabs
25*xabs = 174388
D
w10331
174396 >= 25*xabs
25*xabs = 174396
C
w10332
174401 >= 25*xabs
25*xabs = 174401
D
w10333
174408 >= 25*xabs
25*xabs = 174408
C
w10334
174413 >= 25*xabs
25*xabs = 174413
D
w10335
174421 >= 25*xabs
25*xabs = 174421
C
w10336
6977 >= xabs
xabs = 6977
D
w10337
174434 >= 25*xabs
25*xabs = 174434
C
w10338
174437 >= 25*xabs
25*xabs = 174437
D
w10339
174446 >= 25*xabs
25*xabs = 174446
C
w10340
174449 >= 25*xabs
25*xabs = 174449
D
w10341
34891 >= 5*xabs
5*xabs = 34891
C
w10342
174458 >= 25*xabs
25*xabs = 174458
B
w10343
174531 >= 25*xabs
25*xabs = 174531
A
w10344
34907 >= 5*xabs
5*xabs = 34907
B

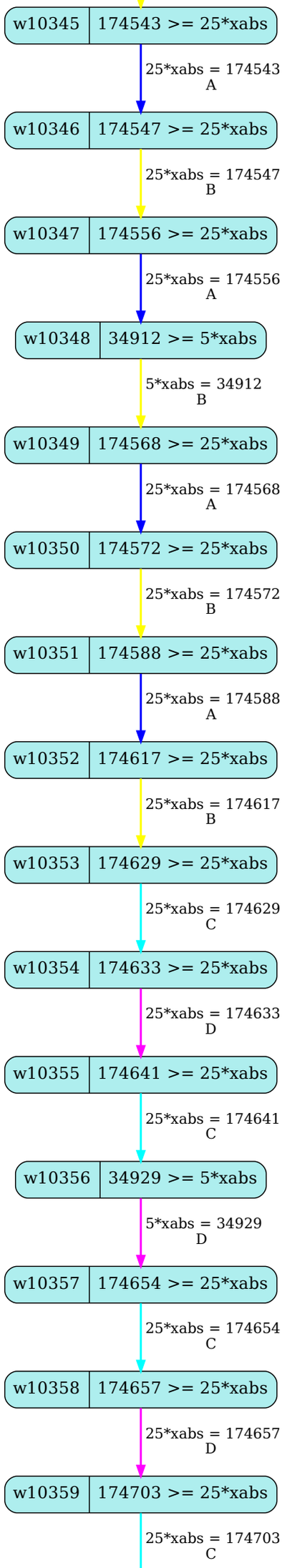
w10345
174543 >= 25*xabs
25*xabs = 174543
A
w10346
174547 >= 25*xabs
25*xabs = 174547
B
w10347
174556 >= 25*xabs
25*xabs = 174556
A
w10348
34912 >= 5*xabs
5*xabs = 34912
B
w10349
174568 >= 25*xabs
25*xabs = 174568
A
w10350
174572 >= 25*xabs
25*xabs = 174572
B
w10351
174588 >= 25*xabs
25*xabs = 174588
A
w10352
174617 >= 25*xabs
25*xabs = 174617
B
w10353
174629 >= 25*xabs
25*xabs = 174629
C
w10354
174633 >= 25*xabs
25*xabs = 174633
D
w10355
174641 >= 25*xabs
25*xabs = 174641
C
w10356
34929 >= 5*xabs
5*xabs = 34929
D
w10357
174654 >= 25*xabs
25*xabs = 174654
C
w10358
174657 >= 25*xabs
25*xabs = 174657
D
w10359
174703 >= 25*xabs
25*xabs = 174703
C

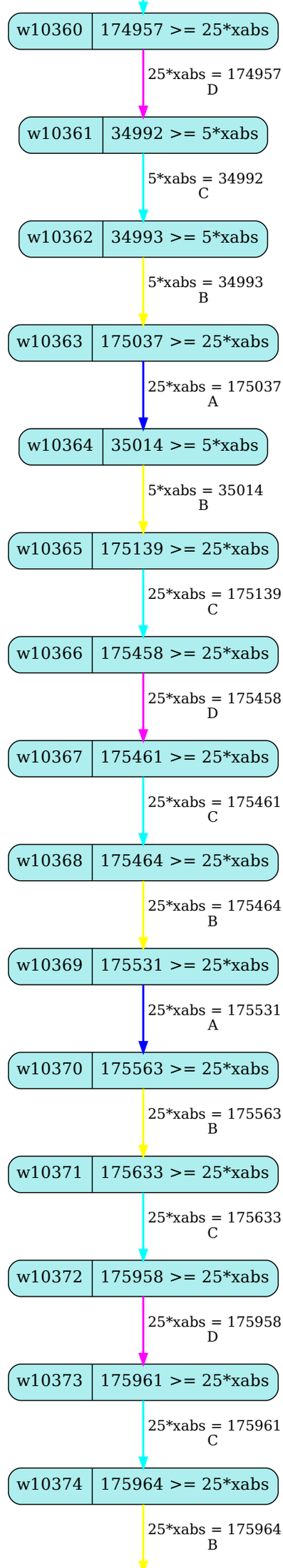
w10360
174957 >= 25*xabs
25*xabs = 174957
D
w10361
34992 >= 5*xabs
5*xabs = 34992
C
w10362
34993 >= 5*xabs
5*xabs = 34993
B
w10363
175037 >= 25*xabs
25*xabs = 175037
A
w10364
35014 >= 5*xabs
5*xabs = 35014
B
w10365
175139 >= 25*xabs
25*xabs = 175139
C
w10366
175458 >= 25*xabs
25*xabs = 175458
D
w10367
175461 >= 25*xabs
25*xabs = 175461
C
w10368
175464 >= 25*xabs
25*xabs = 175464
B
w10369
175531 >= 25*xabs
25*xabs = 175531
A
w10370
175563 >= 25*xabs
25*xabs = 175563
B
w10371
175633 >= 25*xabs
25*xabs = 175633
C
w10372
175958 >= 25*xabs
25*xabs = 175958
D
w10373
175961 >= 25*xabs
25*xabs = 175961
C
w10374
175964 >= 25*xabs
25*xabs = 175964
B

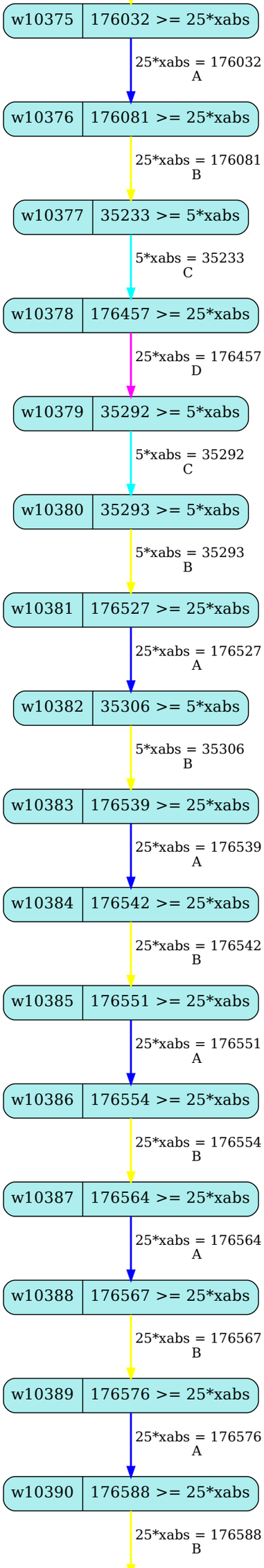
w10375
176032 >= 25*xabs
25*xabs = 176032
A
w10376
176081 >= 25*xabs
25*xabs = 176081
B
w10377
35233 >= 5*xabs
5*xabs = 35233
C
w10378
176457 >= 25*xabs
25*xabs = 176457
D
w10379
35292 >= 5*xabs
5*xabs = 35292
C
w10380
35293 >= 5*xabs
5*xabs = 35293
B
w10381
176527 >= 25*xabs
25*xabs = 176527
A
w10382
35306 >= 5*xabs
5*xabs = 35306
B
w10383
176539 >= 25*xabs
25*xabs = 176539
A
w10384
176542 >= 25*xabs
25*xabs = 176542
B
w10385
176551 >= 25*xabs
25*xabs = 176551
A
w10386
176554 >= 25*xabs
25*xabs = 176554
B
w10387
176564 >= 25*xabs
25*xabs = 176564
A
w10388
176567 >= 25*xabs
25*xabs = 176567
B
w10389
176576 >= 25*xabs
25*xabs = 176576
A
w10390
176588 >= 25*xabs
25*xabs = 176588
B

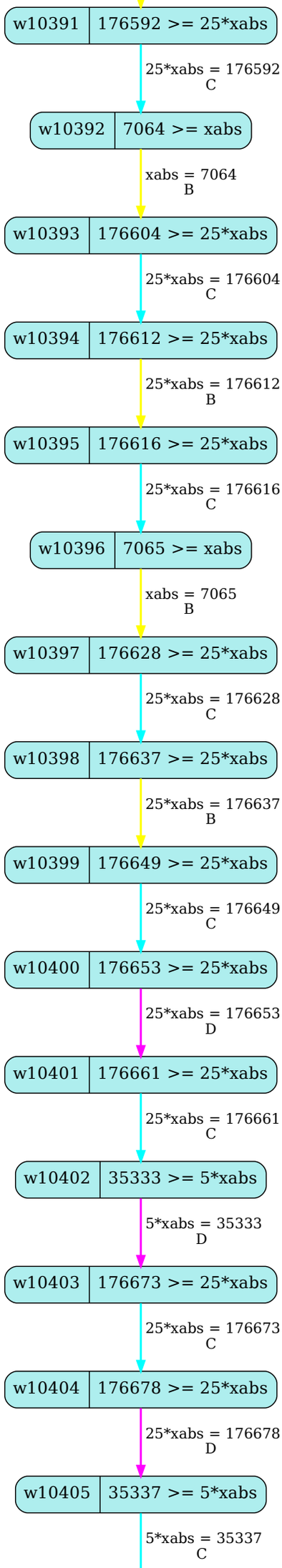
w10391
176592 >= 25*xabs
25*xabs = 176592
C
w10392
7064 >= xabs
xabs = 7064
B
w10393
176604 >= 25*xabs
25*xabs = 176604
C
w10394
176612 >= 25*xabs
25*xabs = 176612
B
w10395
176616 >= 25*xabs
25*xabs = 176616
C
w10396
7065 >= xabs
xabs = 7065
B
w10397
176628 >= 25*xabs
25*xabs = 176628
C
w10398
176637 >= 25*xabs
25*xabs = 176637
B
w10399
176649 >= 25*xabs
25*xabs = 176649
C
w10400
176653 >= 25*xabs
25*xabs = 176653
D
w10401
176661 >= 25*xabs
25*xabs = 176661
C
w10402
35333 >= 5*xabs
5*xabs = 35333
D
w10403
176673 >= 25*xabs
25*xabs = 176673
C
w10404
176678 >= 25*xabs
25*xabs = 176678
D
w10405
35337 >= 5*xabs
5*xabs = 35337
C

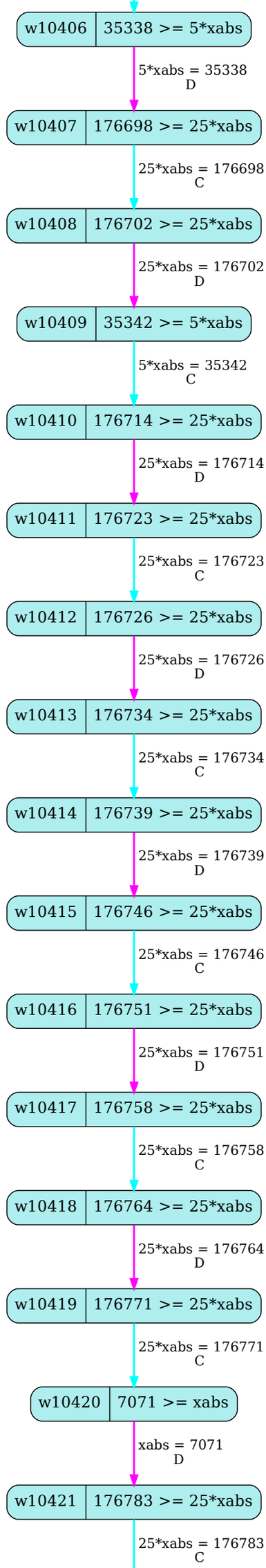
w10406
35338 >= 5*xabs
5*xabs = 35338
D
w10407
176698 >= 25*xabs
25*xabs = 176698
C
w10408
176702 >= 25*xabs
25*xabs = 176702
D
w10409
35342 >= 5*xabs
5*xabs = 35342
C
w10410
176714 >= 25*xabs
25*xabs = 176714
D
w10411
176723 >= 25*xabs
25*xabs = 176723
C
w10412
176726 >= 25*xabs
25*xabs = 176726
D
w10413
176734 >= 25*xabs
25*xabs = 176734
C
w10414
176739 >= 25*xabs
25*xabs = 176739
D
w10415
176746 >= 25*xabs
25*xabs = 176746
C
w10416
176751 >= 25*xabs
25*xabs = 176751
D
w10417
176758 >= 25*xabs
25*xabs = 176758
C
w10418
176764 >= 25*xabs
25*xabs = 176764
D
w10419
176771 >= 25*xabs
25*xabs = 176771
C
w10420
7071 >= xabs
xabs = 7071
D
w10421
176783 >= 25*xabs
25*xabs = 176783
C

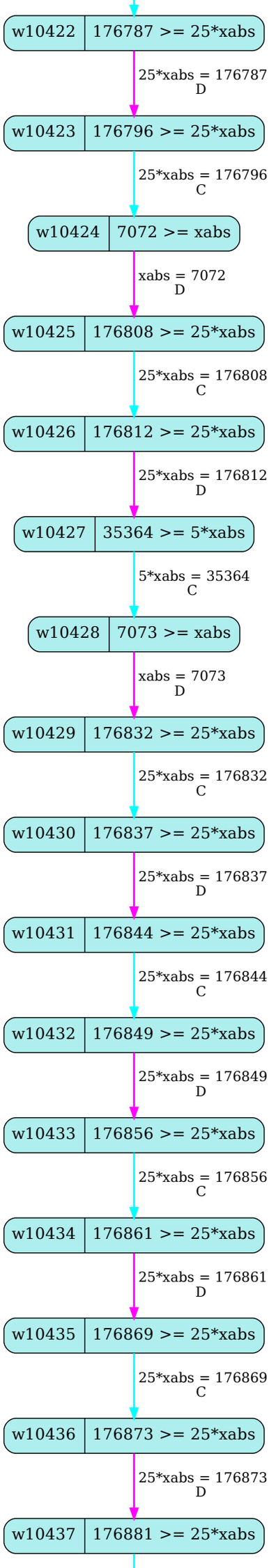
w10422
176787 >= 25*xabs
25*xabs = 176787
D
w10423
176796 >= 25*xabs
25*xabs = 176796
C
w10424
7072 >= xabs
xabs = 7072
D
w10425
176808 >= 25*xabs
25*xabs = 176808
C
w10426
176812 >= 25*xabs
25*xabs = 176812
D
w10427
35364 >= 5*xabs
5*xabs = 35364
C
w10428
7073 >= xabs
xabs = 7073
D
w10429
176832 >= 25*xabs
25*xabs = 176832
C
w10430
176837 >= 25*xabs
25*xabs = 176837
D
w10431
176844 >= 25*xabs
25*xabs = 176844
C
w10432
176849 >= 25*xabs
25*xabs = 176849
D
w10433
176856 >= 25*xabs
25*xabs = 176856
C
w10434
176861 >= 25*xabs
25*xabs = 176861
D
w10435
176869 >= 25*xabs
25*xabs = 176869
C
w10436
176873 >= 25*xabs
25*xabs = 176873
D
w10437
176881 >= 25*xabs

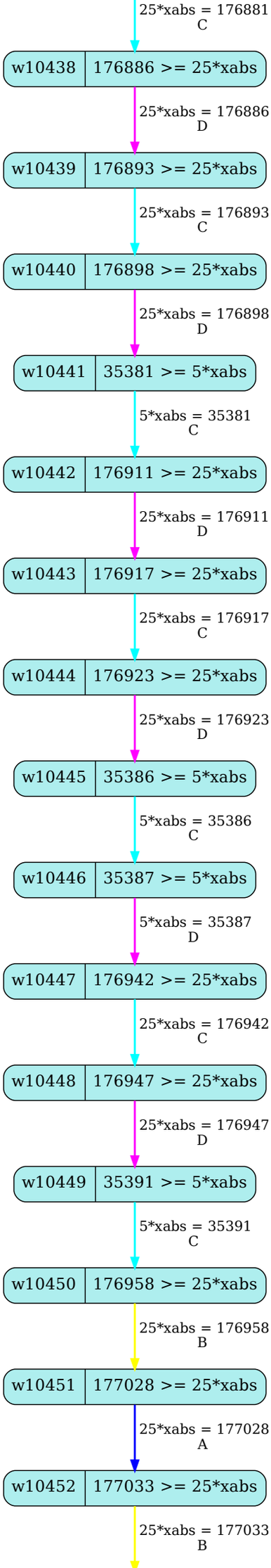
25*xabs = 176881
C
w10438
176886 >= 25*xabs
25*xabs = 176886
D
w10439
176893 >= 25*xabs
25*xabs = 176893
C
w10440
176898 >= 25*xabs
25*xabs = 176898
D
w10441
35381 >= 5*xabs
5*xabs = 35381
C
w10442
176911 >= 25*xabs
25*xabs = 176911
D
w10443
176917 >= 25*xabs
25*xabs = 176917
C
w10444
176923 >= 25*xabs
25*xabs = 176923
D
w10445
35386 >= 5*xabs
5*xabs = 35386
C
w10446
35387 >= 5*xabs
5*xabs = 35387
D
w10447
176942 >= 25*xabs
25*xabs = 176942
C
w10448
176947 >= 25*xabs
25*xabs = 176947
D
w10449
35391 >= 5*xabs
5*xabs = 35391
C
w10450
176958 >= 25*xabs
25*xabs = 176958
B
w10451
177028 >= 25*xabs
25*xabs = 177028
A
w10452
177033 >= 25*xabs
25*xabs = 177033
B

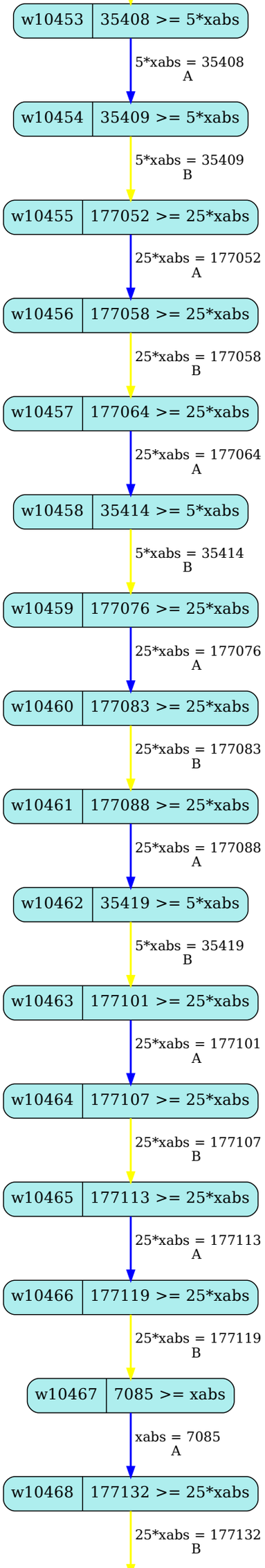
w10453
35408 >= 5*xabs
5*xabs = 35408
A
w10454
35409 >= 5*xabs
5*xabs = 35409
B
w10455
177052 >= 25*xabs
25*xabs = 177052
A
w10456
177058 >= 25*xabs
25*xabs = 177058
B
w10457
177064 >= 25*xabs
25*xabs = 177064
A
w10458
35414 >= 5*xabs
5*xabs = 35414
B
w10459
177076 >= 25*xabs
25*xabs = 177076
A
w10460
177083 >= 25*xabs
25*xabs = 177083
B
w10461
177088 >= 25*xabs
25*xabs = 177088
A
w10462
35419 >= 5*xabs
5*xabs = 35419
B
w10463
177101 >= 25*xabs
25*xabs = 177101
A
w10464
177107 >= 25*xabs
25*xabs = 177107
B
w10465
177113 >= 25*xabs
25*xabs = 177113
A
w10466
177119 >= 25*xabs
25*xabs = 177119
B
w10467
7085 >= xabs
xabs = 7085
A
w10468
177132 >= 25*xabs
25*xabs = 177132
B

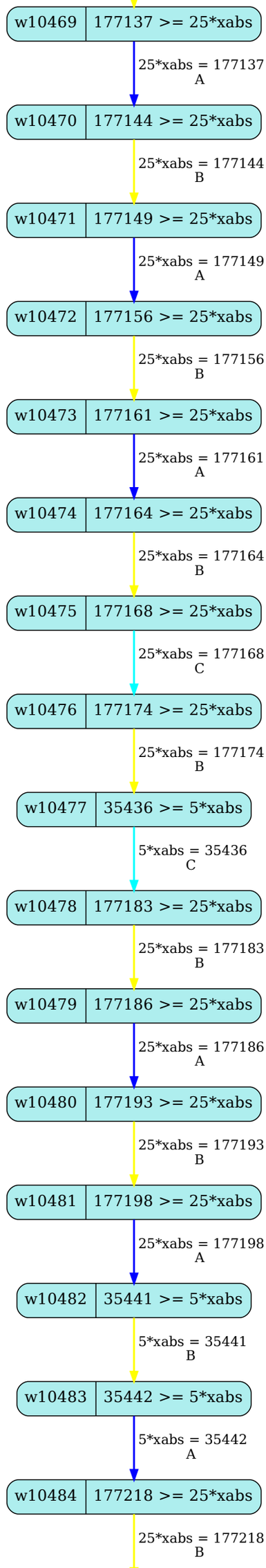
w10469
177137 >= 25*xabs
25*xabs = 177137
A
w10470
177144 >= 25*xabs
25*xabs = 177144
B
w10471
177149 >= 25*xabs
25*xabs = 177149
A
w10472
177156 >= 25*xabs
25*xabs = 177156
B
w10473
177161 >= 25*xabs
25*xabs = 177161
A
w10474
177164 >= 25*xabs
25*xabs = 177164
B
w10475
177168 >= 25*xabs
25*xabs = 177168
C
w10476
177174 >= 25*xabs
25*xabs = 177174
B
w10477
35436 >= 5*xabs
5*xabs = 35436
C
w10478
177183 >= 25*xabs
25*xabs = 177183
B
w10479
177186 >= 25*xabs
25*xabs = 177186
A
w10480
177193 >= 25*xabs
25*xabs = 177193
B
w10481
177198 >= 25*xabs
25*xabs = 177198
A
w10482
35441 >= 5*xabs
5*xabs = 35441
B
w10483
35442 >= 5*xabs
5*xabs = 35442
A
w10484
177218 >= 25*xabs
25*xabs = 177218
B

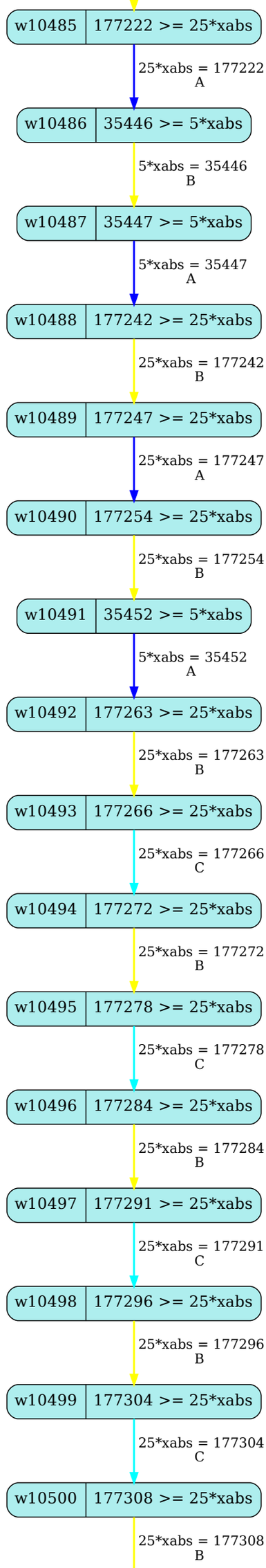
w10485
177222 >= 25*xabs
25*xabs = 177222
A
w10486
35446 >= 5*xabs
5*xabs = 35446
B
w10487
35447 >= 5*xabs
5*xabs = 35447
A
w10488
177242 >= 25*xabs
25*xabs = 177242
B
w10489
177247 >= 25*xabs
25*xabs = 177247
A
w10490
177254 >= 25*xabs
25*xabs = 177254
B
w10491
35452 >= 5*xabs
5*xabs = 35452
A
w10492
177263 >= 25*xabs
25*xabs = 177263
B
w10493
177266 >= 25*xabs
25*xabs = 177266
C
w10494
177272 >= 25*xabs
25*xabs = 177272
B
w10495
177278 >= 25*xabs
25*xabs = 177278
C
w10496
177284 >= 25*xabs
25*xabs = 177284
B
w10497
177291 >= 25*xabs
25*xabs = 177291
C
w10498
177296 >= 25*xabs
25*xabs = 177296
B
w10499
177304 >= 25*xabs
25*xabs = 177304
C
w10500
177308 >= 25*xabs
25*xabs = 177308
B

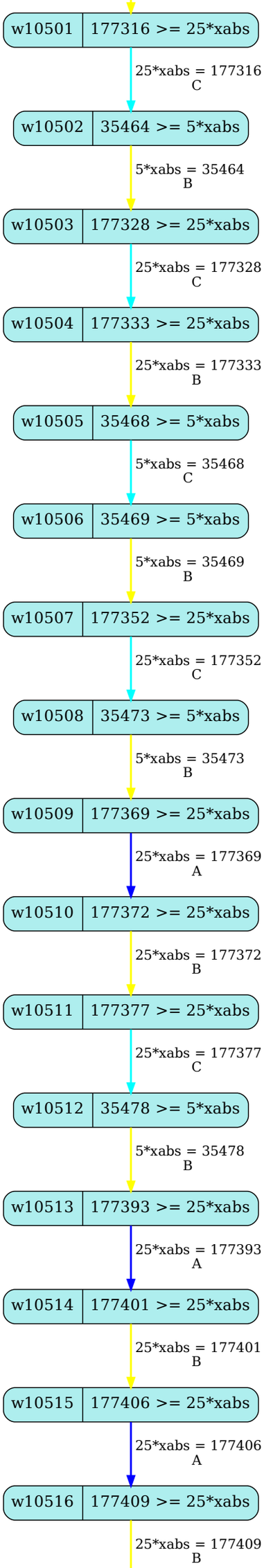
w10501
177316 >= 25*xabs
25*xabs = 177316
C
w10502
35464 >= 5*xabs
5*xabs = 35464
B
w10503
177328 >= 25*xabs
25*xabs = 177328
C
w10504
177333 >= 25*xabs
25*xabs = 177333
B
w10505
35468 >= 5*xabs
5*xabs = 35468
C
w10506
35469 >= 5*xabs
5*xabs = 35469
B
w10507
177352 >= 25*xabs
25*xabs = 177352
C
w10508
35473 >= 5*xabs
5*xabs = 35473
B
w10509
177369 >= 25*xabs
25*xabs = 177369
A
w10510
177372 >= 25*xabs
25*xabs = 177372
B
w10511
177377 >= 25*xabs
25*xabs = 177377
C
w10512
35478 >= 5*xabs
5*xabs = 35478
B
w10513
177393 >= 25*xabs
25*xabs = 177393
A
w10514
177401 >= 25*xabs
25*xabs = 177401
B
w10515
177406 >= 25*xabs
25*xabs = 177406
A
w10516
177409 >= 25*xabs
25*xabs = 177409
B

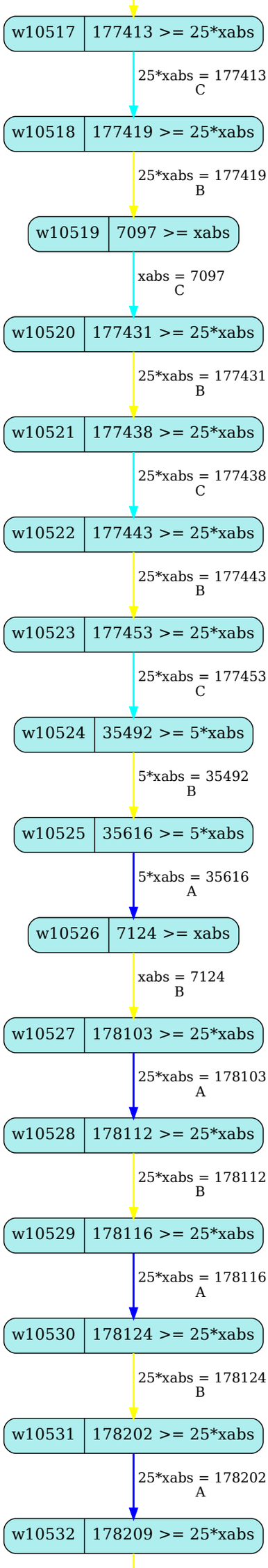
w10517
177413 >= 25*xabs
25*xabs = 177413
C
w10518
177419 >= 25*xabs
25*xabs = 177419
B
w10519
7097 >= xabs
xabs = 7097
C
w10520
177431 >= 25*xabs
25*xabs = 177431
B
w10521
177438 >= 25*xabs
25*xabs = 177438
C
w10522
177443 >= 25*xabs
25*xabs = 177443
B
w10523
177453 >= 25*xabs
25*xabs = 177453
C
w10524
35492 >= 5*xabs
5*xabs = 35492
B
w10525
35616 >= 5*xabs
5*xabs = 35616
A
w10526
7124 >= xabs
xabs = 7124
B
w10527
178103 >= 25*xabs
25*xabs = 178103
A
w10528
178112 >= 25*xabs
25*xabs = 178112
B
w10529
178116 >= 25*xabs
25*xabs = 178116
A
w10530
178124 >= 25*xabs
25*xabs = 178124
B
w10531
178202 >= 25*xabs
25*xabs = 178202
A
w10532
178209 >= 25*xabs

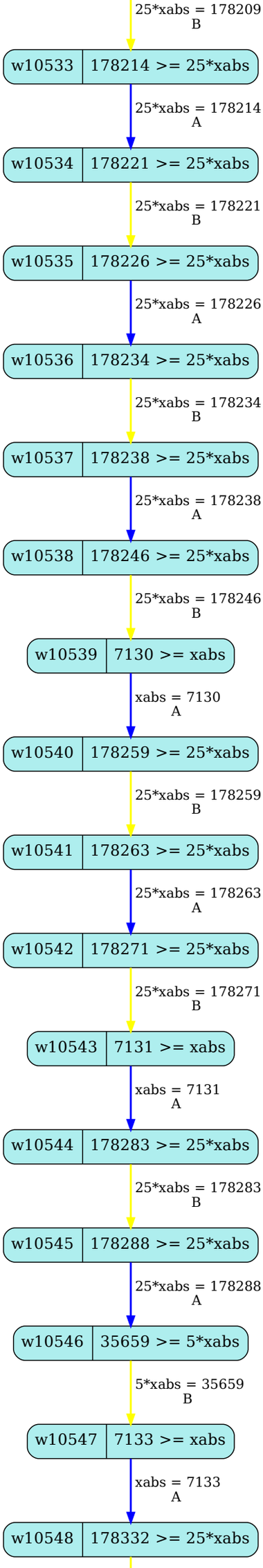
25*xabs = 178209
B
w10533
178214 >= 25*xabs
25*xabs = 178214
A
w10534
178221 >= 25*xabs
25*xabs = 178221
B
w10535
178226 >= 25*xabs
25*xabs = 178226
A
w10536
178234 >= 25*xabs
25*xabs = 178234
B
w10537
178238 >= 25*xabs
25*xabs = 178238
A
w10538
178246 >= 25*xabs
25*xabs = 178246
B
w10539
7130 >= xabs
xabs = 7130
A
w10540
178259 >= 25*xabs
25*xabs = 178259
B
w10541
178263 >= 25*xabs
25*xabs = 178263
A
w10542
178271 >= 25*xabs
25*xabs = 178271
B
w10543
7131 >= xabs
xabs = 7131
A
w10544
178283 >= 25*xabs
25*xabs = 178283
B
w10545
178288 >= 25*xabs
25*xabs = 178288
A
w10546
35659 >= 5*xabs
5*xabs = 35659
B
w10547
7133 >= xabs
xabs = 7133
A
w10548
178332 >= 25*xabs

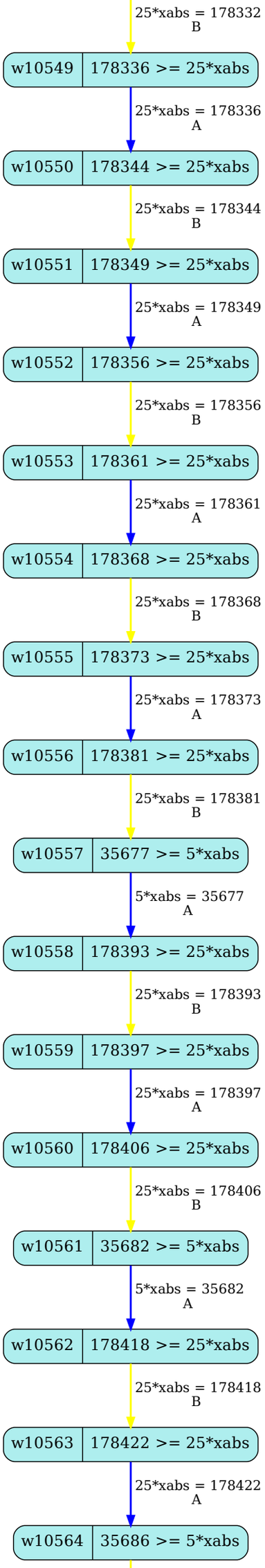
25*xabs = 178332
B
w10549
178336 >= 25*xabs
25*xabs = 178336
A
w10550
178344 >= 25*xabs
25*xabs = 178344
B
w10551
178349 >= 25*xabs
25*xabs = 178349
A
w10552
178356 >= 25*xabs
25*xabs = 178356
B
w10553
178361 >= 25*xabs
25*xabs = 178361
A
w10554
178368 >= 25*xabs
25*xabs = 178368
B
w10555
178373 >= 25*xabs
25*xabs = 178373
A
w10556
178381 >= 25*xabs
25*xabs = 178381
B
w10557
35677 >= 5*xabs
5*xabs = 35677
A
w10558
178393 >= 25*xabs
25*xabs = 178393
B
w10559
178397 >= 25*xabs
25*xabs = 178397
A
w10560
178406 >= 25*xabs
25*xabs = 178406
B
w10561
35682 >= 5*xabs
5*xabs = 35682
A
w10562
178418 >= 25*xabs
25*xabs = 178418
B
w10563
178422 >= 25*xabs
25*xabs = 178422
A
w10564
35686 >= 5*xabs

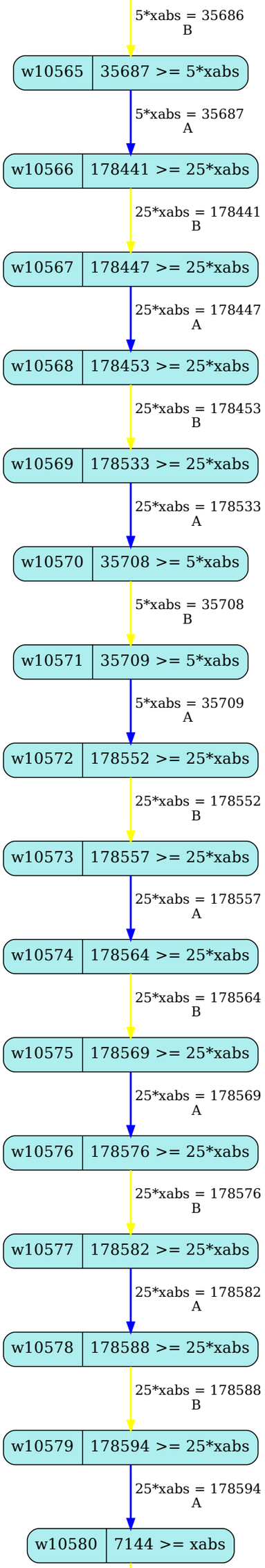
5*xabs = 35686
B
w10565
35687 >= 5*xabs
5*xabs = 35687
A
w10566
178441 >= 25*xabs
25*xabs = 178441
B
w10567
178447 >= 25*xabs
25*xabs = 178447
A
w10568
178453 >= 25*xabs
25*xabs = 178453
B
w10569
178533 >= 25*xabs
25*xabs = 178533
A
w10570
35708 >= 5*xabs
5*xabs = 35708
B
w10571
35709 >= 5*xabs
5*xabs = 35709
A
w10572
178552 >= 25*xabs
25*xabs = 178552
B
w10573
178557 >= 25*xabs
25*xabs = 178557
A
w10574
178564 >= 25*xabs
25*xabs = 178564
B
w10575
178569 >= 25*xabs
25*xabs = 178569
A
w10576
178576 >= 25*xabs
25*xabs = 178576
B
w10577
178582 >= 25*xabs
25*xabs = 178582
A
w10578
178588 >= 25*xabs
25*xabs = 178588
B
w10579
178594 >= 25*xabs
25*xabs = 178594
A
w10580
7144 >= xabs

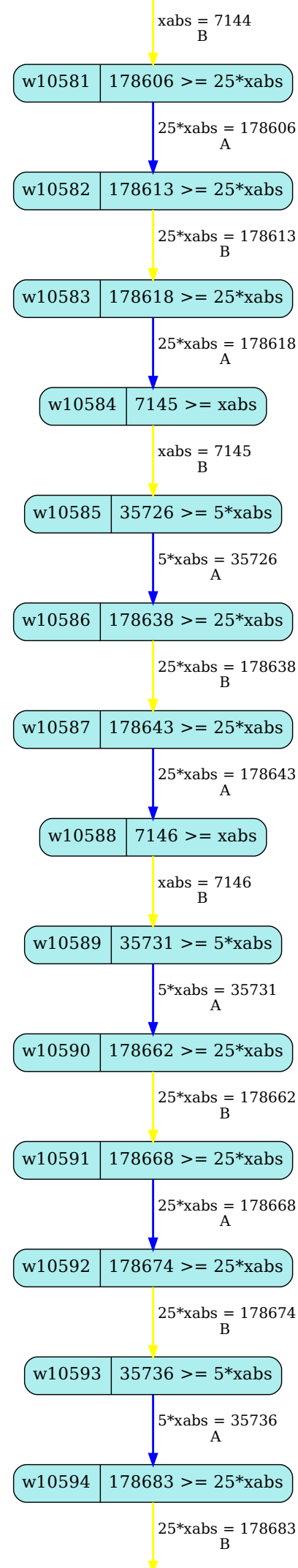
xabs = 7144
B
w10581
178606 >= 25*xabs
25*xabs = 178606
A
w10582
178613 >= 25*xabs
25*xabs = 178613
B
w10583
178618 >= 25*xabs
25*xabs = 178618
A
w10584
7145 >= xabs
xabs = 7145
B
w10585
35726 >= 5*xabs
5*xabs = 35726
A
w10586
178638 >= 25*xabs
25*xabs = 178638
B
w10587
178643 >= 25*xabs
25*xabs = 178643
A
w10588
7146 >= xabs
xabs = 7146
B
w10589
35731 >= 5*xabs
5*xabs = 35731
A
w10590
178662 >= 25*xabs
25*xabs = 178662
B
w10591
178668 >= 25*xabs
25*xabs = 178668
A
w10592
178674 >= 25*xabs
25*xabs = 178674
B
w10593
35736 >= 5*xabs
5*xabs = 35736
A
w10594
178683 >= 25*xabs
25*xabs = 178683
B

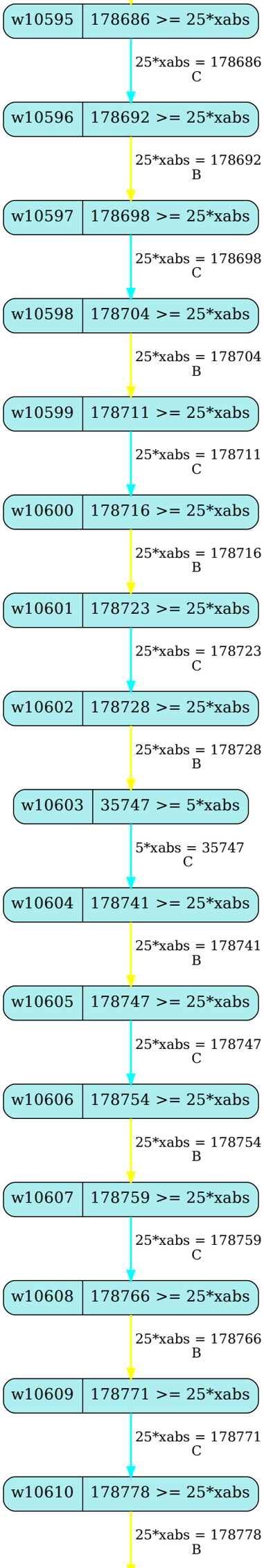
w10595
178686 >= 25*xabs
25*xabs = 178686
C
w10596
178692 >= 25*xabs
25*xabs = 178692
B
w10597
178698 >= 25*xabs
25*xabs = 178698
C
w10598
178704 >= 25*xabs
25*xabs = 178704
B
w10599
178711 >= 25*xabs
25*xabs = 178711
C
w10600
178716 >= 25*xabs
25*xabs = 178716
B
w10601
178723 >= 25*xabs
25*xabs = 178723
C
w10602
178728 >= 25*xabs
25*xabs = 178728
B
w10603
35747 >= 5*xabs
5*xabs = 35747
C
w10604
178741 >= 25*xabs
25*xabs = 178741
B
w10605
178747 >= 25*xabs
25*xabs = 178747
C
w10606
178754 >= 25*xabs
25*xabs = 178754
B
w10607
178759 >= 25*xabs
25*xabs = 178759
C
w10608
178766 >= 25*xabs
25*xabs = 178766
B
w10609
178771 >= 25*xabs
25*xabs = 178771
C
w10610
178778 >= 25*xabs
25*xabs = 178778
B

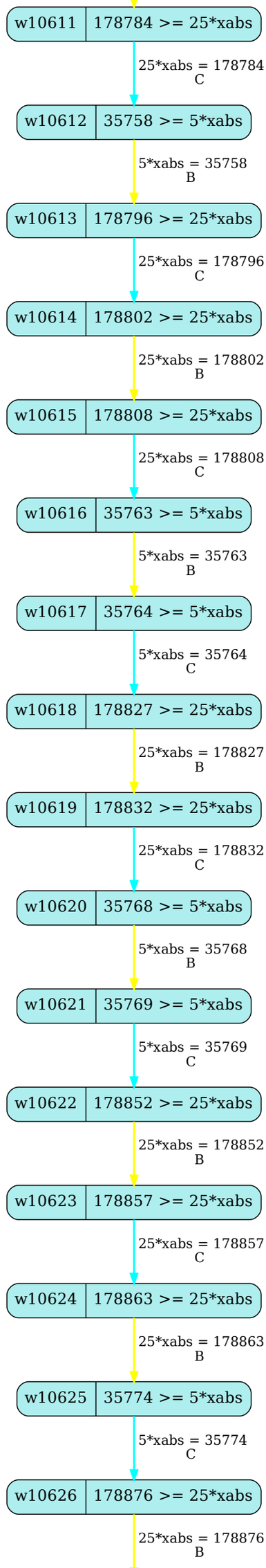
w10611
178784 >= 25*xabs
25*xabs = 178784
C
w10612
35758 >= 5*xabs
5*xabs = 35758
B
w10613
178796 >= 25*xabs
25*xabs = 178796
C
w10614
178802 >= 25*xabs
25*xabs = 178802
B
w10615
178808 >= 25*xabs
25*xabs = 178808
C
w10616
35763 >= 5*xabs
5*xabs = 35763
B
w10617
35764 >= 5*xabs
5*xabs = 35764
C
w10618
178827 >= 25*xabs
25*xabs = 178827
B
w10619
178832 >= 25*xabs
25*xabs = 178832
C
w10620
35768 >= 5*xabs
5*xabs = 35768
B
w10621
35769 >= 5*xabs
5*xabs = 35769
C
w10622
178852 >= 25*xabs
25*xabs = 178852
B
w10623
178857 >= 25*xabs
25*xabs = 178857
C
w10624
178863 >= 25*xabs
25*xabs = 178863
B
w10625
35774 >= 5*xabs
5*xabs = 35774
C
w10626
178876 >= 25*xabs
25*xabs = 178876
B

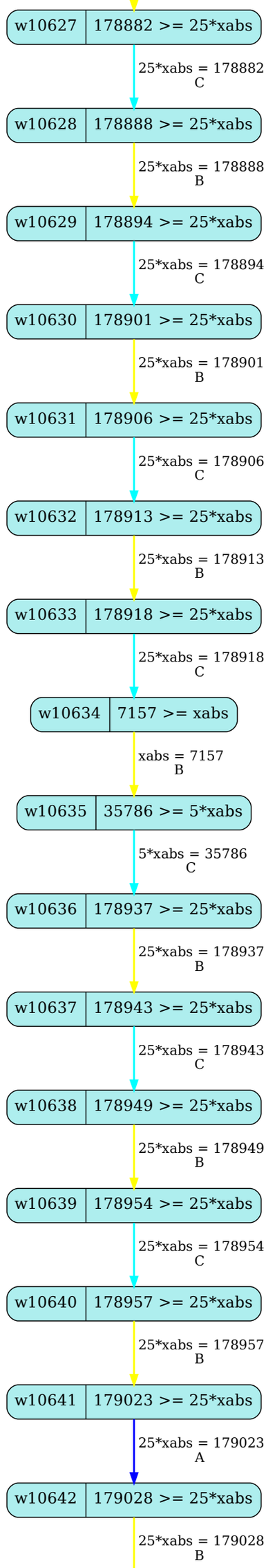
w10627
178882 >= 25*xabs
25*xabs = 178882
C
w10628
178888 >= 25*xabs
25*xabs = 178888
B
w10629
178894 >= 25*xabs
25*xabs = 178894
C
w10630
178901 >= 25*xabs
25*xabs = 178901
B
w10631
178906 >= 25*xabs
25*xabs = 178906
C
w10632
178913 >= 25*xabs
25*xabs = 178913
B
w10633
178918 >= 25*xabs
25*xabs = 178918
C
w10634
7157 >= xabs
xabs = 7157
B
w10635
35786 >= 5*xabs
5*xabs = 35786
C
w10636
178937 >= 25*xabs
25*xabs = 178937
B
w10637
178943 >= 25*xabs
25*xabs = 178943
C
w10638
178949 >= 25*xabs
25*xabs = 178949
B
w10639
178954 >= 25*xabs
25*xabs = 178954
C
w10640
178957 >= 25*xabs
25*xabs = 178957
B
w10641
179023 >= 25*xabs
25*xabs = 179023
A
w10642
179028 >= 25*xabs
25*xabs = 179028
B

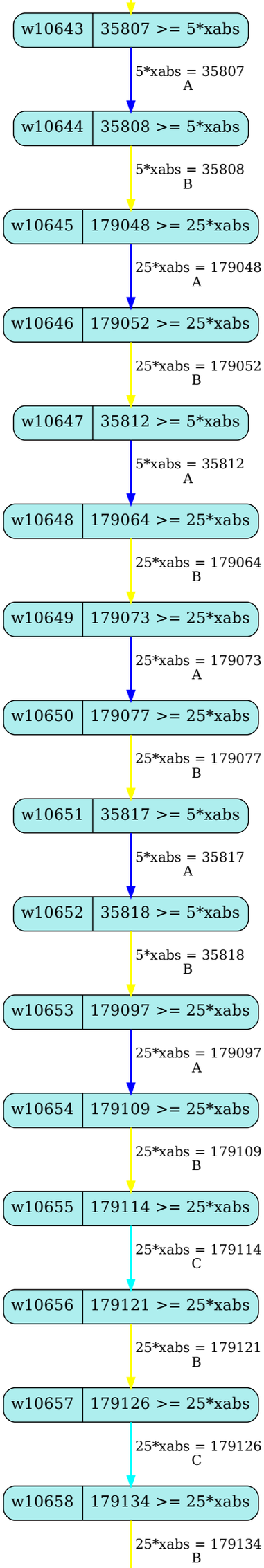
w10643
35807 >= 5*xabs
5*xabs = 35807
A
w10644
35808 >= 5*xabs
5*xabs = 35808
B
w10645
179048 >= 25*xabs
25*xabs = 179048
A
w10646
179052 >= 25*xabs
25*xabs = 179052
B
w10647
35812 >= 5*xabs
5*xabs = 35812
A
w10648
179064 >= 25*xabs
25*xabs = 179064
B
w10649
179073 >= 25*xabs
25*xabs = 179073
A
w10650
179077 >= 25*xabs
25*xabs = 179077
B
w10651
35817 >= 5*xabs
5*xabs = 35817
A
w10652
35818 >= 5*xabs
5*xabs = 35818
B
w10653
179097 >= 25*xabs
25*xabs = 179097
A
w10654
179109 >= 25*xabs
25*xabs = 179109
B
w10655
179114 >= 25*xabs
25*xabs = 179114
C
w10656
179121 >= 25*xabs
25*xabs = 179121
B
w10657
179126 >= 25*xabs
25*xabs = 179126
C
w10658
179134 >= 25*xabs
25*xabs = 179134
B

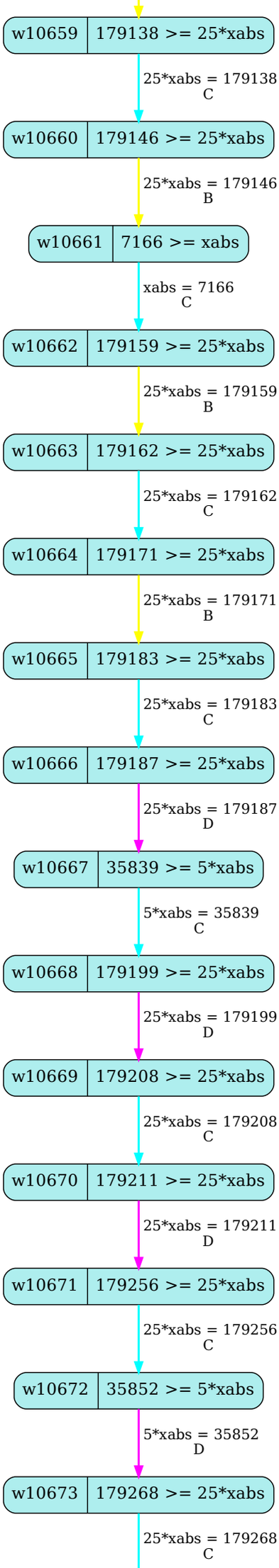
w10659
179138 >= 25*xabs
25*xabs = 179138
C
w10660
179146 >= 25*xabs
25*xabs = 179146
B
w10661
7166 >= xabs
xabs = 7166
C
w10662
179159 >= 25*xabs
25*xabs = 179159
B
w10663
179162 >= 25*xabs
25*xabs = 179162
C
w10664
179171 >= 25*xabs
25*xabs = 179171
B
w10665
179183 >= 25*xabs
25*xabs = 179183
C
w10666
179187 >= 25*xabs
25*xabs = 179187
D
w10667
35839 >= 5*xabs
5*xabs = 35839
C
w10668
179199 >= 25*xabs
25*xabs = 179199
D
w10669
179208 >= 25*xabs
25*xabs = 179208
C
w10670
179211 >= 25*xabs
25*xabs = 179211
D
w10671
179256 >= 25*xabs
25*xabs = 179256
C
w10672
35852 >= 5*xabs
5*xabs = 35852
D
w10673
179268 >= 25*xabs
25*xabs = 179268
C

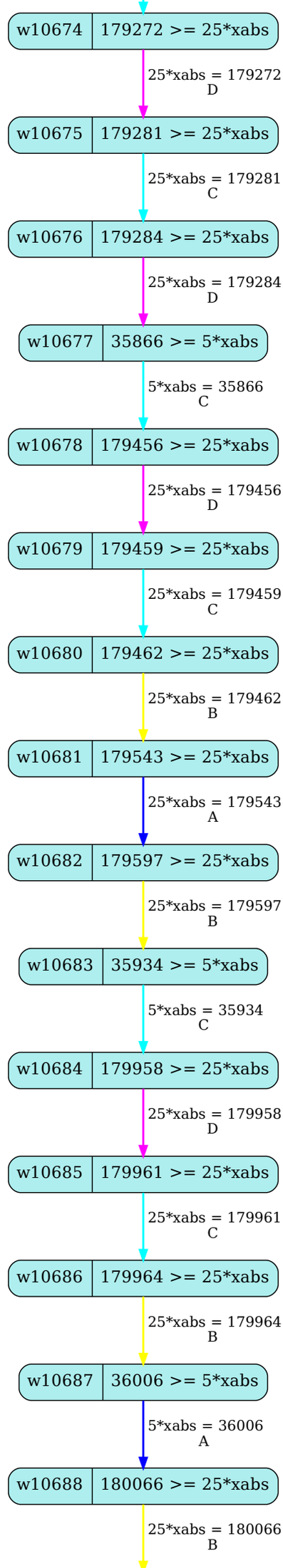
w10674
179272 >= 25*xabs
25*xabs = 179272
D
w10675
179281 >= 25*xabs
25*xabs = 179281
C
w10676
179284 >= 25*xabs
25*xabs = 179284
D
w10677
35866 >= 5*xabs
5*xabs = 35866
C
w10678
179456 >= 25*xabs
25*xabs = 179456
D
w10679
179459 >= 25*xabs
25*xabs = 179459
C
w10680
179462 >= 25*xabs
25*xabs = 179462
B
w10681
179543 >= 25*xabs
25*xabs = 179543
A
w10682
179597 >= 25*xabs
25*xabs = 179597
B
w10683
35934 >= 5*xabs
5*xabs = 35934
C
w10684
179958 >= 25*xabs
25*xabs = 179958
D
w10685
179961 >= 25*xabs
25*xabs = 179961
C
w10686
179964 >= 25*xabs
25*xabs = 179964
B
w10687
36006 >= 5*xabs
5*xabs = 36006
A
w10688
180066 >= 25*xabs
25*xabs = 180066
B

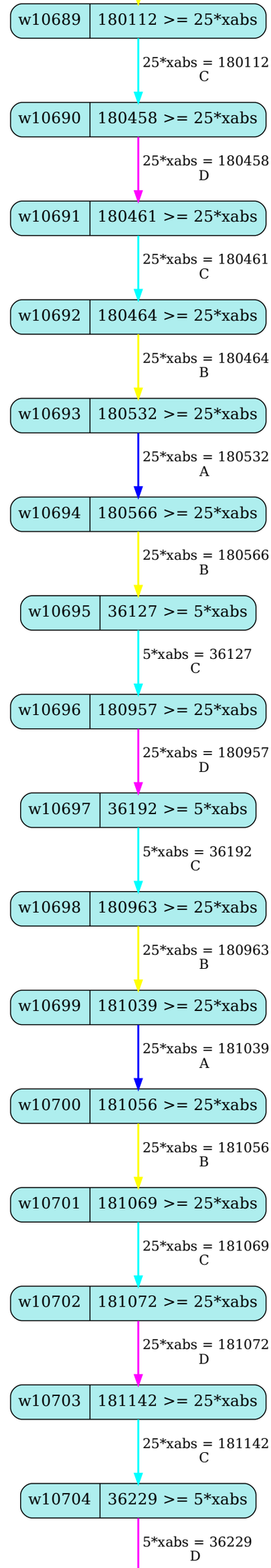
w10689
180112 >= 25*xabs
25*xabs = 180112
C
w10690
180458 >= 25*xabs
25*xabs = 180458
D
w10691
180461 >= 25*xabs
25*xabs = 180461
C
w10692
180464 >= 25*xabs
25*xabs = 180464
B
w10693
180532 >= 25*xabs
25*xabs = 180532
A
w10694
180566 >= 25*xabs
25*xabs = 180566
B
w10695
36127 >= 5*xabs
5*xabs = 36127
C
w10696
180957 >= 25*xabs
25*xabs = 180957
D
w10697
36192 >= 5*xabs
5*xabs = 36192
C
w10698
180963 >= 25*xabs
25*xabs = 180963
B
w10699
181039 >= 25*xabs
25*xabs = 181039
A
w10700
181056 >= 25*xabs
25*xabs = 181056
B
w10701
181069 >= 25*xabs
25*xabs = 181069
C
w10702
181072 >= 25*xabs
25*xabs = 181072
D
w10703
181142 >= 25*xabs
25*xabs = 181142
C
w10704
36229 >= 5*xabs
5*xabs = 36229
D

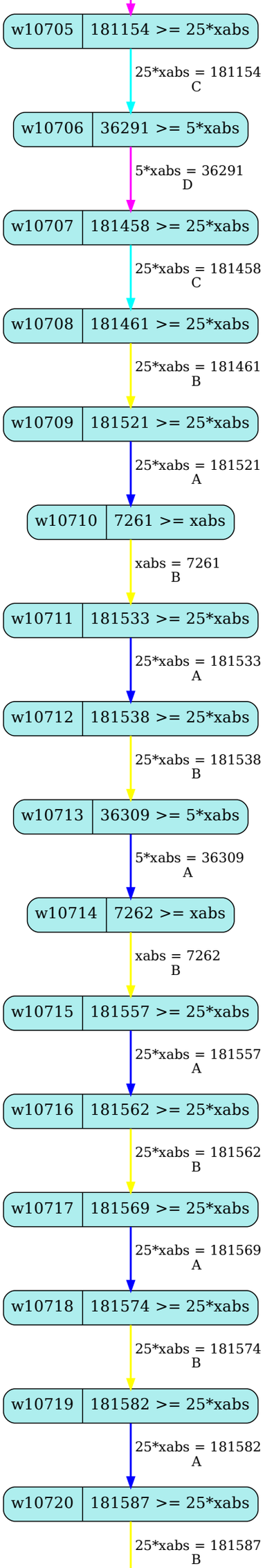
w10705
181154 >= 25*xabs
25*xabs = 181154
C
w10706
36291 >= 5*xabs
5*xabs = 36291
D
w10707
181458 >= 25*xabs
25*xabs = 181458
C
w10708
181461 >= 25*xabs
25*xabs = 181461
B
w10709
181521 >= 25*xabs
25*xabs = 181521
A
w10710
7261 >= xabs
xabs = 7261
B
w10711
181533 >= 25*xabs
25*xabs = 181533
A
w10712
181538 >= 25*xabs
25*xabs = 181538
B
w10713
36309 >= 5*xabs
5*xabs = 36309
A
w10714
7262 >= xabs
xabs = 7262
B
w10715
181557 >= 25*xabs
25*xabs = 181557
A
w10716
181562 >= 25*xabs
25*xabs = 181562
B
w10717
181569 >= 25*xabs
25*xabs = 181569
A
w10718
181574 >= 25*xabs
25*xabs = 181574
B
w10719
181582 >= 25*xabs
25*xabs = 181582
A
w10720
181587 >= 25*xabs
25*xabs = 181587
B

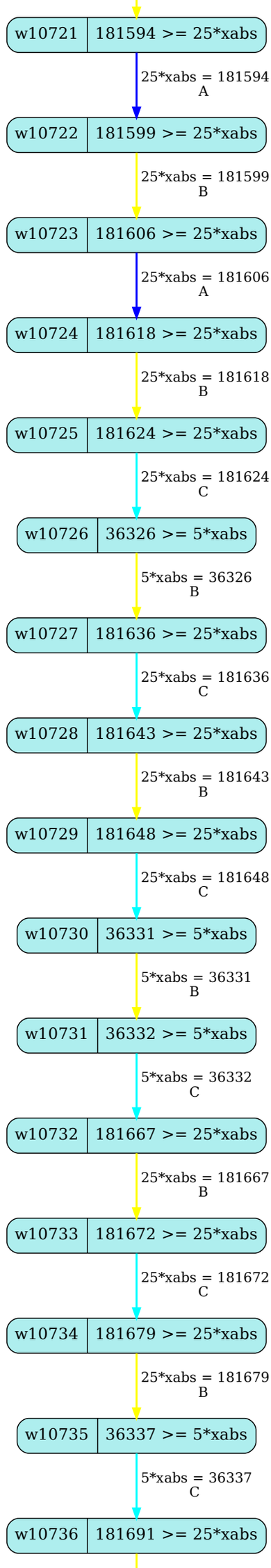
w10721
181594 >= 25*xabs
25*xabs = 181594
A
w10722
181599 >= 25*xabs
25*xabs = 181599
B
w10723
181606 >= 25*xabs
25*xabs = 181606
A
w10724
181618 >= 25*xabs
25*xabs = 181618
B
w10725
181624 >= 25*xabs
25*xabs = 181624
C
w10726
36326 >= 5*xabs
5*xabs = 36326
B
w10727
181636 >= 25*xabs
25*xabs = 181636
C
w10728
181643 >= 25*xabs
25*xabs = 181643
B
w10729
181648 >= 25*xabs
25*xabs = 181648
C
w10730
36331 >= 5*xabs
5*xabs = 36331
B
w10731
36332 >= 5*xabs
5*xabs = 36332
C
w10732
181667 >= 25*xabs
25*xabs = 181667
B
w10733
181672 >= 25*xabs
25*xabs = 181672
C
w10734
181679 >= 25*xabs
25*xabs = 181679
B
w10735
36337 >= 5*xabs
5*xabs = 36337
C
w10736
181691 >= 25*xabs

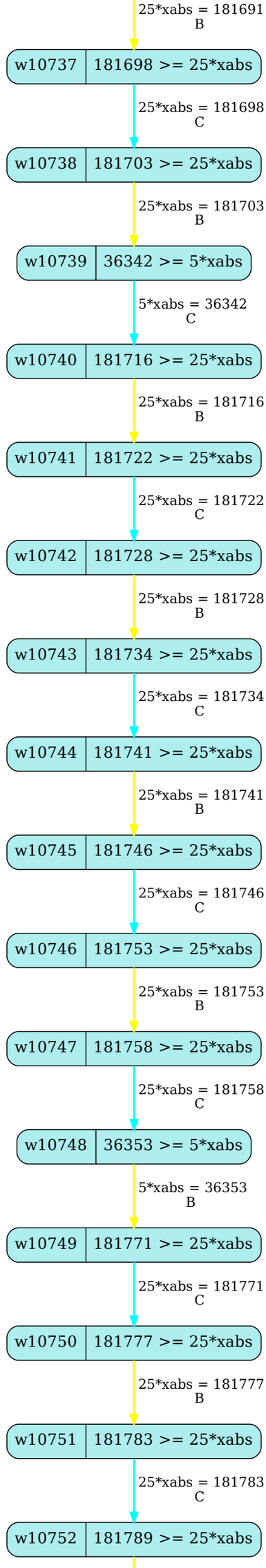
25*xabs = 181691
B
w10737
181698 >= 25*xabs
25*xabs = 181698
C
w10738
181703 >= 25*xabs
25*xabs = 181703
B
w10739
36342 >= 5*xabs
5*xabs = 36342
C
w10740
181716 >= 25*xabs
25*xabs = 181716
B
w10741
181722 >= 25*xabs
25*xabs = 181722
C
w10742
181728 >= 25*xabs
25*xabs = 181728
B
w10743
181734 >= 25*xabs
25*xabs = 181734
C
w10744
181741 >= 25*xabs
25*xabs = 181741
B
w10745
181746 >= 25*xabs
25*xabs = 181746
C
w10746
181753 >= 25*xabs
25*xabs = 181753
B
w10747
181758 >= 25*xabs
25*xabs = 181758
C
w10748
36353 >= 5*xabs
5*xabs = 36353
B
w10749
181771 >= 25*xabs
25*xabs = 181771
C
w10750
181777 >= 25*xabs
25*xabs = 181777
B
w10751
181783 >= 25*xabs
25*xabs = 181783
C
w10752
181789 >= 25*xabs

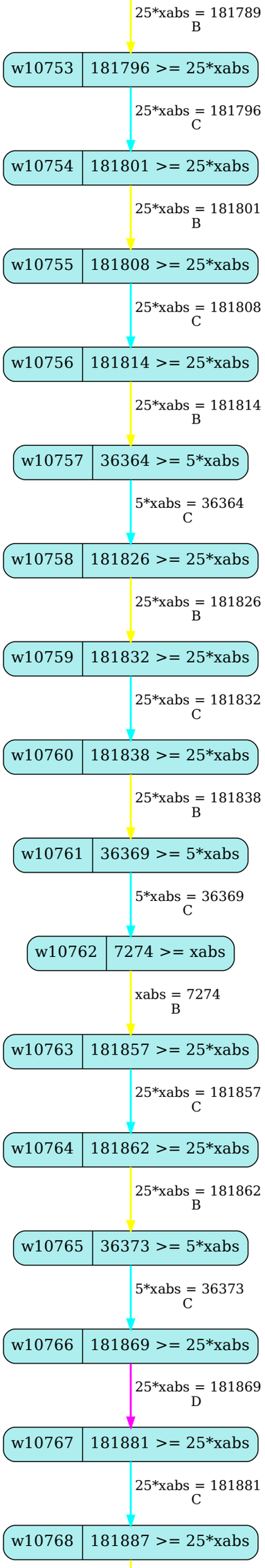
25*xabs = 181789
B
w10753
181796 >= 25*xabs
25*xabs = 181796
C
w10754
181801 >= 25*xabs
25*xabs = 181801
B
w10755
181808 >= 25*xabs
25*xabs = 181808
C
w10756
181814 >= 25*xabs
25*xabs = 181814
B
w10757
36364 >= 5*xabs
5*xabs = 36364
C
w10758
181826 >= 25*xabs
25*xabs = 181826
B
w10759
181832 >= 25*xabs
25*xabs = 181832
C
w10760
181838 >= 25*xabs
25*xabs = 181838
B
w10761
36369 >= 5*xabs
5*xabs = 36369
C
w10762
7274 >= xabs
xabs = 7274
B
w10763
181857 >= 25*xabs
25*xabs = 181857
C
w10764
181862 >= 25*xabs
25*xabs = 181862
B
w10765
36373 >= 5*xabs
5*xabs = 36373
C
w10766
181869 >= 25*xabs
25*xabs = 181869
D
w10767
181881 >= 25*xabs
25*xabs = 181881
C
w10768
181887 >= 25*xabs

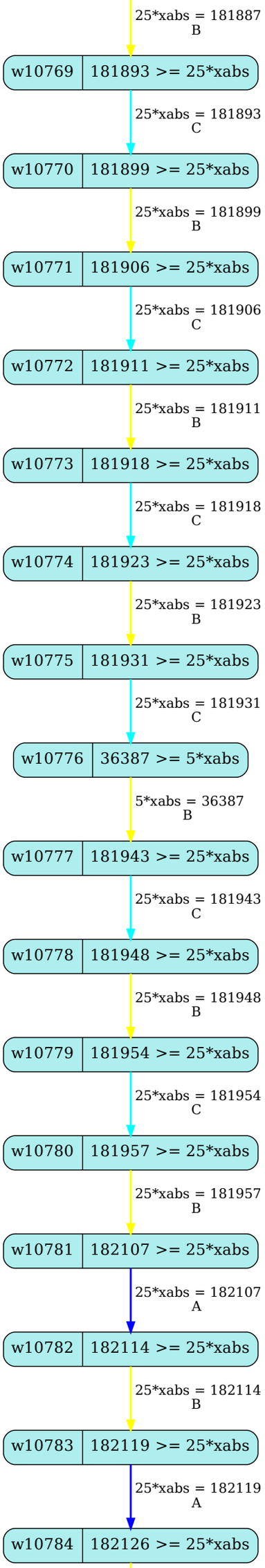
25*xabs = 181887
B
w10769
181893 >= 25*xabs
25*xabs = 181893
C
w10770
181899 >= 25*xabs
25*xabs = 181899
B
w10771
181906 >= 25*xabs
25*xabs = 181906
C
w10772
181911 >= 25*xabs
25*xabs = 181911
B
w10773
181918 >= 25*xabs
25*xabs = 181918
C
w10774
181923 >= 25*xabs
25*xabs = 181923
B
w10775
181931 >= 25*xabs
25*xabs = 181931
C
w10776
36387 >= 5*xabs
5*xabs = 36387
B
w10777
181943 >= 25*xabs
25*xabs = 181943
C
w10778
181948 >= 25*xabs
25*xabs = 181948
B
w10779
181954 >= 25*xabs
25*xabs = 181954
C
w10780
181957 >= 25*xabs
25*xabs = 181957
B
w10781
182107 >= 25*xabs
25*xabs = 182107
A
w10782
182114 >= 25*xabs
25*xabs = 182114
B
w10783
182119 >= 25*xabs
25*xabs = 182119
A
w10784
182126 >= 25*xabs

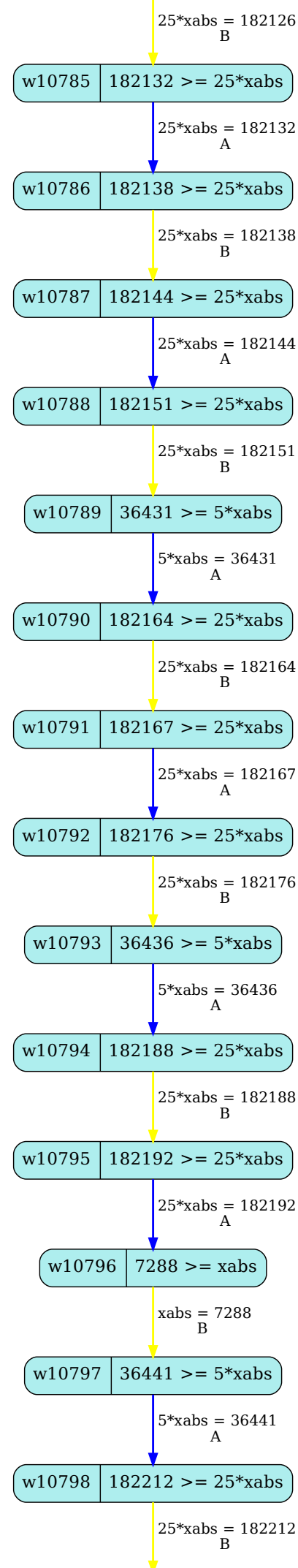
25*xabs = 182126
B
w10785
182132 >= 25*xabs
25*xabs = 182132
A
w10786
182138 >= 25*xabs
25*xabs = 182138
B
w10787
182144 >= 25*xabs
25*xabs = 182144
A
w10788
182151 >= 25*xabs
25*xabs = 182151
B
w10789
36431 >= 5*xabs
5*xabs = 36431
A
w10790
182164 >= 25*xabs
25*xabs = 182164
B
w10791
182167 >= 25*xabs
25*xabs = 182167
A
w10792
182176 >= 25*xabs
25*xabs = 182176
B
w10793
36436 >= 5*xabs
5*xabs = 36436
A
w10794
182188 >= 25*xabs
25*xabs = 182188
B
w10795
182192 >= 25*xabs
25*xabs = 182192
A
w10796
7288 >= xabs
xabs = 7288
B
w10797
36441 >= 5*xabs
5*xabs = 36441
A
w10798
182212 >= 25*xabs
25*xabs = 182212
B

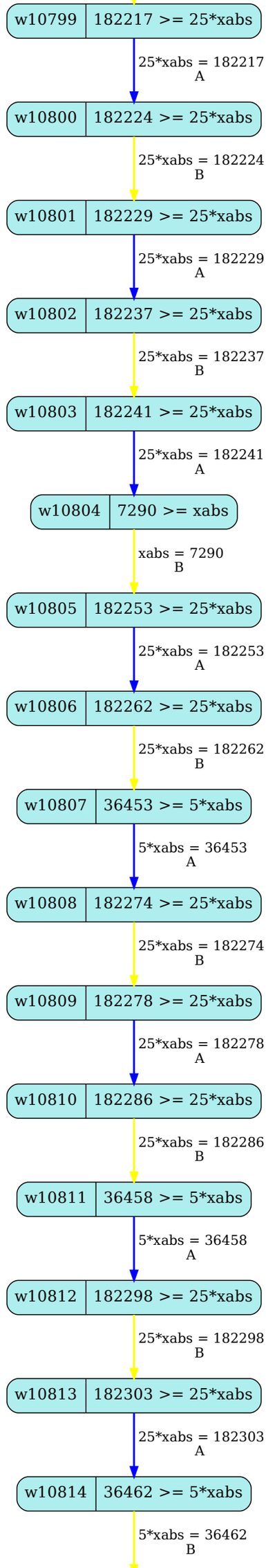
w10799
182217 >= 25*xabs
25*xabs = 182217
A
w10800
182224 >= 25*xabs
25*xabs = 182224
B
w10801
182229 >= 25*xabs
25*xabs = 182229
A
w10802
182237 >= 25*xabs
25*xabs = 182237
B
w10803
182241 >= 25*xabs
25*xabs = 182241
A
w10804
7290 >= xabs
xabs = 7290
B
w10805
182253 >= 25*xabs
25*xabs = 182253
A
w10806
182262 >= 25*xabs
25*xabs = 182262
B
w10807
36453 >= 5*xabs
5*xabs = 36453
A
w10808
182274 >= 25*xabs
25*xabs = 182274
B
w10809
182278 >= 25*xabs
25*xabs = 182278
A
w10810
182286 >= 25*xabs
25*xabs = 182286
B
w10811
36458 >= 5*xabs
5*xabs = 36458
A
w10812
182298 >= 25*xabs
25*xabs = 182298
B
w10813
182303 >= 25*xabs
25*xabs = 182303
A
w10814
36462 >= 5*xabs
5*xabs = 36462
B

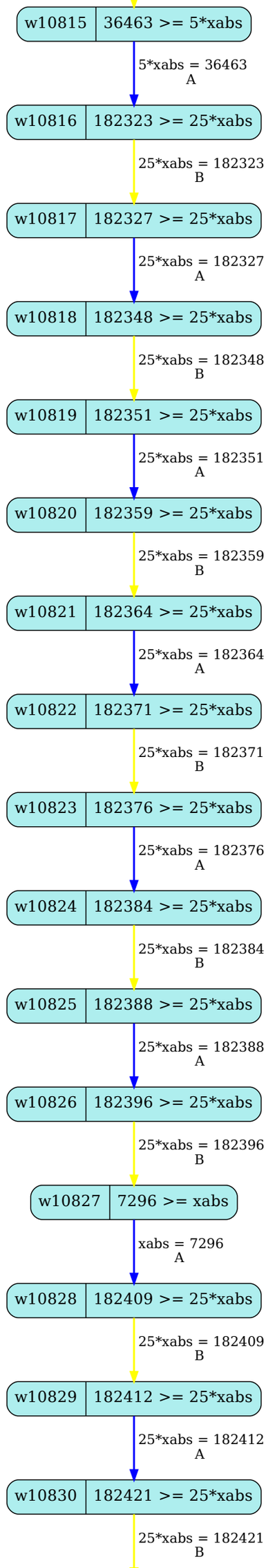
w10815
36463 >= 5*xabs
5*xabs = 36463
A
w10816
182323 >= 25*xabs
25*xabs = 182323
B
w10817
182327 >= 25*xabs
25*xabs = 182327
A
w10818
182348 >= 25*xabs
25*xabs = 182348
B
w10819
182351 >= 25*xabs
25*xabs = 182351
A
w10820
182359 >= 25*xabs
25*xabs = 182359
B
w10821
182364 >= 25*xabs
25*xabs = 182364
A
w10822
182371 >= 25*xabs
25*xabs = 182371
B
w10823
182376 >= 25*xabs
25*xabs = 182376
A
w10824
182384 >= 25*xabs
25*xabs = 182384
B
w10825
182388 >= 25*xabs
25*xabs = 182388
A
w10826
182396 >= 25*xabs
25*xabs = 182396
B
w10827
7296 >= xabs
xabs = 7296
A
w10828
182409 >= 25*xabs
25*xabs = 182409
B
w10829
182412 >= 25*xabs
25*xabs = 182412
A
w10830
182421 >= 25*xabs
25*xabs = 182421
B

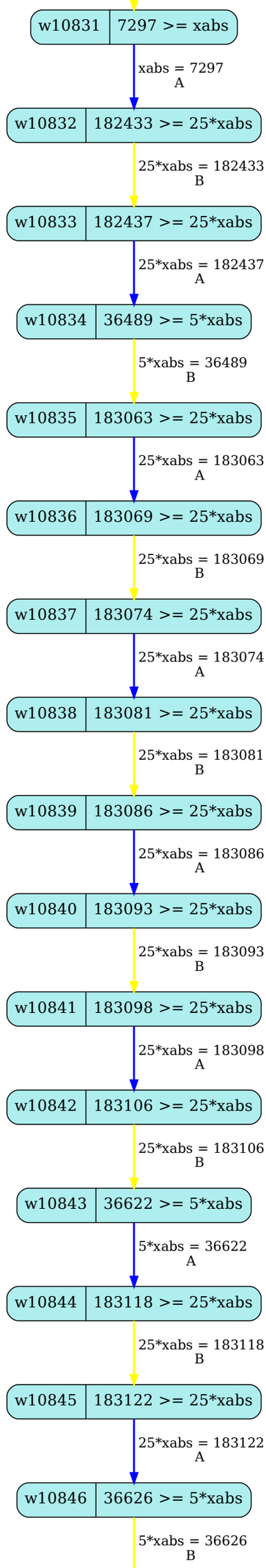
w10831
7297 >= xabs
xabs = 7297
A
w10832
182433 >= 25*xabs
25*xabs = 182433
B
w10833
182437 >= 25*xabs
25*xabs = 182437
A
w10834
36489 >= 5*xabs
5*xabs = 36489
B
w10835
183063 >= 25*xabs
25*xabs = 183063
A
w10836
183069 >= 25*xabs
25*xabs = 183069
B
w10837
183074 >= 25*xabs
25*xabs = 183074
A
w10838
183081 >= 25*xabs
25*xabs = 183081
B
w10839
183086 >= 25*xabs
25*xabs = 183086
A
w10840
183093 >= 25*xabs
25*xabs = 183093
B
w10841
183098 >= 25*xabs
25*xabs = 183098
A
w10842
183106 >= 25*xabs
25*xabs = 183106
B
w10843
36622 >= 5*xabs
5*xabs = 36622
A
w10844
183118 >= 25*xabs
25*xabs = 183118
B
w10845
183122 >= 25*xabs
25*xabs = 183122
A
w10846
36626 >= 5*xabs
5*xabs = 36626
B

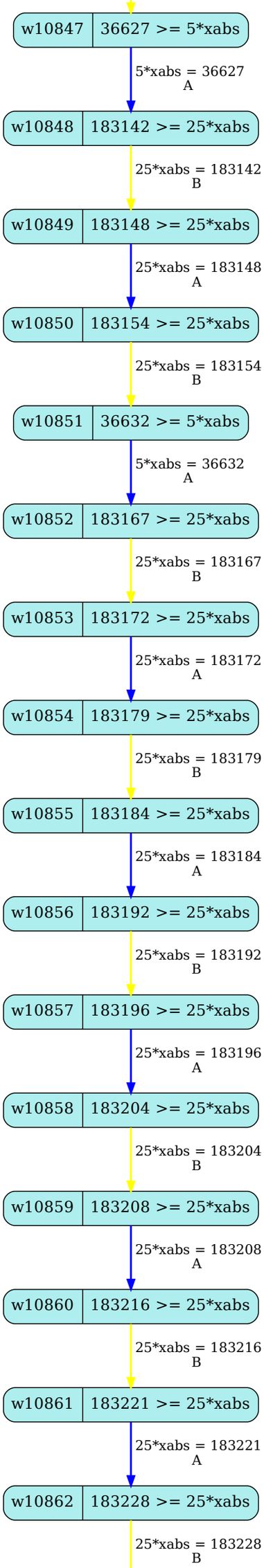
w10847
36627 >= 5*xabs
5*xabs = 36627
A
w10848
183142 >= 25*xabs
25*xabs = 183142
B
w10849
183148 >= 25*xabs
25*xabs = 183148
A
w10850
183154 >= 25*xabs
25*xabs = 183154
B
w10851
36632 >= 5*xabs
5*xabs = 36632
A
w10852
183167 >= 25*xabs
25*xabs = 183167
B
w10853
183172 >= 25*xabs
25*xabs = 183172
A
w10854
183179 >= 25*xabs
25*xabs = 183179
B
w10855
183184 >= 25*xabs
25*xabs = 183184
A
w10856
183192 >= 25*xabs
25*xabs = 183192
B
w10857
183196 >= 25*xabs
25*xabs = 183196
A
w10858
183204 >= 25*xabs
25*xabs = 183204
B
w10859
183208 >= 25*xabs
25*xabs = 183208
A
w10860
183216 >= 25*xabs
25*xabs = 183216
B
w10861
183221 >= 25*xabs
25*xabs = 183221
A
w10862
183228 >= 25*xabs
25*xabs = 183228
B

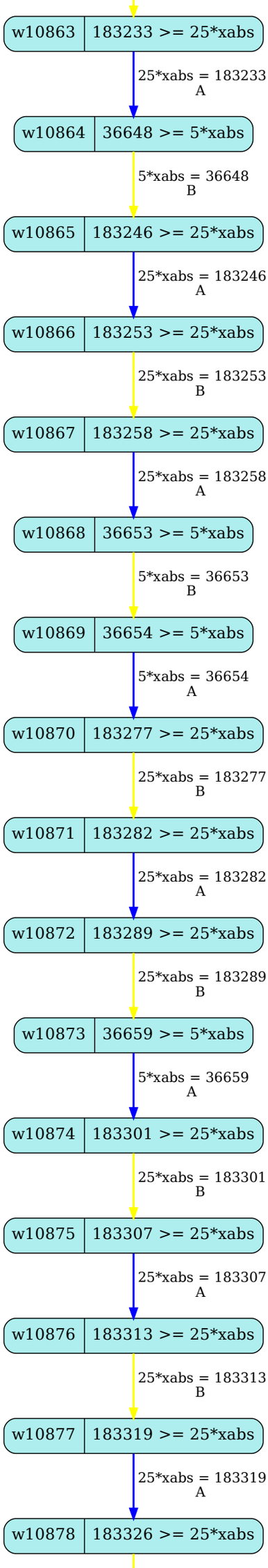
w10863
183233 >= 25*xabs
25*xabs = 183233
A
w10864
36648 >= 5*xabs
5*xabs = 36648
B
w10865
183246 >= 25*xabs
25*xabs = 183246
A
w10866
183253 >= 25*xabs
25*xabs = 183253
B
w10867
183258 >= 25*xabs
25*xabs = 183258
A
w10868
36653 >= 5*xabs
5*xabs = 36653
B
w10869
36654 >= 5*xabs
5*xabs = 36654
A
w10870
183277 >= 25*xabs
25*xabs = 183277
B
w10871
183282 >= 25*xabs
25*xabs = 183282
A
w10872
183289 >= 25*xabs
25*xabs = 183289
B
w10873
36659 >= 5*xabs
5*xabs = 36659
A
w10874
183301 >= 25*xabs
25*xabs = 183301
B
w10875
183307 >= 25*xabs
25*xabs = 183307
A
w10876
183313 >= 25*xabs
25*xabs = 183313
B
w10877
183319 >= 25*xabs
25*xabs = 183319
A
w10878
183326 >= 25*xabs

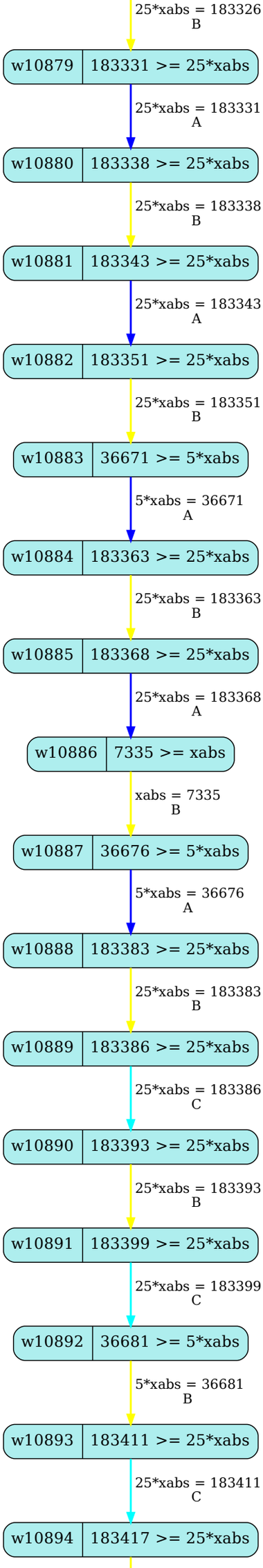
25*xabs = 183326
B
w10879
183331 >= 25*xabs
25*xabs = 183331
A
w10880
183338 >= 25*xabs
25*xabs = 183338
B
w10881
183343 >= 25*xabs
25*xabs = 183343
A
w10882
183351 >= 25*xabs
25*xabs = 183351
B
w10883
36671 >= 5*xabs
5*xabs = 36671
A
w10884
183363 >= 25*xabs
25*xabs = 183363
B
w10885
183368 >= 25*xabs
25*xabs = 183368
A
w10886
7335 >= xabs
xabs = 7335
B
w10887
36676 >= 5*xabs
5*xabs = 36676
A
w10888
183383 >= 25*xabs
25*xabs = 183383
B
w10889
183386 >= 25*xabs
25*xabs = 183386
C
w10890
183393 >= 25*xabs
25*xabs = 183393
B
w10891
183399 >= 25*xabs
25*xabs = 183399
C
w10892
36681 >= 5*xabs
5*xabs = 36681
B
w10893
183411 >= 25*xabs
25*xabs = 183411
C
w10894
183417 >= 25*xabs

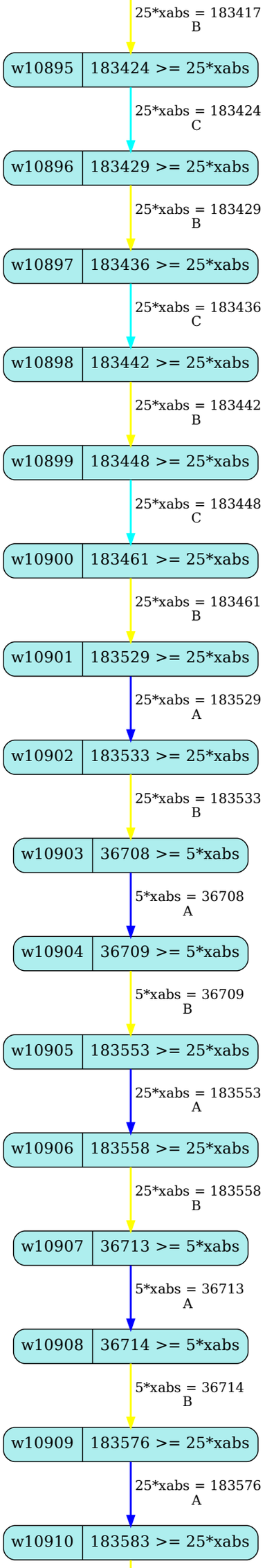
25*xabs = 183417
B
w10895
183424 >= 25*xabs
25*xabs = 183424
C
w10896
183429 >= 25*xabs
25*xabs = 183429
B
w10897
183436 >= 25*xabs
25*xabs = 183436
C
w10898
183442 >= 25*xabs
25*xabs = 183442
B
w10899
183448 >= 25*xabs
25*xabs = 183448
C
w10900
183461 >= 25*xabs
25*xabs = 183461
B
w10901
183529 >= 25*xabs
25*xabs = 183529
A
w10902
183533 >= 25*xabs
25*xabs = 183533
B
w10903
36708 >= 5*xabs
5*xabs = 36708
A
w10904
36709 >= 5*xabs
5*xabs = 36709
B
w10905
183553 >= 25*xabs
25*xabs = 183553
A
w10906
183558 >= 25*xabs
25*xabs = 183558
B
w10907
36713 >= 5*xabs
5*xabs = 36713
A
w10908
36714 >= 5*xabs
5*xabs = 36714
B
w10909
183576 >= 25*xabs
25*xabs = 183576
A
w10910
183583 >= 25*xabs

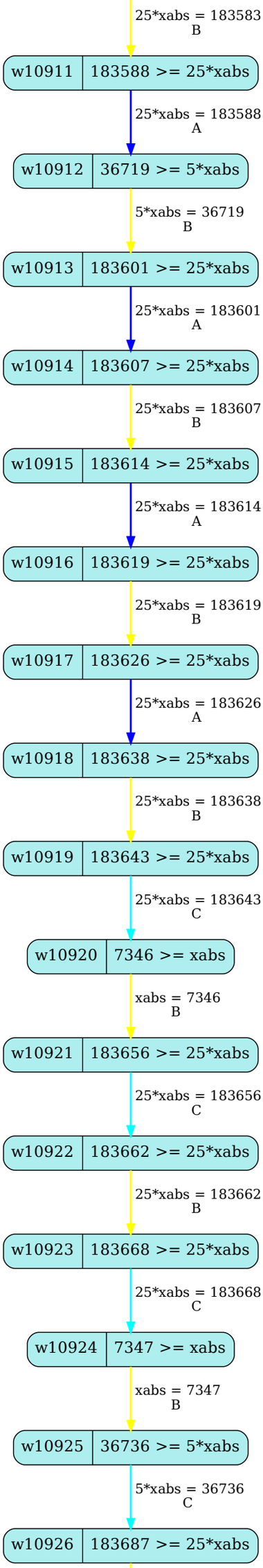
25*xabs = 183583
B
w10911
183588 >= 25*xabs
25*xabs = 183588
A
w10912
36719 >= 5*xabs
5*xabs = 36719
B
w10913
183601 >= 25*xabs
25*xabs = 183601
A
w10914
183607 >= 25*xabs
25*xabs = 183607
B
w10915
183614 >= 25*xabs
25*xabs = 183614
A
w10916
183619 >= 25*xabs
25*xabs = 183619
B
w10917
183626 >= 25*xabs
25*xabs = 183626
A
w10918
183638 >= 25*xabs
25*xabs = 183638
B
w10919
183643 >= 25*xabs
25*xabs = 183643
C
w10920
7346 >= xabs
xabs = 7346
B
w10921
183656 >= 25*xabs
25*xabs = 183656
C
w10922
183662 >= 25*xabs
25*xabs = 183662
B
w10923
183668 >= 25*xabs
25*xabs = 183668
C
w10924
7347 >= xabs
xabs = 7347
B
w10925
36736 >= 5*xabs
5*xabs = 36736
C
w10926
183687 >= 25*xabs

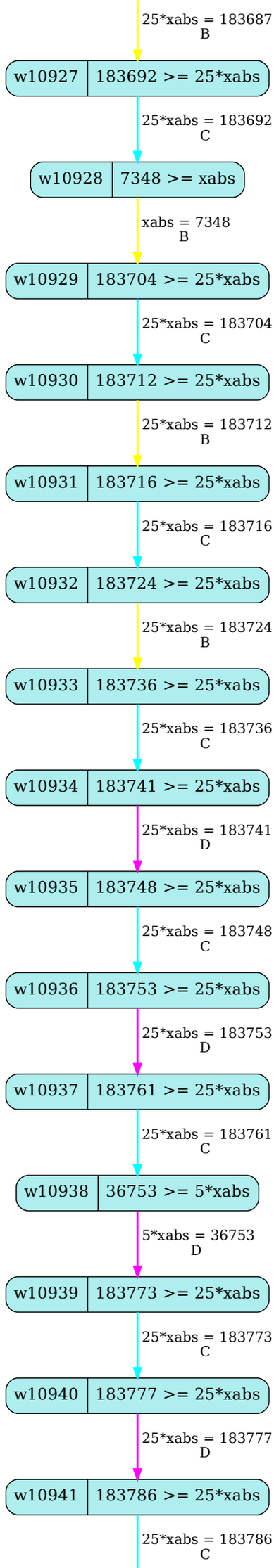
25*xabs = 183687
B
w10927
183692 >= 25*xabs
25*xabs = 183692
C
w10928
7348 >= xabs
xabs = 7348
B
w10929
183704 >= 25*xabs
25*xabs = 183704
C
w10930
183712 >= 25*xabs
25*xabs = 183712
B
w10931
183716 >= 25*xabs
25*xabs = 183716
C
w10932
183724 >= 25*xabs
25*xabs = 183724
B
w10933
183736 >= 25*xabs
25*xabs = 183736
C
w10934
183741 >= 25*xabs
25*xabs = 183741
D
w10935
183748 >= 25*xabs
25*xabs = 183748
C
w10936
183753 >= 25*xabs
25*xabs = 183753
D
w10937
183761 >= 25*xabs
25*xabs = 183761
C
w10938
36753 >= 5*xabs
5*xabs = 36753
D
w10939
183773 >= 25*xabs
25*xabs = 183773
C
w10940
183777 >= 25*xabs
25*xabs = 183777
D
w10941
183786 >= 25*xabs
25*xabs = 183786
C

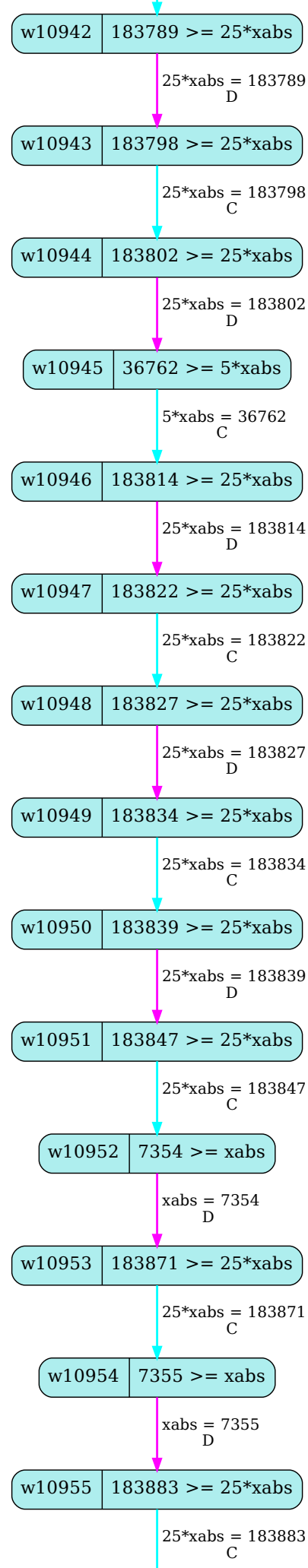
w10942
183789 >= 25*xabs
25*xabs = 183789
D
w10943
183798 >= 25*xabs
25*xabs = 183798
C
w10944
183802 >= 25*xabs
25*xabs = 183802
D
w10945
36762 >= 5*xabs
5*xabs = 36762
C
w10946
183814 >= 25*xabs
25*xabs = 183814
D
w10947
183822 >= 25*xabs
25*xabs = 183822
C
w10948
183827 >= 25*xabs
25*xabs = 183827
D
w10949
183834 >= 25*xabs
25*xabs = 183834
C
w10950
183839 >= 25*xabs
25*xabs = 183839
D
w10951
183847 >= 25*xabs
25*xabs = 183847
C
w10952
7354 >= xabs
xabs = 7354
D
w10953
183871 >= 25*xabs
25*xabs = 183871
C
w10954
7355 >= xabs
xabs = 7355
D
w10955
183883 >= 25*xabs
25*xabs = 183883
C

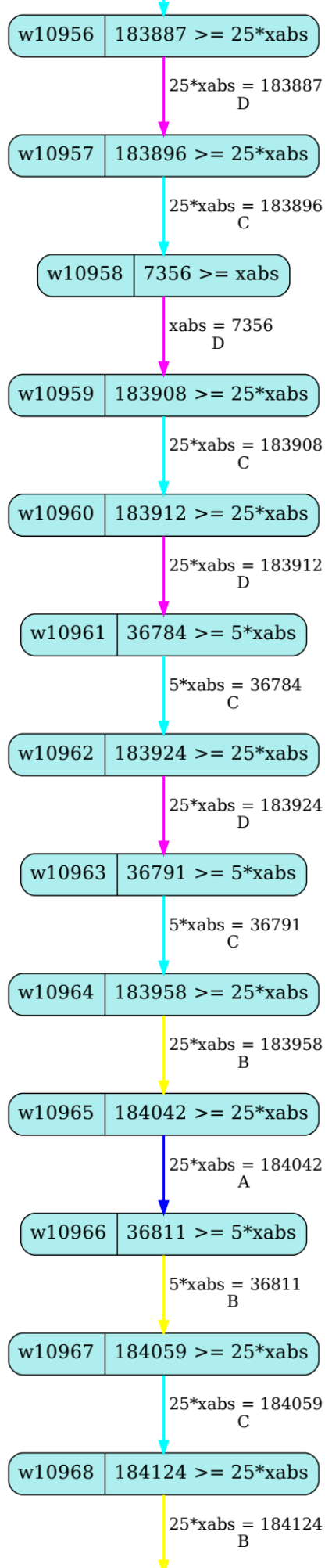
w10956
183887 >= 25*xabs
25*xabs = 183887
D
w10957
183896 >= 25*xabs
25*xabs = 183896
C
w10958
7356 >= xabs
xabs = 7356
D
w10959
183908 >= 25*xabs
25*xabs = 183908
C
w10960
183912 >= 25*xabs
25*xabs = 183912
D
w10961
36784 >= 5*xabs
5*xabs = 36784
C
w10962
183924 >= 25*xabs
25*xabs = 183924
D
w10963
36791 >= 5*xabs
5*xabs = 36791
C
w10964
183958 >= 25*xabs
25*xabs = 183958
B
w10965
184042 >= 25*xabs
25*xabs = 184042
A
w10966
36811 >= 5*xabs
5*xabs = 36811
B
w10967
184059 >= 25*xabs
25*xabs = 184059
C
w10968
184124 >= 25*xabs
25*xabs = 184124
B

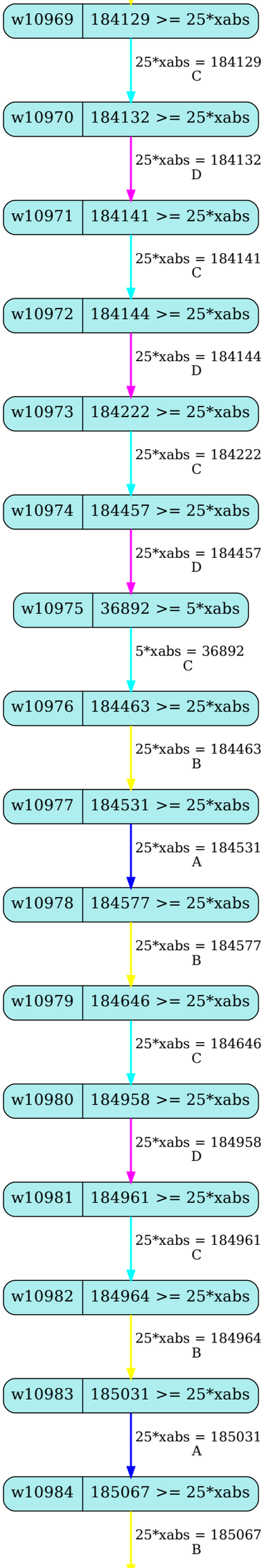
w10969
184129 >= 25*xabs
25*xabs = 184129
C
w10970
184132 >= 25*xabs
25*xabs = 184132
D
w10971
184141 >= 25*xabs
25*xabs = 184141
C
w10972
184144 >= 25*xabs
25*xabs = 184144
D
w10973
184222 >= 25*xabs
25*xabs = 184222
C
w10974
184457 >= 25*xabs
25*xabs = 184457
D
w10975
36892 >= 5*xabs
5*xabs = 36892
C
w10976
184463 >= 25*xabs
25*xabs = 184463
B
w10977
184531 >= 25*xabs
25*xabs = 184531
A
w10978
184577 >= 25*xabs
25*xabs = 184577
B
w10979
184646 >= 25*xabs
25*xabs = 184646
C
w10980
184958 >= 25*xabs
25*xabs = 184958
D
w10981
184961 >= 25*xabs
25*xabs = 184961
C
w10982
184964 >= 25*xabs
25*xabs = 184964
B
w10983
185031 >= 25*xabs
25*xabs = 185031
A
w10984
185067 >= 25*xabs
25*xabs = 185067
B

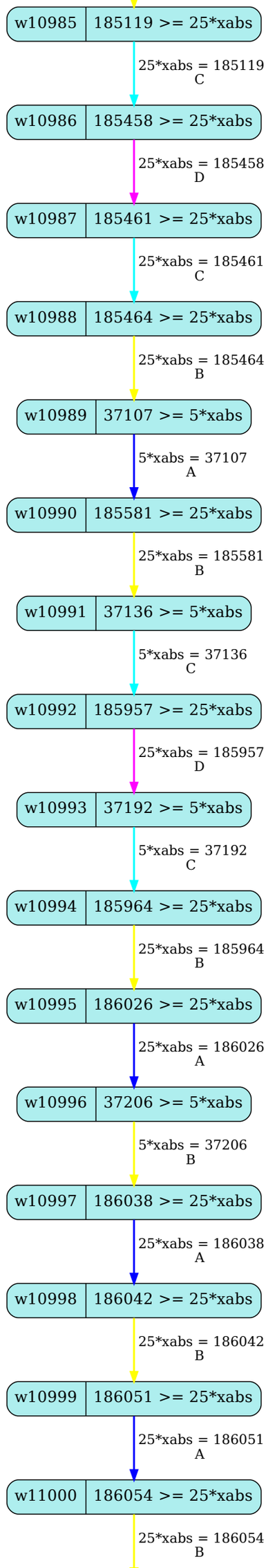
w10985
185119 >= 25*xabs
25*xabs = 185119
C
w10986
185458 >= 25*xabs
25*xabs = 185458
D
w10987
185461 >= 25*xabs
25*xabs = 185461
C
w10988
185464 >= 25*xabs
25*xabs = 185464
B
w10989
37107 >= 5*xabs
5*xabs = 37107
A
w10990
185581 >= 25*xabs
25*xabs = 185581
B
w10991
37136 >= 5*xabs
5*xabs = 37136
C
w10992
185957 >= 25*xabs
25*xabs = 185957
D
w10993
37192 >= 5*xabs
5*xabs = 37192
C
w10994
185964 >= 25*xabs
25*xabs = 185964
B
w10995
186026 >= 25*xabs
25*xabs = 186026
A
w10996
37206 >= 5*xabs
5*xabs = 37206
B
w10997
186038 >= 25*xabs
25*xabs = 186038
A
w10998
186042 >= 25*xabs
25*xabs = 186042
B
w10999
186051 >= 25*xabs
25*xabs = 186051
A
w11000
186054 >= 25*xabs
25*xabs = 186054
B

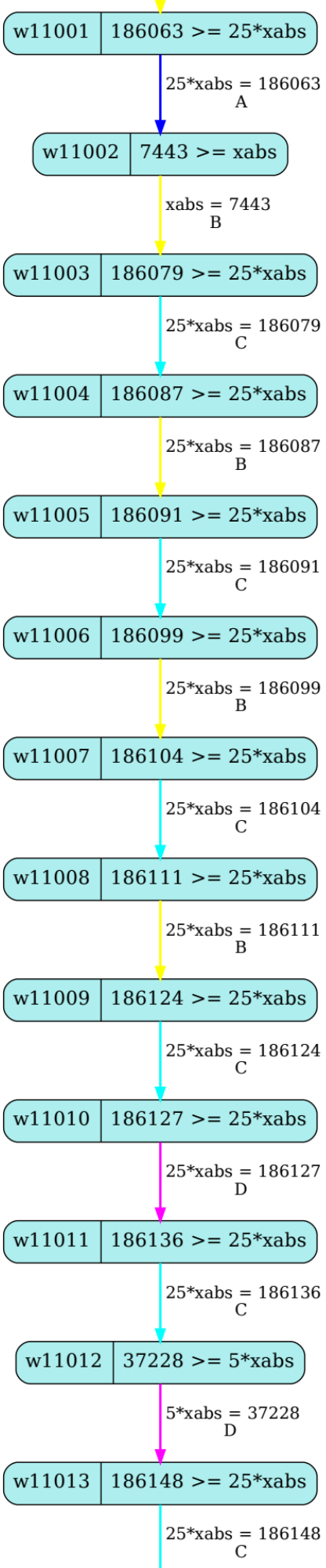
w11001
186063 >= 25*xabs
25*xabs = 186063
A
w11002
7443 >= xabs
xabs = 7443
B
w11003
186079 >= 25*xabs
25*xabs = 186079
C
w11004
186087 >= 25*xabs
25*xabs = 186087
B
w11005
186091 >= 25*xabs
25*xabs = 186091
C
w11006
186099 >= 25*xabs
25*xabs = 186099
B
w11007
186104 >= 25*xabs
25*xabs = 186104
C
w11008
186111 >= 25*xabs
25*xabs = 186111
B
w11009
186124 >= 25*xabs
25*xabs = 186124
C
w11010
186127 >= 25*xabs
25*xabs = 186127
D
w11011
186136 >= 25*xabs
25*xabs = 186136
C
w11012
37228 >= 5*xabs
5*xabs = 37228
D
w11013
186148 >= 25*xabs
25*xabs = 186148
C

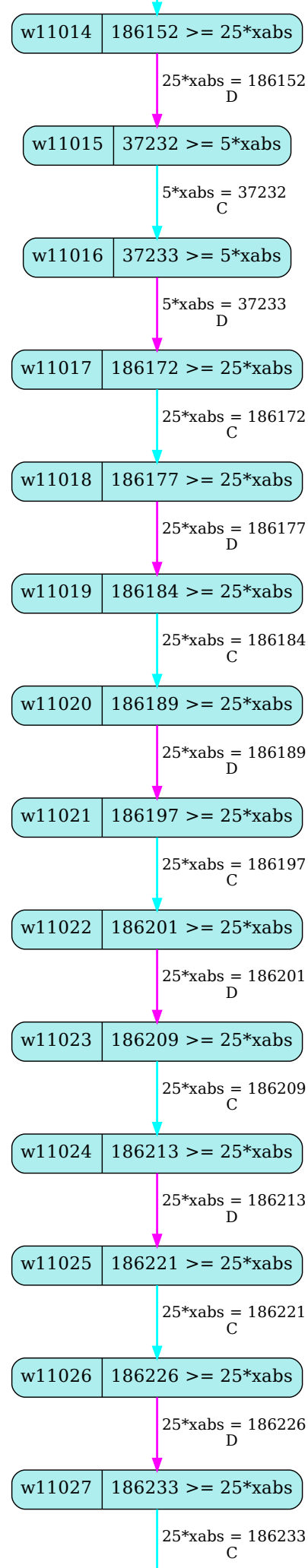
w11014
186152 >= 25*xabs
25*xabs = 186152
D
w11015
37232 >= 5*xabs
5*xabs = 37232
C
w11016
37233 >= 5*xabs
5*xabs = 37233
D
w11017
186172 >= 25*xabs
25*xabs = 186172
C
w11018
186177 >= 25*xabs
25*xabs = 186177
D
w11019
186184 >= 25*xabs
25*xabs = 186184
C
w11020
186189 >= 25*xabs
25*xabs = 186189
D
w11021
186197 >= 25*xabs
25*xabs = 186197
C
w11022
186201 >= 25*xabs
25*xabs = 186201
D
w11023
186209 >= 25*xabs
25*xabs = 186209
C
w11024
186213 >= 25*xabs
25*xabs = 186213
D
w11025
186221 >= 25*xabs
25*xabs = 186221
C
w11026
186226 >= 25*xabs
25*xabs = 186226
D
w11027
186233 >= 25*xabs
25*xabs = 186233
C

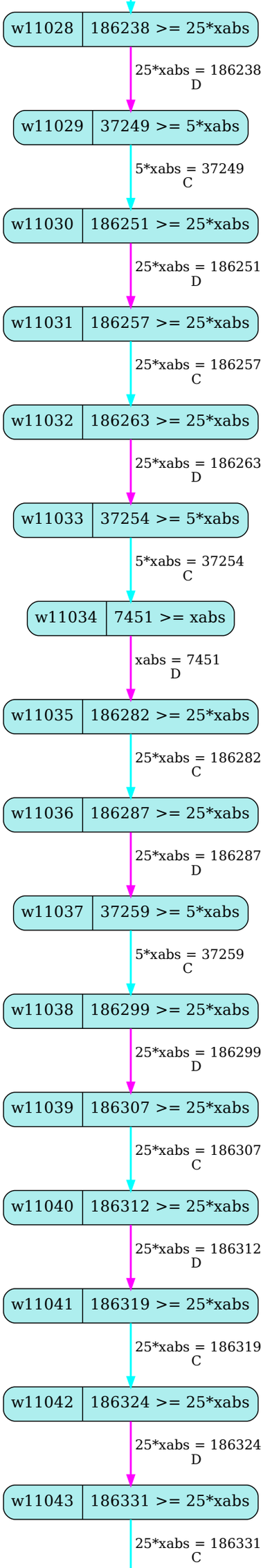
w11028
186238 >= 25*xabs
25*xabs = 186238
D
w11029
37249 >= 5*xabs
5*xabs = 37249
C
w11030
186251 >= 25*xabs
25*xabs = 186251
D
w11031
186257 >= 25*xabs
25*xabs = 186257
C
w11032
186263 >= 25*xabs
25*xabs = 186263
D
w11033
37254 >= 5*xabs
5*xabs = 37254
C
w11034
7451 >= xabs
xabs = 7451
D
w11035
186282 >= 25*xabs
25*xabs = 186282
C
w11036
186287 >= 25*xabs
25*xabs = 186287
D
w11037
37259 >= 5*xabs
5*xabs = 37259
C
w11038
186299 >= 25*xabs
25*xabs = 186299
D
w11039
186307 >= 25*xabs
25*xabs = 186307
C
w11040
186312 >= 25*xabs
25*xabs = 186312
D
w11041
186319 >= 25*xabs
25*xabs = 186319
C
w11042
186324 >= 25*xabs
25*xabs = 186324
D
w11043
186331 >= 25*xabs
25*xabs = 186331
C

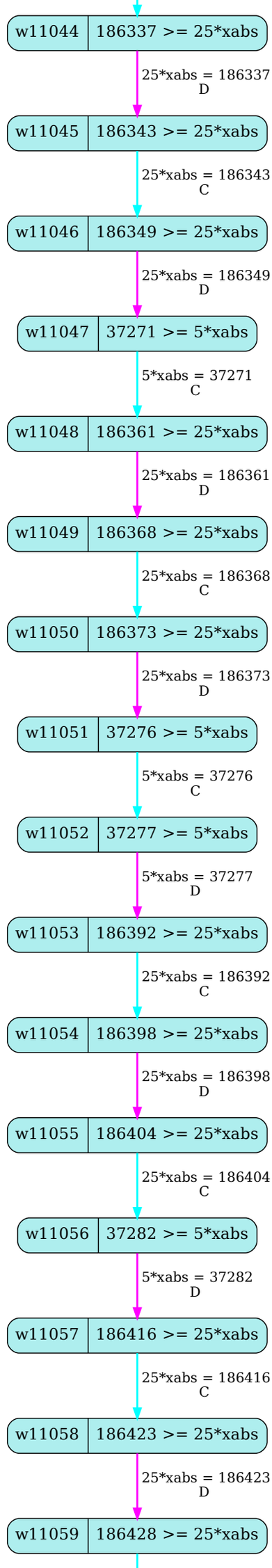
w11044
186337 >= 25*xabs
25*xabs = 186337
D
w11045
186343 >= 25*xabs
25*xabs = 186343
C
w11046
186349 >= 25*xabs
25*xabs = 186349
D
w11047
37271 >= 5*xabs
5*xabs = 37271
C
w11048
186361 >= 25*xabs
25*xabs = 186361
D
w11049
186368 >= 25*xabs
25*xabs = 186368
C
w11050
186373 >= 25*xabs
25*xabs = 186373
D
w11051
37276 >= 5*xabs
5*xabs = 37276
C
w11052
37277 >= 5*xabs
5*xabs = 37277
D
w11053
186392 >= 25*xabs
25*xabs = 186392
C
w11054
186398 >= 25*xabs
25*xabs = 186398
D
w11055
186404 >= 25*xabs
25*xabs = 186404
C
w11056
37282 >= 5*xabs
5*xabs = 37282
D
w11057
186416 >= 25*xabs
25*xabs = 186416
C
w11058
186423 >= 25*xabs
25*xabs = 186423
D
w11059
186428 >= 25*xabs

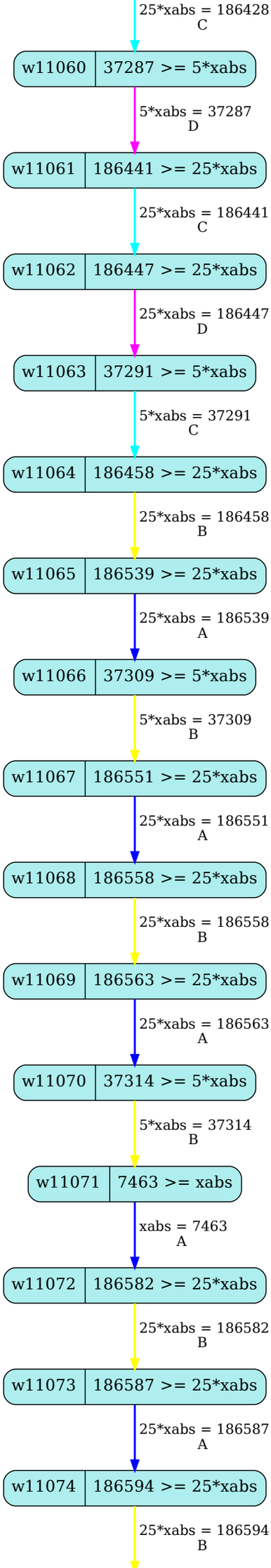
25*xabs = 186428
C
w11060
37287 >= 5*xabs
5*xabs = 37287
D
w11061
186441 >= 25*xabs
25*xabs = 186441
C
w11062
186447 >= 25*xabs
25*xabs = 186447
D
w11063
37291 >= 5*xabs
5*xabs = 37291
C
w11064
186458 >= 25*xabs
25*xabs = 186458
B
w11065
186539 >= 25*xabs
25*xabs = 186539
A
w11066
37309 >= 5*xabs
5*xabs = 37309
B
w11067
186551 >= 25*xabs
25*xabs = 186551
A
w11068
186558 >= 25*xabs
25*xabs = 186558
B
w11069
186563 >= 25*xabs
25*xabs = 186563
A
w11070
37314 >= 5*xabs
5*xabs = 37314
B
w11071
7463 >= xabs
xabs = 7463
A
w11072
186582 >= 25*xabs
25*xabs = 186582
B
w11073
186587 >= 25*xabs
25*xabs = 186587
A
w11074
186594 >= 25*xabs
25*xabs = 186594
B

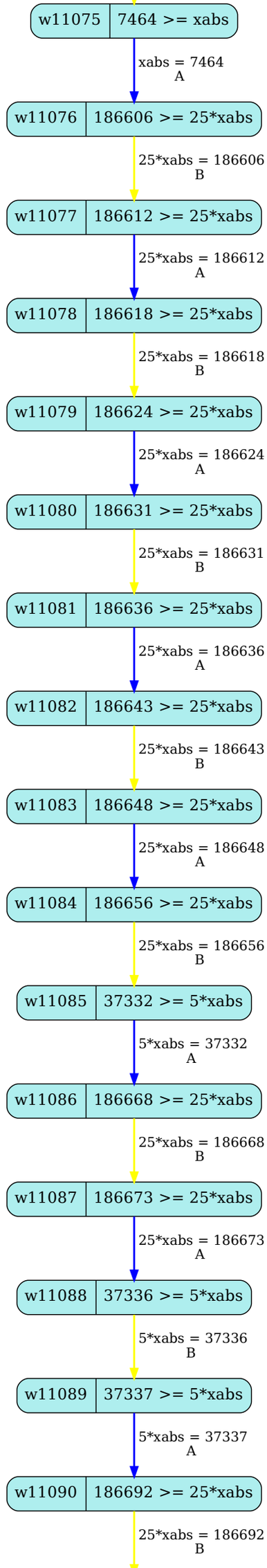
w11075
7464 >= xabs
xabs = 7464
A
w11076
186606 >= 25*xabs
25*xabs = 186606
B
w11077
186612 >= 25*xabs
25*xabs = 186612
A
w11078
186618 >= 25*xabs
25*xabs = 186618
B
w11079
186624 >= 25*xabs
25*xabs = 186624
A
w11080
186631 >= 25*xabs
25*xabs = 186631
B
w11081
186636 >= 25*xabs
25*xabs = 186636
A
w11082
186643 >= 25*xabs
25*xabs = 186643
B
w11083
186648 >= 25*xabs
25*xabs = 186648
A
w11084
186656 >= 25*xabs
25*xabs = 186656
B
w11085
37332 >= 5*xabs
5*xabs = 37332
A
w11086
186668 >= 25*xabs
25*xabs = 186668
B
w11087
186673 >= 25*xabs
25*xabs = 186673
A
w11088
37336 >= 5*xabs
5*xabs = 37336
B
w11089
37337 >= 5*xabs
5*xabs = 37337
A
w11090
186692 >= 25*xabs
25*xabs = 186692
B

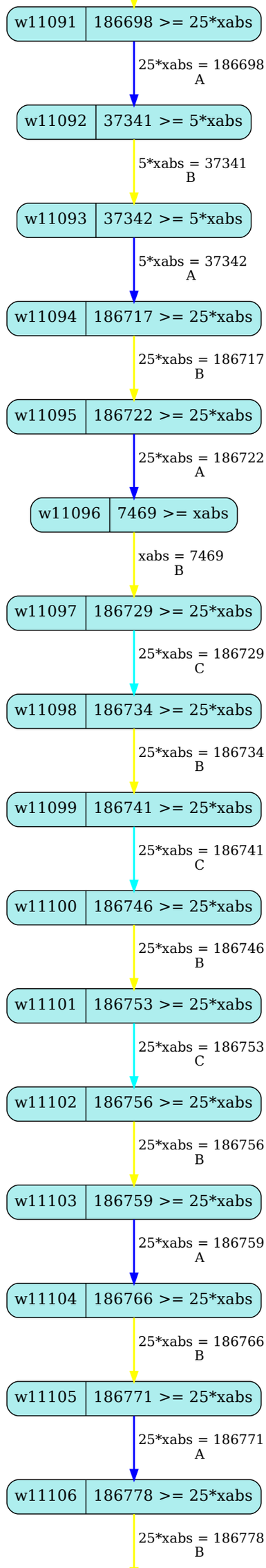
w11091
186698 >= 25*xabs
25*xabs = 186698
A
w11092
37341 >= 5*xabs
5*xabs = 37341
B
w11093
37342 >= 5*xabs
5*xabs = 37342
A
w11094
186717 >= 25*xabs
25*xabs = 186717
B
w11095
186722 >= 25*xabs
25*xabs = 186722
A
w11096
7469 >= xabs
xabs = 7469
B
w11097
186729 >= 25*xabs
25*xabs = 186729
C
w11098
186734 >= 25*xabs
25*xabs = 186734
B
w11099
186741 >= 25*xabs
25*xabs = 186741
C
w11100
186746 >= 25*xabs
25*xabs = 186746
B
w11101
186753 >= 25*xabs
25*xabs = 186753
C
w11102
186756 >= 25*xabs
25*xabs = 186756
B
w11103
186759 >= 25*xabs
25*xabs = 186759
A
w11104
186766 >= 25*xabs
25*xabs = 186766
B
w11105
186771 >= 25*xabs
25*xabs = 186771
A
w11106
186778 >= 25*xabs
25*xabs = 186778
B

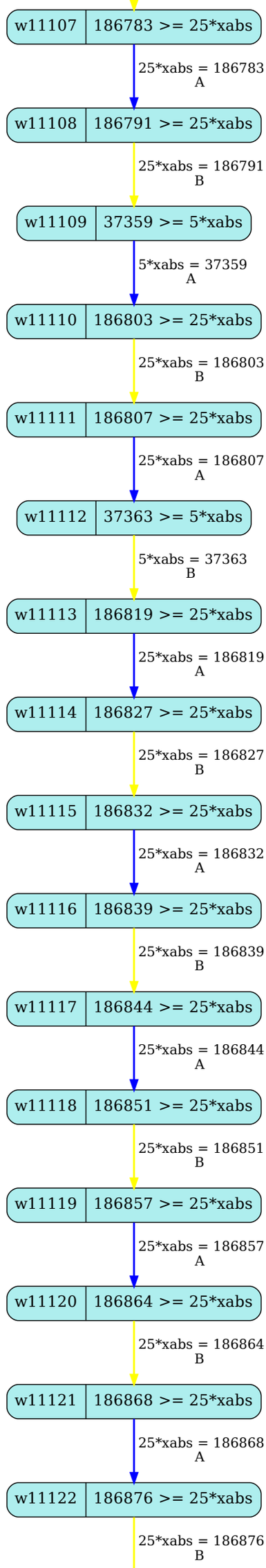
w11107
186783 >= 25*xabs
25*xabs = 186783
A
w11108
186791 >= 25*xabs
25*xabs = 186791
B
w11109
37359 >= 5*xabs
5*xabs = 37359
A
w11110
186803 >= 25*xabs
25*xabs = 186803
B
w11111
186807 >= 25*xabs
25*xabs = 186807
A
w11112
37363 >= 5*xabs
5*xabs = 37363
B
w11113
186819 >= 25*xabs
25*xabs = 186819
A
w11114
186827 >= 25*xabs
25*xabs = 186827
B
w11115
186832 >= 25*xabs
25*xabs = 186832
A
w11116
186839 >= 25*xabs
25*xabs = 186839
B
w11117
186844 >= 25*xabs
25*xabs = 186844
A
w11118
186851 >= 25*xabs
25*xabs = 186851
B
w11119
186857 >= 25*xabs
25*xabs = 186857
A
w11120
186864 >= 25*xabs
25*xabs = 186864
B
w11121
186868 >= 25*xabs
25*xabs = 186868
A
w11122
186876 >= 25*xabs
25*xabs = 186876
B

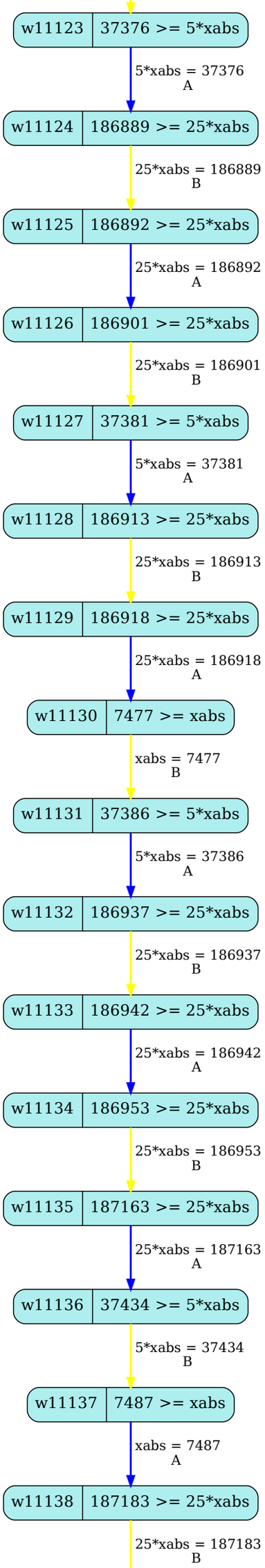
w11123
37376 >= 5*xabs
5*xabs = 37376
A
w11124
186889 >= 25*xabs
25*xabs = 186889
B
w11125
186892 >= 25*xabs
25*xabs = 186892
A
w11126
186901 >= 25*xabs
25*xabs = 186901
B
w11127
37381 >= 5*xabs
5*xabs = 37381
A
w11128
186913 >= 25*xabs
25*xabs = 186913
B
w11129
186918 >= 25*xabs
25*xabs = 186918
A
w11130
7477 >= xabs
xabs = 7477
B
w11131
37386 >= 5*xabs
5*xabs = 37386
A
w11132
186937 >= 25*xabs
25*xabs = 186937
B
w11133
186942 >= 25*xabs
25*xabs = 186942
A
w11134
186953 >= 25*xabs
25*xabs = 186953
B
w11135
187163 >= 25*xabs
25*xabs = 187163
A
w11136
37434 >= 5*xabs
5*xabs = 37434
B
w11137
7487 >= xabs
xabs = 7487
A
w11138
187183 >= 25*xabs
25*xabs = 187183
B

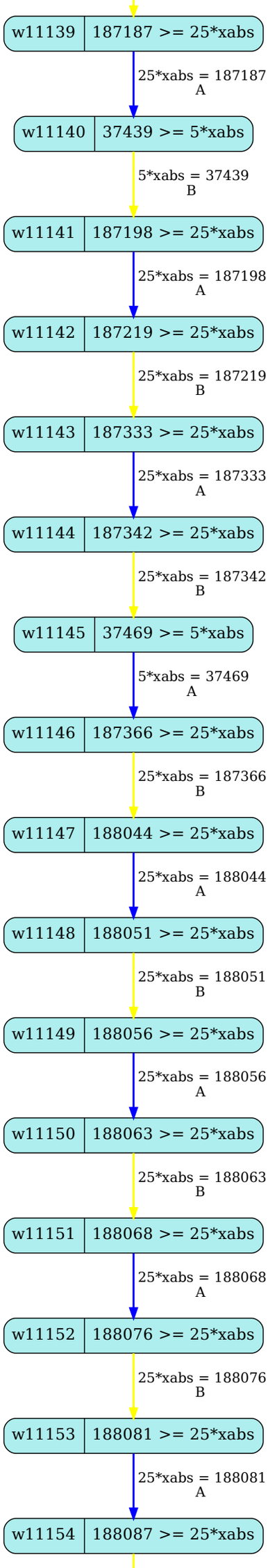
w11139
187187 >= 25*xabs
25*xabs = 187187
A
w11140
37439 >= 5*xabs
5*xabs = 37439
B
w11141
187198 >= 25*xabs
25*xabs = 187198
A
w11142
187219 >= 25*xabs
25*xabs = 187219
B
w11143
187333 >= 25*xabs
25*xabs = 187333
A
w11144
187342 >= 25*xabs
25*xabs = 187342
B
w11145
37469 >= 5*xabs
5*xabs = 37469
A
w11146
187366 >= 25*xabs
25*xabs = 187366
B
w11147
188044 >= 25*xabs
25*xabs = 188044
A
w11148
188051 >= 25*xabs
25*xabs = 188051
B
w11149
188056 >= 25*xabs
25*xabs = 188056
A
w11150
188063 >= 25*xabs
25*xabs = 188063
B
w11151
188068 >= 25*xabs
25*xabs = 188068
A
w11152
188076 >= 25*xabs
25*xabs = 188076
B
w11153
188081 >= 25*xabs
25*xabs = 188081
A
w11154
188087 >= 25*xabs

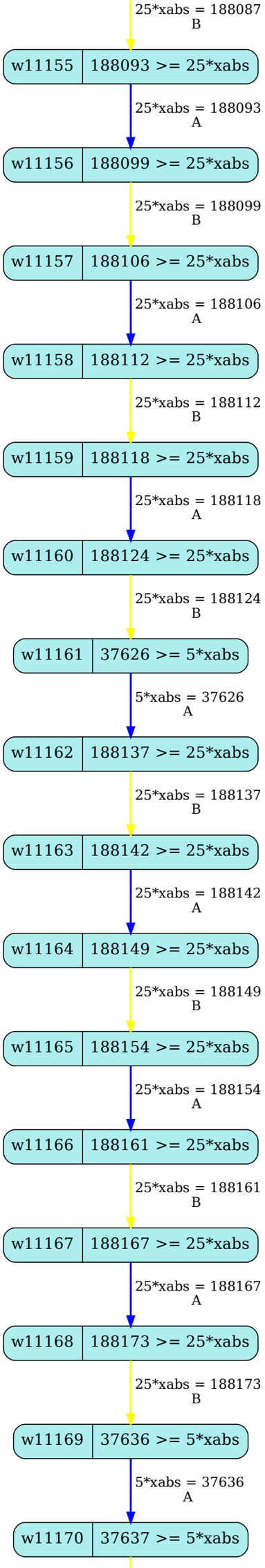
25*xabs = 188087
B
w11155
188093 >= 25*xabs
25*xabs = 188093
A
w11156
188099 >= 25*xabs
25*xabs = 188099
B
w11157
188106 >= 25*xabs
25*xabs = 188106
A
w11158
188112 >= 25*xabs
25*xabs = 188112
B
w11159
188118 >= 25*xabs
25*xabs = 188118
A
w11160
188124 >= 25*xabs
25*xabs = 188124
B
w11161
37626 >= 5*xabs
5*xabs = 37626
A
w11162
188137 >= 25*xabs
25*xabs = 188137
B
w11163
188142 >= 25*xabs
25*xabs = 188142
A
w11164
188149 >= 25*xabs
25*xabs = 188149
B
w11165
188154 >= 25*xabs
25*xabs = 188154
A
w11166
188161 >= 25*xabs
25*xabs = 188161
B
w11167
188167 >= 25*xabs
25*xabs = 188167
A
w11168
188173 >= 25*xabs
25*xabs = 188173
B
w11169
37636 >= 5*xabs
5*xabs = 37636
A
w11170
37637 >= 5*xabs

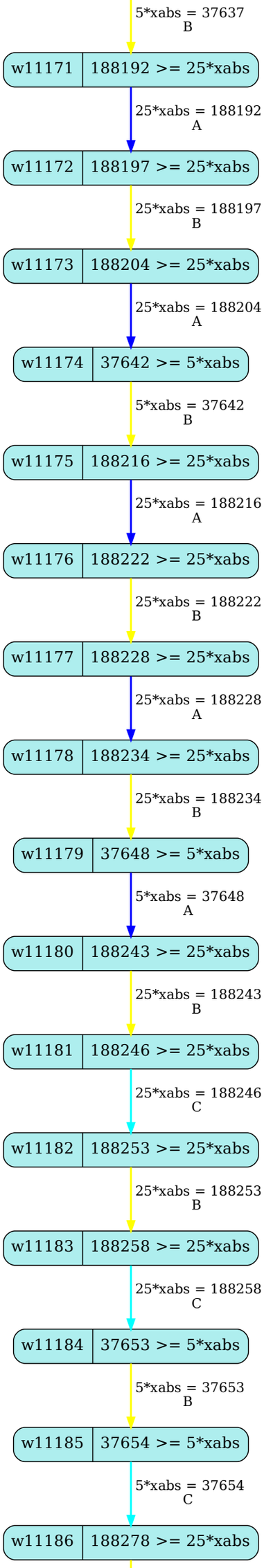
5*xabs = 37637
B
w11171
188192 >= 25*xabs
25*xabs = 188192
A
w11172
188197 >= 25*xabs
25*xabs = 188197
B
w11173
188204 >= 25*xabs
25*xabs = 188204
A
w11174
37642 >= 5*xabs
5*xabs = 37642
B
w11175
188216 >= 25*xabs
25*xabs = 188216
A
w11176
188222 >= 25*xabs
25*xabs = 188222
B
w11177
188228 >= 25*xabs
25*xabs = 188228
A
w11178
188234 >= 25*xabs
25*xabs = 188234
B
w11179
37648 >= 5*xabs
5*xabs = 37648
A
w11180
188243 >= 25*xabs
25*xabs = 188243
B
w11181
188246 >= 25*xabs
25*xabs = 188246
C
w11182
188253 >= 25*xabs
25*xabs = 188253
B
w11183
188258 >= 25*xabs
25*xabs = 188258
C
w11184
37653 >= 5*xabs
5*xabs = 37653
B
w11185
37654 >= 5*xabs
5*xabs = 37654
C
w11186
188278 >= 25*xabs

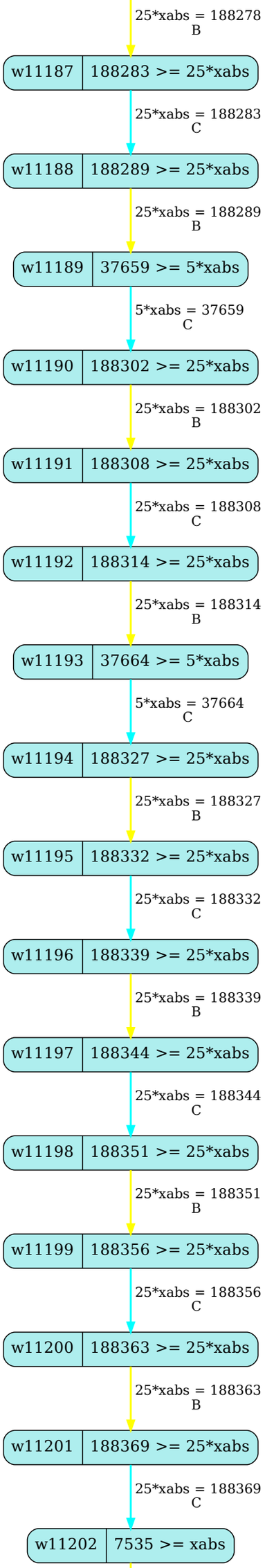
25*xabs = 188278
B
w11187
188283 >= 25*xabs
25*xabs = 188283
C
w11188
188289 >= 25*xabs
25*xabs = 188289
B
w11189
37659 >= 5*xabs
5*xabs = 37659
C
w11190
188302 >= 25*xabs
25*xabs = 188302
B
w11191
188308 >= 25*xabs
25*xabs = 188308
C
w11192
188314 >= 25*xabs
25*xabs = 188314
B
w11193
37664 >= 5*xabs
5*xabs = 37664
C
w11194
188327 >= 25*xabs
25*xabs = 188327
B
w11195
188332 >= 25*xabs
25*xabs = 188332
C
w11196
188339 >= 25*xabs
25*xabs = 188339
B
w11197
188344 >= 25*xabs
25*xabs = 188344
C
w11198
188351 >= 25*xabs
25*xabs = 188351
B
w11199
188356 >= 25*xabs
25*xabs = 188356
C
w11200
188363 >= 25*xabs
25*xabs = 188363
B
w11201
188369 >= 25*xabs
25*xabs = 188369
C
w11202
7535 >= xabs

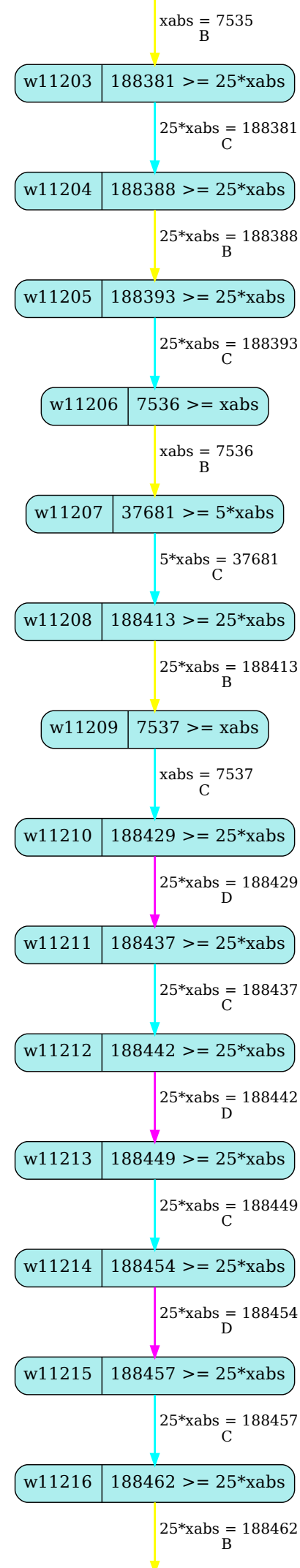
xabs = 7535
B
w11203
188381 >= 25*xabs
25*xabs = 188381
C
w11204
188388 >= 25*xabs
25*xabs = 188388
B
w11205
188393 >= 25*xabs
25*xabs = 188393
C
w11206
7536 >= xabs
xabs = 7536
B
w11207
37681 >= 5*xabs
5*xabs = 37681
C
w11208
188413 >= 25*xabs
25*xabs = 188413
B
w11209
7537 >= xabs
xabs = 7537
C
w11210
188429 >= 25*xabs
25*xabs = 188429
D
w11211
188437 >= 25*xabs
25*xabs = 188437
C
w11212
188442 >= 25*xabs
25*xabs = 188442
D
w11213
188449 >= 25*xabs
25*xabs = 188449
C
w11214
188454 >= 25*xabs
25*xabs = 188454
D
w11215
188457 >= 25*xabs
25*xabs = 188457
C
w11216
188462 >= 25*xabs
25*xabs = 188462
B

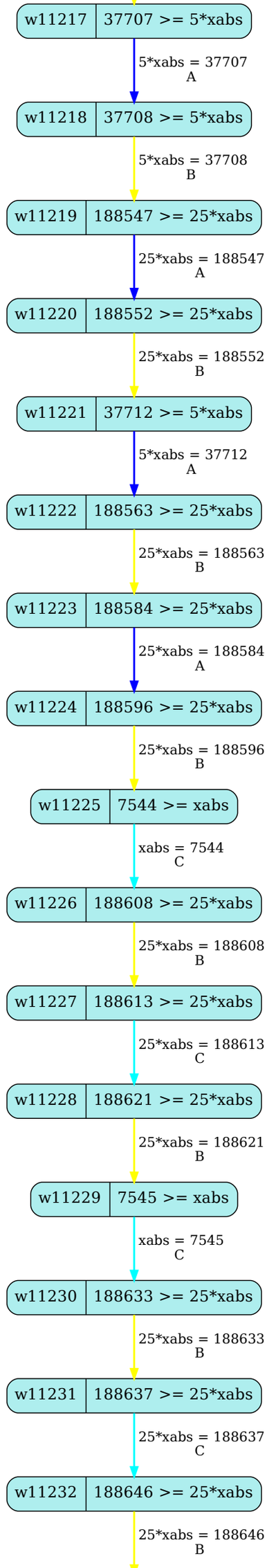
w11217
37707 >= 5*xabs
5*xabs = 37707
A
w11218
37708 >= 5*xabs
5*xabs = 37708
B
w11219
188547 >= 25*xabs
25*xabs = 188547
A
w11220
188552 >= 25*xabs
25*xabs = 188552
B
w11221
37712 >= 5*xabs
5*xabs = 37712
A
w11222
188563 >= 25*xabs
25*xabs = 188563
B
w11223
188584 >= 25*xabs
25*xabs = 188584
A
w11224
188596 >= 25*xabs
25*xabs = 188596
B
w11225
7544 >= xabs
xabs = 7544
C
w11226
188608 >= 25*xabs
25*xabs = 188608
B
w11227
188613 >= 25*xabs
25*xabs = 188613
C
w11228
188621 >= 25*xabs
25*xabs = 188621
B
w11229
7545 >= xabs
xabs = 7545
C
w11230
188633 >= 25*xabs
25*xabs = 188633
B
w11231
188637 >= 25*xabs
25*xabs = 188637
C
w11232
188646 >= 25*xabs
25*xabs = 188646
B

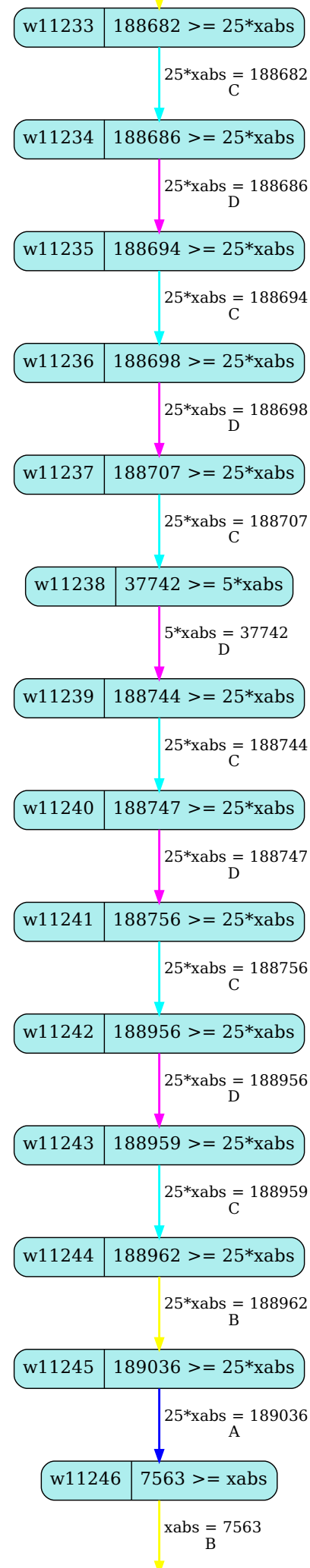
w11233
188682 >= 25*xabs
25*xabs = 188682
C
w11234
188686 >= 25*xabs
25*xabs = 188686
D
w11235
188694 >= 25*xabs
25*xabs = 188694
C
w11236
188698 >= 25*xabs
25*xabs = 188698
D
w11237
188707 >= 25*xabs
25*xabs = 188707
C
w11238
37742 >= 5*xabs
5*xabs = 37742
D
w11239
188744 >= 25*xabs
25*xabs = 188744
C
w11240
188747 >= 25*xabs
25*xabs = 188747
D
w11241
188756 >= 25*xabs
25*xabs = 188756
C
w11242
188956 >= 25*xabs
25*xabs = 188956
D
w11243
188959 >= 25*xabs
25*xabs = 188959
C
w11244
188962 >= 25*xabs
25*xabs = 188962
B
w11245
189036 >= 25*xabs
25*xabs = 189036
A
w11246
7563 >= xabs
xabs = 7563
B

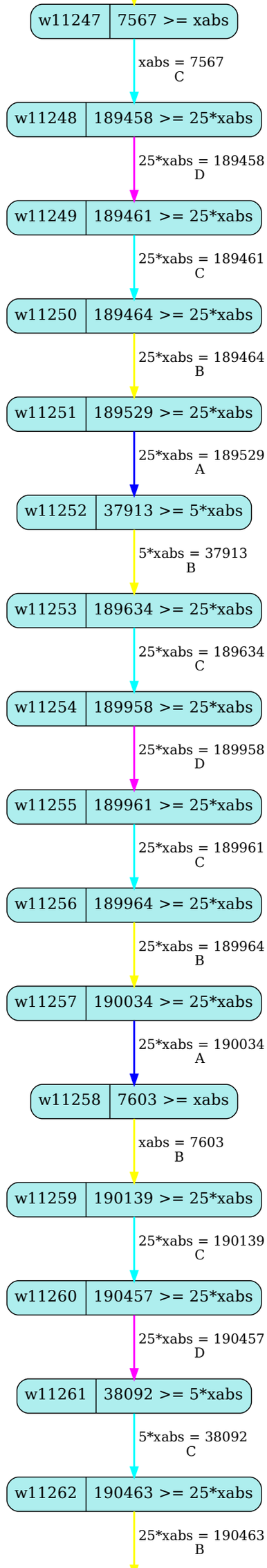
w11247
7567 >= xabs
xabs = 7567
C
w11248
189458 >= 25*xabs
25*xabs = 189458
D
w11249
189461 >= 25*xabs
25*xabs = 189461
C
w11250
189464 >= 25*xabs
25*xabs = 189464
B
w11251
189529 >= 25*xabs
25*xabs = 189529
A
w11252
37913 >= 5*xabs
5*xabs = 37913
B
w11253
189634 >= 25*xabs
25*xabs = 189634
C
w11254
189958 >= 25*xabs
25*xabs = 189958
D
w11255
189961 >= 25*xabs
25*xabs = 189961
C
w11256
189964 >= 25*xabs
25*xabs = 189964
B
w11257
190034 >= 25*xabs
25*xabs = 190034
A
w11258
7603 >= xabs
xabs = 7603
B
w11259
190139 >= 25*xabs
25*xabs = 190139
C
w11260
190457 >= 25*xabs
25*xabs = 190457
D
w11261
38092 >= 5*xabs
5*xabs = 38092
C
w11262
190463 >= 25*xabs
25*xabs = 190463
B

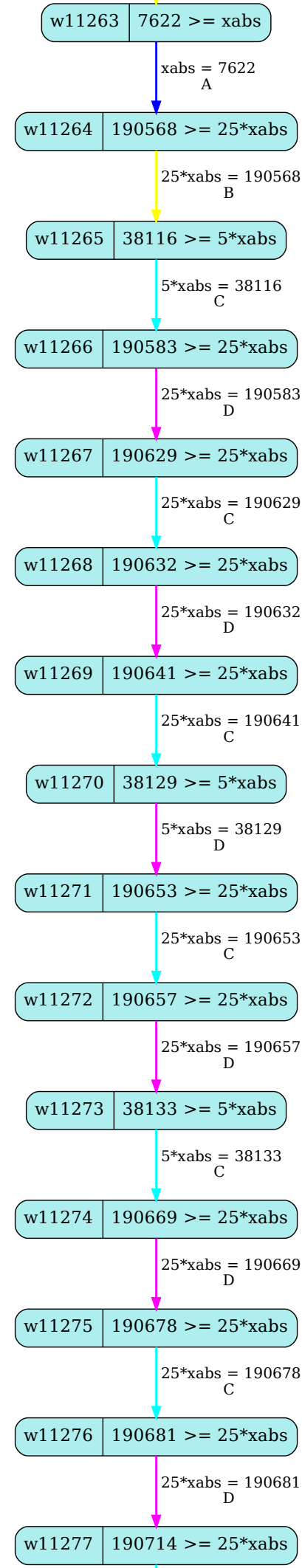
w11263
7622 >= xabs
xabs = 7622
A
w11264
190568 >= 25*xabs
25*xabs = 190568
B
w11265
38116 >= 5*xabs
5*xabs = 38116
C
w11266
190583 >= 25*xabs
25*xabs = 190583
D
w11267
190629 >= 25*xabs
25*xabs = 190629
C
w11268
190632 >= 25*xabs
25*xabs = 190632
D
w11269
190641 >= 25*xabs
25*xabs = 190641
C
w11270
38129 >= 5*xabs
5*xabs = 38129
D
w11271
190653 >= 25*xabs
25*xabs = 190653
C
w11272
190657 >= 25*xabs
25*xabs = 190657
D
w11273
38133 >= 5*xabs
5*xabs = 38133
C
w11274
190669 >= 25*xabs
25*xabs = 190669
D
w11275
190678 >= 25*xabs
25*xabs = 190678
C
w11276
190681 >= 25*xabs
25*xabs = 190681
D
w11277
190714 >= 25*xabs

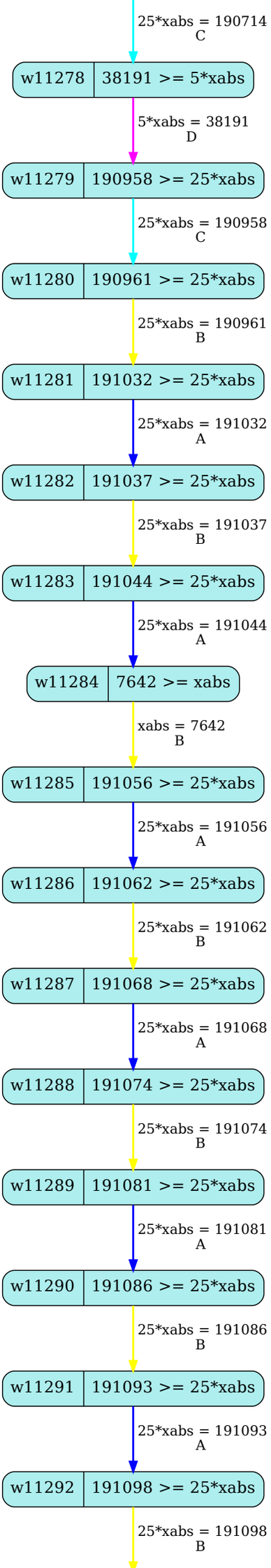
25*xabs = 190714
C
w11278
38191 >= 5*xabs
5*xabs = 38191
D
w11279
190958 >= 25*xabs
25*xabs = 190958
C
w11280
190961 >= 25*xabs
25*xabs = 190961
B
w11281
191032 >= 25*xabs
25*xabs = 191032
A
w11282
191037 >= 25*xabs
25*xabs = 191037
B
w11283
191044 >= 25*xabs
25*xabs = 191044
A
w11284
7642 >= xabs
xabs = 7642
B
w11285
191056 >= 25*xabs
25*xabs = 191056
A
w11286
191062 >= 25*xabs
25*xabs = 191062
B
w11287
191068 >= 25*xabs
25*xabs = 191068
A
w11288
191074 >= 25*xabs
25*xabs = 191074
B
w11289
191081 >= 25*xabs
25*xabs = 191081
A
w11290
191086 >= 25*xabs
25*xabs = 191086
B
w11291
191093 >= 25*xabs
25*xabs = 191093
A
w11292
191098 >= 25*xabs
25*xabs = 191098
B

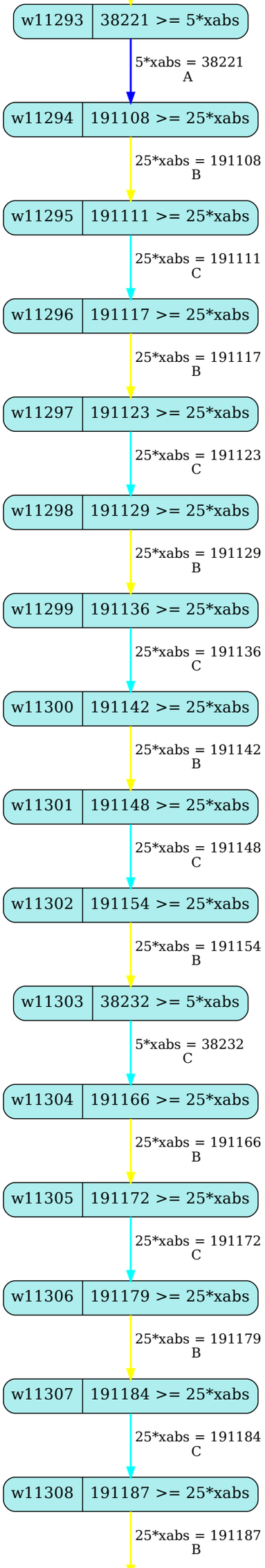
w11293
38221 >= 5*xabs
5*xabs = 38221
A
w11294
191108 >= 25*xabs
25*xabs = 191108
B
w11295
191111 >= 25*xabs
25*xabs = 191111
C
w11296
191117 >= 25*xabs
25*xabs = 191117
B
w11297
191123 >= 25*xabs
25*xabs = 191123
C
w11298
191129 >= 25*xabs
25*xabs = 191129
B
w11299
191136 >= 25*xabs
25*xabs = 191136
C
w11300
191142 >= 25*xabs
25*xabs = 191142
B
w11301
191148 >= 25*xabs
25*xabs = 191148
C
w11302
191154 >= 25*xabs
25*xabs = 191154
B
w11303
38232 >= 5*xabs
5*xabs = 38232
C
w11304
191166 >= 25*xabs
25*xabs = 191166
B
w11305
191172 >= 25*xabs
25*xabs = 191172
C
w11306
191179 >= 25*xabs
25*xabs = 191179
B
w11307
191184 >= 25*xabs
25*xabs = 191184
C
w11308
191187 >= 25*xabs
25*xabs = 191187
B

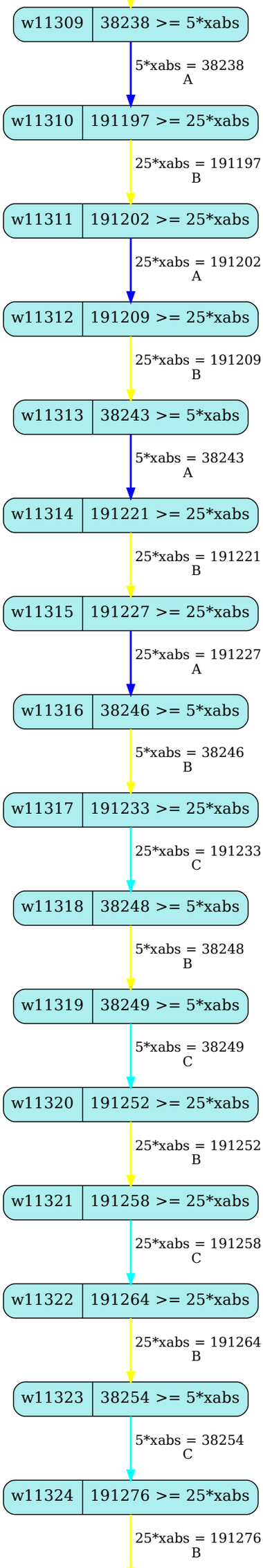
w11309
38238 >= 5*xabs
5*xabs = 38238
A
w11310
191197 >= 25*xabs
25*xabs = 191197
B
w11311
191202 >= 25*xabs
25*xabs = 191202
A
w11312
191209 >= 25*xabs
25*xabs = 191209
B
w11313
38243 >= 5*xabs
5*xabs = 38243
A
w11314
191221 >= 25*xabs
25*xabs = 191221
B
w11315
191227 >= 25*xabs
25*xabs = 191227
A
w11316
38246 >= 5*xabs
5*xabs = 38246
B
w11317
191233 >= 25*xabs
25*xabs = 191233
C
w11318
38248 >= 5*xabs
5*xabs = 38248
B
w11319
38249 >= 5*xabs
5*xabs = 38249
C
w11320
191252 >= 25*xabs
25*xabs = 191252
B
w11321
191258 >= 25*xabs
25*xabs = 191258
C
w11322
191264 >= 25*xabs
25*xabs = 191264
B
w11323
38254 >= 5*xabs
5*xabs = 38254
C
w11324
191276 >= 25*xabs
25*xabs = 191276
B

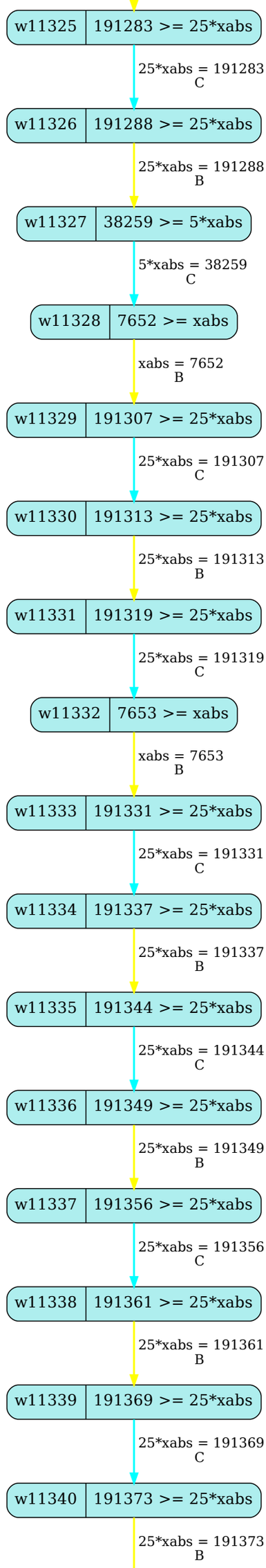
w11325
191283 >= 25*xabs
25*xabs = 191283
C
w11326
191288 >= 25*xabs
25*xabs = 191288
B
w11327
38259 >= 5*xabs
5*xabs = 38259
C
w11328
7652 >= xabs
xabs = 7652
B
w11329
191307 >= 25*xabs
25*xabs = 191307
C
w11330
191313 >= 25*xabs
25*xabs = 191313
B
w11331
191319 >= 25*xabs
25*xabs = 191319
C
w11332
7653 >= xabs
xabs = 7653
B
w11333
191331 >= 25*xabs
25*xabs = 191331
C
w11334
191337 >= 25*xabs
25*xabs = 191337
B
w11335
191344 >= 25*xabs
25*xabs = 191344
C
w11336
191349 >= 25*xabs
25*xabs = 191349
B
w11337
191356 >= 25*xabs
25*xabs = 191356
C
w11338
191361 >= 25*xabs
25*xabs = 191361
B
w11339
191369 >= 25*xabs
25*xabs = 191369
C
w11340
191373 >= 25*xabs
25*xabs = 191373
B

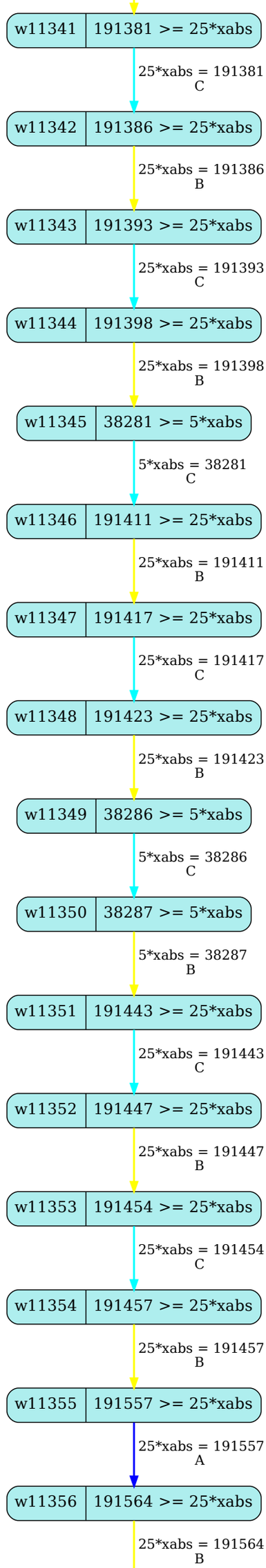
w11341
191381 >= 25*xabs
25*xabs = 191381
C
w11342
191386 >= 25*xabs
25*xabs = 191386
B
w11343
191393 >= 25*xabs
25*xabs = 191393
C
w11344
191398 >= 25*xabs
25*xabs = 191398
B
w11345
38281 >= 5*xabs
5*xabs = 38281
C
w11346
191411 >= 25*xabs
25*xabs = 191411
B
w11347
191417 >= 25*xabs
25*xabs = 191417
C
w11348
191423 >= 25*xabs
25*xabs = 191423
B
w11349
38286 >= 5*xabs
5*xabs = 38286
C
w11350
38287 >= 5*xabs
5*xabs = 38287
B
w11351
191443 >= 25*xabs
25*xabs = 191443
C
w11352
191447 >= 25*xabs
25*xabs = 191447
B
w11353
191454 >= 25*xabs
25*xabs = 191454
C
w11354
191457 >= 25*xabs
25*xabs = 191457
B
w11355
191557 >= 25*xabs
25*xabs = 191557
A
w11356
191564 >= 25*xabs
25*xabs = 191564
B

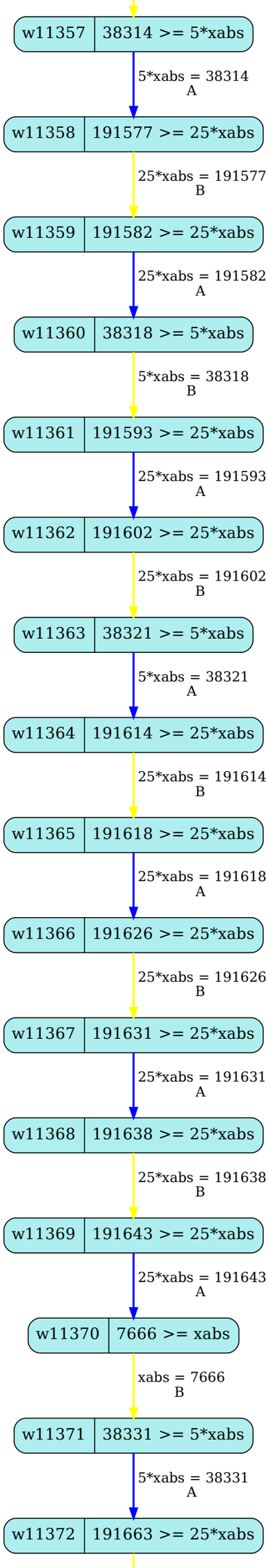
w11357
38314 >= 5*xabs
5*xabs = 38314
A
w11358
191577 >= 25*xabs
25*xabs = 191577
B
w11359
191582 >= 25*xabs
25*xabs = 191582
A
w11360
38318 >= 5*xabs
5*xabs = 38318
B
w11361
191593 >= 25*xabs
25*xabs = 191593
A
w11362
191602 >= 25*xabs
25*xabs = 191602
B
w11363
38321 >= 5*xabs
5*xabs = 38321
A
w11364
191614 >= 25*xabs
25*xabs = 191614
B
w11365
191618 >= 25*xabs
25*xabs = 191618
A
w11366
191626 >= 25*xabs
25*xabs = 191626
B
w11367
191631 >= 25*xabs
25*xabs = 191631
A
w11368
191638 >= 25*xabs
25*xabs = 191638
B
w11369
191643 >= 25*xabs
25*xabs = 191643
A
w11370
7666 >= xabs
xabs = 7666
B
w11371
38331 >= 5*xabs
5*xabs = 38331
A
w11372
191663 >= 25*xabs

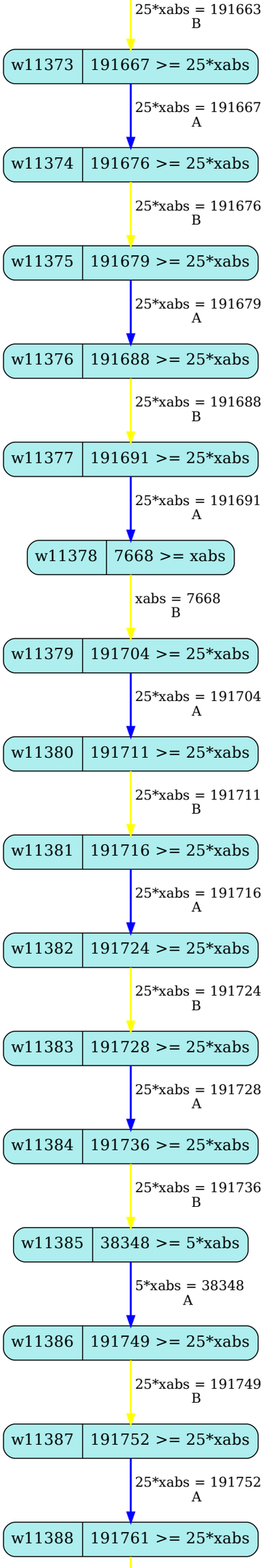
25*xabs = 191663
B
w11373
191667 >= 25*xabs
25*xabs = 191667
A
w11374
191676 >= 25*xabs
25*xabs = 191676
B
w11375
191679 >= 25*xabs
25*xabs = 191679
A
w11376
191688 >= 25*xabs
25*xabs = 191688
B
w11377
191691 >= 25*xabs
25*xabs = 191691
A
w11378
7668 >= xabs
xabs = 7668
B
w11379
191704 >= 25*xabs
25*xabs = 191704
A
w11380
191711 >= 25*xabs
25*xabs = 191711
B
w11381
191716 >= 25*xabs
25*xabs = 191716
A
w11382
191724 >= 25*xabs
25*xabs = 191724
B
w11383
191728 >= 25*xabs
25*xabs = 191728
A
w11384
191736 >= 25*xabs
25*xabs = 191736
B
w11385
38348 >= 5*xabs
5*xabs = 38348
A
w11386
191749 >= 25*xabs
25*xabs = 191749
B
w11387
191752 >= 25*xabs
25*xabs = 191752
A
w11388
191761 >= 25*xabs

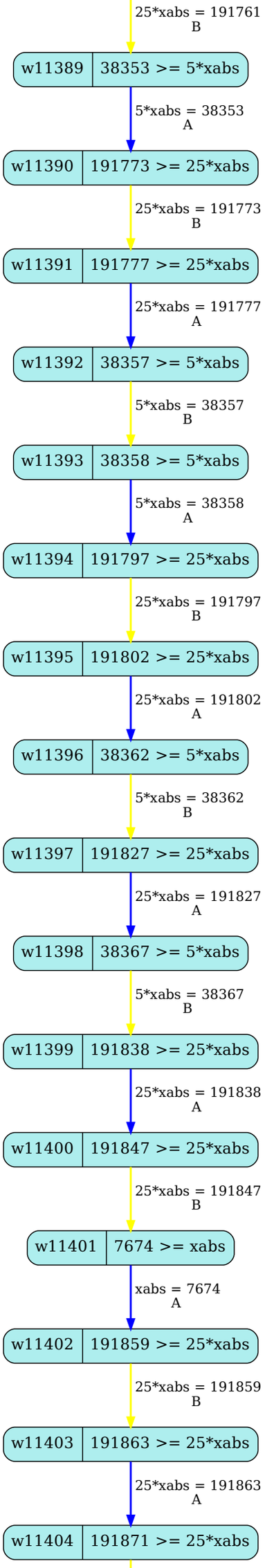
25*xabs = 191761
B
w11389
38353 >= 5*xabs
5*xabs = 38353
A
w11390
191773 >= 25*xabs
25*xabs = 191773
B
w11391
191777 >= 25*xabs
25*xabs = 191777
A
w11392
38357 >= 5*xabs
5*xabs = 38357
B
w11393
38358 >= 5*xabs
5*xabs = 38358
A
w11394
191797 >= 25*xabs
25*xabs = 191797
B
w11395
191802 >= 25*xabs
25*xabs = 191802
A
w11396
38362 >= 5*xabs
5*xabs = 38362
B
w11397
191827 >= 25*xabs
25*xabs = 191827
A
w11398
38367 >= 5*xabs
5*xabs = 38367
B
w11399
191838 >= 25*xabs
25*xabs = 191838
A
w11400
191847 >= 25*xabs
25*xabs = 191847
B
w11401
7674 >= xabs
xabs = 7674
A
w11402
191859 >= 25*xabs
25*xabs = 191859
B
w11403
191863 >= 25*xabs
25*xabs = 191863
A
w11404
191871 >= 25*xabs

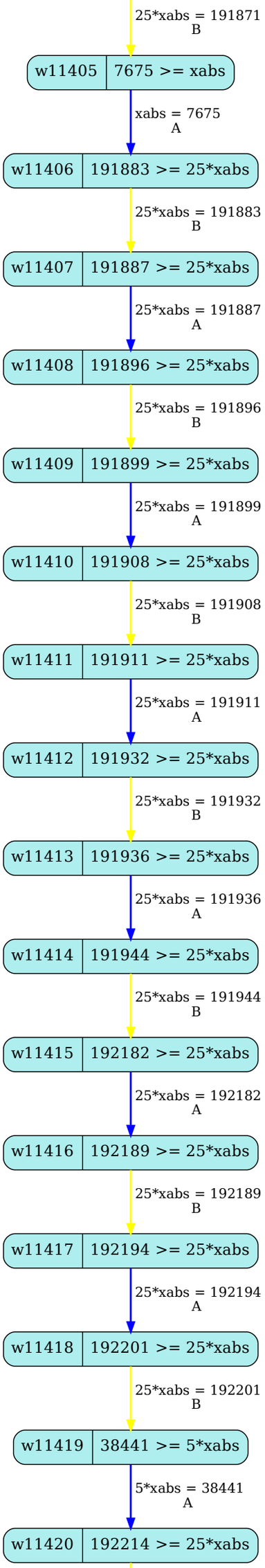
25*xabs = 191871
B
w11405
7675 >= xabs
xabs = 7675
A
w11406
191883 >= 25*xabs
25*xabs = 191883
B
w11407
191887 >= 25*xabs
25*xabs = 191887
A
w11408
191896 >= 25*xabs
25*xabs = 191896
B
w11409
191899 >= 25*xabs
25*xabs = 191899
A
w11410
191908 >= 25*xabs
25*xabs = 191908
B
w11411
191911 >= 25*xabs
25*xabs = 191911
A
w11412
191932 >= 25*xabs
25*xabs = 191932
B
w11413
191936 >= 25*xabs
25*xabs = 191936
A
w11414
191944 >= 25*xabs
25*xabs = 191944
B
w11415
192182 >= 25*xabs
25*xabs = 192182
A
w11416
192189 >= 25*xabs
25*xabs = 192189
B
w11417
192194 >= 25*xabs
25*xabs = 192194
A
w11418
192201 >= 25*xabs
25*xabs = 192201
B
w11419
38441 >= 5*xabs
5*xabs = 38441
A
w11420
192214 >= 25*xabs

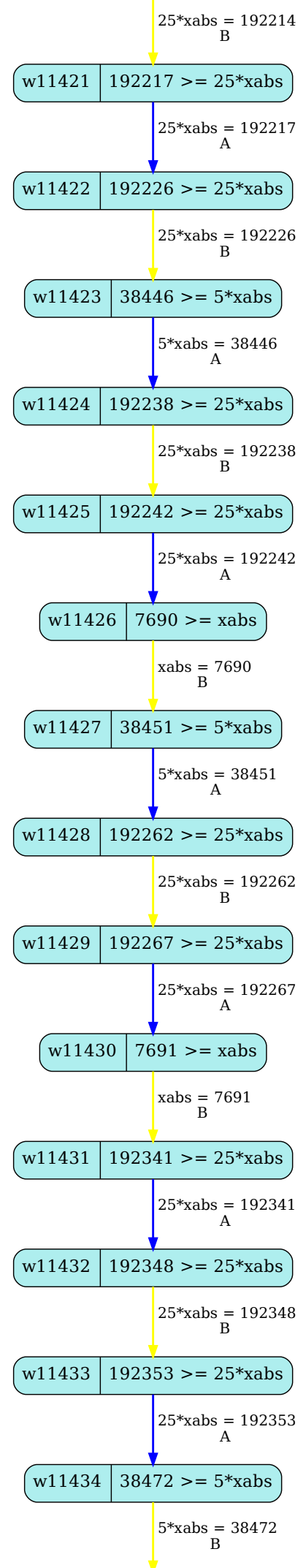
25*xabs = 192214
B
w11421
192217 >= 25*xabs
25*xabs = 192217
A
w11422
192226 >= 25*xabs
25*xabs = 192226
B
w11423
38446 >= 5*xabs
5*xabs = 38446
A
w11424
192238 >= 25*xabs
25*xabs = 192238
B
w11425
192242 >= 25*xabs
25*xabs = 192242
A
w11426
7690 >= xabs
xabs = 7690
B
w11427
38451 >= 5*xabs
5*xabs = 38451
A
w11428
192262 >= 25*xabs
25*xabs = 192262
B
w11429
192267 >= 25*xabs
25*xabs = 192267
A
w11430
7691 >= xabs
xabs = 7691
B
w11431
192341 >= 25*xabs
25*xabs = 192341
A
w11432
192348 >= 25*xabs
25*xabs = 192348
B
w11433
192353 >= 25*xabs
25*xabs = 192353
A
w11434
38472 >= 5*xabs
5*xabs = 38472
B

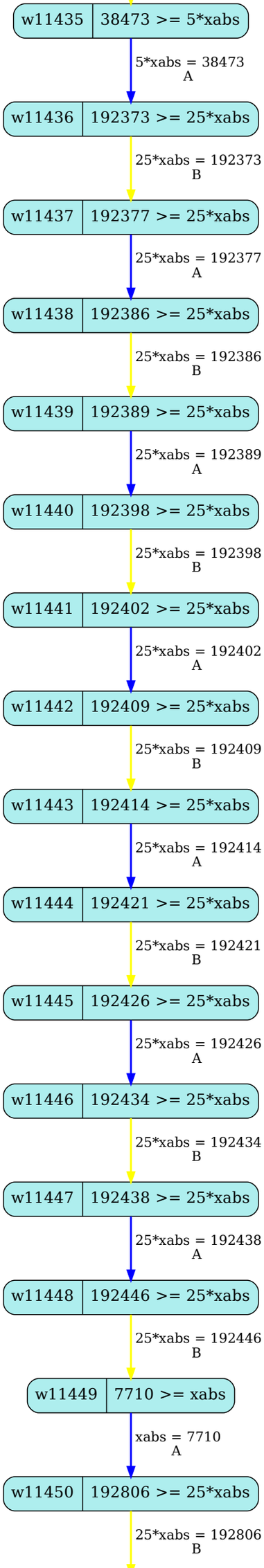
w11435
38473 >= 5*xabs
5*xabs = 38473
A
w11436
192373 >= 25*xabs
25*xabs = 192373
B
w11437
192377 >= 25*xabs
25*xabs = 192377
A
w11438
192386 >= 25*xabs
25*xabs = 192386
B
w11439
192389 >= 25*xabs
25*xabs = 192389
A
w11440
192398 >= 25*xabs
25*xabs = 192398
B
w11441
192402 >= 25*xabs
25*xabs = 192402
A
w11442
192409 >= 25*xabs
25*xabs = 192409
B
w11443
192414 >= 25*xabs
25*xabs = 192414
A
w11444
192421 >= 25*xabs
25*xabs = 192421
B
w11445
192426 >= 25*xabs
25*xabs = 192426
A
w11446
192434 >= 25*xabs
25*xabs = 192434
B
w11447
192438 >= 25*xabs
25*xabs = 192438
A
w11448
192446 >= 25*xabs
25*xabs = 192446
B
w11449
7710 >= xabs
xabs = 7710
A
w11450
192806 >= 25*xabs
25*xabs = 192806
B

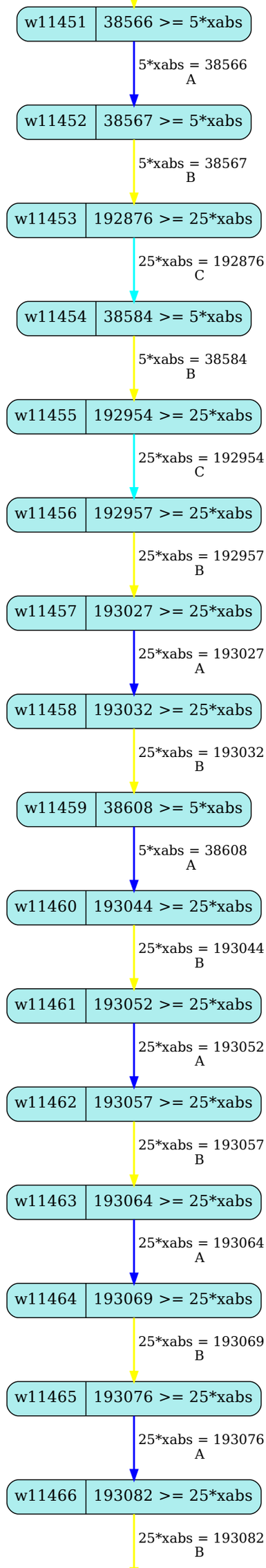
w11451
38566 >= 5*xabs
5*xabs = 38566
A
w11452
38567 >= 5*xabs
5*xabs = 38567
B
w11453
192876 >= 25*xabs
25*xabs = 192876
C
w11454
38584 >= 5*xabs
5*xabs = 38584
B
w11455
192954 >= 25*xabs
25*xabs = 192954
C
w11456
192957 >= 25*xabs
25*xabs = 192957
B
w11457
193027 >= 25*xabs
25*xabs = 193027
A
w11458
193032 >= 25*xabs
25*xabs = 193032
B
w11459
38608 >= 5*xabs
5*xabs = 38608
A
w11460
193044 >= 25*xabs
25*xabs = 193044
B
w11461
193052 >= 25*xabs
25*xabs = 193052
A
w11462
193057 >= 25*xabs
25*xabs = 193057
B
w11463
193064 >= 25*xabs
25*xabs = 193064
A
w11464
193069 >= 25*xabs
25*xabs = 193069
B
w11465
193076 >= 25*xabs
25*xabs = 193076
A
w11466
193082 >= 25*xabs
25*xabs = 193082
B

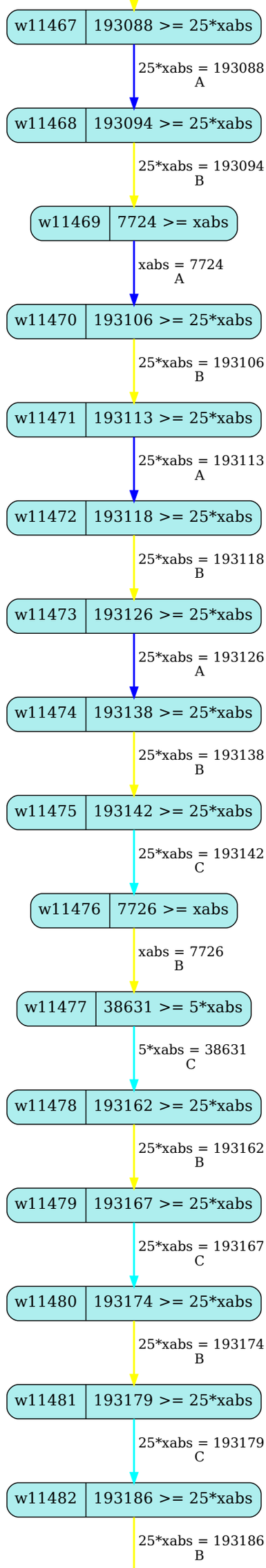
w11467
193088 >= 25*xabs
25*xabs = 193088
A
w11468
193094 >= 25*xabs
25*xabs = 193094
B
w11469
7724 >= xabs
xabs = 7724
A
w11470
193106 >= 25*xabs
25*xabs = 193106
B
w11471
193113 >= 25*xabs
25*xabs = 193113
A
w11472
193118 >= 25*xabs
25*xabs = 193118
B
w11473
193126 >= 25*xabs
25*xabs = 193126
A
w11474
193138 >= 25*xabs
25*xabs = 193138
B
w11475
193142 >= 25*xabs
25*xabs = 193142
C
w11476
7726 >= xabs
xabs = 7726
B
w11477
38631 >= 5*xabs
5*xabs = 38631
C
w11478
193162 >= 25*xabs
25*xabs = 193162
B
w11479
193167 >= 25*xabs
25*xabs = 193167
C
w11480
193174 >= 25*xabs
25*xabs = 193174
B
w11481
193179 >= 25*xabs
25*xabs = 193179
C
w11482
193186 >= 25*xabs
25*xabs = 193186
B

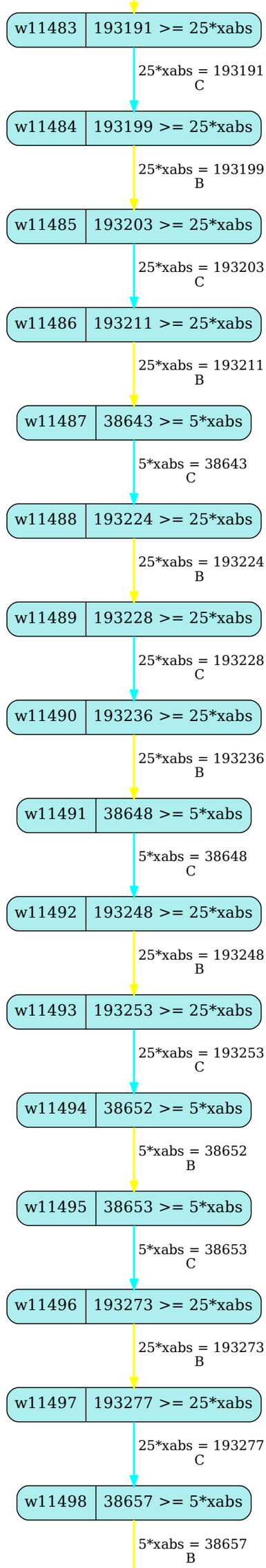
w11483
193191 >= 25*xabs
25*xabs = 193191
C
w11484
193199 >= 25*xabs
25*xabs = 193199
B
w11485
193203 >= 25*xabs
25*xabs = 193203
C
w11486
193211 >= 25*xabs
25*xabs = 193211
B
w11487
38643 >= 5*xabs
5*xabs = 38643
C
w11488
193224 >= 25*xabs
25*xabs = 193224
B
w11489
193228 >= 25*xabs
25*xabs = 193228
C
w11490
193236 >= 25*xabs
25*xabs = 193236
B
w11491
38648 >= 5*xabs
5*xabs = 38648
C
w11492
193248 >= 25*xabs
25*xabs = 193248
B
w11493
193253 >= 25*xabs
25*xabs = 193253
C
w11494
38652 >= 5*xabs
5*xabs = 38652
B
w11495
38653 >= 5*xabs
5*xabs = 38653
C
w11496
193273 >= 25*xabs
25*xabs = 193273
B
w11497
193277 >= 25*xabs
25*xabs = 193277
C
w11498
38657 >= 5*xabs
5*xabs = 38657
B

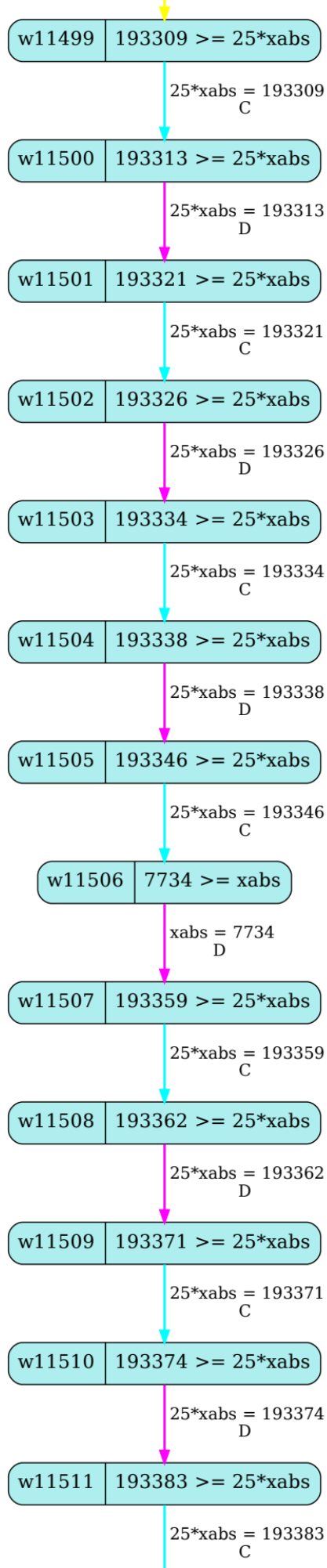
w11499
193309 >= 25*xabs
25*xabs = 193309
C
w11500
193313 >= 25*xabs
25*xabs = 193313
D
w11501
193321 >= 25*xabs
25*xabs = 193321
C
w11502
193326 >= 25*xabs
25*xabs = 193326
D
w11503
193334 >= 25*xabs
25*xabs = 193334
C
w11504
193338 >= 25*xabs
25*xabs = 193338
D
w11505
193346 >= 25*xabs
25*xabs = 193346
C
w11506
7734 >= xabs
xabs = 7734
D
w11507
193359 >= 25*xabs
25*xabs = 193359
C
w11508
193362 >= 25*xabs
25*xabs = 193362
D
w11509
193371 >= 25*xabs
25*xabs = 193371
C
w11510
193374 >= 25*xabs
25*xabs = 193374
D
w11511
193383 >= 25*xabs
25*xabs = 193383
C

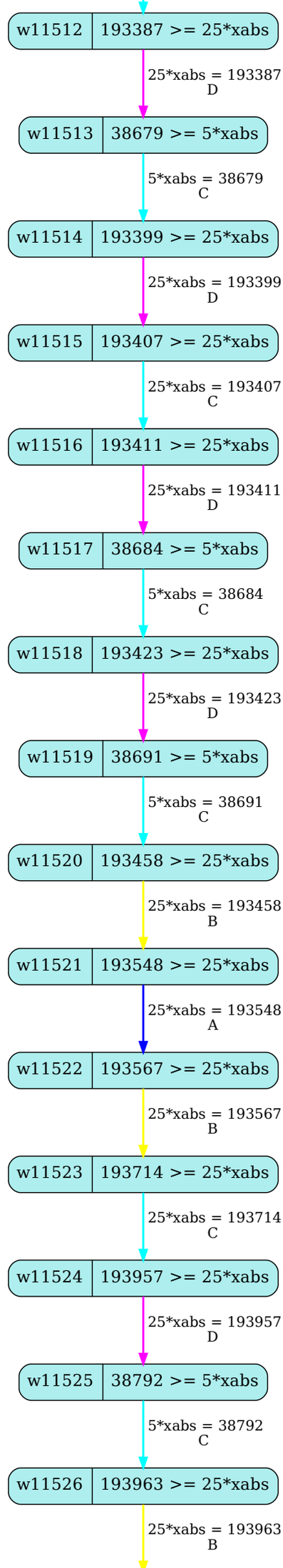
w11512
193387 >= 25*xabs
25*xabs = 193387
D
w11513
38679 >= 5*xabs
5*xabs = 38679
C
w11514
193399 >= 25*xabs
25*xabs = 193399
D
w11515
193407 >= 25*xabs
25*xabs = 193407
C
w11516
193411 >= 25*xabs
25*xabs = 193411
D
w11517
38684 >= 5*xabs
5*xabs = 38684
C
w11518
193423 >= 25*xabs
25*xabs = 193423
D
w11519
38691 >= 5*xabs
5*xabs = 38691
C
w11520
193458 >= 25*xabs
25*xabs = 193458
B
w11521
193548 >= 25*xabs
25*xabs = 193548
A
w11522
193567 >= 25*xabs
25*xabs = 193567
B
w11523
193714 >= 25*xabs
25*xabs = 193714
C
w11524
193957 >= 25*xabs
25*xabs = 193957
D
w11525
38792 >= 5*xabs
5*xabs = 38792
C
w11526
193963 >= 25*xabs
25*xabs = 193963
B

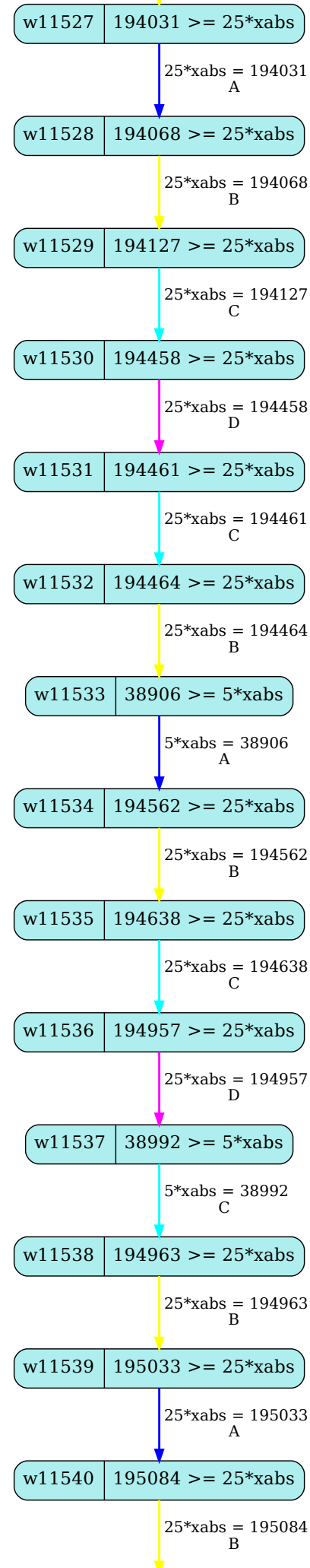
w11527
194031 >= 25*xabs
25*xabs = 194031
A
w11528
194068 >= 25*xabs
25*xabs = 194068
B
w11529
194127 >= 25*xabs
25*xabs = 194127
C
w11530
194458 >= 25*xabs
25*xabs = 194458
D
w11531
194461 >= 25*xabs
25*xabs = 194461
C
w11532
194464 >= 25*xabs
25*xabs = 194464
B
w11533
38906 >= 5*xabs
5*xabs = 38906
A
w11534
194562 >= 25*xabs
25*xabs = 194562
B
w11535
194638 >= 25*xabs
25*xabs = 194638
C
w11536
194957 >= 25*xabs
25*xabs = 194957
D
w11537
38992 >= 5*xabs
5*xabs = 38992
C
w11538
194963 >= 25*xabs
25*xabs = 194963
B
w11539
195033 >= 25*xabs
25*xabs = 195033
A
w11540
195084 >= 25*xabs
25*xabs = 195084
B

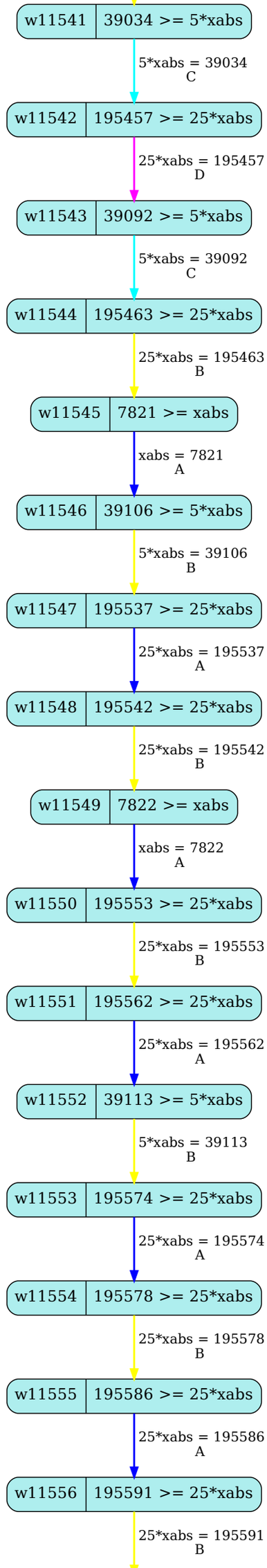
w11541
39034 >= 5*xabs
5*xabs = 39034
C
w11542
195457 >= 25*xabs
25*xabs = 195457
D
w11543
39092 >= 5*xabs
5*xabs = 39092
C
w11544
195463 >= 25*xabs
25*xabs = 195463
B
w11545
7821 >= xabs
xabs = 7821
A
w11546
39106 >= 5*xabs
5*xabs = 39106
B
w11547
195537 >= 25*xabs
25*xabs = 195537
A
w11548
195542 >= 25*xabs
25*xabs = 195542
B
w11549
7822 >= xabs
xabs = 7822
A
w11550
195553 >= 25*xabs
25*xabs = 195553
B
w11551
195562 >= 25*xabs
25*xabs = 195562
A
w11552
39113 >= 5*xabs
5*xabs = 39113
B
w11553
195574 >= 25*xabs
25*xabs = 195574
A
w11554
195578 >= 25*xabs
25*xabs = 195578
B
w11555
195586 >= 25*xabs
25*xabs = 195586
A
w11556
195591 >= 25*xabs
25*xabs = 195591
B

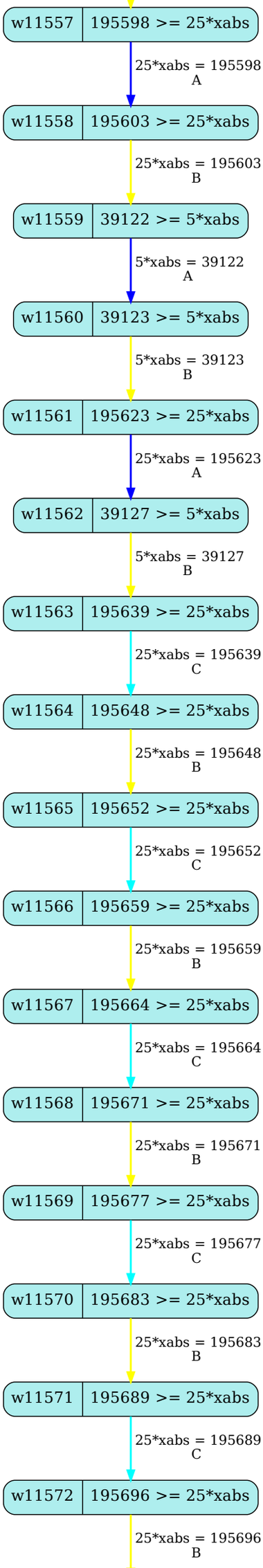
w11557
195598 >= 25*xabs
25*xabs = 195598
A
w11558
195603 >= 25*xabs
25*xabs = 195603
B
w11559
39122 >= 5*xabs
5*xabs = 39122
A
w11560
39123 >= 5*xabs
5*xabs = 39123
B
w11561
195623 >= 25*xabs
25*xabs = 195623
A
w11562
39127 >= 5*xabs
5*xabs = 39127
B
w11563
195639 >= 25*xabs
25*xabs = 195639
C
w11564
195648 >= 25*xabs
25*xabs = 195648
B
w11565
195652 >= 25*xabs
25*xabs = 195652
C
w11566
195659 >= 25*xabs
25*xabs = 195659
B
w11567
195664 >= 25*xabs
25*xabs = 195664
C
w11568
195671 >= 25*xabs
25*xabs = 195671
B
w11569
195677 >= 25*xabs
25*xabs = 195677
C
w11570
195683 >= 25*xabs
25*xabs = 195683
B
w11571
195689 >= 25*xabs
25*xabs = 195689
C
w11572
195696 >= 25*xabs
25*xabs = 195696
B

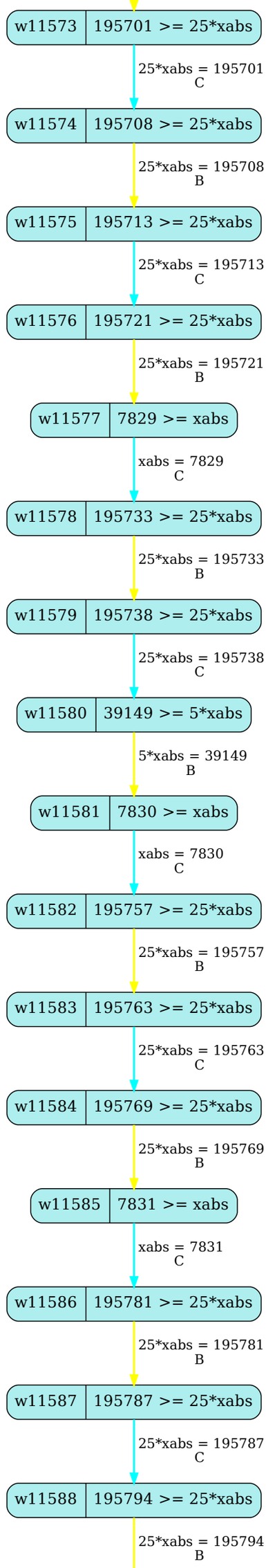
w11573
195701 >= 25*xabs
25*xabs = 195701
C
w11574
195708 >= 25*xabs
25*xabs = 195708
B
w11575
195713 >= 25*xabs
25*xabs = 195713
C
w11576
195721 >= 25*xabs
25*xabs = 195721
B
w11577
7829 >= xabs
xabs = 7829
C
w11578
195733 >= 25*xabs
25*xabs = 195733
B
w11579
195738 >= 25*xabs
25*xabs = 195738
C
w11580
39149 >= 5*xabs
5*xabs = 39149
B
w11581
7830 >= xabs
xabs = 7830
C
w11582
195757 >= 25*xabs
25*xabs = 195757
B
w11583
195763 >= 25*xabs
25*xabs = 195763
C
w11584
195769 >= 25*xabs
25*xabs = 195769
B
w11585
7831 >= xabs
xabs = 7831
C
w11586
195781 >= 25*xabs
25*xabs = 195781
B
w11587
195787 >= 25*xabs
25*xabs = 195787
C
w11588
195794 >= 25*xabs
25*xabs = 195794
B

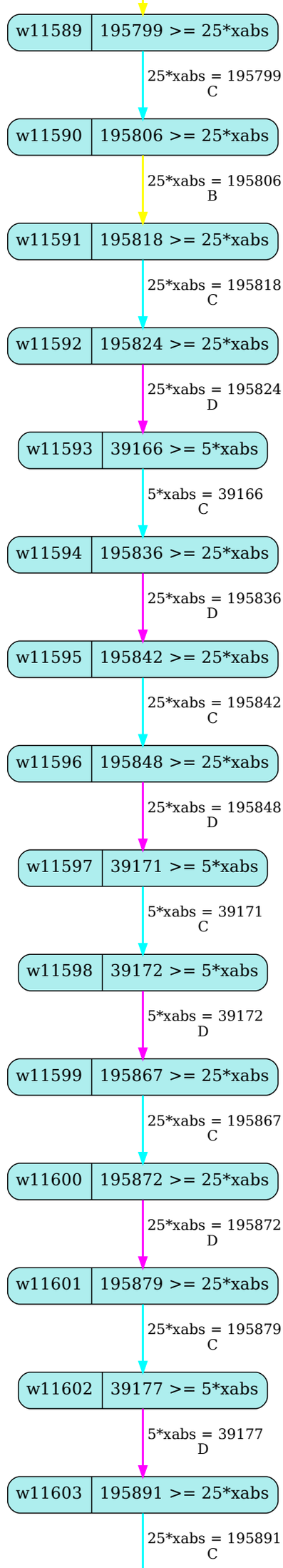
w11589
195799 >= 25*xabs
25*xabs = 195799
C
w11590
195806 >= 25*xabs
25*xabs = 195806
B
w11591
195818 >= 25*xabs
25*xabs = 195818
C
w11592
195824 >= 25*xabs
25*xabs = 195824
D
w11593
39166 >= 5*xabs
5*xabs = 39166
C
w11594
195836 >= 25*xabs
25*xabs = 195836
D
w11595
195842 >= 25*xabs
25*xabs = 195842
C
w11596
195848 >= 25*xabs
25*xabs = 195848
D
w11597
39171 >= 5*xabs
5*xabs = 39171
C
w11598
39172 >= 5*xabs
5*xabs = 39172
D
w11599
195867 >= 25*xabs
25*xabs = 195867
C
w11600
195872 >= 25*xabs
25*xabs = 195872
D
w11601
195879 >= 25*xabs
25*xabs = 195879
C
w11602
39177 >= 5*xabs
5*xabs = 39177
D
w11603
195891 >= 25*xabs
25*xabs = 195891
C

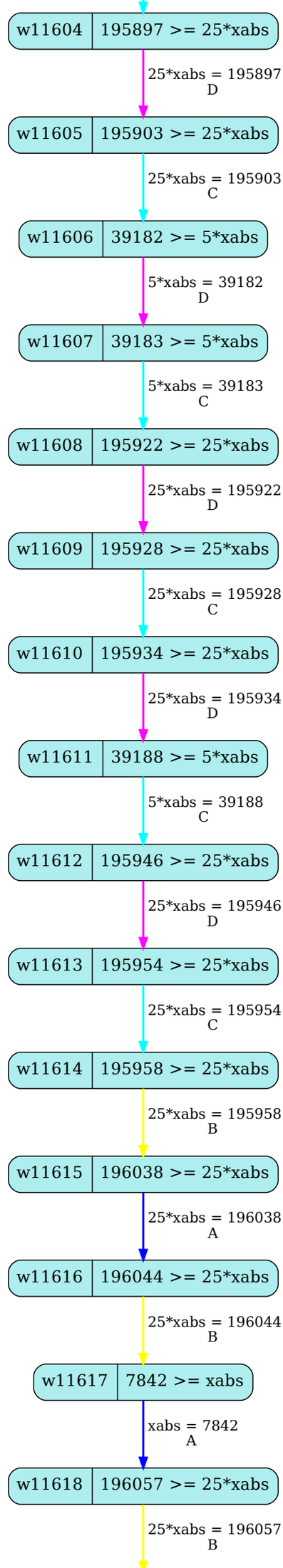
w11604
195897 >= 25*xabs
25*xabs = 195897
D
w11605
195903 >= 25*xabs
25*xabs = 195903
C
w11606
39182 >= 5*xabs
5*xabs = 39182
D
w11607
39183 >= 5*xabs
5*xabs = 39183
C
w11608
195922 >= 25*xabs
25*xabs = 195922
D
w11609
195928 >= 25*xabs
25*xabs = 195928
C
w11610
195934 >= 25*xabs
25*xabs = 195934
D
w11611
39188 >= 5*xabs
5*xabs = 39188
C
w11612
195946 >= 25*xabs
25*xabs = 195946
D
w11613
195954 >= 25*xabs
25*xabs = 195954
C
w11614
195958 >= 25*xabs
25*xabs = 195958
B
w11615
196038 >= 25*xabs
25*xabs = 196038
A
w11616
196044 >= 25*xabs
25*xabs = 196044
B
w11617
7842 >= xabs
xabs = 7842
A
w11618
196057 >= 25*xabs
25*xabs = 196057
B

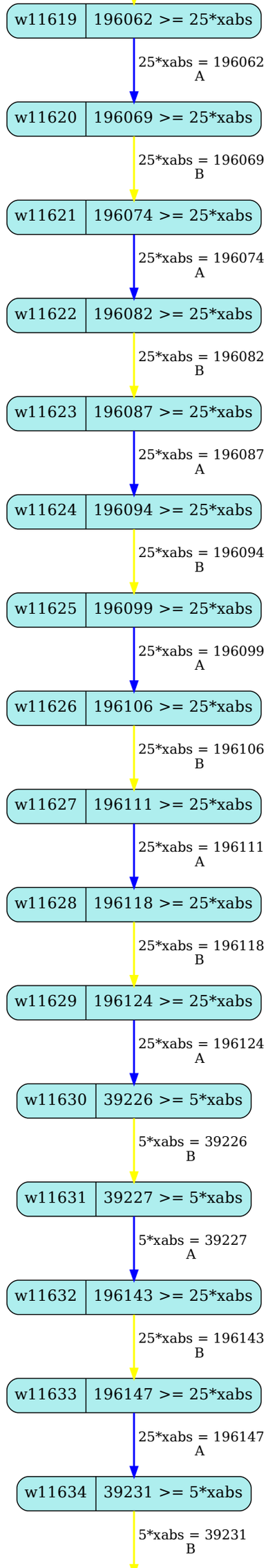
w11619
196062 >= 25*xabs
25*xabs = 196062
A
w11620
196069 >= 25*xabs
25*xabs = 196069
B
w11621
196074 >= 25*xabs
25*xabs = 196074
A
w11622
196082 >= 25*xabs
25*xabs = 196082
B
w11623
196087 >= 25*xabs
25*xabs = 196087
A
w11624
196094 >= 25*xabs
25*xabs = 196094
B
w11625
196099 >= 25*xabs
25*xabs = 196099
A
w11626
196106 >= 25*xabs
25*xabs = 196106
B
w11627
196111 >= 25*xabs
25*xabs = 196111
A
w11628
196118 >= 25*xabs
25*xabs = 196118
B
w11629
196124 >= 25*xabs
25*xabs = 196124
A
w11630
39226 >= 5*xabs
5*xabs = 39226
B
w11631
39227 >= 5*xabs
5*xabs = 39227
A
w11632
196143 >= 25*xabs
25*xabs = 196143
B
w11633
196147 >= 25*xabs
25*xabs = 196147
A
w11634
39231 >= 5*xabs
5*xabs = 39231
B

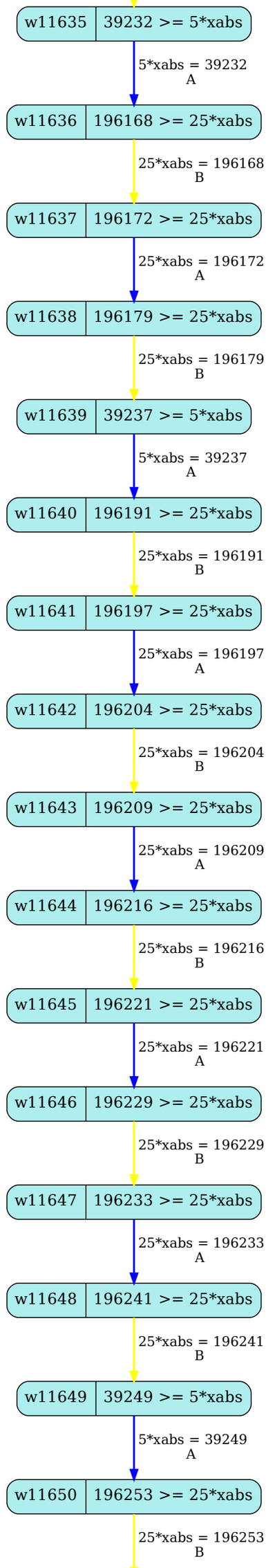
w11635
39232 >= 5*xabs
5*xabs = 39232
A
w11636
196168 >= 25*xabs
25*xabs = 196168
B
w11637
196172 >= 25*xabs
25*xabs = 196172
A
w11638
196179 >= 25*xabs
25*xabs = 196179
B
w11639
39237 >= 5*xabs
5*xabs = 39237
A
w11640
196191 >= 25*xabs
25*xabs = 196191
B
w11641
196197 >= 25*xabs
25*xabs = 196197
A
w11642
196204 >= 25*xabs
25*xabs = 196204
B
w11643
196209 >= 25*xabs
25*xabs = 196209
A
w11644
196216 >= 25*xabs
25*xabs = 196216
B
w11645
196221 >= 25*xabs
25*xabs = 196221
A
w11646
196229 >= 25*xabs
25*xabs = 196229
B
w11647
196233 >= 25*xabs
25*xabs = 196233
A
w11648
196241 >= 25*xabs
25*xabs = 196241
B
w11649
39249 >= 5*xabs
5*xabs = 39249
A
w11650
196253 >= 25*xabs
25*xabs = 196253
B

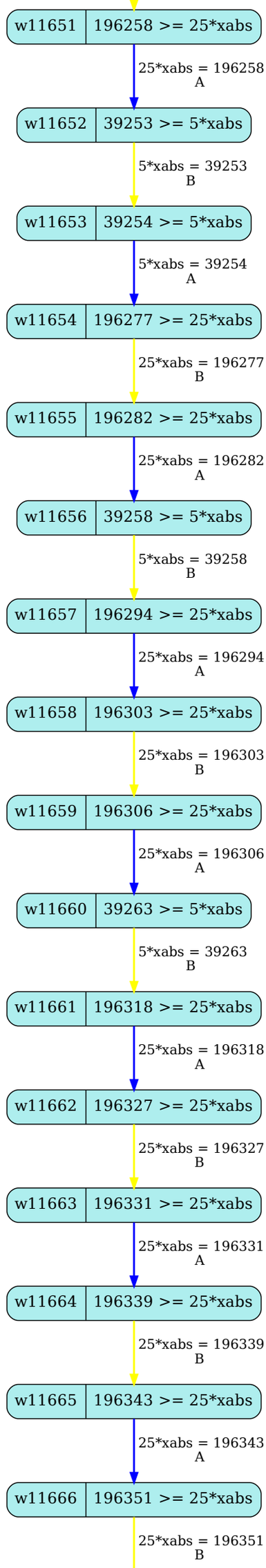
w11651
196258 >= 25*xabs
25*xabs = 196258
A
w11652
39253 >= 5*xabs
5*xabs = 39253
B
w11653
39254 >= 5*xabs
5*xabs = 39254
A
w11654
196277 >= 25*xabs
25*xabs = 196277
B
w11655
196282 >= 25*xabs
25*xabs = 196282
A
w11656
39258 >= 5*xabs
5*xabs = 39258
B
w11657
196294 >= 25*xabs
25*xabs = 196294
A
w11658
196303 >= 25*xabs
25*xabs = 196303
B
w11659
196306 >= 25*xabs
25*xabs = 196306
A
w11660
39263 >= 5*xabs
5*xabs = 39263
B
w11661
196318 >= 25*xabs
25*xabs = 196318
A
w11662
196327 >= 25*xabs
25*xabs = 196327
B
w11663
196331 >= 25*xabs
25*xabs = 196331
A
w11664
196339 >= 25*xabs
25*xabs = 196339
B
w11665
196343 >= 25*xabs
25*xabs = 196343
A
w11666
196351 >= 25*xabs
25*xabs = 196351
B

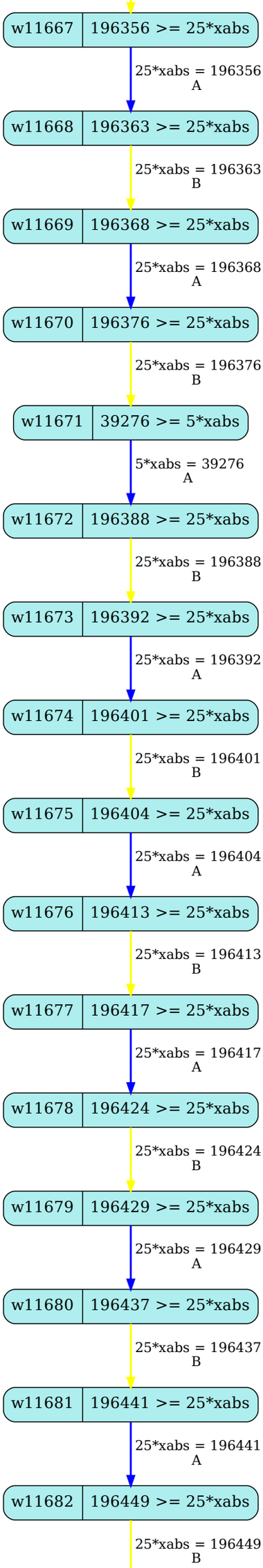
w11667
196356 >= 25*xabs
25*xabs = 196356
A
w11668
196363 >= 25*xabs
25*xabs = 196363
B
w11669
196368 >= 25*xabs
25*xabs = 196368
A
w11670
196376 >= 25*xabs
25*xabs = 196376
B
w11671
39276 >= 5*xabs
5*xabs = 39276
A
w11672
196388 >= 25*xabs
25*xabs = 196388
B
w11673
196392 >= 25*xabs
25*xabs = 196392
A
w11674
196401 >= 25*xabs
25*xabs = 196401
B
w11675
196404 >= 25*xabs
25*xabs = 196404
A
w11676
196413 >= 25*xabs
25*xabs = 196413
B
w11677
196417 >= 25*xabs
25*xabs = 196417
A
w11678
196424 >= 25*xabs
25*xabs = 196424
B
w11679
196429 >= 25*xabs
25*xabs = 196429
A
w11680
196437 >= 25*xabs
25*xabs = 196437
B
w11681
196441 >= 25*xabs
25*xabs = 196441
A
w11682
196449 >= 25*xabs
25*xabs = 196449
B

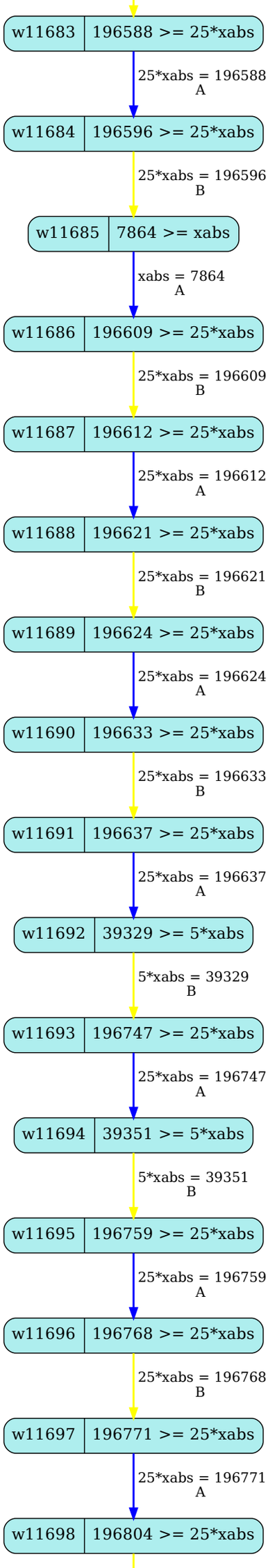
w11683
196588 >= 25*xabs
25*xabs = 196588
A
w11684
196596 >= 25*xabs
25*xabs = 196596
B
w11685
7864 >= xabs
xabs = 7864
A
w11686
196609 >= 25*xabs
25*xabs = 196609
B
w11687
196612 >= 25*xabs
25*xabs = 196612
A
w11688
196621 >= 25*xabs
25*xabs = 196621
B
w11689
196624 >= 25*xabs
25*xabs = 196624
A
w11690
196633 >= 25*xabs
25*xabs = 196633
B
w11691
196637 >= 25*xabs
25*xabs = 196637
A
w11692
39329 >= 5*xabs
5*xabs = 39329
B
w11693
196747 >= 25*xabs
25*xabs = 196747
A
w11694
39351 >= 5*xabs
5*xabs = 39351
B
w11695
196759 >= 25*xabs
25*xabs = 196759
A
w11696
196768 >= 25*xabs
25*xabs = 196768
B
w11697
196771 >= 25*xabs
25*xabs = 196771
A
w11698
196804 >= 25*xabs

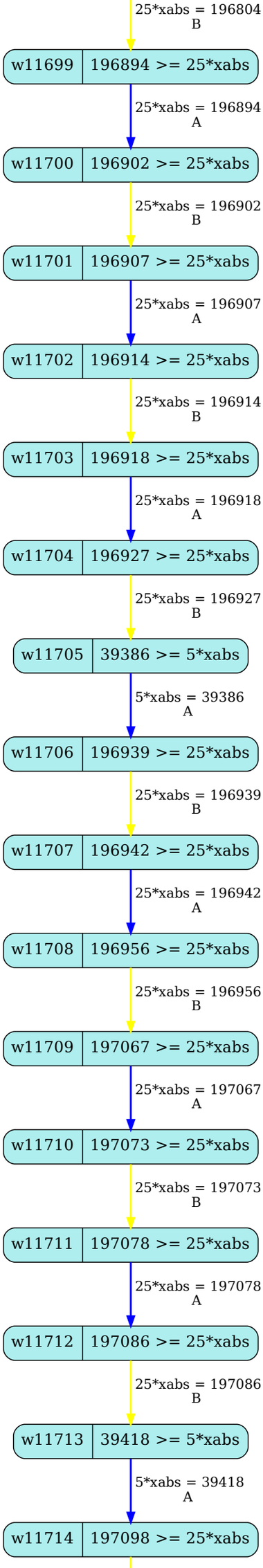
25*xabs = 196804
B
w11699
196894 >= 25*xabs
25*xabs = 196894
A
w11700
196902 >= 25*xabs
25*xabs = 196902
B
w11701
196907 >= 25*xabs
25*xabs = 196907
A
w11702
196914 >= 25*xabs
25*xabs = 196914
B
w11703
196918 >= 25*xabs
25*xabs = 196918
A
w11704
196927 >= 25*xabs
25*xabs = 196927
B
w11705
39386 >= 5*xabs
5*xabs = 39386
A
w11706
196939 >= 25*xabs
25*xabs = 196939
B
w11707
196942 >= 25*xabs
25*xabs = 196942
A
w11708
196956 >= 25*xabs
25*xabs = 196956
B
w11709
197067 >= 25*xabs
25*xabs = 197067
A
w11710
197073 >= 25*xabs
25*xabs = 197073
B
w11711
197078 >= 25*xabs
25*xabs = 197078
A
w11712
197086 >= 25*xabs
25*xabs = 197086
B
w11713
39418 >= 5*xabs
5*xabs = 39418
A
w11714
197098 >= 25*xabs

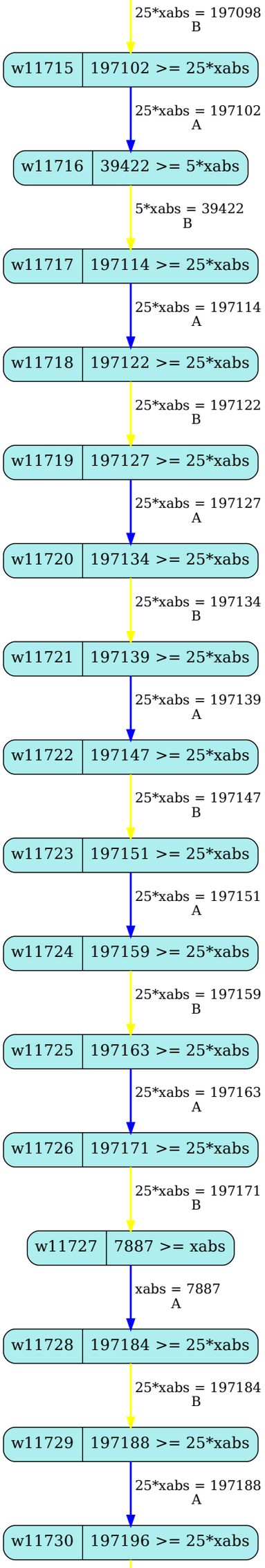
25*xabs = 197098
B
w11715
197102 >= 25*xabs
25*xabs = 197102
A
w11716
39422 >= 5*xabs
5*xabs = 39422
B
w11717
197114 >= 25*xabs
25*xabs = 197114
A
w11718
197122 >= 25*xabs
25*xabs = 197122
B
w11719
197127 >= 25*xabs
25*xabs = 197127
A
w11720
197134 >= 25*xabs
25*xabs = 197134
B
w11721
197139 >= 25*xabs
25*xabs = 197139
A
w11722
197147 >= 25*xabs
25*xabs = 197147
B
w11723
197151 >= 25*xabs
25*xabs = 197151
A
w11724
197159 >= 25*xabs
25*xabs = 197159
B
w11725
197163 >= 25*xabs
25*xabs = 197163
A
w11726
197171 >= 25*xabs
25*xabs = 197171
B
w11727
7887 >= xabs
xabs = 7887
A
w11728
197184 >= 25*xabs
25*xabs = 197184
B
w11729
197188 >= 25*xabs
25*xabs = 197188
A
w11730
197196 >= 25*xabs

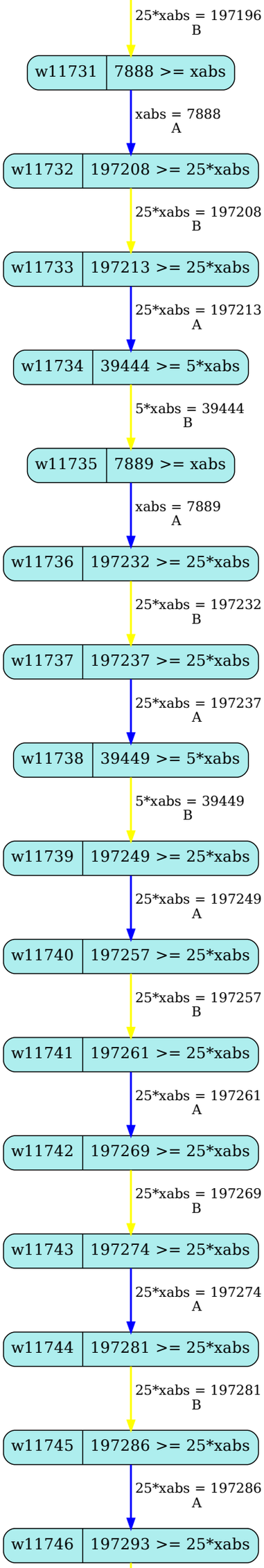
25*xabs = 197196
B
w11731
7888 >= xabs
xabs = 7888
A
w11732
197208 >= 25*xabs
25*xabs = 197208
B
w11733
197213 >= 25*xabs
25*xabs = 197213
A
w11734
39444 >= 5*xabs
5*xabs = 39444
B
w11735
7889 >= xabs
xabs = 7889
A
w11736
197232 >= 25*xabs
25*xabs = 197232
B
w11737
197237 >= 25*xabs
25*xabs = 197237
A
w11738
39449 >= 5*xabs
5*xabs = 39449
B
w11739
197249 >= 25*xabs
25*xabs = 197249
A
w11740
197257 >= 25*xabs
25*xabs = 197257
B
w11741
197261 >= 25*xabs
25*xabs = 197261
A
w11742
197269 >= 25*xabs
25*xabs = 197269
B
w11743
197274 >= 25*xabs
25*xabs = 197274
A
w11744
197281 >= 25*xabs
25*xabs = 197281
B
w11745
197286 >= 25*xabs
25*xabs = 197286
A
w11746
197293 >= 25*xabs

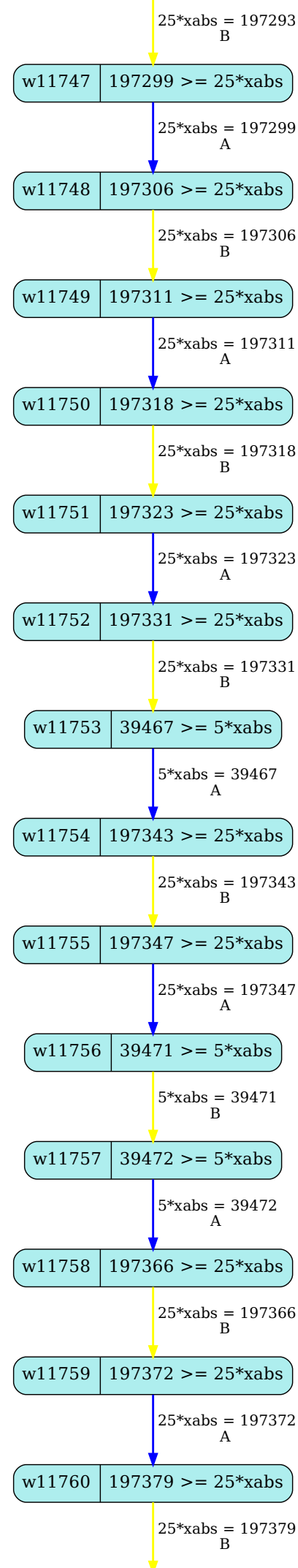
25*xabs = 197293
B
w11747
197299 >= 25*xabs
25*xabs = 197299
A
w11748
197306 >= 25*xabs
25*xabs = 197306
B
w11749
197311 >= 25*xabs
25*xabs = 197311
A
w11750
197318 >= 25*xabs
25*xabs = 197318
B
w11751
197323 >= 25*xabs
25*xabs = 197323
A
w11752
197331 >= 25*xabs
25*xabs = 197331
B
w11753
39467 >= 5*xabs
5*xabs = 39467
A
w11754
197343 >= 25*xabs
25*xabs = 197343
B
w11755
197347 >= 25*xabs
25*xabs = 197347
A
w11756
39471 >= 5*xabs
5*xabs = 39471
B
w11757
39472 >= 5*xabs
5*xabs = 39472
A
w11758
197366 >= 25*xabs
25*xabs = 197366
B
w11759
197372 >= 25*xabs
25*xabs = 197372
A
w11760
197379 >= 25*xabs
25*xabs = 197379
B

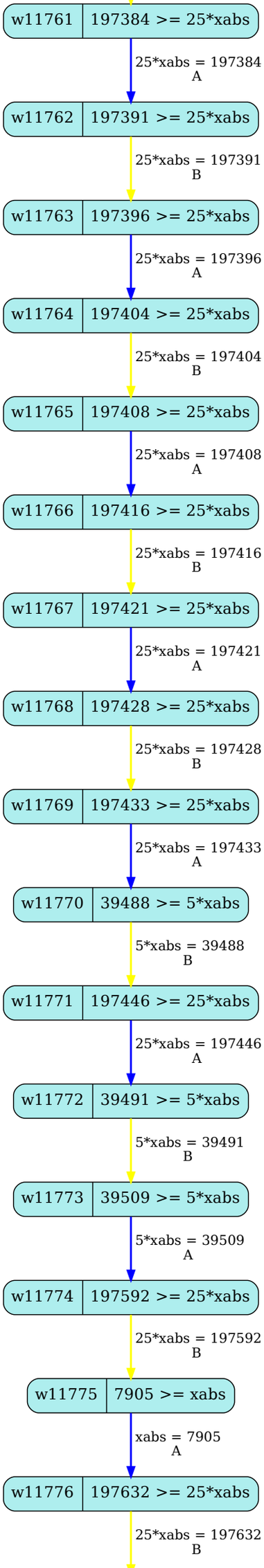
w11761
197384 >= 25*xabs
25*xabs = 197384
A
w11762
197391 >= 25*xabs
25*xabs = 197391
B
w11763
197396 >= 25*xabs
25*xabs = 197396
A
w11764
197404 >= 25*xabs
25*xabs = 197404
B
w11765
197408 >= 25*xabs
25*xabs = 197408
A
w11766
197416 >= 25*xabs
25*xabs = 197416
B
w11767
197421 >= 25*xabs
25*xabs = 197421
A
w11768
197428 >= 25*xabs
25*xabs = 197428
B
w11769
197433 >= 25*xabs
25*xabs = 197433
A
w11770
39488 >= 5*xabs
5*xabs = 39488
B
w11771
197446 >= 25*xabs
25*xabs = 197446
A
w11772
39491 >= 5*xabs
5*xabs = 39491
B
w11773
39509 >= 5*xabs
5*xabs = 39509
A
w11774
197592 >= 25*xabs
25*xabs = 197592
B
w11775
7905 >= xabs
xabs = 7905
A
w11776
197632 >= 25*xabs
25*xabs = 197632
B

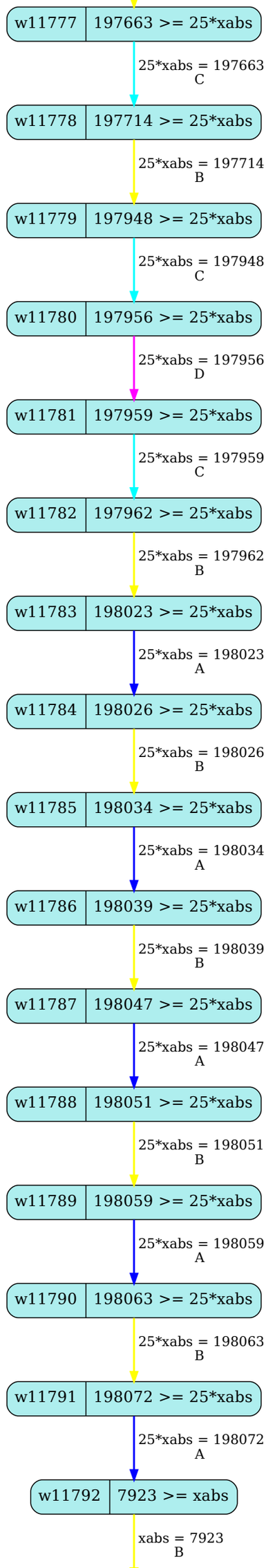
w11777
197663 >= 25*xabs
25*xabs = 197663
C
w11778
197714 >= 25*xabs
25*xabs = 197714
B
w11779
197948 >= 25*xabs
25*xabs = 197948
C
w11780
197956 >= 25*xabs
25*xabs = 197956
D
w11781
197959 >= 25*xabs
25*xabs = 197959
C
w11782
197962 >= 25*xabs
25*xabs = 197962
B
w11783
198023 >= 25*xabs
25*xabs = 198023
A
w11784
198026 >= 25*xabs
25*xabs = 198026
B
w11785
198034 >= 25*xabs
25*xabs = 198034
A
w11786
198039 >= 25*xabs
25*xabs = 198039
B
w11787
198047 >= 25*xabs
25*xabs = 198047
A
w11788
198051 >= 25*xabs
25*xabs = 198051
B
w11789
198059 >= 25*xabs
25*xabs = 198059
A
w11790
198063 >= 25*xabs
25*xabs = 198063
B
w11791
198072 >= 25*xabs
25*xabs = 198072
A
w11792
7923 >= xabs
xabs = 7923
B

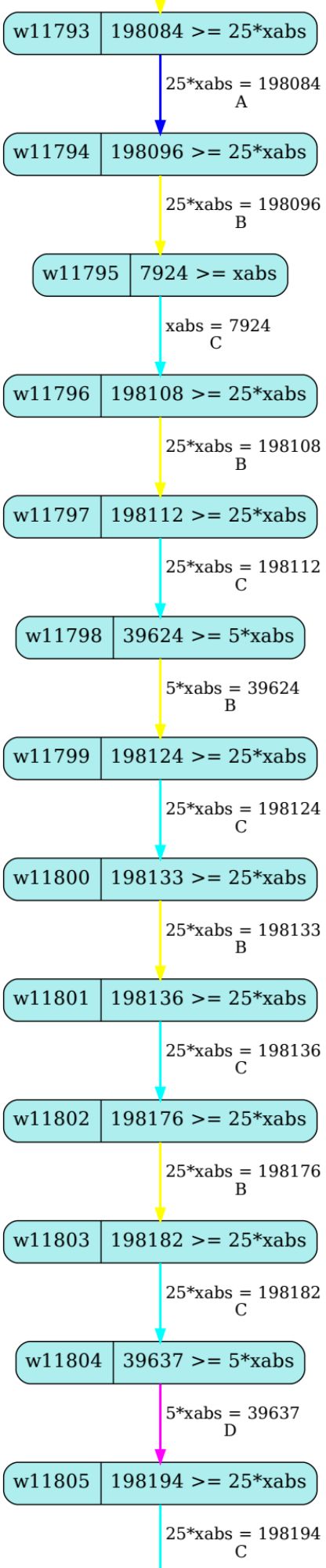
w11793
198084 >= 25*xabs
25*xabs = 198084
A
w11794
198096 >= 25*xabs
25*xabs = 198096
B
w11795
7924 >= xabs
xabs = 7924
C
w11796
198108 >= 25*xabs
25*xabs = 198108
B
w11797
198112 >= 25*xabs
25*xabs = 198112
C
w11798
39624 >= 5*xabs
5*xabs = 39624
B
w11799
198124 >= 25*xabs
25*xabs = 198124
C
w11800
198133 >= 25*xabs
25*xabs = 198133
B
w11801
198136 >= 25*xabs
25*xabs = 198136
C
w11802
198176 >= 25*xabs
25*xabs = 198176
B
w11803
198182 >= 25*xabs
25*xabs = 198182
C
w11804
39637 >= 5*xabs
5*xabs = 39637
D
w11805
198194 >= 25*xabs
25*xabs = 198194
C

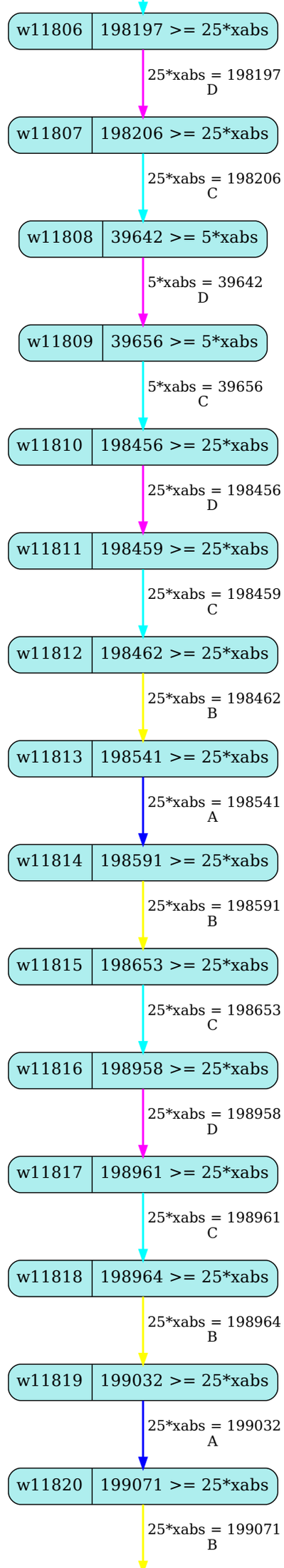
w11806
198197 >= 25*xabs
25*xabs = 198197
D
w11807
198206 >= 25*xabs
25*xabs = 198206
C
w11808
39642 >= 5*xabs
5*xabs = 39642
D
w11809
39656 >= 5*xabs
5*xabs = 39656
C
w11810
198456 >= 25*xabs
25*xabs = 198456
D
w11811
198459 >= 25*xabs
25*xabs = 198459
C
w11812
198462 >= 25*xabs
25*xabs = 198462
B
w11813
198541 >= 25*xabs
25*xabs = 198541
A
w11814
198591 >= 25*xabs
25*xabs = 198591
B
w11815
198653 >= 25*xabs
25*xabs = 198653
C
w11816
198958 >= 25*xabs
25*xabs = 198958
D
w11817
198961 >= 25*xabs
25*xabs = 198961
C
w11818
198964 >= 25*xabs
25*xabs = 198964
B
w11819
199032 >= 25*xabs
25*xabs = 199032
A
w11820
199071 >= 25*xabs
25*xabs = 199071
B

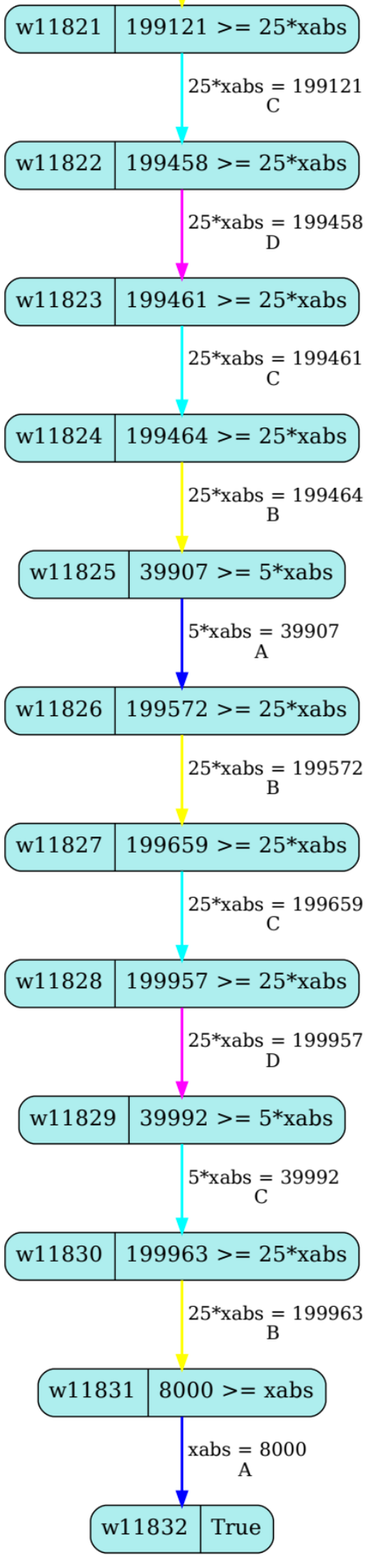
w11821
199121 >= 25*xabs
25*xabs = 199121
C
w11822
199458 >= 25*xabs
25*xabs = 199458
D
w11823
199461 >= 25*xabs
25*xabs = 199461
C
w11824
199464 >= 25*xabs
25*xabs = 199464
B
w11825
39907 >= 5*xabs
5*xabs = 39907
A
w11826
199572 >= 25*xabs
25*xabs = 199572
B
w11827
199659 >= 25*xabs
25*xabs = 199659
C
w11828
199957 >= 25*xabs
25*xabs = 199957
D
w11829
39992 >= 5*xabs
5*xabs = 39992
C
w11830
199963 >= 25*xabs
25*xabs = 199963
B
w11831
8000 >= xabs
xabs = 8000
A
w11832
True