gear-6000.imi

Generated by IMITATOR 3.1 "Cheese Artichoke"
Build: HEAD/ec224ec
Generation time: Fri Jul 23, 2021 10:20:39

2 clocks	3 parameters	Initial
x xabs	p1 t tprime	p1 >= 0 & t >= 0 & tprime >= 0 & x = 0 & xabs = 0

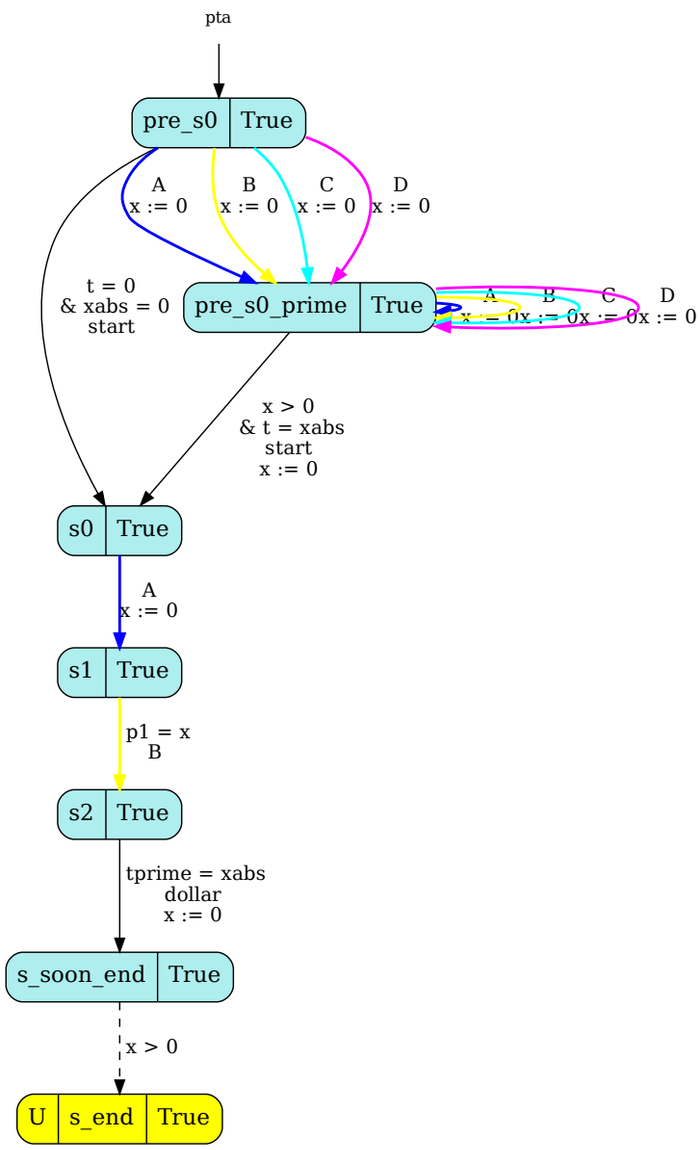

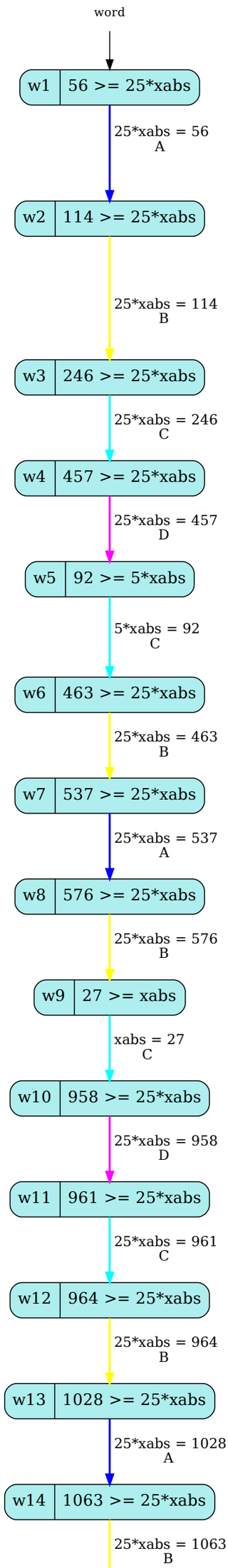

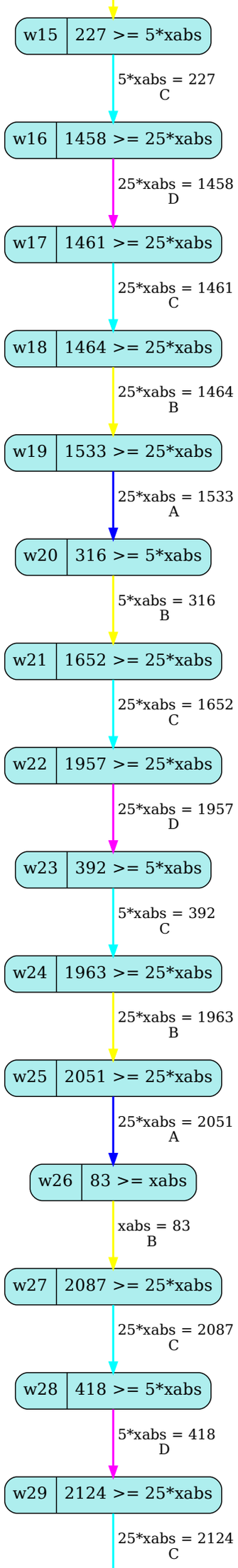
w15
227 >= 5*xabs
5*xabs = 227
C
w16
1458 >= 25*xabs
25*xabs = 1458
D
w17
1461 >= 25*xabs
25*xabs = 1461
C
w18
1464 >= 25*xabs
25*xabs = 1464
B
w19
1533 >= 25*xabs
25*xabs = 1533
A
w20
316 >= 5*xabs
5*xabs = 316
B
w21
1652 >= 25*xabs
25*xabs = 1652
C
w22
1957 >= 25*xabs
25*xabs = 1957
D
w23
392 >= 5*xabs
5*xabs = 392
C
w24
1963 >= 25*xabs
25*xabs = 1963
B
w25
2051 >= 25*xabs
25*xabs = 2051
A
w26
83 >= xabs
xabs = 83
B
w27
2087 >= 25*xabs
25*xabs = 2087
C
w28
418 >= 5*xabs
5*xabs = 418
D
w29
2124 >= 25*xabs
25*xabs = 2124
C

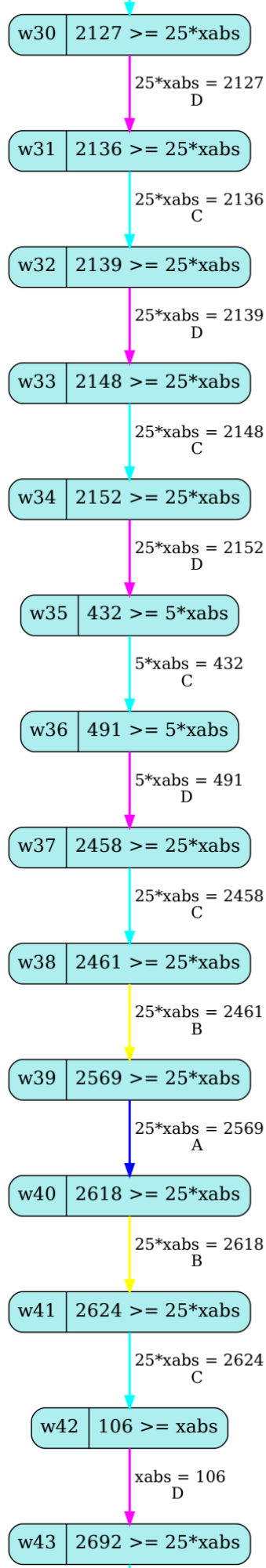
w30
2127 >= 25*xabs
25*xabs = 2127
D
w31
2136 >= 25*xabs
25*xabs = 2136
C
w32
2139 >= 25*xabs
25*xabs = 2139
D
w33
2148 >= 25*xabs
25*xabs = 2148
C
w34
2152 >= 25*xabs
25*xabs = 2152
D
w35
432 >= 5*xabs
5*xabs = 432
C
w36
491 >= 5*xabs
5*xabs = 491
D
w37
2458 >= 25*xabs
25*xabs = 2458
C
w38
2461 >= 25*xabs
25*xabs = 2461
B
w39
2569 >= 25*xabs
25*xabs = 2569
A
w40
2618 >= 25*xabs
25*xabs = 2618
B
w41
2624 >= 25*xabs
25*xabs = 2624
C
w42
106 >= xabs
xabs = 106
D
w43
2692 >= 25*xabs

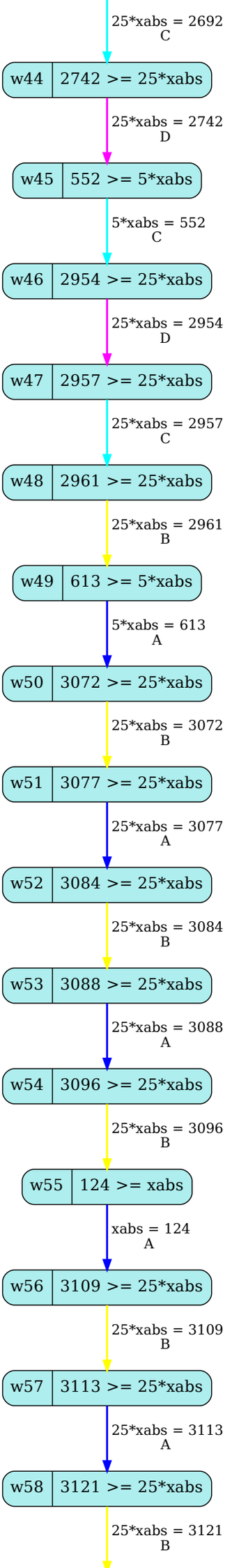
25*xabs = 2692
C
w44
2742 >= 25*xabs
25*xabs = 2742
D
w45
552 >= 5*xabs
5*xabs = 552
C
w46
2954 >= 25*xabs
25*xabs = 2954
D
w47
2957 >= 25*xabs
25*xabs = 2957
C
w48
2961 >= 25*xabs
25*xabs = 2961
B
w49
613 >= 5*xabs
5*xabs = 613
A
w50
3072 >= 25*xabs
25*xabs = 3072
B
w51
3077 >= 25*xabs
25*xabs = 3077
A
w52
3084 >= 25*xabs
25*xabs = 3084
B
w53
3088 >= 25*xabs
25*xabs = 3088
A
w54
3096 >= 25*xabs
25*xabs = 3096
B
w55
124 >= xabs
xabs = 124
A
w56
3109 >= 25*xabs
25*xabs = 3109
B
w57
3113 >= 25*xabs
25*xabs = 3113
A
w58
3121 >= 25*xabs
25*xabs = 3121
B

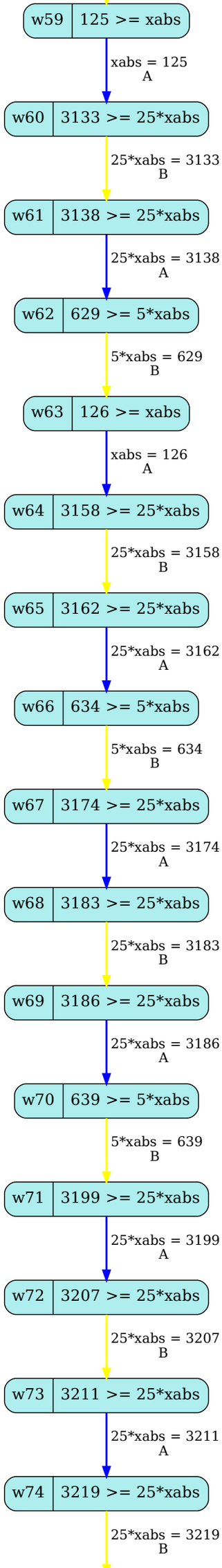
w59
125 >= xabs
xabs = 125
A
w60
3133 >= 25*xabs
25*xabs = 3133
B
w61
3138 >= 25*xabs
25*xabs = 3138
A
w62
629 >= 5*xabs
5*xabs = 629
B
w63
126 >= xabs
xabs = 126
A
w64
3158 >= 25*xabs
25*xabs = 3158
B
w65
3162 >= 25*xabs
25*xabs = 3162
A
w66
634 >= 5*xabs
5*xabs = 634
B
w67
3174 >= 25*xabs
25*xabs = 3174
A
w68
3183 >= 25*xabs
25*xabs = 3183
B
w69
3186 >= 25*xabs
25*xabs = 3186
A
w70
639 >= 5*xabs
5*xabs = 639
B
w71
3199 >= 25*xabs
25*xabs = 3199
A
w72
3207 >= 25*xabs
25*xabs = 3207
B
w73
3211 >= 25*xabs
25*xabs = 3211
A
w74
3219 >= 25*xabs
25*xabs = 3219
B

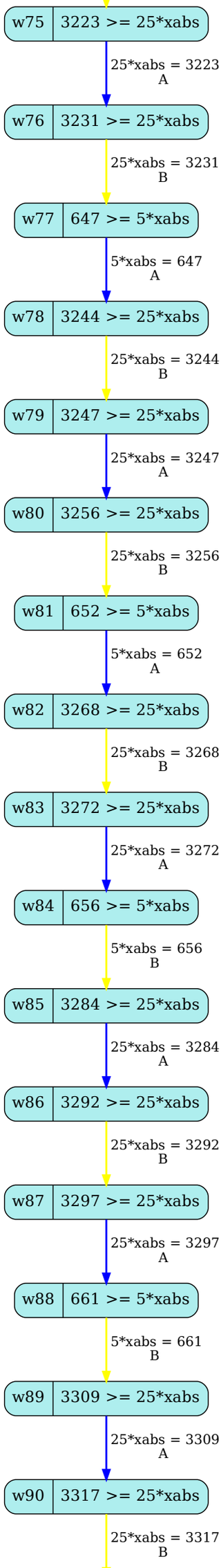
w75
3223 >= 25*xabs
25*xabs = 3223
A
w76
3231 >= 25*xabs
25*xabs = 3231
B
w77
647 >= 5*xabs
5*xabs = 647
A
w78
3244 >= 25*xabs
25*xabs = 3244
B
w79
3247 >= 25*xabs
25*xabs = 3247
A
w80
3256 >= 25*xabs
25*xabs = 3256
B
w81
652 >= 5*xabs
5*xabs = 652
A
w82
3268 >= 25*xabs
25*xabs = 3268
B
w83
3272 >= 25*xabs
25*xabs = 3272
A
w84
656 >= 5*xabs
5*xabs = 656
B
w85
3284 >= 25*xabs
25*xabs = 3284
A
w86
3292 >= 25*xabs
25*xabs = 3292
B
w87
3297 >= 25*xabs
25*xabs = 3297
A
w88
661 >= 5*xabs
5*xabs = 661
B
w89
3309 >= 25*xabs
25*xabs = 3309
A
w90
3317 >= 25*xabs
25*xabs = 3317
B

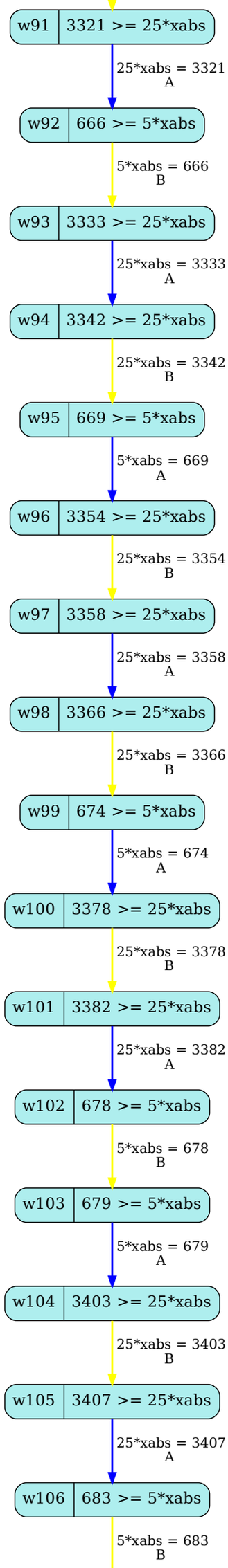
w91
3321 >= 25*xabs
25*xabs = 3321
A
w92
666 >= 5*xabs
5*xabs = 666
B
w93
3333 >= 25*xabs
25*xabs = 3333
A
w94
3342 >= 25*xabs
25*xabs = 3342
B
w95
669 >= 5*xabs
5*xabs = 669
A
w96
3354 >= 25*xabs
25*xabs = 3354
B
w97
3358 >= 25*xabs
25*xabs = 3358
A
w98
3366 >= 25*xabs
25*xabs = 3366
B
w99
674 >= 5*xabs
5*xabs = 674
A
w100
3378 >= 25*xabs
25*xabs = 3378
B
w101
3382 >= 25*xabs
25*xabs = 3382
A
w102
678 >= 5*xabs
5*xabs = 678
B
w103
679 >= 5*xabs
5*xabs = 679
A
w104
3403 >= 25*xabs
25*xabs = 3403
B
w105
3407 >= 25*xabs
25*xabs = 3407
A
w106
683 >= 5*xabs
5*xabs = 683
B

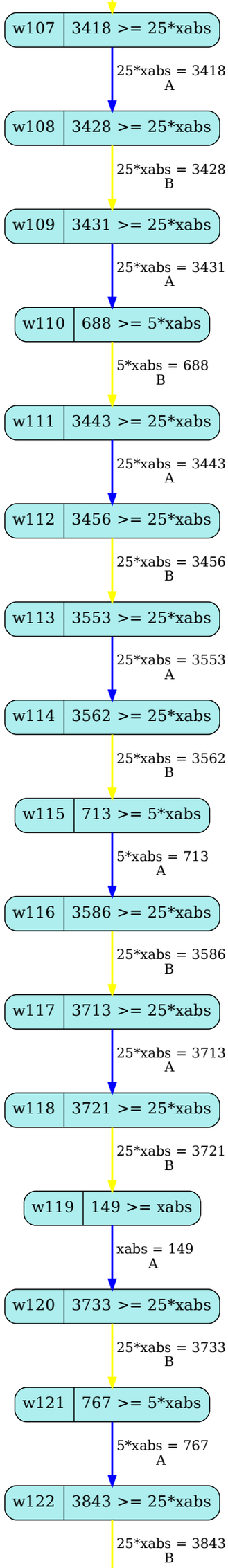
w107
3418 >= 25*xabs
25*xabs = 3418
A
w108
3428 >= 25*xabs
25*xabs = 3428
B
w109
3431 >= 25*xabs
25*xabs = 3431
A
w110
688 >= 5*xabs
5*xabs = 688
B
w111
3443 >= 25*xabs
25*xabs = 3443
A
w112
3456 >= 25*xabs
25*xabs = 3456
B
w113
3553 >= 25*xabs
25*xabs = 3553
A
w114
3562 >= 25*xabs
25*xabs = 3562
B
w115
713 >= 5*xabs
5*xabs = 713
A
w116
3586 >= 25*xabs
25*xabs = 3586
B
w117
3713 >= 25*xabs
25*xabs = 3713
A
w118
3721 >= 25*xabs
25*xabs = 3721
B
w119
149 >= xabs
xabs = 149
A
w120
3733 >= 25*xabs
25*xabs = 3733
B
w121
767 >= 5*xabs
5*xabs = 767
A
w122
3843 >= 25*xabs
25*xabs = 3843
B

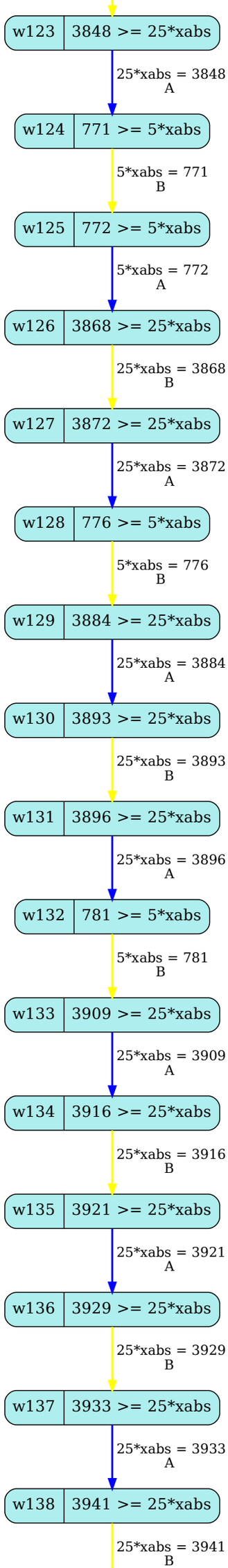
w123
3848 >= 25*xabs
25*xabs = 3848
A
w124
771 >= 5*xabs
5*xabs = 771
B
w125
772 >= 5*xabs
5*xabs = 772
A
w126
3868 >= 25*xabs
25*xabs = 3868
B
w127
3872 >= 25*xabs
25*xabs = 3872
A
w128
776 >= 5*xabs
5*xabs = 776
B
w129
3884 >= 25*xabs
25*xabs = 3884
A
w130
3893 >= 25*xabs
25*xabs = 3893
B
w131
3896 >= 25*xabs
25*xabs = 3896
A
w132
781 >= 5*xabs
5*xabs = 781
B
w133
3909 >= 25*xabs
25*xabs = 3909
A
w134
3916 >= 25*xabs
25*xabs = 3916
B
w135
3921 >= 25*xabs
25*xabs = 3921
A
w136
3929 >= 25*xabs
25*xabs = 3929
B
w137
3933 >= 25*xabs
25*xabs = 3933
A
w138
3941 >= 25*xabs
25*xabs = 3941
B

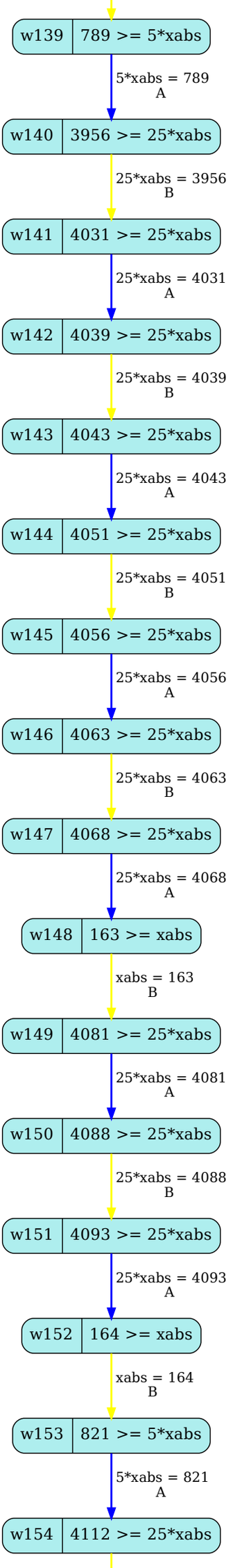
w139
789 >= 5*xabs
5*xabs = 789
A
w140
3956 >= 25*xabs
25*xabs = 3956
B
w141
4031 >= 25*xabs
25*xabs = 4031
A
w142
4039 >= 25*xabs
25*xabs = 4039
B
w143
4043 >= 25*xabs
25*xabs = 4043
A
w144
4051 >= 25*xabs
25*xabs = 4051
B
w145
4056 >= 25*xabs
25*xabs = 4056
A
w146
4063 >= 25*xabs
25*xabs = 4063
B
w147
4068 >= 25*xabs
25*xabs = 4068
A
w148
163 >= xabs
xabs = 163
B
w149
4081 >= 25*xabs
25*xabs = 4081
A
w150
4088 >= 25*xabs
25*xabs = 4088
B
w151
4093 >= 25*xabs
25*xabs = 4093
A
w152
164 >= xabs
xabs = 164
B
w153
821 >= 5*xabs
5*xabs = 821
A
w154
4112 >= 25*xabs

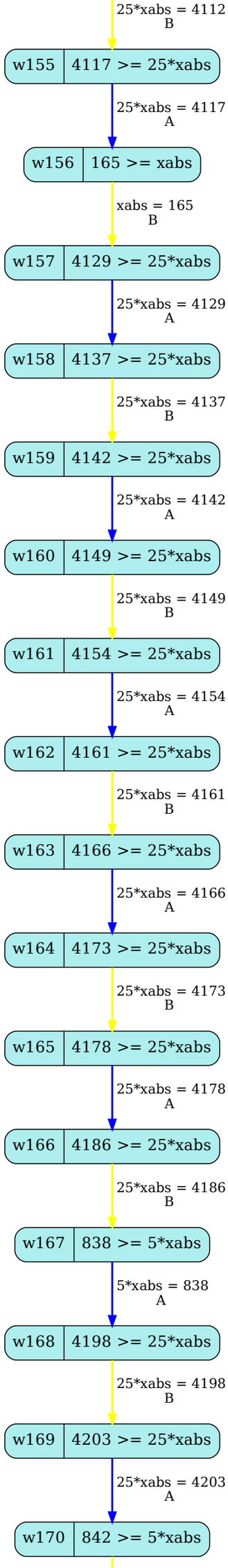
25*xabs = 4112
B
w155
4117 >= 25*xabs
25*xabs = 4117
A
w156
165 >= xabs
xabs = 165
B
w157
4129 >= 25*xabs
25*xabs = 4129
A
w158
4137 >= 25*xabs
25*xabs = 4137
B
w159
4142 >= 25*xabs
25*xabs = 4142
A
w160
4149 >= 25*xabs
25*xabs = 4149
B
w161
4154 >= 25*xabs
25*xabs = 4154
A
w162
4161 >= 25*xabs
25*xabs = 4161
B
w163
4166 >= 25*xabs
25*xabs = 4166
A
w164
4173 >= 25*xabs
25*xabs = 4173
B
w165
4178 >= 25*xabs
25*xabs = 4178
A
w166
4186 >= 25*xabs
25*xabs = 4186
B
w167
838 >= 5*xabs
5*xabs = 838
A
w168
4198 >= 25*xabs
25*xabs = 4198
B
w169
4203 >= 25*xabs
25*xabs = 4203
A
w170
842 >= 5*xabs

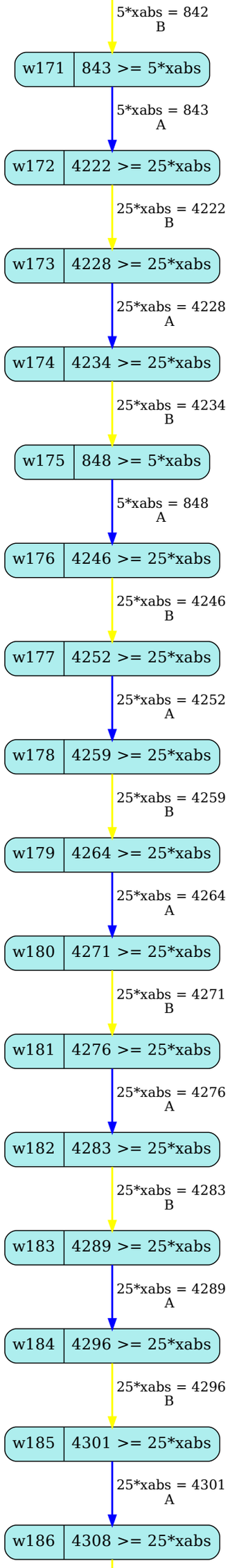
5*xabs = 842
B
w171
843 >= 5*xabs
5*xabs = 843
A
w172
4222 >= 25*xabs
25*xabs = 4222
B
w173
4228 >= 25*xabs
25*xabs = 4228
A
w174
4234 >= 25*xabs
25*xabs = 4234
B
w175
848 >= 5*xabs
5*xabs = 848
A
w176
4246 >= 25*xabs
25*xabs = 4246
B
w177
4252 >= 25*xabs
25*xabs = 4252
A
w178
4259 >= 25*xabs
25*xabs = 4259
B
w179
4264 >= 25*xabs
25*xabs = 4264
A
w180
4271 >= 25*xabs
25*xabs = 4271
B
w181
4276 >= 25*xabs
25*xabs = 4276
A
w182
4283 >= 25*xabs
25*xabs = 4283
B
w183
4289 >= 25*xabs
25*xabs = 4289
A
w184
4296 >= 25*xabs
25*xabs = 4296
B
w185
4301 >= 25*xabs
25*xabs = 4301
A
w186
4308 >= 25*xabs

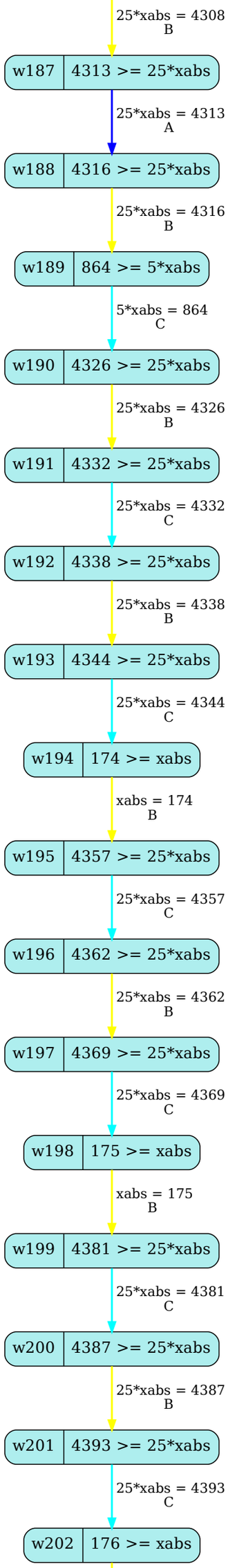
25*xabs = 4308
B
w187
4313 >= 25*xabs
25*xabs = 4313
A
w188
4316 >= 25*xabs
25*xabs = 4316
B
w189
864 >= 5*xabs
5*xabs = 864
C
w190
4326 >= 25*xabs
25*xabs = 4326
B
w191
4332 >= 25*xabs
25*xabs = 4332
C
w192
4338 >= 25*xabs
25*xabs = 4338
B
w193
4344 >= 25*xabs
25*xabs = 4344
C
w194
174 >= xabs
xabs = 174
B
w195
4357 >= 25*xabs
25*xabs = 4357
C
w196
4362 >= 25*xabs
25*xabs = 4362
B
w197
4369 >= 25*xabs
25*xabs = 4369
C
w198
175 >= xabs
xabs = 175
B
w199
4381 >= 25*xabs
25*xabs = 4381
C
w200
4387 >= 25*xabs
25*xabs = 4387
B
w201
4393 >= 25*xabs
25*xabs = 4393
C
w202
176 >= xabs

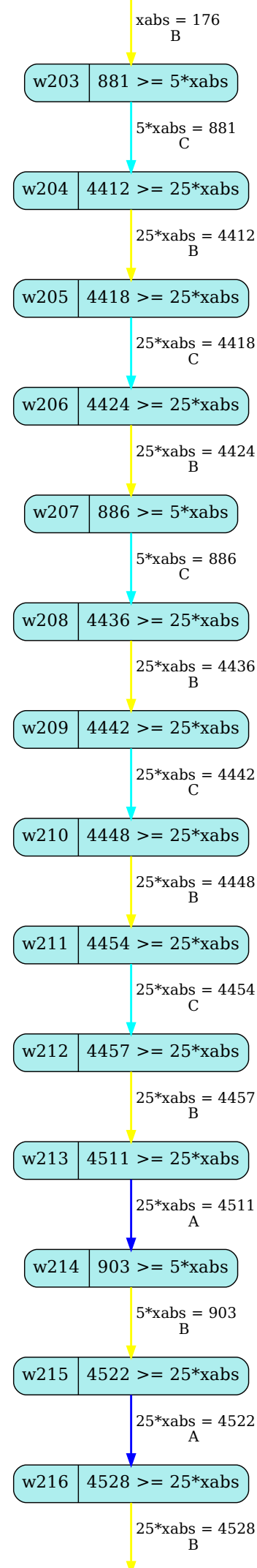
xabs = 176
B
w203
881 >= 5*xabs
5*xabs = 881
C
w204
4412 >= 25*xabs
25*xabs = 4412
B
w205
4418 >= 25*xabs
25*xabs = 4418
C
w206
4424 >= 25*xabs
25*xabs = 4424
B
w207
886 >= 5*xabs
5*xabs = 886
C
w208
4436 >= 25*xabs
25*xabs = 4436
B
w209
4442 >= 25*xabs
25*xabs = 4442
C
w210
4448 >= 25*xabs
25*xabs = 4448
B
w211
4454 >= 25*xabs
25*xabs = 4454
C
w212
4457 >= 25*xabs
25*xabs = 4457
B
w213
4511 >= 25*xabs
25*xabs = 4511
A
w214
903 >= 5*xabs
5*xabs = 903
B
w215
4522 >= 25*xabs
25*xabs = 4522
A
w216
4528 >= 25*xabs
25*xabs = 4528
B

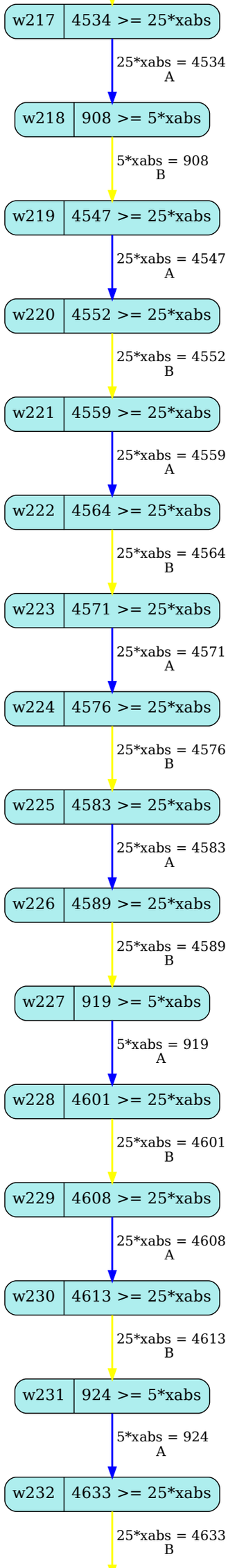
w217
4534 >= 25*xabs
25*xabs = 4534
A
w218
908 >= 5*xabs
5*xabs = 908
B
w219
4547 >= 25*xabs
25*xabs = 4547
A
w220
4552 >= 25*xabs
25*xabs = 4552
B
w221
4559 >= 25*xabs
25*xabs = 4559
A
w222
4564 >= 25*xabs
25*xabs = 4564
B
w223
4571 >= 25*xabs
25*xabs = 4571
A
w224
4576 >= 25*xabs
25*xabs = 4576
B
w225
4583 >= 25*xabs
25*xabs = 4583
A
w226
4589 >= 25*xabs
25*xabs = 4589
B
w227
919 >= 5*xabs
5*xabs = 919
A
w228
4601 >= 25*xabs
25*xabs = 4601
B
w229
4608 >= 25*xabs
25*xabs = 4608
A
w230
4613 >= 25*xabs
25*xabs = 4613
B
w231
924 >= 5*xabs
5*xabs = 924
A
w232
4633 >= 25*xabs
25*xabs = 4633
B

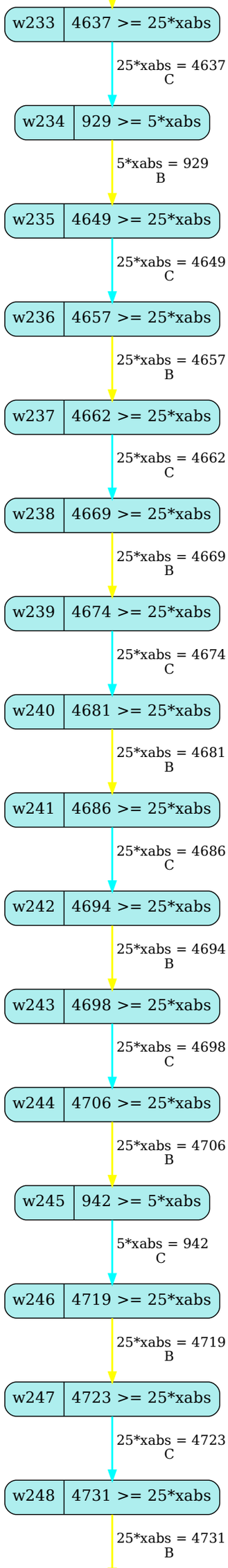
w233
4637 >= 25*xabs
25*xabs = 4637
C
w234
929 >= 5*xabs
5*xabs = 929
B
w235
4649 >= 25*xabs
25*xabs = 4649
C
w236
4657 >= 25*xabs
25*xabs = 4657
B
w237
4662 >= 25*xabs
25*xabs = 4662
C
w238
4669 >= 25*xabs
25*xabs = 4669
B
w239
4674 >= 25*xabs
25*xabs = 4674
C
w240
4681 >= 25*xabs
25*xabs = 4681
B
w241
4686 >= 25*xabs
25*xabs = 4686
C
w242
4694 >= 25*xabs
25*xabs = 4694
B
w243
4698 >= 25*xabs
25*xabs = 4698
C
w244
4706 >= 25*xabs
25*xabs = 4706
B
w245
942 >= 5*xabs
5*xabs = 942
C
w246
4719 >= 25*xabs
25*xabs = 4719
B
w247
4723 >= 25*xabs
25*xabs = 4723
C
w248
4731 >= 25*xabs
25*xabs = 4731
B

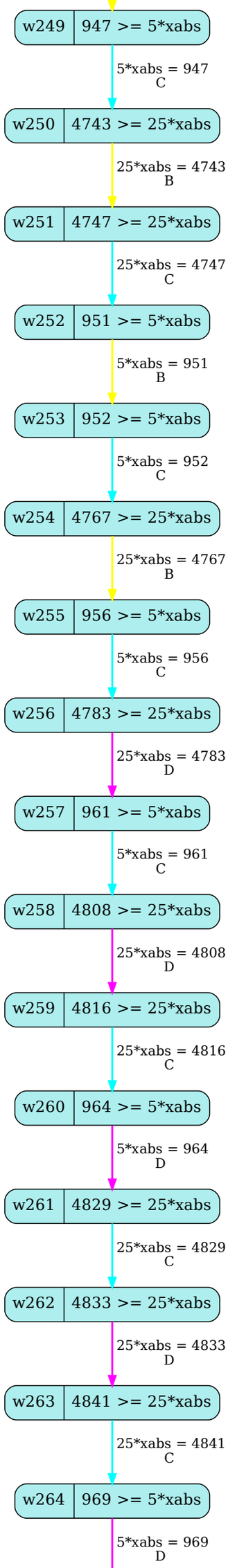
w249
947 >= 5*xabs
5*xabs = 947
C
w250
4743 >= 25*xabs
25*xabs = 4743
B
w251
4747 >= 25*xabs
25*xabs = 4747
C
w252
951 >= 5*xabs
5*xabs = 951
B
w253
952 >= 5*xabs
5*xabs = 952
C
w254
4767 >= 25*xabs
25*xabs = 4767
B
w255
956 >= 5*xabs
5*xabs = 956
C
w256
4783 >= 25*xabs
25*xabs = 4783
D
w257
961 >= 5*xabs
5*xabs = 961
C
w258
4808 >= 25*xabs
25*xabs = 4808
D
w259
4816 >= 25*xabs
25*xabs = 4816
C
w260
964 >= 5*xabs
5*xabs = 964
D
w261
4829 >= 25*xabs
25*xabs = 4829
C
w262
4833 >= 25*xabs
25*xabs = 4833
D
w263
4841 >= 25*xabs
25*xabs = 4841
C
w264
969 >= 5*xabs
5*xabs = 969
D

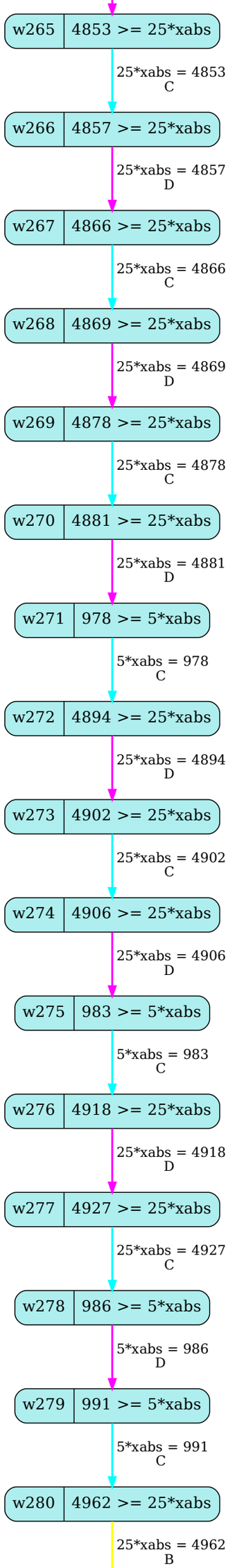
w265
4853 >= 25*xabs
25*xabs = 4853
C
w266
4857 >= 25*xabs
25*xabs = 4857
D
w267
4866 >= 25*xabs
25*xabs = 4866
C
w268
4869 >= 25*xabs
25*xabs = 4869
D
w269
4878 >= 25*xabs
25*xabs = 4878
C
w270
4881 >= 25*xabs
25*xabs = 4881
D
w271
978 >= 5*xabs
5*xabs = 978
C
w272
4894 >= 25*xabs
25*xabs = 4894
D
w273
4902 >= 25*xabs
25*xabs = 4902
C
w274
4906 >= 25*xabs
25*xabs = 4906
D
w275
983 >= 5*xabs
5*xabs = 983
C
w276
4918 >= 25*xabs
25*xabs = 4918
D
w277
4927 >= 25*xabs
25*xabs = 4927
C
w278
986 >= 5*xabs
5*xabs = 986
D
w279
991 >= 5*xabs
5*xabs = 991
C
w280
4962 >= 25*xabs
25*xabs = 4962
B

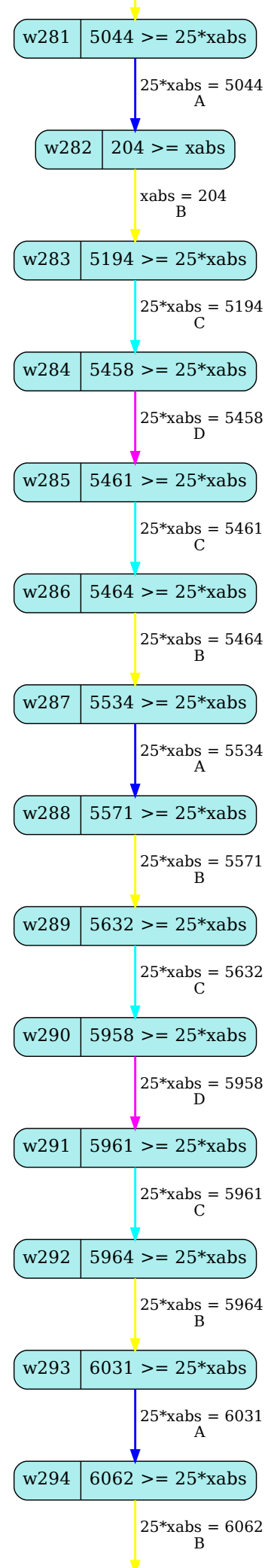
w281
5044 >= 25*xabs
25*xabs = 5044
A
w282
204 >= xabs
xabs = 204
B
w283
5194 >= 25*xabs
25*xabs = 5194
C
w284
5458 >= 25*xabs
25*xabs = 5458
D
w285
5461 >= 25*xabs
25*xabs = 5461
C
w286
5464 >= 25*xabs
25*xabs = 5464
B
w287
5534 >= 25*xabs
25*xabs = 5534
A
w288
5571 >= 25*xabs
25*xabs = 5571
B
w289
5632 >= 25*xabs
25*xabs = 5632
C
w290
5958 >= 25*xabs
25*xabs = 5958
D
w291
5961 >= 25*xabs
25*xabs = 5961
C
w292
5964 >= 25*xabs
25*xabs = 5964
B
w293
6031 >= 25*xabs
25*xabs = 6031
A
w294
6062 >= 25*xabs
25*xabs = 6062
B

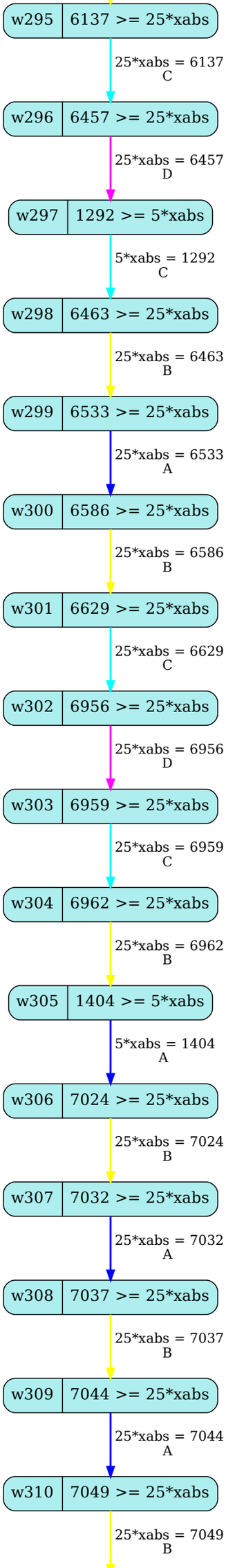
w295
6137 >= 25*xabs
25*xabs = 6137
C
w296
6457 >= 25*xabs
25*xabs = 6457
D
w297
1292 >= 5*xabs
5*xabs = 1292
C
w298
6463 >= 25*xabs
25*xabs = 6463
B
w299
6533 >= 25*xabs
25*xabs = 6533
A
w300
6586 >= 25*xabs
25*xabs = 6586
B
w301
6629 >= 25*xabs
25*xabs = 6629
C
w302
6956 >= 25*xabs
25*xabs = 6956
D
w303
6959 >= 25*xabs
25*xabs = 6959
C
w304
6962 >= 25*xabs
25*xabs = 6962
B
w305
1404 >= 5*xabs
5*xabs = 1404
A
w306
7024 >= 25*xabs
25*xabs = 7024
B
w307
7032 >= 25*xabs
25*xabs = 7032
A
w308
7037 >= 25*xabs
25*xabs = 7037
B
w309
7044 >= 25*xabs
25*xabs = 7044
A
w310
7049 >= 25*xabs
25*xabs = 7049
B

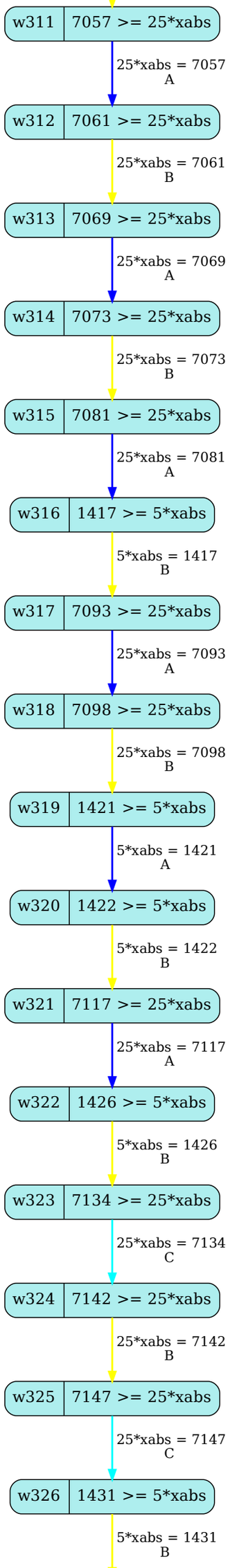
w311
7057 >= 25*xabs
25*xabs = 7057
A
w312
7061 >= 25*xabs
25*xabs = 7061
B
w313
7069 >= 25*xabs
25*xabs = 7069
A
w314
7073 >= 25*xabs
25*xabs = 7073
B
w315
7081 >= 25*xabs
25*xabs = 7081
A
w316
1417 >= 5*xabs
5*xabs = 1417
B
w317
7093 >= 25*xabs
25*xabs = 7093
A
w318
7098 >= 25*xabs
25*xabs = 7098
B
w319
1421 >= 5*xabs
5*xabs = 1421
A
w320
1422 >= 5*xabs
5*xabs = 1422
B
w321
7117 >= 25*xabs
25*xabs = 7117
A
w322
1426 >= 5*xabs
5*xabs = 1426
B
w323
7134 >= 25*xabs
25*xabs = 7134
C
w324
7142 >= 25*xabs
25*xabs = 7142
B
w325
7147 >= 25*xabs
25*xabs = 7147
C
w326
1431 >= 5*xabs
5*xabs = 1431
B

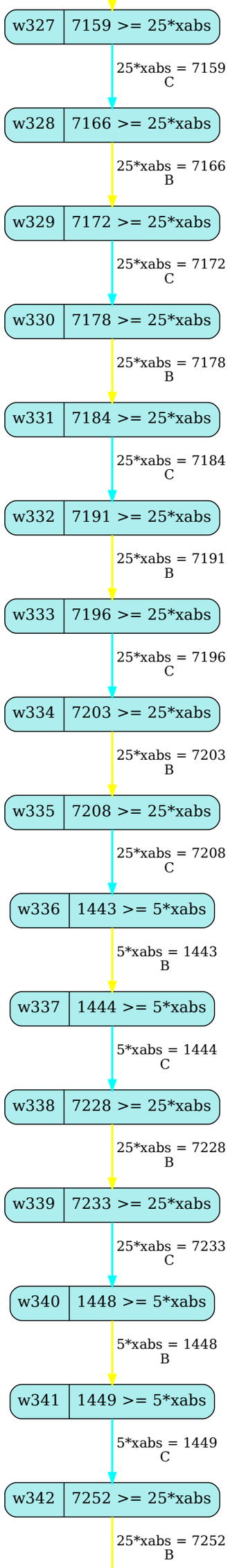
w327
7159 >= 25*xabs
25*xabs = 7159
C
w328
7166 >= 25*xabs
25*xabs = 7166
B
w329
7172 >= 25*xabs
25*xabs = 7172
C
w330
7178 >= 25*xabs
25*xabs = 7178
B
w331
7184 >= 25*xabs
25*xabs = 7184
C
w332
7191 >= 25*xabs
25*xabs = 7191
B
w333
7196 >= 25*xabs
25*xabs = 7196
C
w334
7203 >= 25*xabs
25*xabs = 7203
B
w335
7208 >= 25*xabs
25*xabs = 7208
C
w336
1443 >= 5*xabs
5*xabs = 1443
B
w337
1444 >= 5*xabs
5*xabs = 1444
C
w338
7228 >= 25*xabs
25*xabs = 7228
B
w339
7233 >= 25*xabs
25*xabs = 7233
C
w340
1448 >= 5*xabs
5*xabs = 1448
B
w341
1449 >= 5*xabs
5*xabs = 1449
C
w342
7252 >= 25*xabs
25*xabs = 7252
B

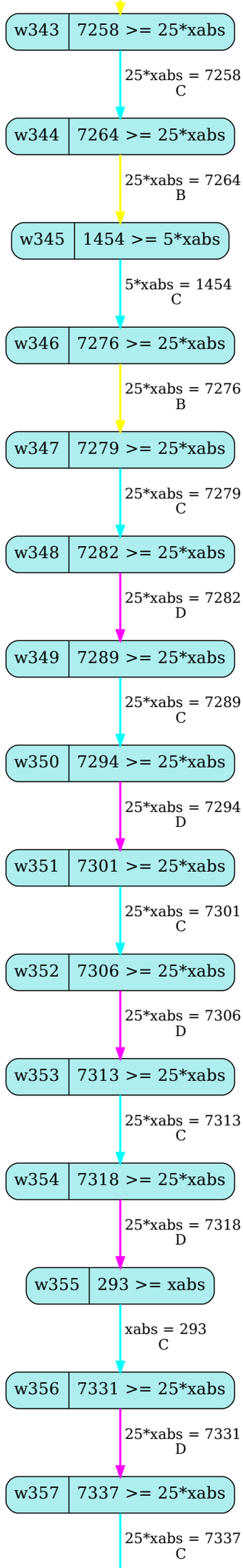
w343
7258 >= 25*xabs
25*xabs = 7258
C
w344
7264 >= 25*xabs
25*xabs = 7264
B
w345
1454 >= 5*xabs
5*xabs = 1454
C
w346
7276 >= 25*xabs
25*xabs = 7276
B
w347
7279 >= 25*xabs
25*xabs = 7279
C
w348
7282 >= 25*xabs
25*xabs = 7282
D
w349
7289 >= 25*xabs
25*xabs = 7289
C
w350
7294 >= 25*xabs
25*xabs = 7294
D
w351
7301 >= 25*xabs
25*xabs = 7301
C
w352
7306 >= 25*xabs
25*xabs = 7306
D
w353
7313 >= 25*xabs
25*xabs = 7313
C
w354
7318 >= 25*xabs
25*xabs = 7318
D
w355
293 >= xabs
xabs = 293
C
w356
7331 >= 25*xabs
25*xabs = 7331
D
w357
7337 >= 25*xabs
25*xabs = 7337
C

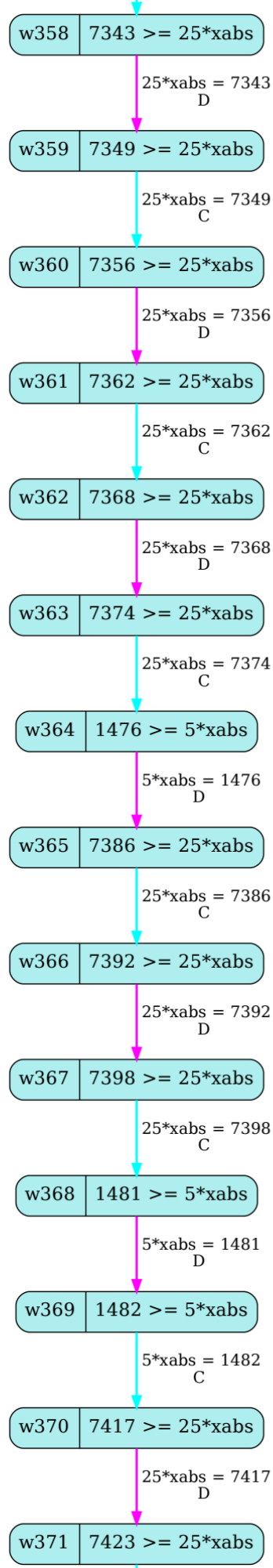
w358
7343 >= 25*xabs
25*xabs = 7343
D
w359
7349 >= 25*xabs
25*xabs = 7349
C
w360
7356 >= 25*xabs
25*xabs = 7356
D
w361
7362 >= 25*xabs
25*xabs = 7362
C
w362
7368 >= 25*xabs
25*xabs = 7368
D
w363
7374 >= 25*xabs
25*xabs = 7374
C
w364
1476 >= 5*xabs
5*xabs = 1476
D
w365
7386 >= 25*xabs
25*xabs = 7386
C
w366
7392 >= 25*xabs
25*xabs = 7392
D
w367
7398 >= 25*xabs
25*xabs = 7398
C
w368
1481 >= 5*xabs
5*xabs = 1481
D
w369
1482 >= 5*xabs
5*xabs = 1482
C
w370
7417 >= 25*xabs
25*xabs = 7417
D
w371
7423 >= 25*xabs

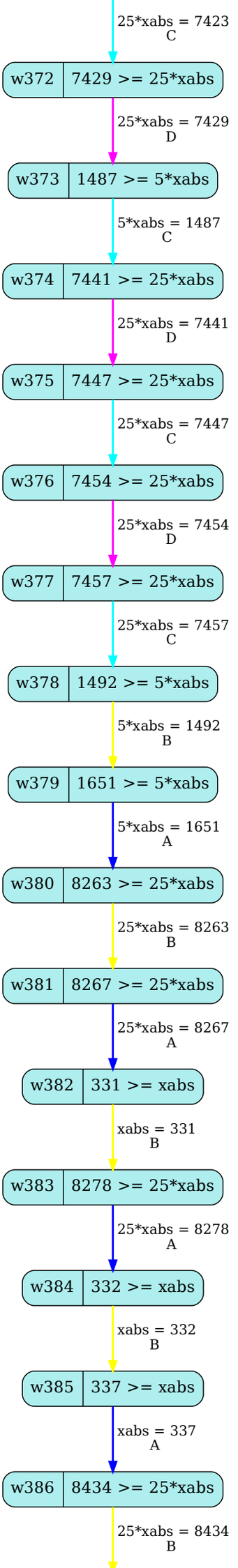
25*xabs = 7423
C
w372
7429 >= 25*xabs
25*xabs = 7429
D
w373
1487 >= 5*xabs
5*xabs = 1487
C
w374
7441 >= 25*xabs
25*xabs = 7441
D
w375
7447 >= 25*xabs
25*xabs = 7447
C
w376
7454 >= 25*xabs
25*xabs = 7454
D
w377
7457 >= 25*xabs
25*xabs = 7457
C
w378
1492 >= 5*xabs
5*xabs = 1492
B
w379
1651 >= 5*xabs
5*xabs = 1651
A
w380
8263 >= 25*xabs
25*xabs = 8263
B
w381
8267 >= 25*xabs
25*xabs = 8267
A
w382
331 >= xabs
xabs = 331
B
w383
8278 >= 25*xabs
25*xabs = 8278
A
w384
332 >= xabs
xabs = 332
B
w385
337 >= xabs
xabs = 337
A
w386
8434 >= 25*xabs
25*xabs = 8434
B

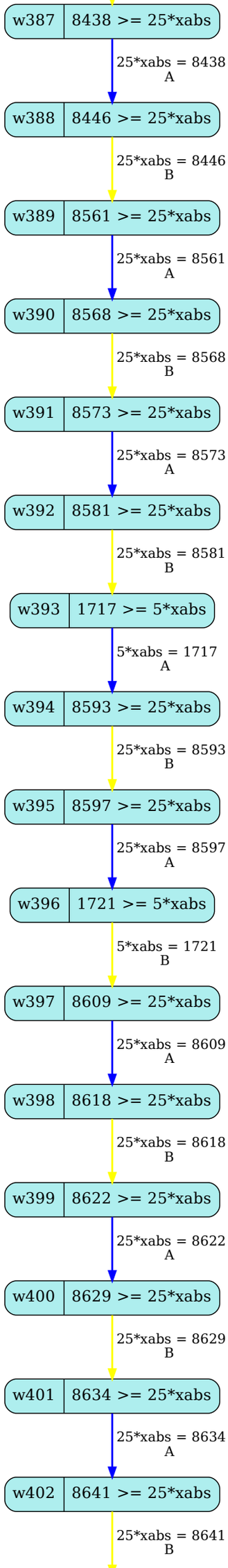
w387
8438 >= 25*xabs
25*xabs = 8438
A
w388
8446 >= 25*xabs
25*xabs = 8446
B
w389
8561 >= 25*xabs
25*xabs = 8561
A
w390
8568 >= 25*xabs
25*xabs = 8568
B
w391
8573 >= 25*xabs
25*xabs = 8573
A
w392
8581 >= 25*xabs
25*xabs = 8581
B
w393
1717 >= 5*xabs
5*xabs = 1717
A
w394
8593 >= 25*xabs
25*xabs = 8593
B
w395
8597 >= 25*xabs
25*xabs = 8597
A
w396
1721 >= 5*xabs
5*xabs = 1721
B
w397
8609 >= 25*xabs
25*xabs = 8609
A
w398
8618 >= 25*xabs
25*xabs = 8618
B
w399
8622 >= 25*xabs
25*xabs = 8622
A
w400
8629 >= 25*xabs
25*xabs = 8629
B
w401
8634 >= 25*xabs
25*xabs = 8634
A
w402
8641 >= 25*xabs
25*xabs = 8641
B

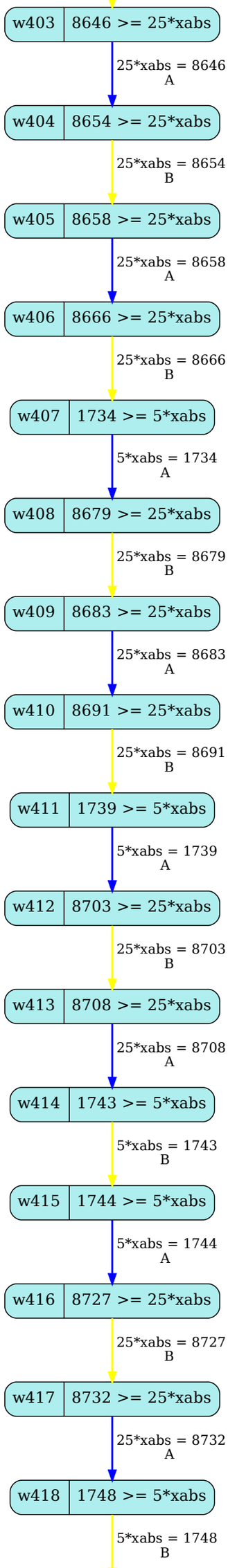
w403
8646 >= 25*xabs
25*xabs = 8646
A
w404
8654 >= 25*xabs
25*xabs = 8654
B
w405
8658 >= 25*xabs
25*xabs = 8658
A
w406
8666 >= 25*xabs
25*xabs = 8666
B
w407
1734 >= 5*xabs
5*xabs = 1734
A
w408
8679 >= 25*xabs
25*xabs = 8679
B
w409
8683 >= 25*xabs
25*xabs = 8683
A
w410
8691 >= 25*xabs
25*xabs = 8691
B
w411
1739 >= 5*xabs
5*xabs = 1739
A
w412
8703 >= 25*xabs
25*xabs = 8703
B
w413
8708 >= 25*xabs
25*xabs = 8708
A
w414
1743 >= 5*xabs
5*xabs = 1743
B
w415
1744 >= 5*xabs
5*xabs = 1744
A
w416
8727 >= 25*xabs
25*xabs = 8727
B
w417
8732 >= 25*xabs
25*xabs = 8732
A
w418
1748 >= 5*xabs
5*xabs = 1748
B

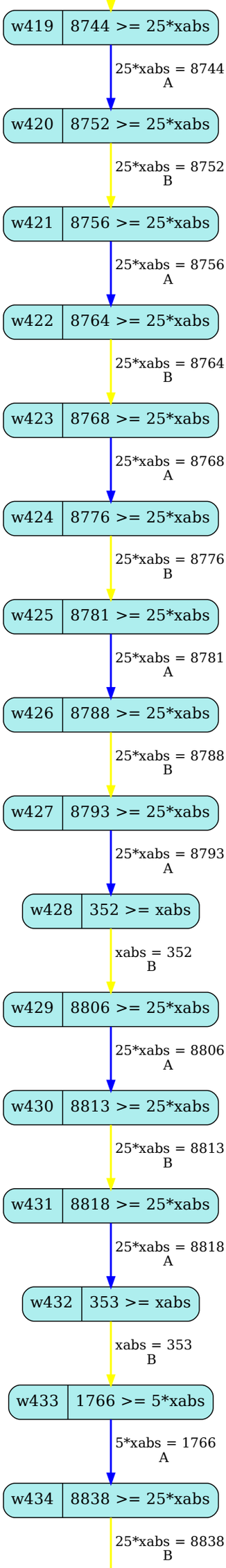
w419
8744 >= 25*xabs
25*xabs = 8744
A
w420
8752 >= 25*xabs
25*xabs = 8752
B
w421
8756 >= 25*xabs
25*xabs = 8756
A
w422
8764 >= 25*xabs
25*xabs = 8764
B
w423
8768 >= 25*xabs
25*xabs = 8768
A
w424
8776 >= 25*xabs
25*xabs = 8776
B
w425
8781 >= 25*xabs
25*xabs = 8781
A
w426
8788 >= 25*xabs
25*xabs = 8788
B
w427
8793 >= 25*xabs
25*xabs = 8793
A
w428
352 >= xabs
xabs = 352
B
w429
8806 >= 25*xabs
25*xabs = 8806
A
w430
8813 >= 25*xabs
25*xabs = 8813
B
w431
8818 >= 25*xabs
25*xabs = 8818
A
w432
353 >= xabs
xabs = 353
B
w433
1766 >= 5*xabs
5*xabs = 1766
A
w434
8838 >= 25*xabs
25*xabs = 8838
B

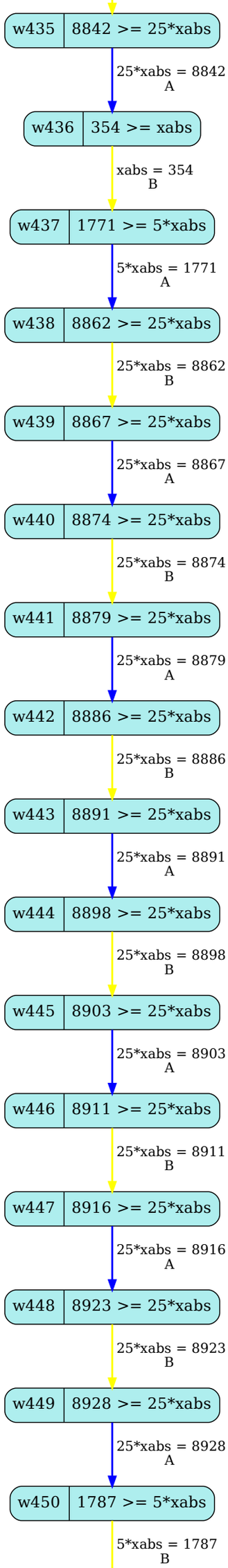
w435
8842 >= 25*xabs
25*xabs = 8842
A
w436
354 >= xabs
xabs = 354
B
w437
1771 >= 5*xabs
5*xabs = 1771
A
w438
8862 >= 25*xabs
25*xabs = 8862
B
w439
8867 >= 25*xabs
25*xabs = 8867
A
w440
8874 >= 25*xabs
25*xabs = 8874
B
w441
8879 >= 25*xabs
25*xabs = 8879
A
w442
8886 >= 25*xabs
25*xabs = 8886
B
w443
8891 >= 25*xabs
25*xabs = 8891
A
w444
8898 >= 25*xabs
25*xabs = 8898
B
w445
8903 >= 25*xabs
25*xabs = 8903
A
w446
8911 >= 25*xabs
25*xabs = 8911
B
w447
8916 >= 25*xabs
25*xabs = 8916
A
w448
8923 >= 25*xabs
25*xabs = 8923
B
w449
8928 >= 25*xabs
25*xabs = 8928
A
w450
1787 >= 5*xabs
5*xabs = 1787
B

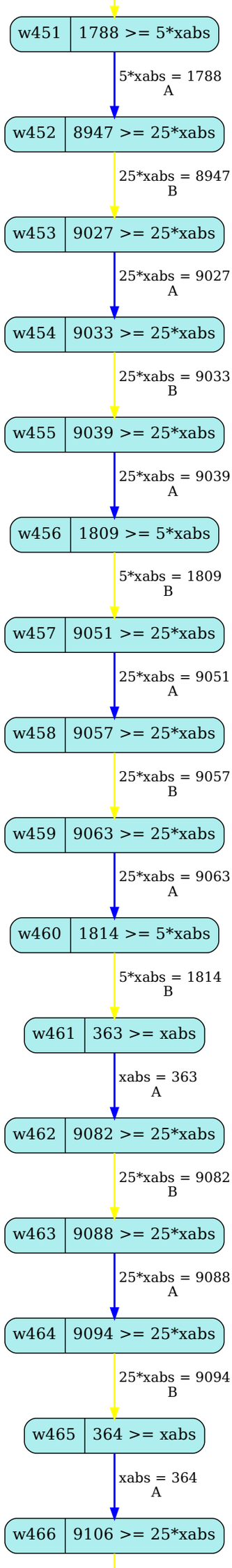
w451
1788 >= 5*xabs
5*xabs = 1788
A
w452
8947 >= 25*xabs
25*xabs = 8947
B
w453
9027 >= 25*xabs
25*xabs = 9027
A
w454
9033 >= 25*xabs
25*xabs = 9033
B
w455
9039 >= 25*xabs
25*xabs = 9039
A
w456
1809 >= 5*xabs
5*xabs = 1809
B
w457
9051 >= 25*xabs
25*xabs = 9051
A
w458
9057 >= 25*xabs
25*xabs = 9057
B
w459
9063 >= 25*xabs
25*xabs = 9063
A
w460
1814 >= 5*xabs
5*xabs = 1814
B
w461
363 >= xabs
xabs = 363
A
w462
9082 >= 25*xabs
25*xabs = 9082
B
w463
9088 >= 25*xabs
25*xabs = 9088
A
w464
9094 >= 25*xabs
25*xabs = 9094
B
w465
364 >= xabs
xabs = 364
A
w466
9106 >= 25*xabs

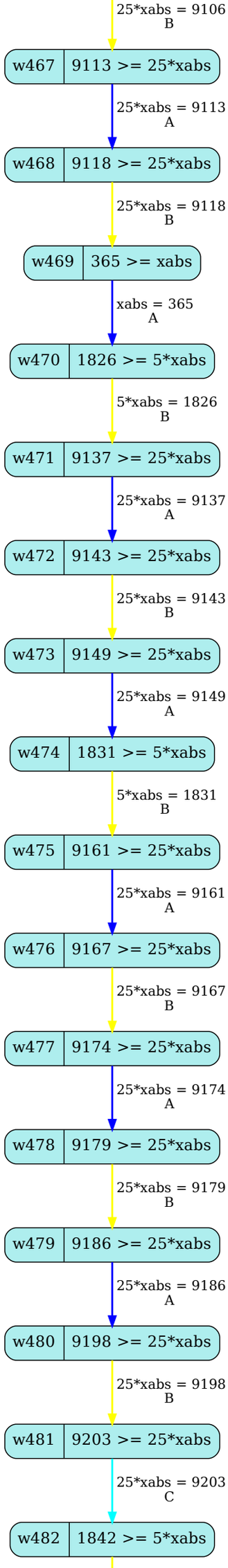
25*xabs = 9106
B
w467
9113 >= 25*xabs
25*xabs = 9113
A
w468
9118 >= 25*xabs
25*xabs = 9118
B
w469
365 >= xabs
xabs = 365
A
w470
1826 >= 5*xabs
5*xabs = 1826
B
w471
9137 >= 25*xabs
25*xabs = 9137
A
w472
9143 >= 25*xabs
25*xabs = 9143
B
w473
9149 >= 25*xabs
25*xabs = 9149
A
w474
1831 >= 5*xabs
5*xabs = 1831
B
w475
9161 >= 25*xabs
25*xabs = 9161
A
w476
9167 >= 25*xabs
25*xabs = 9167
B
w477
9174 >= 25*xabs
25*xabs = 9174
A
w478
9179 >= 25*xabs
25*xabs = 9179
B
w479
9186 >= 25*xabs
25*xabs = 9186
A
w480
9198 >= 25*xabs
25*xabs = 9198
B
w481
9203 >= 25*xabs
25*xabs = 9203
C
w482
1842 >= 5*xabs

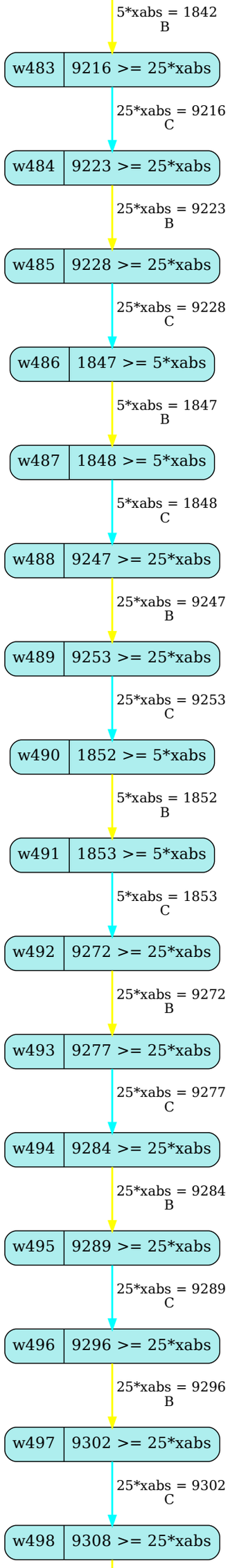
5*xabs = 1842
B
w483
9216 >= 25*xabs
25*xabs = 9216
C
w484
9223 >= 25*xabs
25*xabs = 9223
B
w485
9228 >= 25*xabs
25*xabs = 9228
C
w486
1847 >= 5*xabs
5*xabs = 1847
B
w487
1848 >= 5*xabs
5*xabs = 1848
C
w488
9247 >= 25*xabs
25*xabs = 9247
B
w489
9253 >= 25*xabs
25*xabs = 9253
C
w490
1852 >= 5*xabs
5*xabs = 1852
B
w491
1853 >= 5*xabs
5*xabs = 1853
C
w492
9272 >= 25*xabs
25*xabs = 9272
B
w493
9277 >= 25*xabs
25*xabs = 9277
C
w494
9284 >= 25*xabs
25*xabs = 9284
B
w495
9289 >= 25*xabs
25*xabs = 9289
C
w496
9296 >= 25*xabs
25*xabs = 9296
B
w497
9302 >= 25*xabs
25*xabs = 9302
C
w498
9308 >= 25*xabs

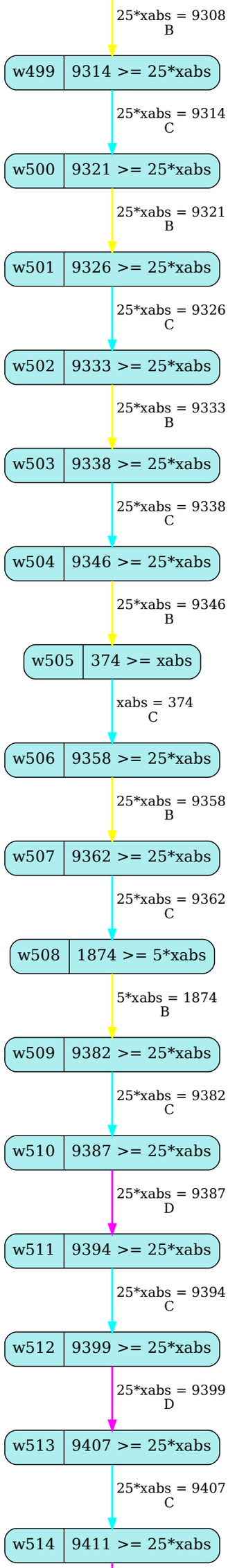
25*xabs = 9308
B
w499
9314 >= 25*xabs
25*xabs = 9314
C
w500
9321 >= 25*xabs
25*xabs = 9321
B
w501
9326 >= 25*xabs
25*xabs = 9326
C
w502
9333 >= 25*xabs
25*xabs = 9333
B
w503
9338 >= 25*xabs
25*xabs = 9338
C
w504
9346 >= 25*xabs
25*xabs = 9346
B
w505
374 >= xabs
xabs = 374
C
w506
9358 >= 25*xabs
25*xabs = 9358
B
w507
9362 >= 25*xabs
25*xabs = 9362
C
w508
1874 >= 5*xabs
5*xabs = 1874
B
w509
9382 >= 25*xabs
25*xabs = 9382
C
w510
9387 >= 25*xabs
25*xabs = 9387
D
w511
9394 >= 25*xabs
25*xabs = 9394
C
w512
9399 >= 25*xabs
25*xabs = 9399
D
w513
9407 >= 25*xabs
25*xabs = 9407
C
w514
9411 >= 25*xabs

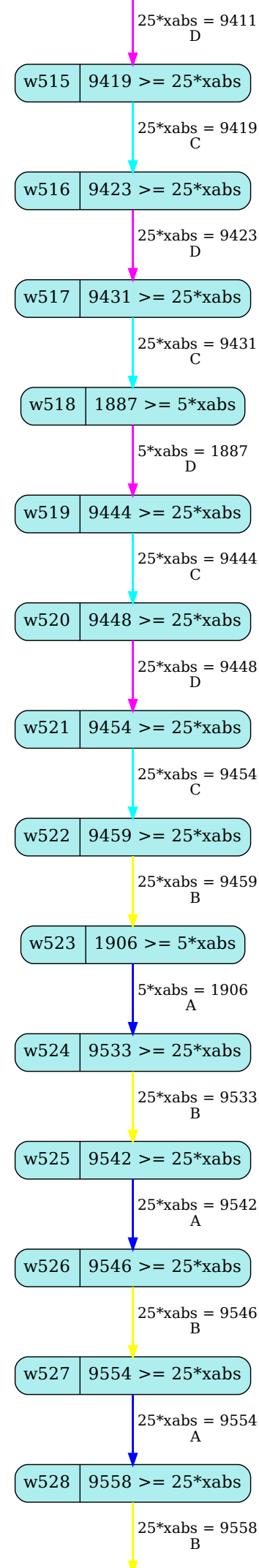
25*xabs = 9411
D
w515
9419 >= 25*xabs
25*xabs = 9419
C
w516
9423 >= 25*xabs
25*xabs = 9423
D
w517
9431 >= 25*xabs
25*xabs = 9431
C
w518
1887 >= 5*xabs
5*xabs = 1887
D
w519
9444 >= 25*xabs
25*xabs = 9444
C
w520
9448 >= 25*xabs
25*xabs = 9448
D
w521
9454 >= 25*xabs
25*xabs = 9454
C
w522
9459 >= 25*xabs
25*xabs = 9459
B
w523
1906 >= 5*xabs
5*xabs = 1906
A
w524
9533 >= 25*xabs
25*xabs = 9533
B
w525
9542 >= 25*xabs
25*xabs = 9542
A
w526
9546 >= 25*xabs
25*xabs = 9546
B
w527
9554 >= 25*xabs
25*xabs = 9554
A
w528
9558 >= 25*xabs
25*xabs = 9558
B

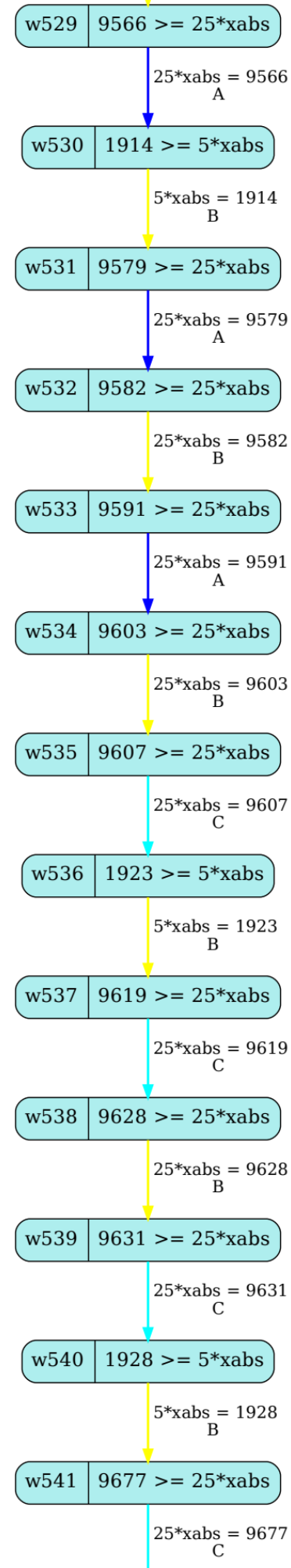
w529
9566 >= 25*xabs
25*xabs = 9566
A
w530
1914 >= 5*xabs
5*xabs = 1914
B
w531
9579 >= 25*xabs
25*xabs = 9579
A
w532
9582 >= 25*xabs
25*xabs = 9582
B
w533
9591 >= 25*xabs
25*xabs = 9591
A
w534
9603 >= 25*xabs
25*xabs = 9603
B
w535
9607 >= 25*xabs
25*xabs = 9607
C
w536
1923 >= 5*xabs
5*xabs = 1923
B
w537
9619 >= 25*xabs
25*xabs = 9619
C
w538
9628 >= 25*xabs
25*xabs = 9628
B
w539
9631 >= 25*xabs
25*xabs = 9631
C
w540
1928 >= 5*xabs
5*xabs = 1928
B
w541
9677 >= 25*xabs
25*xabs = 9677
C

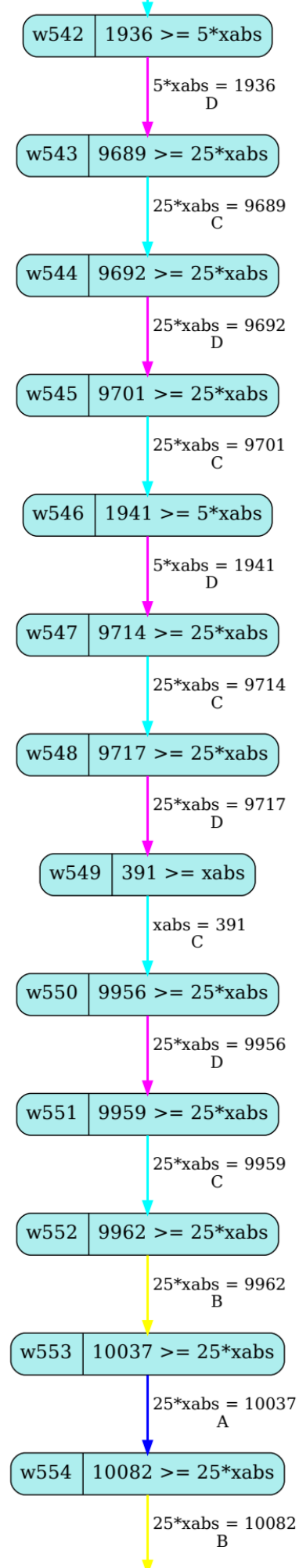
w542
1936 >= 5*xabs
5*xabs = 1936
D
w543
9689 >= 25*xabs
25*xabs = 9689
C
w544
9692 >= 25*xabs
25*xabs = 9692
D
w545
9701 >= 25*xabs
25*xabs = 9701
C
w546
1941 >= 5*xabs
5*xabs = 1941
D
w547
9714 >= 25*xabs
25*xabs = 9714
C
w548
9717 >= 25*xabs
25*xabs = 9717
D
w549
391 >= xabs
xabs = 391
C
w550
9956 >= 25*xabs
25*xabs = 9956
D
w551
9959 >= 25*xabs
25*xabs = 9959
C
w552
9962 >= 25*xabs
25*xabs = 9962
B
w553
10037 >= 25*xabs
25*xabs = 10037
A
w554
10082 >= 25*xabs
25*xabs = 10082
B

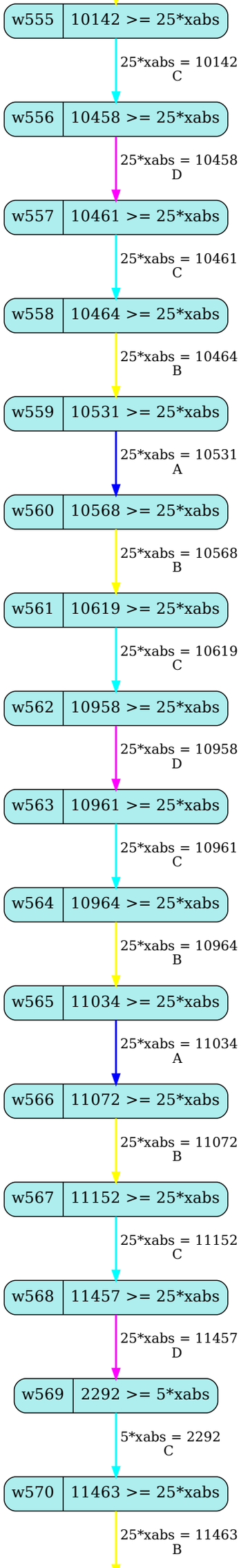
w555
10142 >= 25*xabs
25*xabs = 10142
C
w556
10458 >= 25*xabs
25*xabs = 10458
D
w557
10461 >= 25*xabs
25*xabs = 10461
C
w558
10464 >= 25*xabs
25*xabs = 10464
B
w559
10531 >= 25*xabs
25*xabs = 10531
A
w560
10568 >= 25*xabs
25*xabs = 10568
B
w561
10619 >= 25*xabs
25*xabs = 10619
C
w562
10958 >= 25*xabs
25*xabs = 10958
D
w563
10961 >= 25*xabs
25*xabs = 10961
C
w564
10964 >= 25*xabs
25*xabs = 10964
B
w565
11034 >= 25*xabs
25*xabs = 11034
A
w566
11072 >= 25*xabs
25*xabs = 11072
B
w567
11152 >= 25*xabs
25*xabs = 11152
C
w568
11457 >= 25*xabs
25*xabs = 11457
D
w569
2292 >= 5*xabs
5*xabs = 2292
C
w570
11463 >= 25*xabs
25*xabs = 11463
B

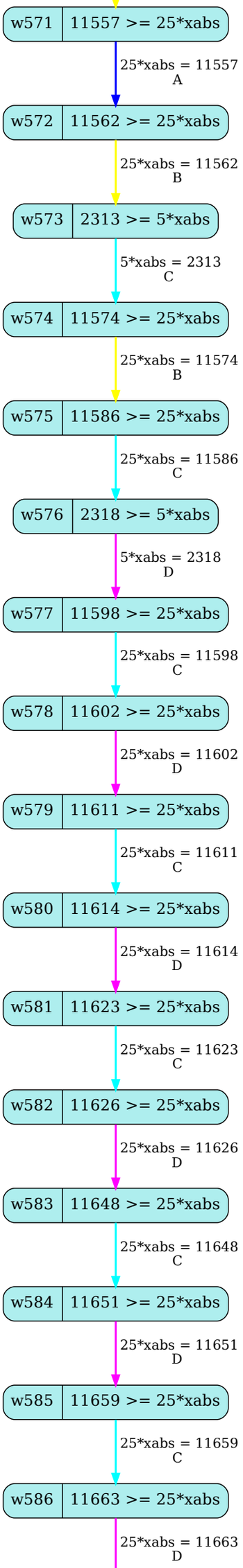
w571
11557 >= 25*xabs
25*xabs = 11557
A
w572
11562 >= 25*xabs
25*xabs = 11562
B
w573
2313 >= 5*xabs
5*xabs = 2313
C
w574
11574 >= 25*xabs
25*xabs = 11574
B
w575
11586 >= 25*xabs
25*xabs = 11586
C
w576
2318 >= 5*xabs
5*xabs = 2318
D
w577
11598 >= 25*xabs
25*xabs = 11598
C
w578
11602 >= 25*xabs
25*xabs = 11602
D
w579
11611 >= 25*xabs
25*xabs = 11611
C
w580
11614 >= 25*xabs
25*xabs = 11614
D
w581
11623 >= 25*xabs
25*xabs = 11623
C
w582
11626 >= 25*xabs
25*xabs = 11626
D
w583
11648 >= 25*xabs
25*xabs = 11648
C
w584
11651 >= 25*xabs
25*xabs = 11651
D
w585
11659 >= 25*xabs
25*xabs = 11659
C
w586
11663 >= 25*xabs
25*xabs = 11663
D

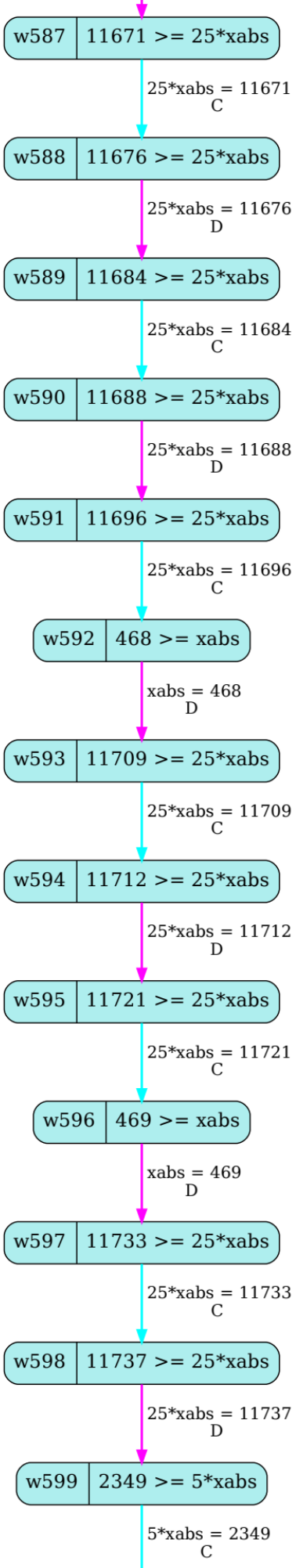
w587
11671 >= 25*xabs
25*xabs = 11671
C
w588
11676 >= 25*xabs
25*xabs = 11676
D
w589
11684 >= 25*xabs
25*xabs = 11684
C
w590
11688 >= 25*xabs
25*xabs = 11688
D
w591
11696 >= 25*xabs
25*xabs = 11696
C
w592
468 >= xabs
xabs = 468
D
w593
11709 >= 25*xabs
25*xabs = 11709
C
w594
11712 >= 25*xabs
25*xabs = 11712
D
w595
11721 >= 25*xabs
25*xabs = 11721
C
w596
469 >= xabs
xabs = 469
D
w597
11733 >= 25*xabs
25*xabs = 11733
C
w598
11737 >= 25*xabs
25*xabs = 11737
D
w599
2349 >= 5*xabs
5*xabs = 2349
C

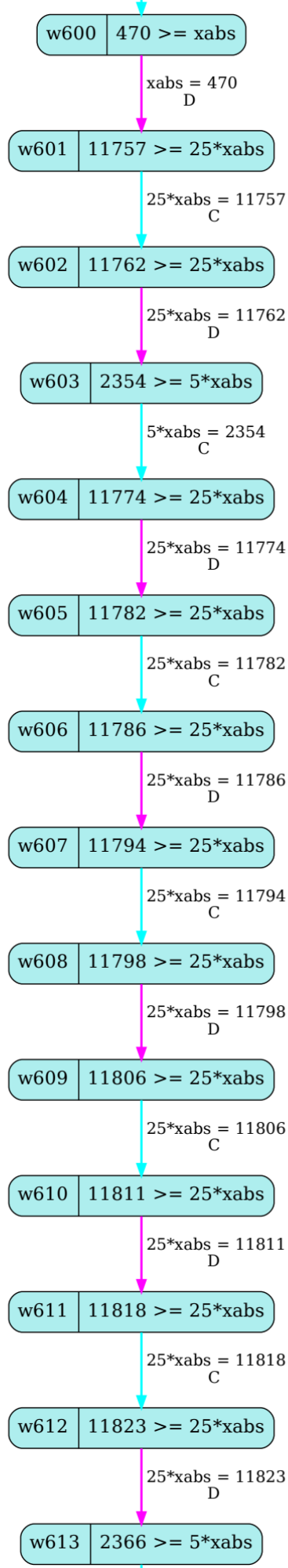
w600
470 >= xabs
xabs = 470
D
w601
11757 >= 25*xabs
25*xabs = 11757
C
w602
11762 >= 25*xabs
25*xabs = 11762
D
w603
2354 >= 5*xabs
5*xabs = 2354
C
w604
11774 >= 25*xabs
25*xabs = 11774
D
w605
11782 >= 25*xabs
25*xabs = 11782
C
w606
11786 >= 25*xabs
25*xabs = 11786
D
w607
11794 >= 25*xabs
25*xabs = 11794
C
w608
11798 >= 25*xabs
25*xabs = 11798
D
w609
11806 >= 25*xabs
25*xabs = 11806
C
w610
11811 >= 25*xabs
25*xabs = 11811
D
w611
11818 >= 25*xabs
25*xabs = 11818
C
w612
11823 >= 25*xabs
25*xabs = 11823
D
w613
2366 >= 5*xabs

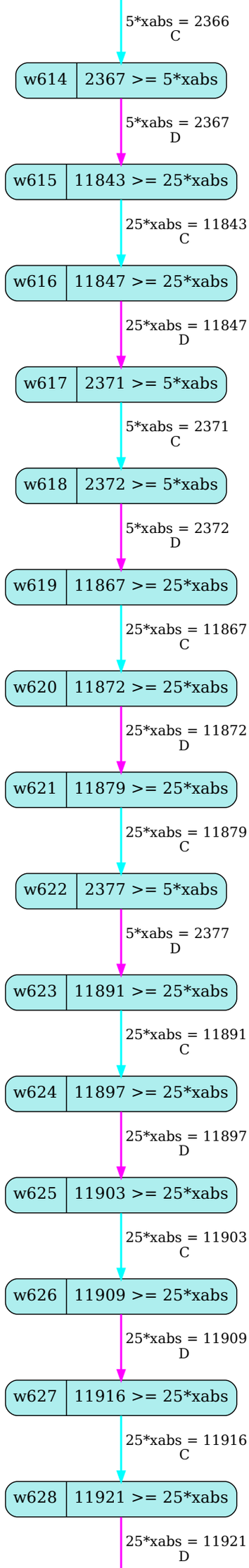
5*xabs = 2366
C
w614
2367 >= 5*xabs
5*xabs = 2367
D
w615
11843 >= 25*xabs
25*xabs = 11843
C
w616
11847 >= 25*xabs
25*xabs = 11847
D
w617
2371 >= 5*xabs
5*xabs = 2371
C
w618
2372 >= 5*xabs
5*xabs = 2372
D
w619
11867 >= 25*xabs
25*xabs = 11867
C
w620
11872 >= 25*xabs
25*xabs = 11872
D
w621
11879 >= 25*xabs
25*xabs = 11879
C
w622
2377 >= 5*xabs
5*xabs = 2377
D
w623
11891 >= 25*xabs
25*xabs = 11891
C
w624
11897 >= 25*xabs
25*xabs = 11897
D
w625
11903 >= 25*xabs
25*xabs = 11903
C
w626
11909 >= 25*xabs
25*xabs = 11909
D
w627
11916 >= 25*xabs
25*xabs = 11916
C
w628
11921 >= 25*xabs
25*xabs = 11921
D

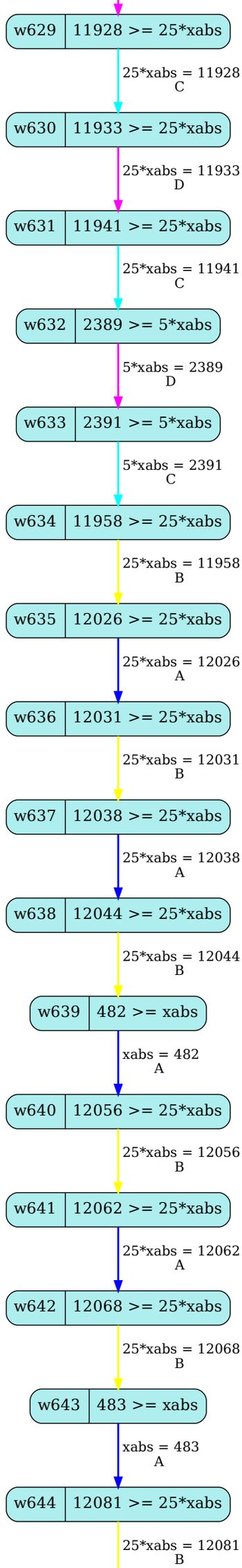
w629
11928 >= 25*xabs
25*xabs = 11928
C
w630
11933 >= 25*xabs
25*xabs = 11933
D
w631
11941 >= 25*xabs
25*xabs = 11941
C
w632
2389 >= 5*xabs
5*xabs = 2389
D
w633
2391 >= 5*xabs
5*xabs = 2391
C
w634
11958 >= 25*xabs
25*xabs = 11958
B
w635
12026 >= 25*xabs
25*xabs = 12026
A
w636
12031 >= 25*xabs
25*xabs = 12031
B
w637
12038 >= 25*xabs
25*xabs = 12038
A
w638
12044 >= 25*xabs
25*xabs = 12044
B
w639
482 >= xabs
xabs = 482
A
w640
12056 >= 25*xabs
25*xabs = 12056
B
w641
12062 >= 25*xabs
25*xabs = 12062
A
w642
12068 >= 25*xabs
25*xabs = 12068
B
w643
483 >= xabs
xabs = 483
A
w644
12081 >= 25*xabs
25*xabs = 12081
B

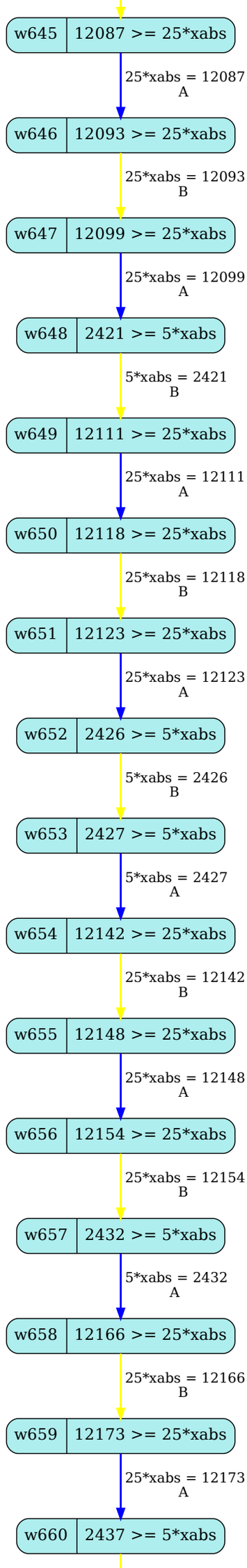
w645
12087 >= 25*xabs
25*xabs = 12087
A
w646
12093 >= 25*xabs
25*xabs = 12093
B
w647
12099 >= 25*xabs
25*xabs = 12099
A
w648
2421 >= 5*xabs
5*xabs = 2421
B
w649
12111 >= 25*xabs
25*xabs = 12111
A
w650
12118 >= 25*xabs
25*xabs = 12118
B
w651
12123 >= 25*xabs
25*xabs = 12123
A
w652
2426 >= 5*xabs
5*xabs = 2426
B
w653
2427 >= 5*xabs
5*xabs = 2427
A
w654
12142 >= 25*xabs
25*xabs = 12142
B
w655
12148 >= 25*xabs
25*xabs = 12148
A
w656
12154 >= 25*xabs
25*xabs = 12154
B
w657
2432 >= 5*xabs
5*xabs = 2432
A
w658
12166 >= 25*xabs
25*xabs = 12166
B
w659
12173 >= 25*xabs
25*xabs = 12173
A
w660
2437 >= 5*xabs

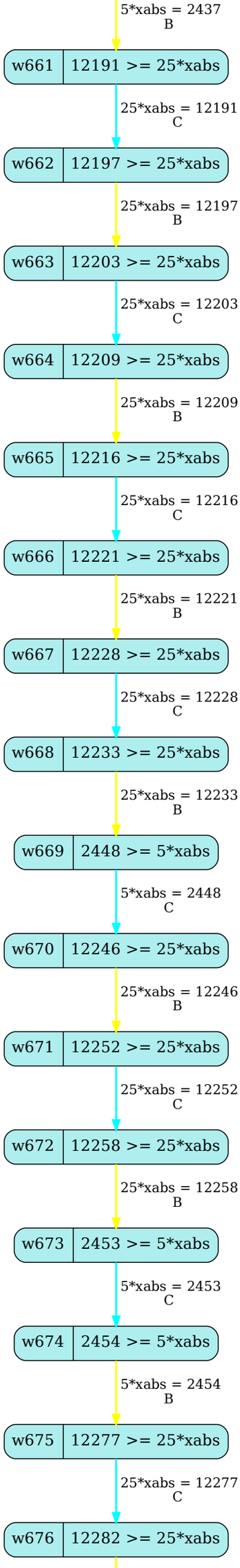
5*xabs = 2437
B
w661
12191 >= 25*xabs
25*xabs = 12191
C
w662
12197 >= 25*xabs
25*xabs = 12197
B
w663
12203 >= 25*xabs
25*xabs = 12203
C
w664
12209 >= 25*xabs
25*xabs = 12209
B
w665
12216 >= 25*xabs
25*xabs = 12216
C
w666
12221 >= 25*xabs
25*xabs = 12221
B
w667
12228 >= 25*xabs
25*xabs = 12228
C
w668
12233 >= 25*xabs
25*xabs = 12233
B
w669
2448 >= 5*xabs
5*xabs = 2448
C
w670
12246 >= 25*xabs
25*xabs = 12246
B
w671
12252 >= 25*xabs
25*xabs = 12252
C
w672
12258 >= 25*xabs
25*xabs = 12258
B
w673
2453 >= 5*xabs
5*xabs = 2453
C
w674
2454 >= 5*xabs
5*xabs = 2454
B
w675
12277 >= 25*xabs
25*xabs = 12277
C
w676
12282 >= 25*xabs

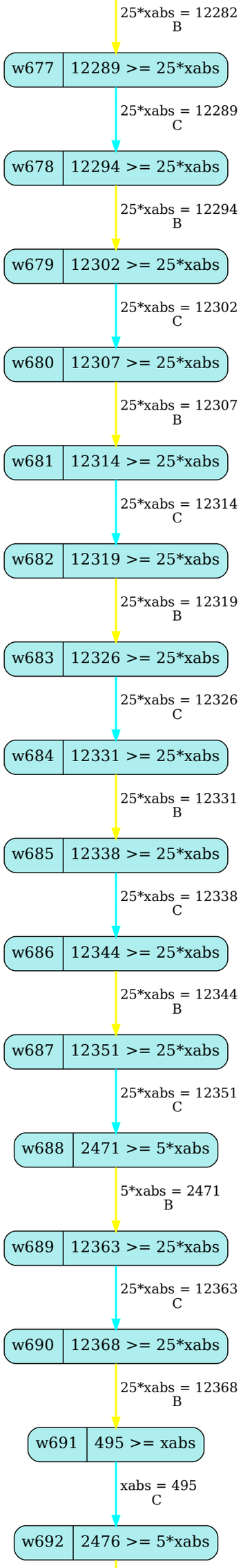
25*xabs = 12282
B
w677
12289 >= 25*xabs
25*xabs = 12289
C
w678
12294 >= 25*xabs
25*xabs = 12294
B
w679
12302 >= 25*xabs
25*xabs = 12302
C
w680
12307 >= 25*xabs
25*xabs = 12307
B
w681
12314 >= 25*xabs
25*xabs = 12314
C
w682
12319 >= 25*xabs
25*xabs = 12319
B
w683
12326 >= 25*xabs
25*xabs = 12326
C
w684
12331 >= 25*xabs
25*xabs = 12331
B
w685
12338 >= 25*xabs
25*xabs = 12338
C
w686
12344 >= 25*xabs
25*xabs = 12344
B
w687
12351 >= 25*xabs
25*xabs = 12351
C
w688
2471 >= 5*xabs
5*xabs = 2471
B
w689
12363 >= 25*xabs
25*xabs = 12363
C
w690
12368 >= 25*xabs
25*xabs = 12368
B
w691
495 >= xabs
xabs = 495
C
w692
2476 >= 5*xabs

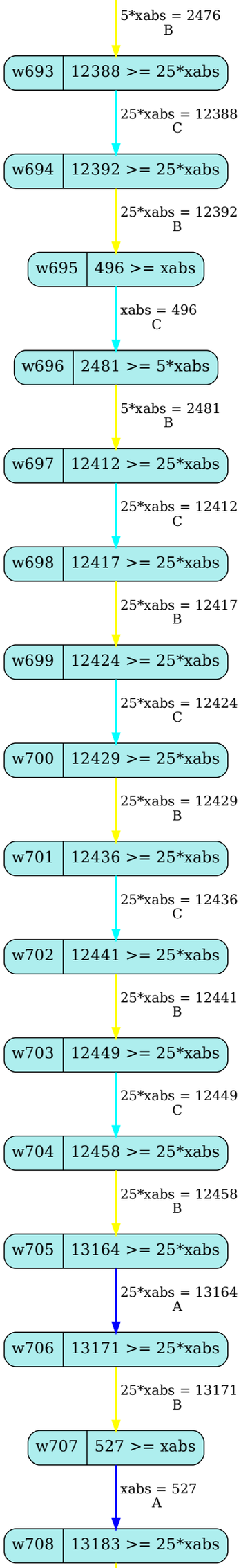
5*xabs = 2476
B
w693
12388 >= 25*xabs
25*xabs = 12388
C
w694
12392 >= 25*xabs
25*xabs = 12392
B
w695
496 >= xabs
xabs = 496
C
w696
2481 >= 5*xabs
5*xabs = 2481
B
w697
12412 >= 25*xabs
25*xabs = 12412
C
w698
12417 >= 25*xabs
25*xabs = 12417
B
w699
12424 >= 25*xabs
25*xabs = 12424
C
w700
12429 >= 25*xabs
25*xabs = 12429
B
w701
12436 >= 25*xabs
25*xabs = 12436
C
w702
12441 >= 25*xabs
25*xabs = 12441
B
w703
12449 >= 25*xabs
25*xabs = 12449
C
w704
12458 >= 25*xabs
25*xabs = 12458
B
w705
13164 >= 25*xabs
25*xabs = 13164
A
w706
13171 >= 25*xabs
25*xabs = 13171
B
w707
527 >= xabs
xabs = 527
A
w708
13183 >= 25*xabs

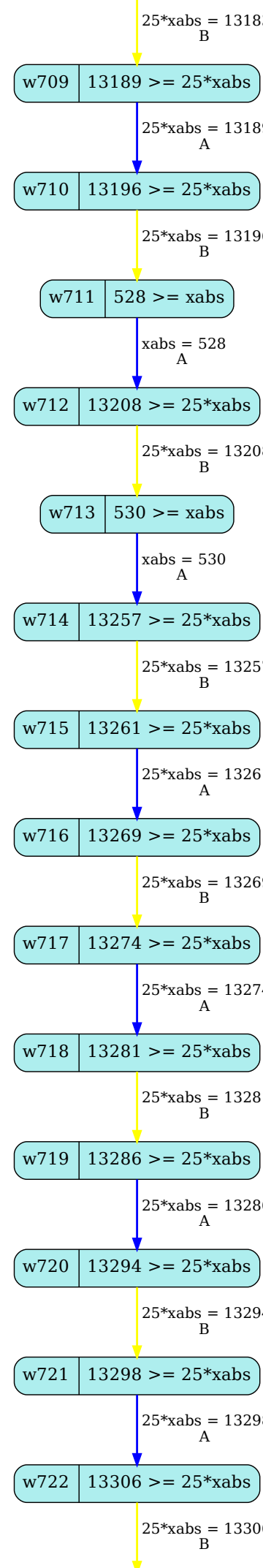
25*xabs = 13183
B
w709
13189 >= 25*xabs
25*xabs = 13189
A
w710
13196 >= 25*xabs
25*xabs = 13196
B
w711
528 >= xabs
xabs = 528
A
w712
13208 >= 25*xabs
25*xabs = 13208
B
w713
530 >= xabs
xabs = 530
A
w714
13257 >= 25*xabs
25*xabs = 13257
B
w715
13261 >= 25*xabs
25*xabs = 13261
A
w716
13269 >= 25*xabs
25*xabs = 13269
B
w717
13274 >= 25*xabs
25*xabs = 13274
A
w718
13281 >= 25*xabs
25*xabs = 13281
B
w719
13286 >= 25*xabs
25*xabs = 13286
A
w720
13294 >= 25*xabs
25*xabs = 13294
B
w721
13298 >= 25*xabs
25*xabs = 13298
A
w722
13306 >= 25*xabs
25*xabs = 13306
B

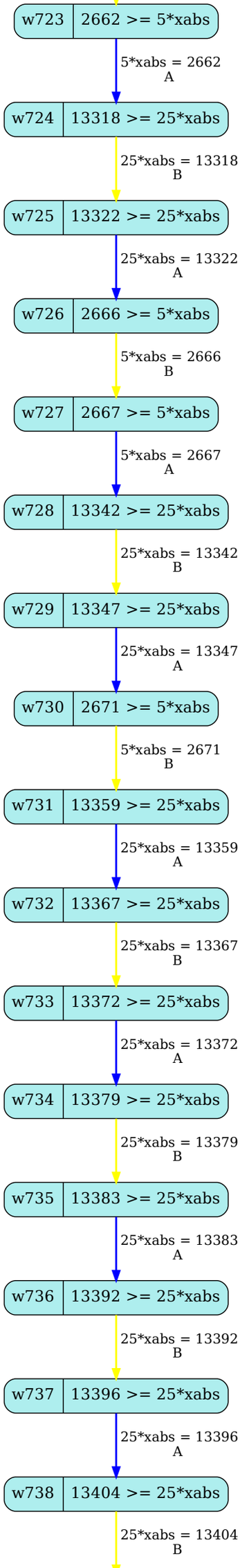
w723
2662 >= 5*xabs
5*xabs = 2662
A
w724
13318 >= 25*xabs
25*xabs = 13318
B
w725
13322 >= 25*xabs
25*xabs = 13322
A
w726
2666 >= 5*xabs
5*xabs = 2666
B
w727
2667 >= 5*xabs
5*xabs = 2667
A
w728
13342 >= 25*xabs
25*xabs = 13342
B
w729
13347 >= 25*xabs
25*xabs = 13347
A
w730
2671 >= 5*xabs
5*xabs = 2671
B
w731
13359 >= 25*xabs
25*xabs = 13359
A
w732
13367 >= 25*xabs
25*xabs = 13367
B
w733
13372 >= 25*xabs
25*xabs = 13372
A
w734
13379 >= 25*xabs
25*xabs = 13379
B
w735
13383 >= 25*xabs
25*xabs = 13383
A
w736
13392 >= 25*xabs
25*xabs = 13392
B
w737
13396 >= 25*xabs
25*xabs = 13396
A
w738
13404 >= 25*xabs
25*xabs = 13404
B

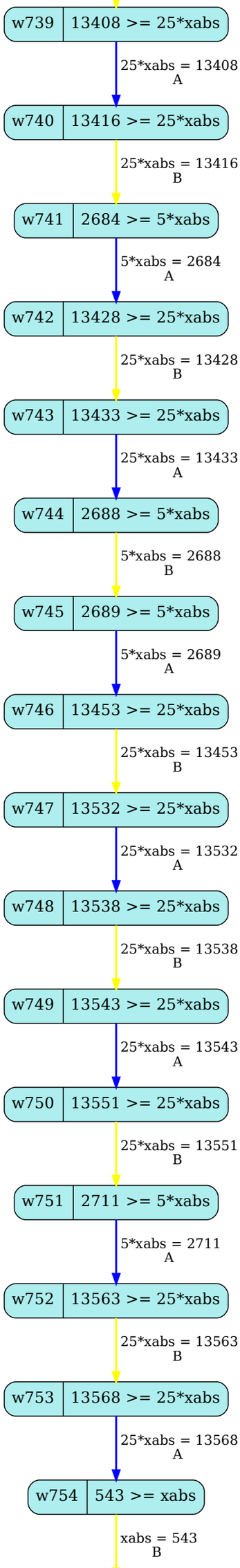
w739
13408 >= 25*xabs
25*xabs = 13408
A
w740
13416 >= 25*xabs
25*xabs = 13416
B
w741
2684 >= 5*xabs
5*xabs = 2684
A
w742
13428 >= 25*xabs
25*xabs = 13428
B
w743
13433 >= 25*xabs
25*xabs = 13433
A
w744
2688 >= 5*xabs
5*xabs = 2688
B
w745
2689 >= 5*xabs
5*xabs = 2689
A
w746
13453 >= 25*xabs
25*xabs = 13453
B
w747
13532 >= 25*xabs
25*xabs = 13532
A
w748
13538 >= 25*xabs
25*xabs = 13538
B
w749
13543 >= 25*xabs
25*xabs = 13543
A
w750
13551 >= 25*xabs
25*xabs = 13551
B
w751
2711 >= 5*xabs
5*xabs = 2711
A
w752
13563 >= 25*xabs
25*xabs = 13563
B
w753
13568 >= 25*xabs
25*xabs = 13568
A
w754
543 >= xabs
xabs = 543
B

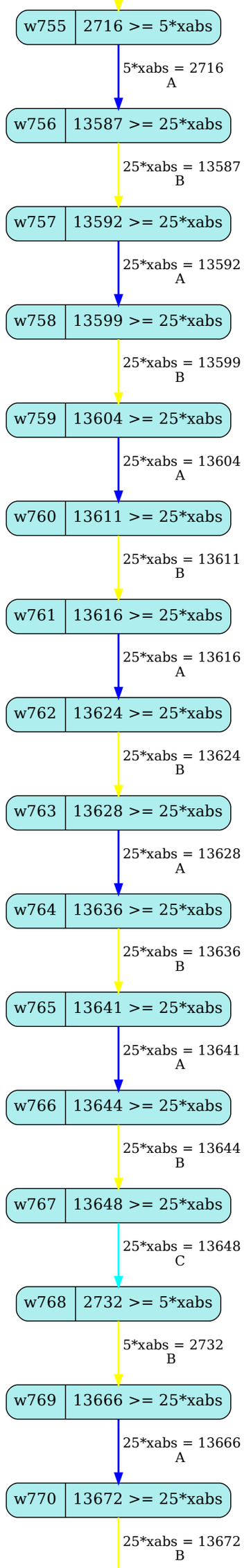
w755
2716 >= 5*xabs
5*xabs = 2716
A
w756
13587 >= 25*xabs
25*xabs = 13587
B
w757
13592 >= 25*xabs
25*xabs = 13592
A
w758
13599 >= 25*xabs
25*xabs = 13599
B
w759
13604 >= 25*xabs
25*xabs = 13604
A
w760
13611 >= 25*xabs
25*xabs = 13611
B
w761
13616 >= 25*xabs
25*xabs = 13616
A
w762
13624 >= 25*xabs
25*xabs = 13624
B
w763
13628 >= 25*xabs
25*xabs = 13628
A
w764
13636 >= 25*xabs
25*xabs = 13636
B
w765
13641 >= 25*xabs
25*xabs = 13641
A
w766
13644 >= 25*xabs
25*xabs = 13644
B
w767
13648 >= 25*xabs
25*xabs = 13648
C
w768
2732 >= 5*xabs
5*xabs = 2732
B
w769
13666 >= 25*xabs
25*xabs = 13666
A
w770
13672 >= 25*xabs
25*xabs = 13672
B

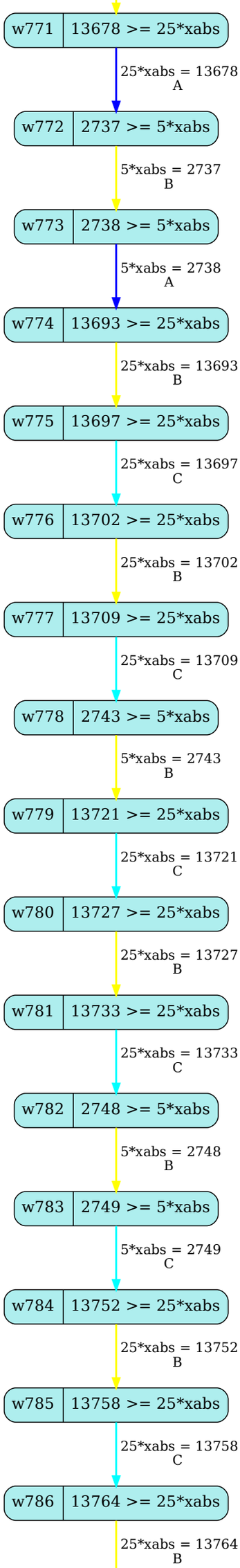
w771
13678 >= 25*xabs
25*xabs = 13678
A
w772
2737 >= 5*xabs
5*xabs = 2737
B
w773
2738 >= 5*xabs
5*xabs = 2738
A
w774
13693 >= 25*xabs
25*xabs = 13693
B
w775
13697 >= 25*xabs
25*xabs = 13697
C
w776
13702 >= 25*xabs
25*xabs = 13702
B
w777
13709 >= 25*xabs
25*xabs = 13709
C
w778
2743 >= 5*xabs
5*xabs = 2743
B
w779
13721 >= 25*xabs
25*xabs = 13721
C
w780
13727 >= 25*xabs
25*xabs = 13727
B
w781
13733 >= 25*xabs
25*xabs = 13733
C
w782
2748 >= 5*xabs
5*xabs = 2748
B
w783
2749 >= 5*xabs
5*xabs = 2749
C
w784
13752 >= 25*xabs
25*xabs = 13752
B
w785
13758 >= 25*xabs
25*xabs = 13758
C
w786
13764 >= 25*xabs
25*xabs = 13764
B

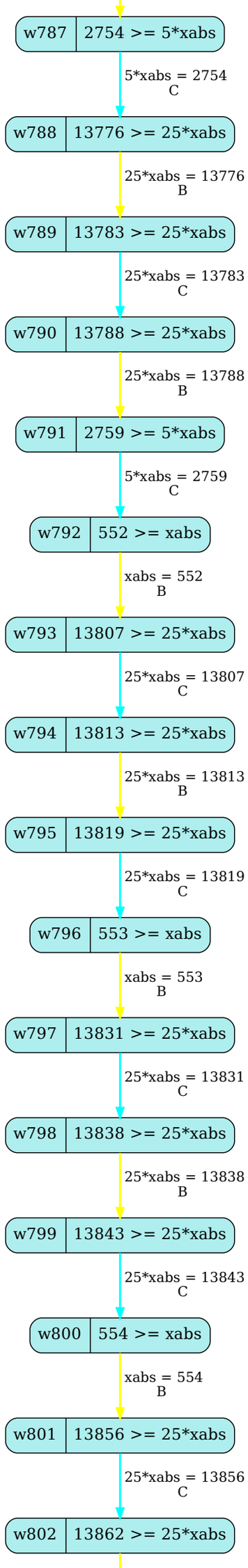
w787
2754 >= 5*xabs
5*xabs = 2754
C
w788
13776 >= 25*xabs
25*xabs = 13776
B
w789
13783 >= 25*xabs
25*xabs = 13783
C
w790
13788 >= 25*xabs
25*xabs = 13788
B
w791
2759 >= 5*xabs
5*xabs = 2759
C
w792
552 >= xabs
xabs = 552
B
w793
13807 >= 25*xabs
25*xabs = 13807
C
w794
13813 >= 25*xabs
25*xabs = 13813
B
w795
13819 >= 25*xabs
25*xabs = 13819
C
w796
553 >= xabs
xabs = 553
B
w797
13831 >= 25*xabs
25*xabs = 13831
C
w798
13838 >= 25*xabs
25*xabs = 13838
B
w799
13843 >= 25*xabs
25*xabs = 13843
C
w800
554 >= xabs
xabs = 554
B
w801
13856 >= 25*xabs
25*xabs = 13856
C
w802
13862 >= 25*xabs

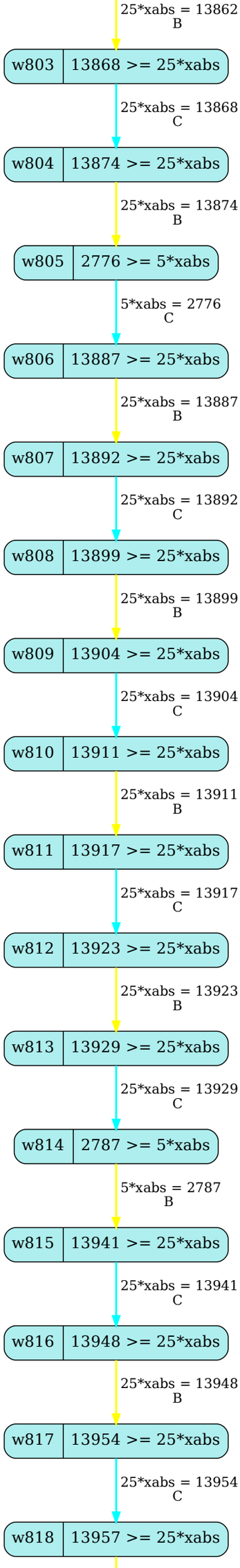
25*xabs = 13862
B
w803
13868 >= 25*xabs
25*xabs = 13868
C
w804
13874 >= 25*xabs
25*xabs = 13874
B
w805
2776 >= 5*xabs
5*xabs = 2776
C
w806
13887 >= 25*xabs
25*xabs = 13887
B
w807
13892 >= 25*xabs
25*xabs = 13892
C
w808
13899 >= 25*xabs
25*xabs = 13899
B
w809
13904 >= 25*xabs
25*xabs = 13904
C
w810
13911 >= 25*xabs
25*xabs = 13911
B
w811
13917 >= 25*xabs
25*xabs = 13917
C
w812
13923 >= 25*xabs
25*xabs = 13923
B
w813
13929 >= 25*xabs
25*xabs = 13929
C
w814
2787 >= 5*xabs
5*xabs = 2787
B
w815
13941 >= 25*xabs
25*xabs = 13941
C
w816
13948 >= 25*xabs
25*xabs = 13948
B
w817
13954 >= 25*xabs
25*xabs = 13954
C
w818
13957 >= 25*xabs

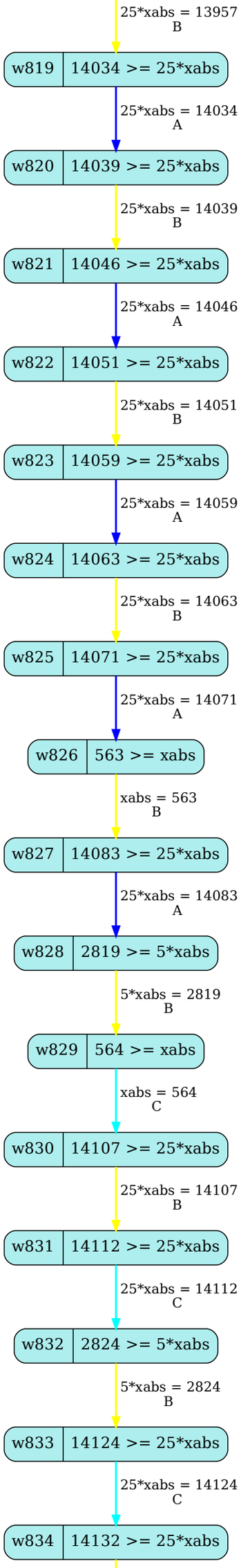
25*xabs = 13957
B
w819
14034 >= 25*xabs
25*xabs = 14034
A
w820
14039 >= 25*xabs
25*xabs = 14039
B
w821
14046 >= 25*xabs
25*xabs = 14046
A
w822
14051 >= 25*xabs
25*xabs = 14051
B
w823
14059 >= 25*xabs
25*xabs = 14059
A
w824
14063 >= 25*xabs
25*xabs = 14063
B
w825
14071 >= 25*xabs
25*xabs = 14071
A
w826
563 >= xabs
xabs = 563
B
w827
14083 >= 25*xabs
25*xabs = 14083
A
w828
2819 >= 5*xabs
5*xabs = 2819
B
w829
564 >= xabs
xabs = 564
C
w830
14107 >= 25*xabs
25*xabs = 14107
B
w831
14112 >= 25*xabs
25*xabs = 14112
C
w832
2824 >= 5*xabs
5*xabs = 2824
B
w833
14124 >= 25*xabs
25*xabs = 14124
C
w834
14132 >= 25*xabs

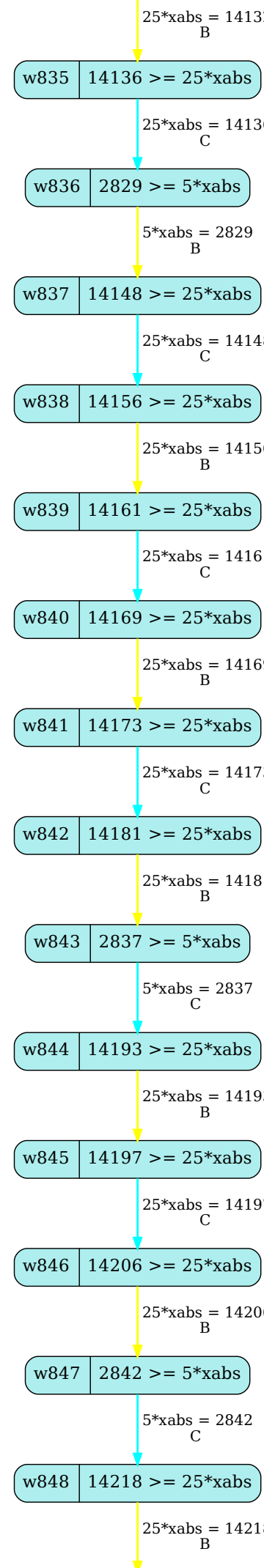
25*xabs = 14132
B
w835
14136 >= 25*xabs
25*xabs = 14136
C
w836
2829 >= 5*xabs
5*xabs = 2829
B
w837
14148 >= 25*xabs
25*xabs = 14148
C
w838
14156 >= 25*xabs
25*xabs = 14156
B
w839
14161 >= 25*xabs
25*xabs = 14161
C
w840
14169 >= 25*xabs
25*xabs = 14169
B
w841
14173 >= 25*xabs
25*xabs = 14173
C
w842
14181 >= 25*xabs
25*xabs = 14181
B
w843
2837 >= 5*xabs
5*xabs = 2837
C
w844
14193 >= 25*xabs
25*xabs = 14193
B
w845
14197 >= 25*xabs
25*xabs = 14197
C
w846
14206 >= 25*xabs
25*xabs = 14206
B
w847
2842 >= 5*xabs
5*xabs = 2842
C
w848
14218 >= 25*xabs
25*xabs = 14218
B

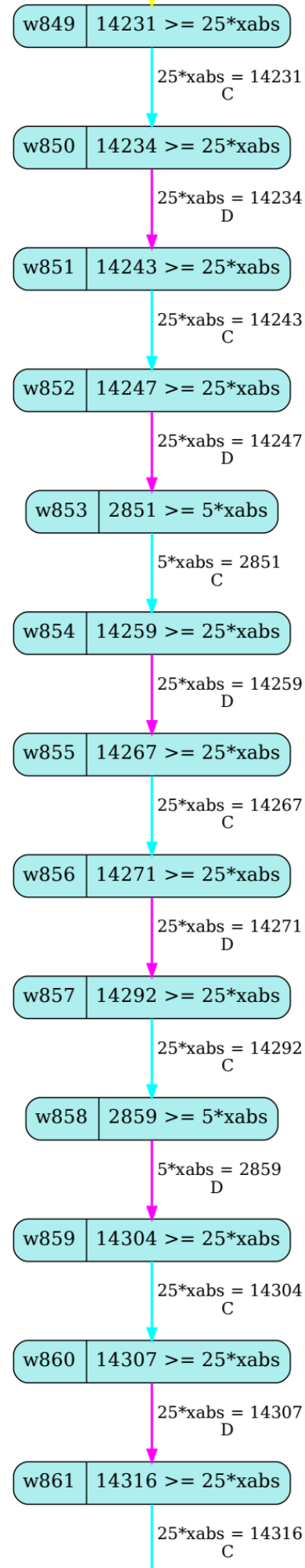
w849
14231 >= 25*xabs
25*xabs = 14231
C
w850
14234 >= 25*xabs
25*xabs = 14234
D
w851
14243 >= 25*xabs
25*xabs = 14243
C
w852
14247 >= 25*xabs
25*xabs = 14247
D
w853
2851 >= 5*xabs
5*xabs = 2851
C
w854
14259 >= 25*xabs
25*xabs = 14259
D
w855
14267 >= 25*xabs
25*xabs = 14267
C
w856
14271 >= 25*xabs
25*xabs = 14271
D
w857
14292 >= 25*xabs
25*xabs = 14292
C
w858
2859 >= 5*xabs
5*xabs = 2859
D
w859
14304 >= 25*xabs
25*xabs = 14304
C
w860
14307 >= 25*xabs
25*xabs = 14307
D
w861
14316 >= 25*xabs
25*xabs = 14316
C

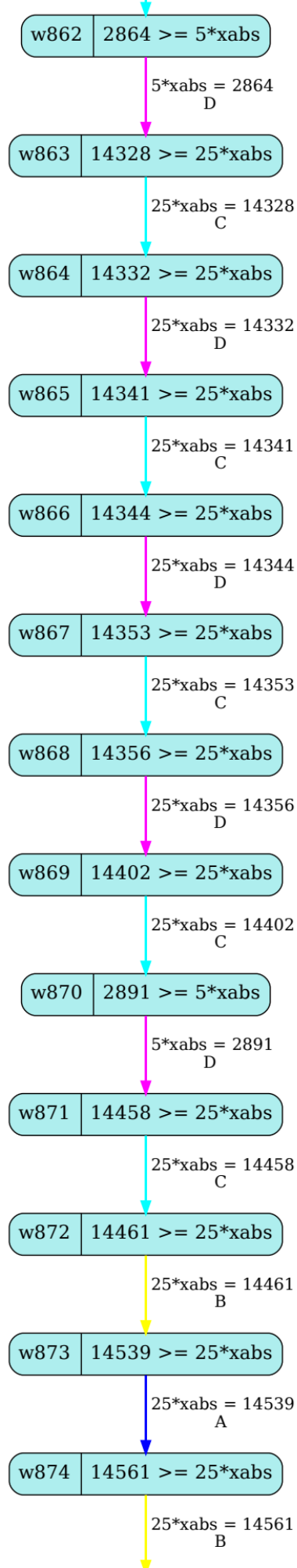
w862
2864 >= 5*xabs
5*xabs = 2864
D
w863
14328 >= 25*xabs
25*xabs = 14328
C
w864
14332 >= 25*xabs
25*xabs = 14332
D
w865
14341 >= 25*xabs
25*xabs = 14341
C
w866
14344 >= 25*xabs
25*xabs = 14344
D
w867
14353 >= 25*xabs
25*xabs = 14353
C
w868
14356 >= 25*xabs
25*xabs = 14356
D
w869
14402 >= 25*xabs
25*xabs = 14402
C
w870
2891 >= 5*xabs
5*xabs = 2891
D
w871
14458 >= 25*xabs
25*xabs = 14458
C
w872
14461 >= 25*xabs
25*xabs = 14461
B
w873
14539 >= 25*xabs
25*xabs = 14539
A
w874
14561 >= 25*xabs
25*xabs = 14561
B

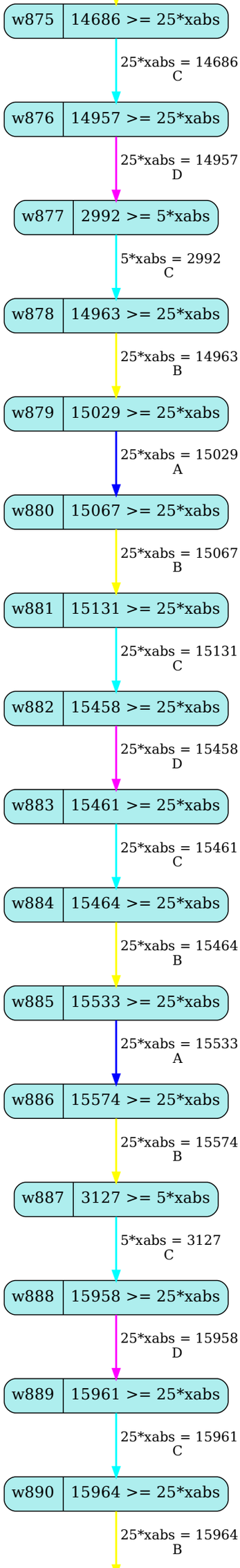
w875
14686 >= 25*xabs
25*xabs = 14686
C
w876
14957 >= 25*xabs
25*xabs = 14957
D
w877
2992 >= 5*xabs
5*xabs = 2992
C
w878
14963 >= 25*xabs
25*xabs = 14963
B
w879
15029 >= 25*xabs
25*xabs = 15029
A
w880
15067 >= 25*xabs
25*xabs = 15067
B
w881
15131 >= 25*xabs
25*xabs = 15131
C
w882
15458 >= 25*xabs
25*xabs = 15458
D
w883
15461 >= 25*xabs
25*xabs = 15461
C
w884
15464 >= 25*xabs
25*xabs = 15464
B
w885
15533 >= 25*xabs
25*xabs = 15533
A
w886
15574 >= 25*xabs
25*xabs = 15574
B
w887
3127 >= 5*xabs
5*xabs = 3127
C
w888
15958 >= 25*xabs
25*xabs = 15958
D
w889
15961 >= 25*xabs
25*xabs = 15961
C
w890
15964 >= 25*xabs
25*xabs = 15964
B

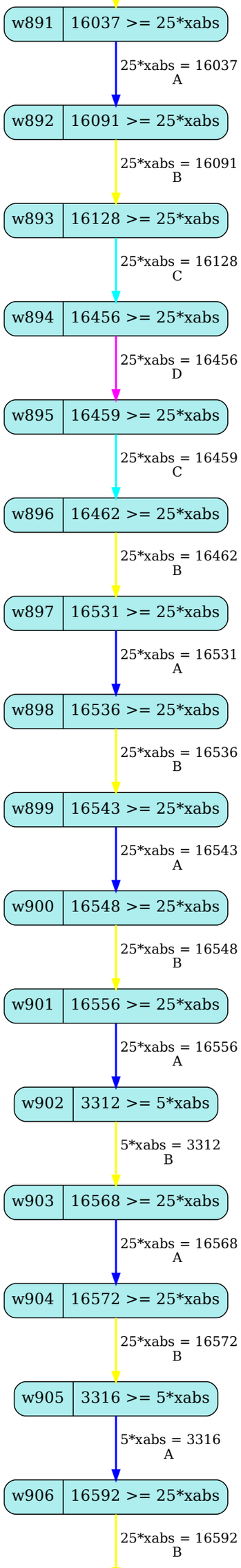
w891
16037 >= 25*xabs
25*xabs = 16037
A
w892
16091 >= 25*xabs
25*xabs = 16091
B
w893
16128 >= 25*xabs
25*xabs = 16128
C
w894
16456 >= 25*xabs
25*xabs = 16456
D
w895
16459 >= 25*xabs
25*xabs = 16459
C
w896
16462 >= 25*xabs
25*xabs = 16462
B
w897
16531 >= 25*xabs
25*xabs = 16531
A
w898
16536 >= 25*xabs
25*xabs = 16536
B
w899
16543 >= 25*xabs
25*xabs = 16543
A
w900
16548 >= 25*xabs
25*xabs = 16548
B
w901
16556 >= 25*xabs
25*xabs = 16556
A
w902
3312 >= 5*xabs
5*xabs = 3312
B
w903
16568 >= 25*xabs
25*xabs = 16568
A
w904
16572 >= 25*xabs
25*xabs = 16572
B
w905
3316 >= 5*xabs
5*xabs = 3316
A
w906
16592 >= 25*xabs
25*xabs = 16592
B

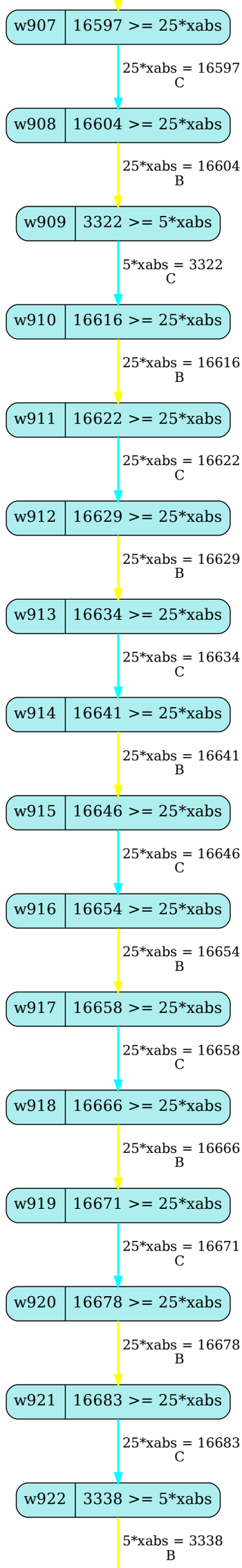
w907
16597 >= 25*xabs
25*xabs = 16597
C
w908
16604 >= 25*xabs
25*xabs = 16604
B
w909
3322 >= 5*xabs
5*xabs = 3322
C
w910
16616 >= 25*xabs
25*xabs = 16616
B
w911
16622 >= 25*xabs
25*xabs = 16622
C
w912
16629 >= 25*xabs
25*xabs = 16629
B
w913
16634 >= 25*xabs
25*xabs = 16634
C
w914
16641 >= 25*xabs
25*xabs = 16641
B
w915
16646 >= 25*xabs
25*xabs = 16646
C
w916
16654 >= 25*xabs
25*xabs = 16654
B
w917
16658 >= 25*xabs
25*xabs = 16658
C
w918
16666 >= 25*xabs
25*xabs = 16666
B
w919
16671 >= 25*xabs
25*xabs = 16671
C
w920
16678 >= 25*xabs
25*xabs = 16678
B
w921
16683 >= 25*xabs
25*xabs = 16683
C
w922
3338 >= 5*xabs
5*xabs = 3338
B

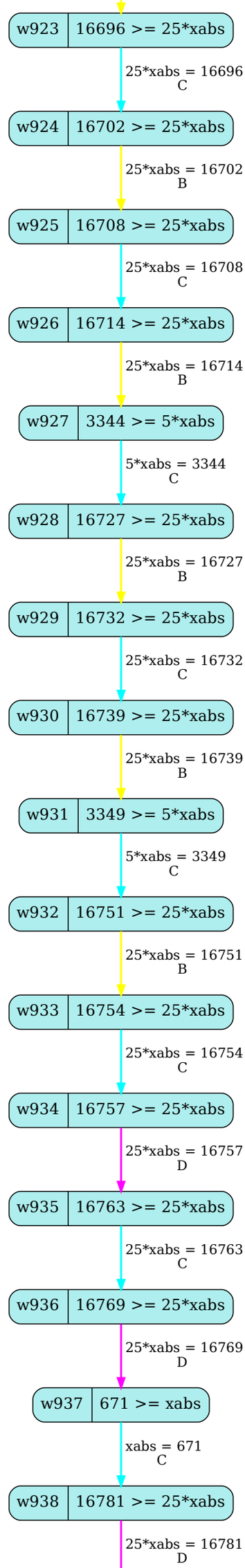
w923
16696 >= 25*xabs
25*xabs = 16696
C
w924
16702 >= 25*xabs
25*xabs = 16702
B
w925
16708 >= 25*xabs
25*xabs = 16708
C
w926
16714 >= 25*xabs
25*xabs = 16714
B
w927
3344 >= 5*xabs
5*xabs = 3344
C
w928
16727 >= 25*xabs
25*xabs = 16727
B
w929
16732 >= 25*xabs
25*xabs = 16732
C
w930
16739 >= 25*xabs
25*xabs = 16739
B
w931
3349 >= 5*xabs
5*xabs = 3349
C
w932
16751 >= 25*xabs
25*xabs = 16751
B
w933
16754 >= 25*xabs
25*xabs = 16754
C
w934
16757 >= 25*xabs
25*xabs = 16757
D
w935
16763 >= 25*xabs
25*xabs = 16763
C
w936
16769 >= 25*xabs
25*xabs = 16769
D
w937
671 >= xabs
xabs = 671
C
w938
16781 >= 25*xabs
25*xabs = 16781
D

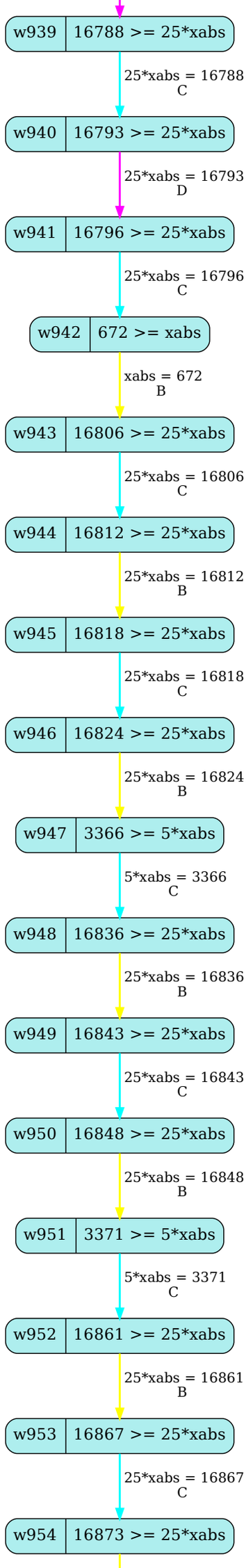
w939
16788 >= 25*xabs
25*xabs = 16788
C
w940
16793 >= 25*xabs
25*xabs = 16793
D
w941
16796 >= 25*xabs
25*xabs = 16796
C
w942
672 >= xabs
xabs = 672
B
w943
16806 >= 25*xabs
25*xabs = 16806
C
w944
16812 >= 25*xabs
25*xabs = 16812
B
w945
16818 >= 25*xabs
25*xabs = 16818
C
w946
16824 >= 25*xabs
25*xabs = 16824
B
w947
3366 >= 5*xabs
5*xabs = 3366
C
w948
16836 >= 25*xabs
25*xabs = 16836
B
w949
16843 >= 25*xabs
25*xabs = 16843
C
w950
16848 >= 25*xabs
25*xabs = 16848
B
w951
3371 >= 5*xabs
5*xabs = 3371
C
w952
16861 >= 25*xabs
25*xabs = 16861
B
w953
16867 >= 25*xabs
25*xabs = 16867
C
w954
16873 >= 25*xabs

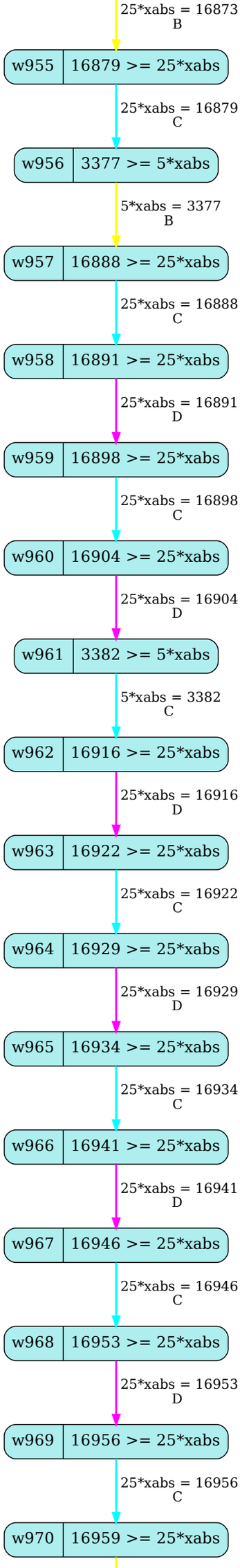
25*xabs = 16873
B
w955
16879 >= 25*xabs
25*xabs = 16879
C
w956
3377 >= 5*xabs
5*xabs = 3377
B
w957
16888 >= 25*xabs
25*xabs = 16888
C
w958
16891 >= 25*xabs
25*xabs = 16891
D
w959
16898 >= 25*xabs
25*xabs = 16898
C
w960
16904 >= 25*xabs
25*xabs = 16904
D
w961
3382 >= 5*xabs
5*xabs = 3382
C
w962
16916 >= 25*xabs
25*xabs = 16916
D
w963
16922 >= 25*xabs
25*xabs = 16922
C
w964
16929 >= 25*xabs
25*xabs = 16929
D
w965
16934 >= 25*xabs
25*xabs = 16934
C
w966
16941 >= 25*xabs
25*xabs = 16941
D
w967
16946 >= 25*xabs
25*xabs = 16946
C
w968
16953 >= 25*xabs
25*xabs = 16953
D
w969
16956 >= 25*xabs
25*xabs = 16956
C
w970
16959 >= 25*xabs

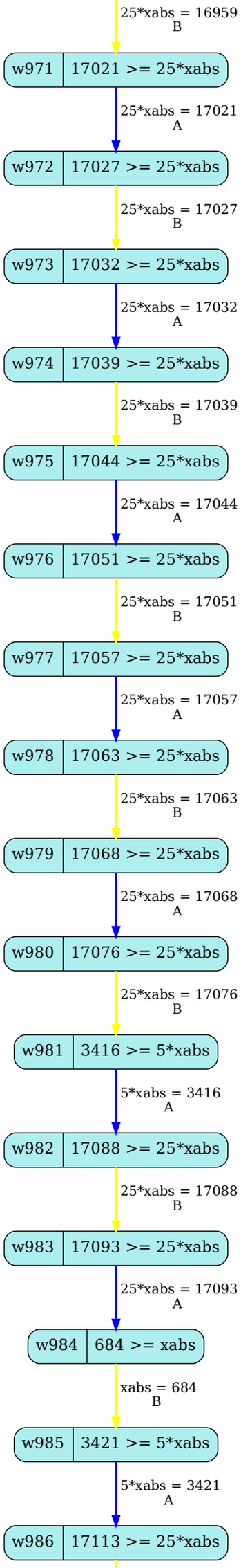
25*xabs = 16959
B
w971
17021 >= 25*xabs
25*xabs = 17021
A
w972
17027 >= 25*xabs
25*xabs = 17027
B
w973
17032 >= 25*xabs
25*xabs = 17032
A
w974
17039 >= 25*xabs
25*xabs = 17039
B
w975
17044 >= 25*xabs
25*xabs = 17044
A
w976
17051 >= 25*xabs
25*xabs = 17051
B
w977
17057 >= 25*xabs
25*xabs = 17057
A
w978
17063 >= 25*xabs
25*xabs = 17063
B
w979
17068 >= 25*xabs
25*xabs = 17068
A
w980
17076 >= 25*xabs
25*xabs = 17076
B
w981
3416 >= 5*xabs
5*xabs = 3416
A
w982
17088 >= 25*xabs
25*xabs = 17088
B
w983
17093 >= 25*xabs
25*xabs = 17093
A
w984
684 >= xabs
xabs = 684
B
w985
3421 >= 5*xabs
5*xabs = 3421
A
w986
17113 >= 25*xabs

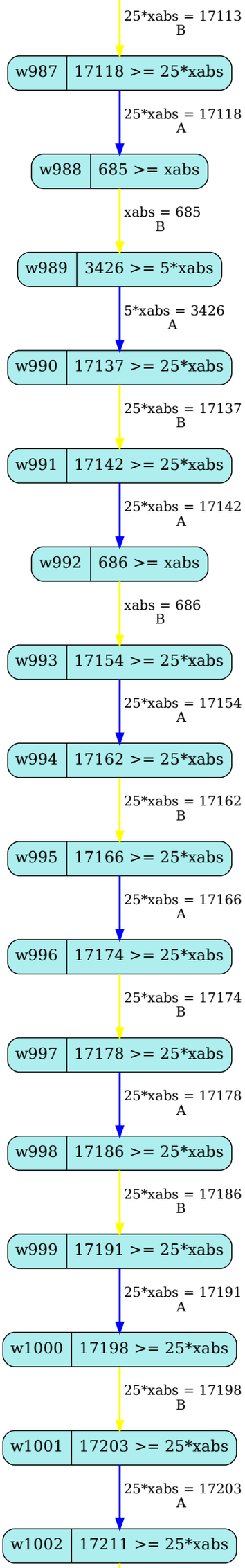
25*xabs = 17113
B
w987
17118 >= 25*xabs
25*xabs = 17118
A
w988
685 >= xabs
xabs = 685
B
w989
3426 >= 5*xabs
5*xabs = 3426
A
w990
17137 >= 25*xabs
25*xabs = 17137
B
w991
17142 >= 25*xabs
25*xabs = 17142
A
w992
686 >= xabs
xabs = 686
B
w993
17154 >= 25*xabs
25*xabs = 17154
A
w994
17162 >= 25*xabs
25*xabs = 17162
B
w995
17166 >= 25*xabs
25*xabs = 17166
A
w996
17174 >= 25*xabs
25*xabs = 17174
B
w997
17178 >= 25*xabs
25*xabs = 17178
A
w998
17186 >= 25*xabs
25*xabs = 17186
B
w999
17191 >= 25*xabs
25*xabs = 17191
A
w1000
17198 >= 25*xabs
25*xabs = 17198
B
w1001
17203 >= 25*xabs
25*xabs = 17203
A
w1002
17211 >= 25*xabs

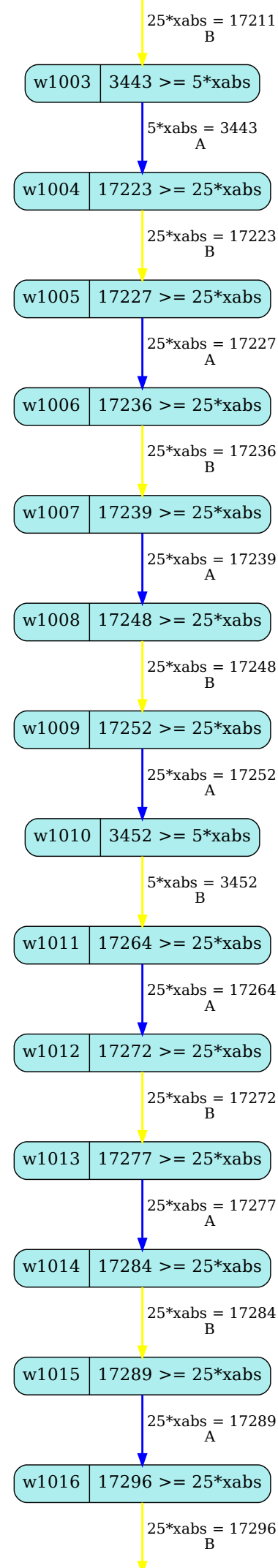
25*xabs = 17211
B
w1003
3443 >= 5*xabs
5*xabs = 3443
A
w1004
17223 >= 25*xabs
25*xabs = 17223
B
w1005
17227 >= 25*xabs
25*xabs = 17227
A
w1006
17236 >= 25*xabs
25*xabs = 17236
B
w1007
17239 >= 25*xabs
25*xabs = 17239
A
w1008
17248 >= 25*xabs
25*xabs = 17248
B
w1009
17252 >= 25*xabs
25*xabs = 17252
A
w1010
3452 >= 5*xabs
5*xabs = 3452
B
w1011
17264 >= 25*xabs
25*xabs = 17264
A
w1012
17272 >= 25*xabs
25*xabs = 17272
B
w1013
17277 >= 25*xabs
25*xabs = 17277
A
w1014
17284 >= 25*xabs
25*xabs = 17284
B
w1015
17289 >= 25*xabs
25*xabs = 17289
A
w1016
17296 >= 25*xabs
25*xabs = 17296
B

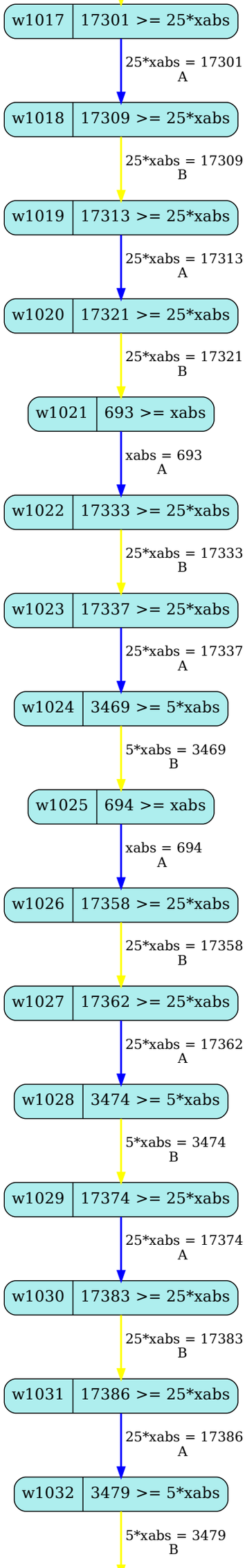
w1017
17301 >= 25*xabs
25*xabs = 17301
A
w1018
17309 >= 25*xabs
25*xabs = 17309
B
w1019
17313 >= 25*xabs
25*xabs = 17313
A
w1020
17321 >= 25*xabs
25*xabs = 17321
B
w1021
693 >= xabs
xabs = 693
A
w1022
17333 >= 25*xabs
25*xabs = 17333
B
w1023
17337 >= 25*xabs
25*xabs = 17337
A
w1024
3469 >= 5*xabs
5*xabs = 3469
B
w1025
694 >= xabs
xabs = 694
A
w1026
17358 >= 25*xabs
25*xabs = 17358
B
w1027
17362 >= 25*xabs
25*xabs = 17362
A
w1028
3474 >= 5*xabs
5*xabs = 3474
B
w1029
17374 >= 25*xabs
25*xabs = 17374
A
w1030
17383 >= 25*xabs
25*xabs = 17383
B
w1031
17386 >= 25*xabs
25*xabs = 17386
A
w1032
3479 >= 5*xabs
5*xabs = 3479
B

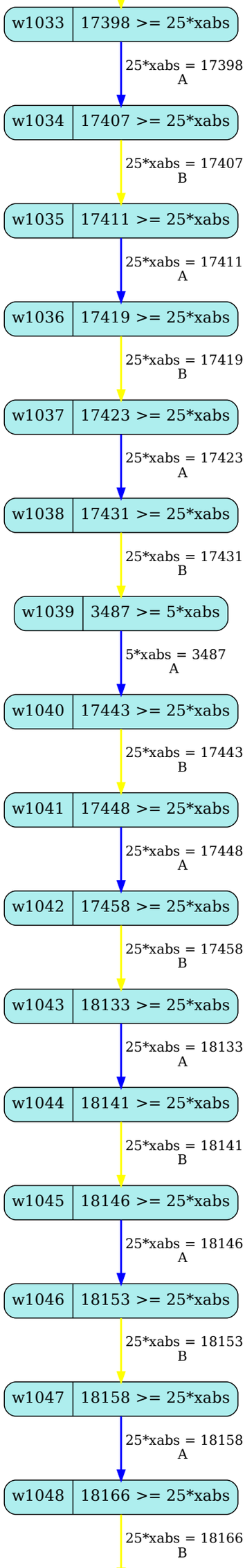
w1033
17398 >= 25*xabs
25*xabs = 17398
A
w1034
17407 >= 25*xabs
25*xabs = 17407
B
w1035
17411 >= 25*xabs
25*xabs = 17411
A
w1036
17419 >= 25*xabs
25*xabs = 17419
B
w1037
17423 >= 25*xabs
25*xabs = 17423
A
w1038
17431 >= 25*xabs
25*xabs = 17431
B
w1039
3487 >= 5*xabs
5*xabs = 3487
A
w1040
17443 >= 25*xabs
25*xabs = 17443
B
w1041
17448 >= 25*xabs
25*xabs = 17448
A
w1042
17458 >= 25*xabs
25*xabs = 17458
B
w1043
18133 >= 25*xabs
25*xabs = 18133
A
w1044
18141 >= 25*xabs
25*xabs = 18141
B
w1045
18146 >= 25*xabs
25*xabs = 18146
A
w1046
18153 >= 25*xabs
25*xabs = 18153
B
w1047
18158 >= 25*xabs
25*xabs = 18158
A
w1048
18166 >= 25*xabs
25*xabs = 18166
B

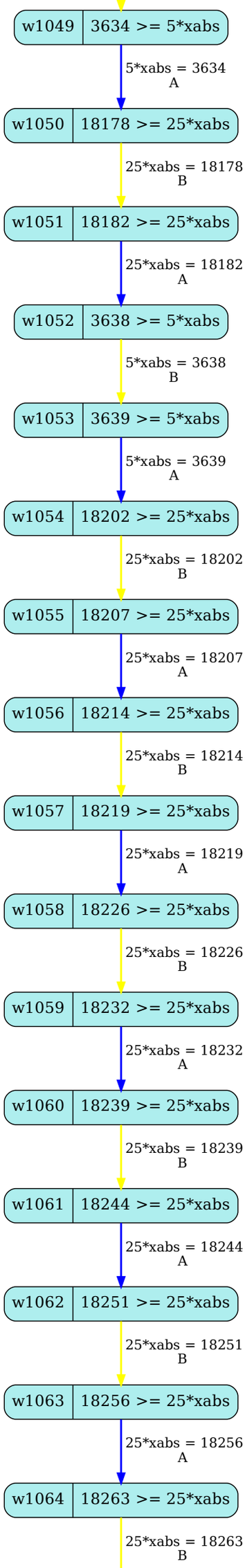
w1049
3634 >= 5*xabs
5*xabs = 3634
A
w1050
18178 >= 25*xabs
25*xabs = 18178
B
w1051
18182 >= 25*xabs
25*xabs = 18182
A
w1052
3638 >= 5*xabs
5*xabs = 3638
B
w1053
3639 >= 5*xabs
5*xabs = 3639
A
w1054
18202 >= 25*xabs
25*xabs = 18202
B
w1055
18207 >= 25*xabs
25*xabs = 18207
A
w1056
18214 >= 25*xabs
25*xabs = 18214
B
w1057
18219 >= 25*xabs
25*xabs = 18219
A
w1058
18226 >= 25*xabs
25*xabs = 18226
B
w1059
18232 >= 25*xabs
25*xabs = 18232
A
w1060
18239 >= 25*xabs
25*xabs = 18239
B
w1061
18244 >= 25*xabs
25*xabs = 18244
A
w1062
18251 >= 25*xabs
25*xabs = 18251
B
w1063
18256 >= 25*xabs
25*xabs = 18256
A
w1064
18263 >= 25*xabs
25*xabs = 18263
B

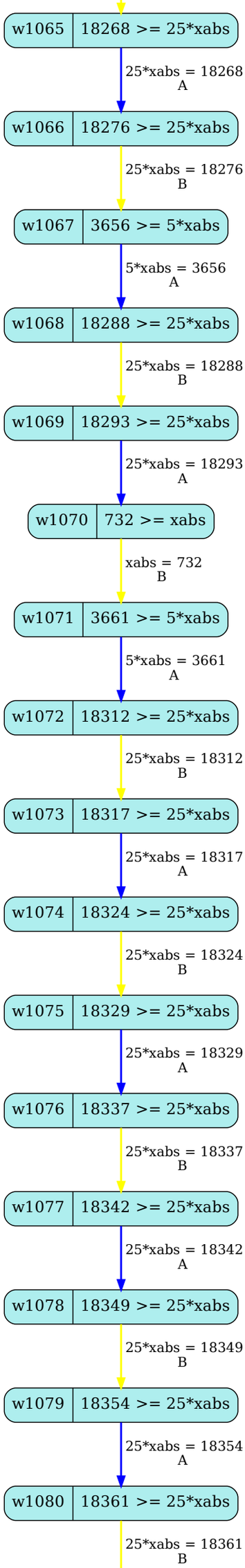
w1065
18268 >= 25*xabs
25*xabs = 18268
A
w1066
18276 >= 25*xabs
25*xabs = 18276
B
w1067
3656 >= 5*xabs
5*xabs = 3656
A
w1068
18288 >= 25*xabs
25*xabs = 18288
B
w1069
18293 >= 25*xabs
25*xabs = 18293
A
w1070
732 >= xabs
xabs = 732
B
w1071
3661 >= 5*xabs
5*xabs = 3661
A
w1072
18312 >= 25*xabs
25*xabs = 18312
B
w1073
18317 >= 25*xabs
25*xabs = 18317
A
w1074
18324 >= 25*xabs
25*xabs = 18324
B
w1075
18329 >= 25*xabs
25*xabs = 18329
A
w1076
18337 >= 25*xabs
25*xabs = 18337
B
w1077
18342 >= 25*xabs
25*xabs = 18342
A
w1078
18349 >= 25*xabs
25*xabs = 18349
B
w1079
18354 >= 25*xabs
25*xabs = 18354
A
w1080
18361 >= 25*xabs
25*xabs = 18361
B

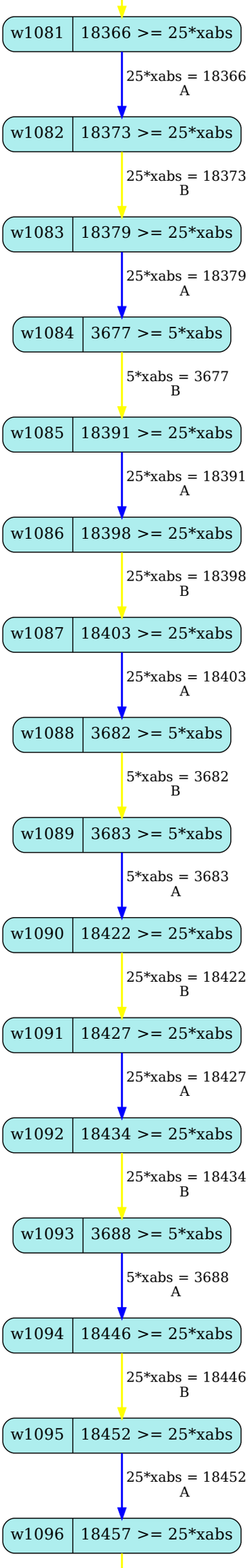
w1081
18366 >= 25*xabs
25*xabs = 18366
A
w1082
18373 >= 25*xabs
25*xabs = 18373
B
w1083
18379 >= 25*xabs
25*xabs = 18379
A
w1084
3677 >= 5*xabs
5*xabs = 3677
B
w1085
18391 >= 25*xabs
25*xabs = 18391
A
w1086
18398 >= 25*xabs
25*xabs = 18398
B
w1087
18403 >= 25*xabs
25*xabs = 18403
A
w1088
3682 >= 5*xabs
5*xabs = 3682
B
w1089
3683 >= 5*xabs
5*xabs = 3683
A
w1090
18422 >= 25*xabs
25*xabs = 18422
B
w1091
18427 >= 25*xabs
25*xabs = 18427
A
w1092
18434 >= 25*xabs
25*xabs = 18434
B
w1093
3688 >= 5*xabs
5*xabs = 3688
A
w1094
18446 >= 25*xabs
25*xabs = 18446
B
w1095
18452 >= 25*xabs
25*xabs = 18452
A
w1096
18457 >= 25*xabs

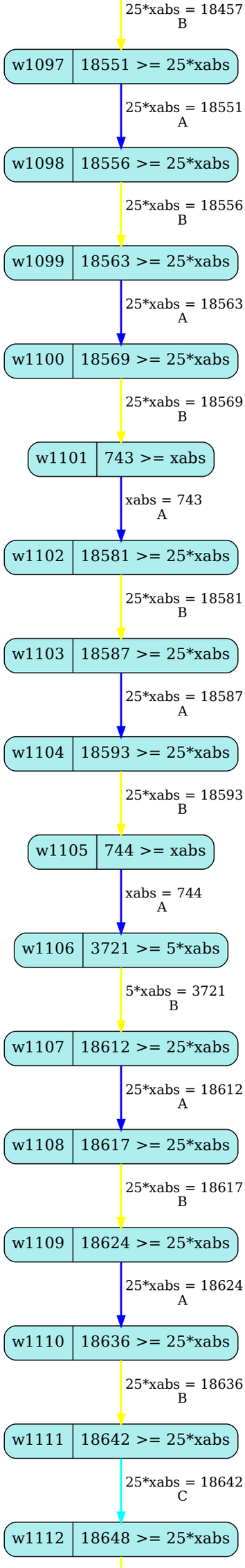
25*xabs = 18457
B
w1097
18551 >= 25*xabs
25*xabs = 18551
A
w1098
18556 >= 25*xabs
25*xabs = 18556
B
w1099
18563 >= 25*xabs
25*xabs = 18563
A
w1100
18569 >= 25*xabs
25*xabs = 18569
B
w1101
743 >= xabs
xabs = 743
A
w1102
18581 >= 25*xabs
25*xabs = 18581
B
w1103
18587 >= 25*xabs
25*xabs = 18587
A
w1104
18593 >= 25*xabs
25*xabs = 18593
B
w1105
744 >= xabs
xabs = 744
A
w1106
3721 >= 5*xabs
5*xabs = 3721
B
w1107
18612 >= 25*xabs
25*xabs = 18612
A
w1108
18617 >= 25*xabs
25*xabs = 18617
B
w1109
18624 >= 25*xabs
25*xabs = 18624
A
w1110
18636 >= 25*xabs
25*xabs = 18636
B
w1111
18642 >= 25*xabs
25*xabs = 18642
C
w1112
18648 >= 25*xabs

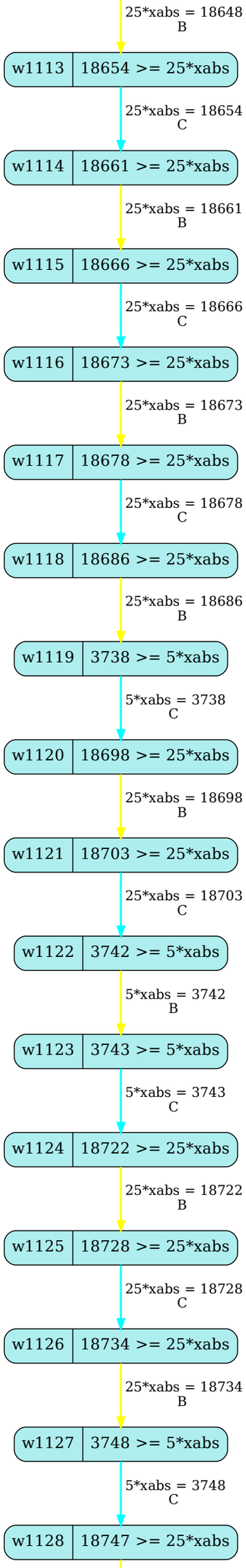
25*xabs = 18648
B
w1113
18654 >= 25*xabs
25*xabs = 18654
C
w1114
18661 >= 25*xabs
25*xabs = 18661
B
w1115
18666 >= 25*xabs
25*xabs = 18666
C
w1116
18673 >= 25*xabs
25*xabs = 18673
B
w1117
18678 >= 25*xabs
25*xabs = 18678
C
w1118
18686 >= 25*xabs
25*xabs = 18686
B
w1119
3738 >= 5*xabs
5*xabs = 3738
C
w1120
18698 >= 25*xabs
25*xabs = 18698
B
w1121
18703 >= 25*xabs
25*xabs = 18703
C
w1122
3742 >= 5*xabs
5*xabs = 3742
B
w1123
3743 >= 5*xabs
5*xabs = 3743
C
w1124
18722 >= 25*xabs
25*xabs = 18722
B
w1125
18728 >= 25*xabs
25*xabs = 18728
C
w1126
18734 >= 25*xabs
25*xabs = 18734
B
w1127
3748 >= 5*xabs
5*xabs = 3748
C
w1128
18747 >= 25*xabs

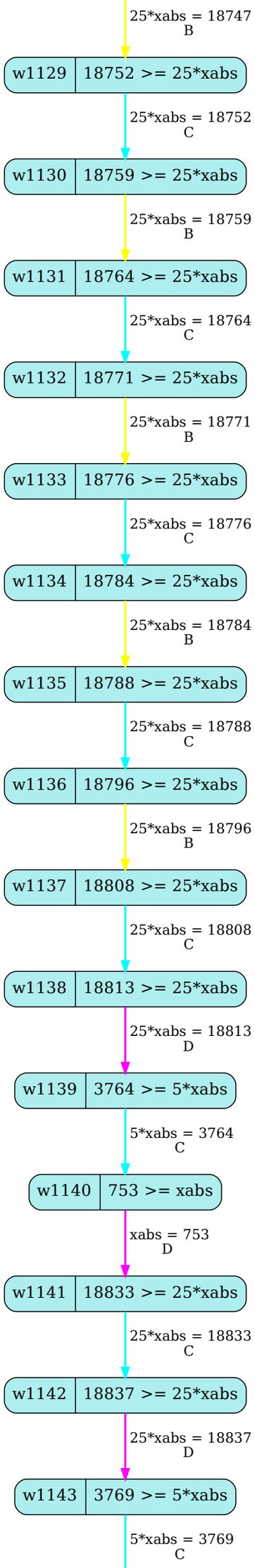
25*xabs = 18747
B
w1129
18752 >= 25*xabs
25*xabs = 18752
C
w1130
18759 >= 25*xabs
25*xabs = 18759
B
w1131
18764 >= 25*xabs
25*xabs = 18764
C
w1132
18771 >= 25*xabs
25*xabs = 18771
B
w1133
18776 >= 25*xabs
25*xabs = 18776
C
w1134
18784 >= 25*xabs
25*xabs = 18784
B
w1135
18788 >= 25*xabs
25*xabs = 18788
C
w1136
18796 >= 25*xabs
25*xabs = 18796
B
w1137
18808 >= 25*xabs
25*xabs = 18808
C
w1138
18813 >= 25*xabs
25*xabs = 18813
D
w1139
3764 >= 5*xabs
5*xabs = 3764
C
w1140
753 >= xabs
xabs = 753
D
w1141
18833 >= 25*xabs
25*xabs = 18833
C
w1142
18837 >= 25*xabs
25*xabs = 18837
D
w1143
3769 >= 5*xabs
5*xabs = 3769
C

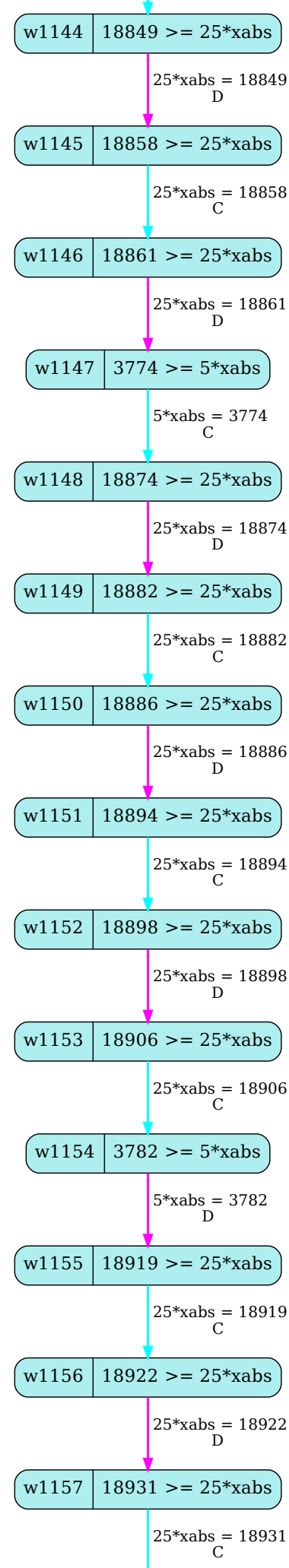
w1144
18849 >= 25*xabs
25*xabs = 18849
D
w1145
18858 >= 25*xabs
25*xabs = 18858
C
w1146
18861 >= 25*xabs
25*xabs = 18861
D
w1147
3774 >= 5*xabs
5*xabs = 3774
C
w1148
18874 >= 25*xabs
25*xabs = 18874
D
w1149
18882 >= 25*xabs
25*xabs = 18882
C
w1150
18886 >= 25*xabs
25*xabs = 18886
D
w1151
18894 >= 25*xabs
25*xabs = 18894
C
w1152
18898 >= 25*xabs
25*xabs = 18898
D
w1153
18906 >= 25*xabs
25*xabs = 18906
C
w1154
3782 >= 5*xabs
5*xabs = 3782
D
w1155
18919 >= 25*xabs
25*xabs = 18919
C
w1156
18922 >= 25*xabs
25*xabs = 18922
D
w1157
18931 >= 25*xabs
25*xabs = 18931
C

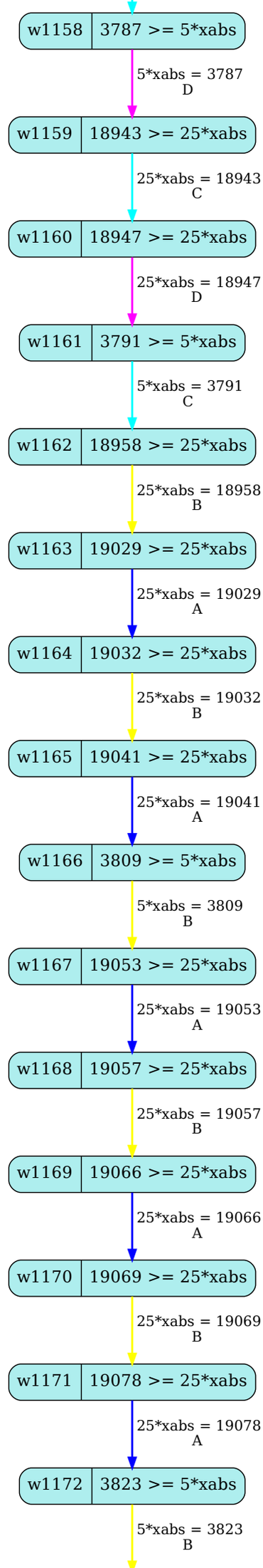
w1158
3787 >= 5*xabs
5*xabs = 3787
D
w1159
18943 >= 25*xabs
25*xabs = 18943
C
w1160
18947 >= 25*xabs
25*xabs = 18947
D
w1161
3791 >= 5*xabs
5*xabs = 3791
C
w1162
18958 >= 25*xabs
25*xabs = 18958
B
w1163
19029 >= 25*xabs
25*xabs = 19029
A
w1164
19032 >= 25*xabs
25*xabs = 19032
B
w1165
19041 >= 25*xabs
25*xabs = 19041
A
w1166
3809 >= 5*xabs
5*xabs = 3809
B
w1167
19053 >= 25*xabs
25*xabs = 19053
A
w1168
19057 >= 25*xabs
25*xabs = 19057
B
w1169
19066 >= 25*xabs
25*xabs = 19066
A
w1170
19069 >= 25*xabs
25*xabs = 19069
B
w1171
19078 >= 25*xabs
25*xabs = 19078
A
w1172
3823 >= 5*xabs
5*xabs = 3823
B

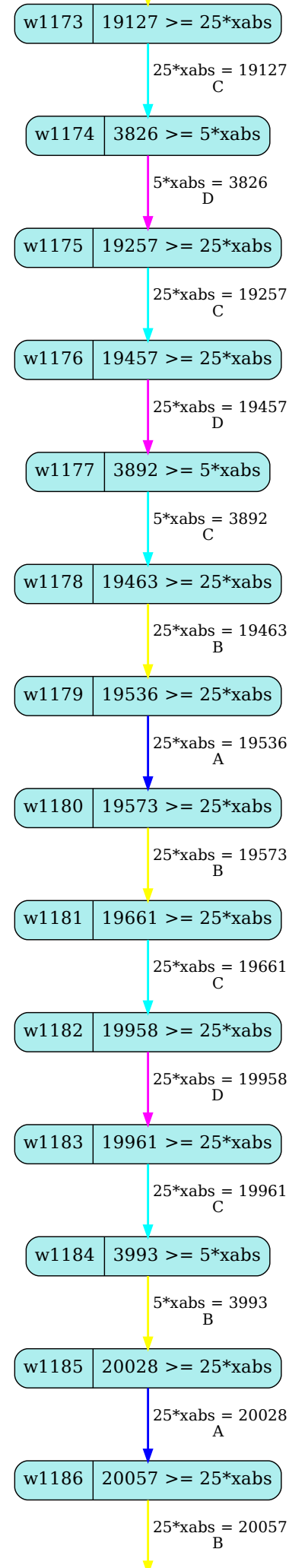
w1173
19127 >= 25*xabs
25*xabs = 19127
C
w1174
3826 >= 5*xabs
5*xabs = 3826
D
w1175
19257 >= 25*xabs
25*xabs = 19257
C
w1176
19457 >= 25*xabs
25*xabs = 19457
D
w1177
3892 >= 5*xabs
5*xabs = 3892
C
w1178
19463 >= 25*xabs
25*xabs = 19463
B
w1179
19536 >= 25*xabs
25*xabs = 19536
A
w1180
19573 >= 25*xabs
25*xabs = 19573
B
w1181
19661 >= 25*xabs
25*xabs = 19661
C
w1182
19958 >= 25*xabs
25*xabs = 19958
D
w1183
19961 >= 25*xabs
25*xabs = 19961
C
w1184
3993 >= 5*xabs
5*xabs = 3993
B
w1185
20028 >= 25*xabs
25*xabs = 20028
A
w1186
20057 >= 25*xabs
25*xabs = 20057
B

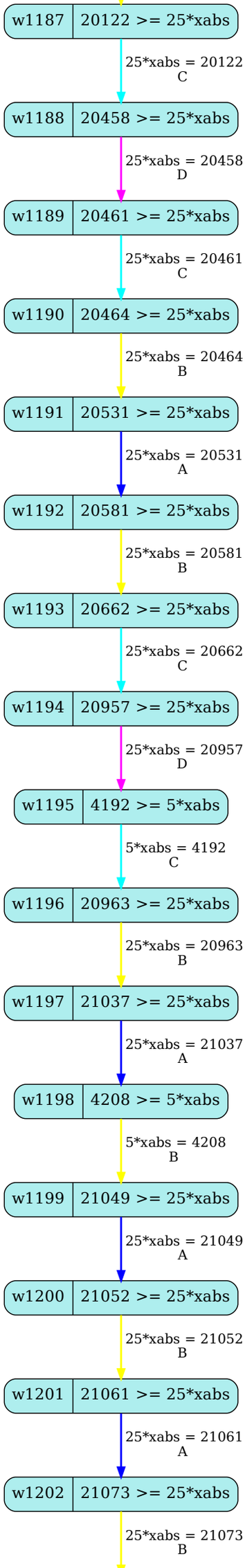
w1187
20122 >= 25*xabs
25*xabs = 20122
C
w1188
20458 >= 25*xabs
25*xabs = 20458
D
w1189
20461 >= 25*xabs
25*xabs = 20461
C
w1190
20464 >= 25*xabs
25*xabs = 20464
B
w1191
20531 >= 25*xabs
25*xabs = 20531
A
w1192
20581 >= 25*xabs
25*xabs = 20581
B
w1193
20662 >= 25*xabs
25*xabs = 20662
C
w1194
20957 >= 25*xabs
25*xabs = 20957
D
w1195
4192 >= 5*xabs
5*xabs = 4192
C
w1196
20963 >= 25*xabs
25*xabs = 20963
B
w1197
21037 >= 25*xabs
25*xabs = 21037
A
w1198
4208 >= 5*xabs
5*xabs = 4208
B
w1199
21049 >= 25*xabs
25*xabs = 21049
A
w1200
21052 >= 25*xabs
25*xabs = 21052
B
w1201
21061 >= 25*xabs
25*xabs = 21061
A
w1202
21073 >= 25*xabs
25*xabs = 21073
B

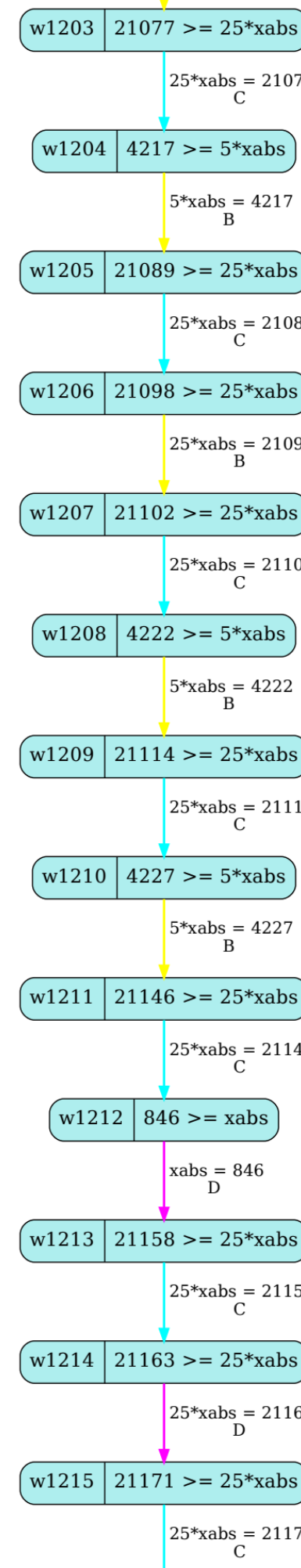
w1203
21077 >= 25*xabs
25*xabs = 21077
C
w1204
4217 >= 5*xabs
5*xabs = 4217
B
w1205
21089 >= 25*xabs
25*xabs = 21089
C
w1206
21098 >= 25*xabs
25*xabs = 21098
B
w1207
21102 >= 25*xabs
25*xabs = 21102
C
w1208
4222 >= 5*xabs
5*xabs = 4222
B
w1209
21114 >= 25*xabs
25*xabs = 21114
C
w1210
4227 >= 5*xabs
5*xabs = 4227
B
w1211
21146 >= 25*xabs
25*xabs = 21146
C
w1212
846 >= xabs
xabs = 846
D
w1213
21158 >= 25*xabs
25*xabs = 21158
C
w1214
21163 >= 25*xabs
25*xabs = 21163
D
w1215
21171 >= 25*xabs
25*xabs = 21171
C

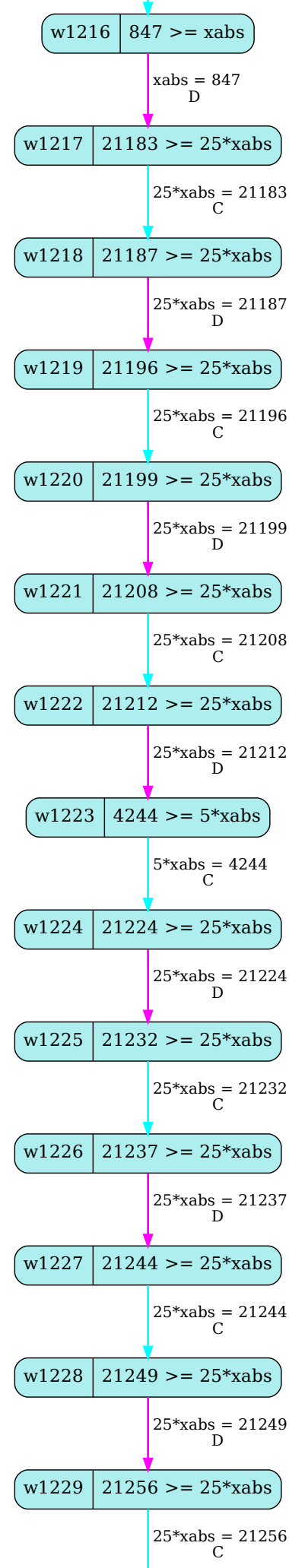
w1216
847 >= xabs
xabs = 847
D
w1217
21183 >= 25*xabs
25*xabs = 21183
C
w1218
21187 >= 25*xabs
25*xabs = 21187
D
w1219
21196 >= 25*xabs
25*xabs = 21196
C
w1220
21199 >= 25*xabs
25*xabs = 21199
D
w1221
21208 >= 25*xabs
25*xabs = 21208
C
w1222
21212 >= 25*xabs
25*xabs = 21212
D
w1223
4244 >= 5*xabs
5*xabs = 4244
C
w1224
21224 >= 25*xabs
25*xabs = 21224
D
w1225
21232 >= 25*xabs
25*xabs = 21232
C
w1226
21237 >= 25*xabs
25*xabs = 21237
D
w1227
21244 >= 25*xabs
25*xabs = 21244
C
w1228
21249 >= 25*xabs
25*xabs = 21249
D
w1229
21256 >= 25*xabs
25*xabs = 21256
C

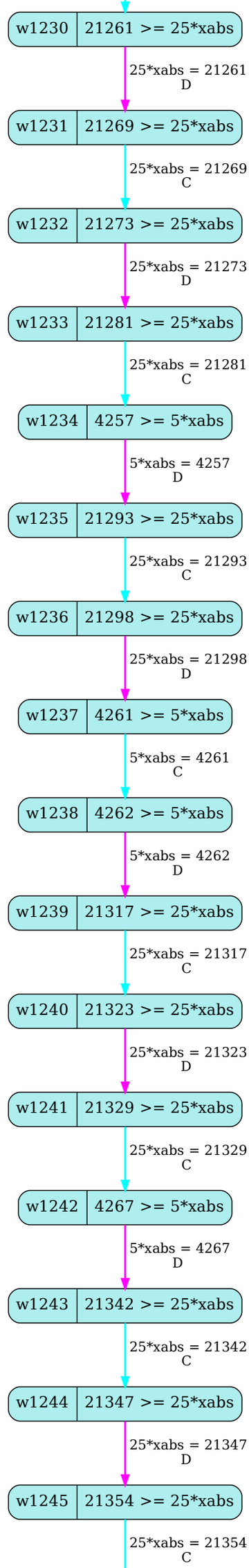
w1230
21261 >= 25*xabs
25*xabs = 21261
D
w1231
21269 >= 25*xabs
25*xabs = 21269
C
w1232
21273 >= 25*xabs
25*xabs = 21273
D
w1233
21281 >= 25*xabs
25*xabs = 21281
C
w1234
4257 >= 5*xabs
5*xabs = 4257
D
w1235
21293 >= 25*xabs
25*xabs = 21293
C
w1236
21298 >= 25*xabs
25*xabs = 21298
D
w1237
4261 >= 5*xabs
5*xabs = 4261
C
w1238
4262 >= 5*xabs
5*xabs = 4262
D
w1239
21317 >= 25*xabs
25*xabs = 21317
C
w1240
21323 >= 25*xabs
25*xabs = 21323
D
w1241
21329 >= 25*xabs
25*xabs = 21329
C
w1242
4267 >= 5*xabs
5*xabs = 4267
D
w1243
21342 >= 25*xabs
25*xabs = 21342
C
w1244
21347 >= 25*xabs
25*xabs = 21347
D
w1245
21354 >= 25*xabs
25*xabs = 21354
C

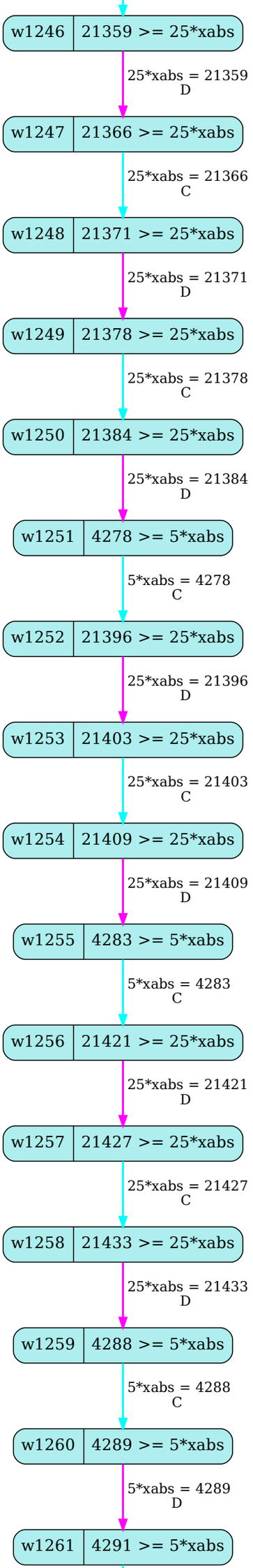
w1246
21359 >= 25*xabs
25*xabs = 21359
D
w1247
21366 >= 25*xabs
25*xabs = 21366
C
w1248
21371 >= 25*xabs
25*xabs = 21371
D
w1249
21378 >= 25*xabs
25*xabs = 21378
C
w1250
21384 >= 25*xabs
25*xabs = 21384
D
w1251
4278 >= 5*xabs
5*xabs = 4278
C
w1252
21396 >= 25*xabs
25*xabs = 21396
D
w1253
21403 >= 25*xabs
25*xabs = 21403
C
w1254
21409 >= 25*xabs
25*xabs = 21409
D
w1255
4283 >= 5*xabs
5*xabs = 4283
C
w1256
21421 >= 25*xabs
25*xabs = 21421
D
w1257
21427 >= 25*xabs
25*xabs = 21427
C
w1258
21433 >= 25*xabs
25*xabs = 21433
D
w1259
4288 >= 5*xabs
5*xabs = 4288
C
w1260
4289 >= 5*xabs
5*xabs = 4289
D
w1261
4291 >= 5*xabs

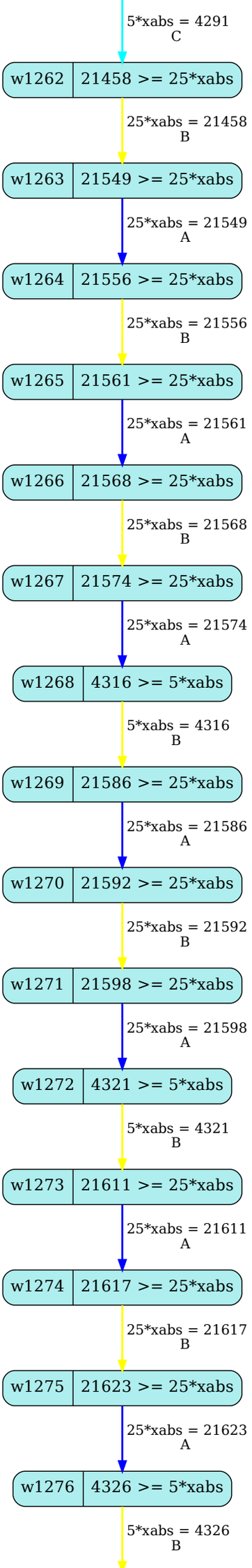
5*xabs = 4291
C
w1262
21458 >= 25*xabs
25*xabs = 21458
B
w1263
21549 >= 25*xabs
25*xabs = 21549
A
w1264
21556 >= 25*xabs
25*xabs = 21556
B
w1265
21561 >= 25*xabs
25*xabs = 21561
A
w1266
21568 >= 25*xabs
25*xabs = 21568
B
w1267
21574 >= 25*xabs
25*xabs = 21574
A
w1268
4316 >= 5*xabs
5*xabs = 4316
B
w1269
21586 >= 25*xabs
25*xabs = 21586
A
w1270
21592 >= 25*xabs
25*xabs = 21592
B
w1271
21598 >= 25*xabs
25*xabs = 21598
A
w1272
4321 >= 5*xabs
5*xabs = 4321
B
w1273
21611 >= 25*xabs
25*xabs = 21611
A
w1274
21617 >= 25*xabs
25*xabs = 21617
B
w1275
21623 >= 25*xabs
25*xabs = 21623
A
w1276
4326 >= 5*xabs
5*xabs = 4326
B

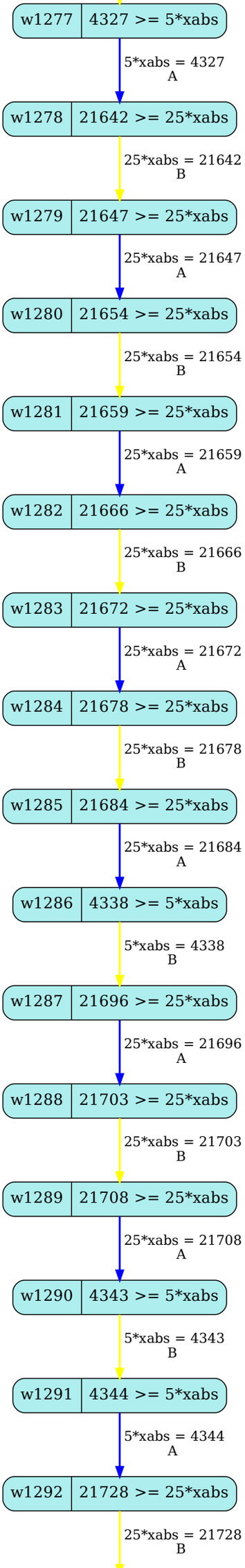
w1277
4327 >= 5*xabs
5*xabs = 4327
A
w1278
21642 >= 25*xabs
25*xabs = 21642
B
w1279
21647 >= 25*xabs
25*xabs = 21647
A
w1280
21654 >= 25*xabs
25*xabs = 21654
B
w1281
21659 >= 25*xabs
25*xabs = 21659
A
w1282
21666 >= 25*xabs
25*xabs = 21666
B
w1283
21672 >= 25*xabs
25*xabs = 21672
A
w1284
21678 >= 25*xabs
25*xabs = 21678
B
w1285
21684 >= 25*xabs
25*xabs = 21684
A
w1286
4338 >= 5*xabs
5*xabs = 4338
B
w1287
21696 >= 25*xabs
25*xabs = 21696
A
w1288
21703 >= 25*xabs
25*xabs = 21703
B
w1289
21708 >= 25*xabs
25*xabs = 21708
A
w1290
4343 >= 5*xabs
5*xabs = 4343
B
w1291
4344 >= 5*xabs
5*xabs = 4344
A
w1292
21728 >= 25*xabs
25*xabs = 21728
B

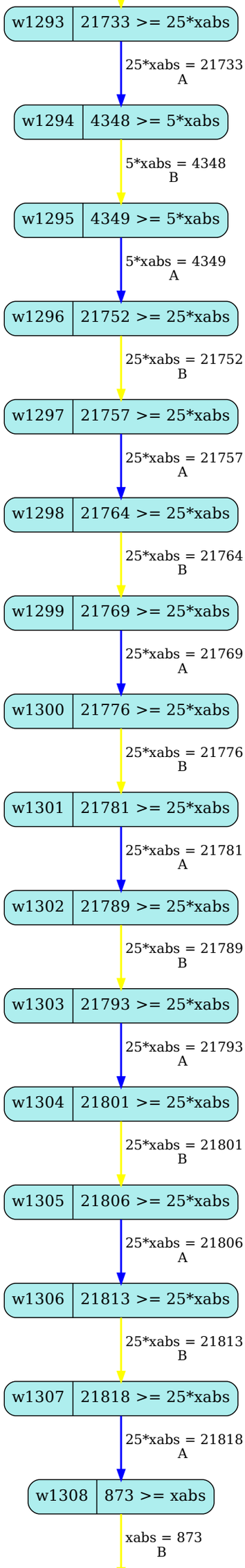
w1293
21733 >= 25*xabs
25*xabs = 21733
A
w1294
4348 >= 5*xabs
5*xabs = 4348
B
w1295
4349 >= 5*xabs
5*xabs = 4349
A
w1296
21752 >= 25*xabs
25*xabs = 21752
B
w1297
21757 >= 25*xabs
25*xabs = 21757
A
w1298
21764 >= 25*xabs
25*xabs = 21764
B
w1299
21769 >= 25*xabs
25*xabs = 21769
A
w1300
21776 >= 25*xabs
25*xabs = 21776
B
w1301
21781 >= 25*xabs
25*xabs = 21781
A
w1302
21789 >= 25*xabs
25*xabs = 21789
B
w1303
21793 >= 25*xabs
25*xabs = 21793
A
w1304
21801 >= 25*xabs
25*xabs = 21801
B
w1305
21806 >= 25*xabs
25*xabs = 21806
A
w1306
21813 >= 25*xabs
25*xabs = 21813
B
w1307
21818 >= 25*xabs
25*xabs = 21818
A
w1308
873 >= xabs
xabs = 873
B

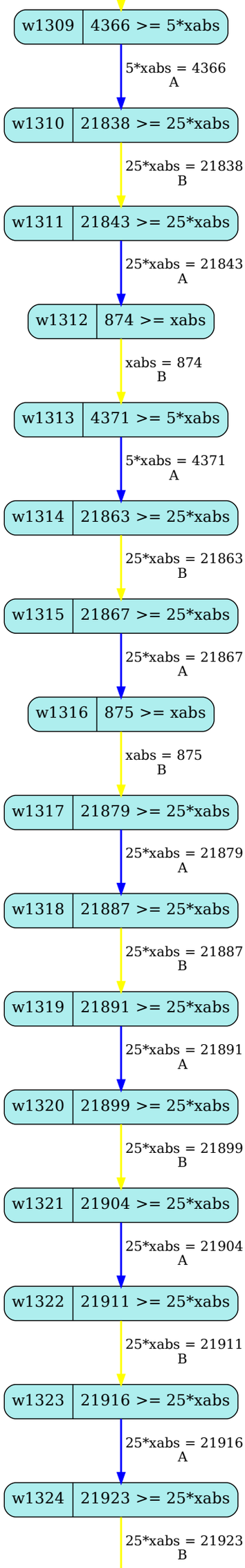
w1309
4366 >= 5*xabs
5*xabs = 4366
A
w1310
21838 >= 25*xabs
25*xabs = 21838
B
w1311
21843 >= 25*xabs
25*xabs = 21843
A
w1312
874 >= xabs
xabs = 874
B
w1313
4371 >= 5*xabs
5*xabs = 4371
A
w1314
21863 >= 25*xabs
25*xabs = 21863
B
w1315
21867 >= 25*xabs
25*xabs = 21867
A
w1316
875 >= xabs
xabs = 875
B
w1317
21879 >= 25*xabs
25*xabs = 21879
A
w1318
21887 >= 25*xabs
25*xabs = 21887
B
w1319
21891 >= 25*xabs
25*xabs = 21891
A
w1320
21899 >= 25*xabs
25*xabs = 21899
B
w1321
21904 >= 25*xabs
25*xabs = 21904
A
w1322
21911 >= 25*xabs
25*xabs = 21911
B
w1323
21916 >= 25*xabs
25*xabs = 21916
A
w1324
21923 >= 25*xabs
25*xabs = 21923
B

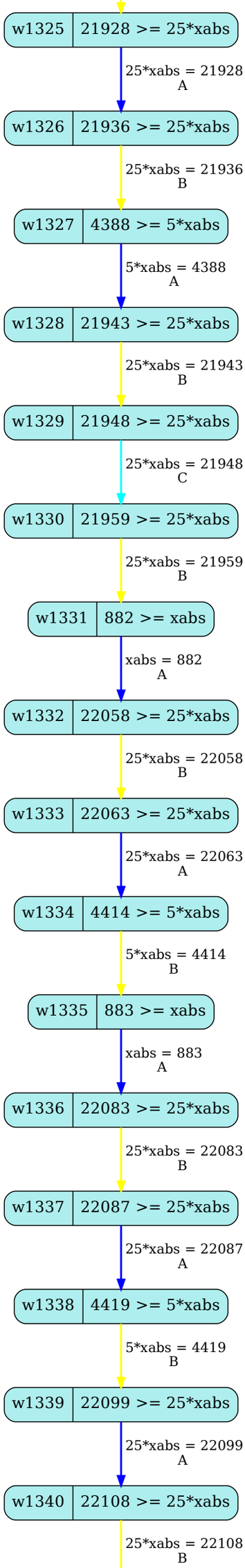
w1325
21928 >= 25*xabs
25*xabs = 21928
A
w1326
21936 >= 25*xabs
25*xabs = 21936
B
w1327
4388 >= 5*xabs
5*xabs = 4388
A
w1328
21943 >= 25*xabs
25*xabs = 21943
B
w1329
21948 >= 25*xabs
25*xabs = 21948
C
w1330
21959 >= 25*xabs
25*xabs = 21959
B
w1331
882 >= xabs
xabs = 882
A
w1332
22058 >= 25*xabs
25*xabs = 22058
B
w1333
22063 >= 25*xabs
25*xabs = 22063
A
w1334
4414 >= 5*xabs
5*xabs = 4414
B
w1335
883 >= xabs
xabs = 883
A
w1336
22083 >= 25*xabs
25*xabs = 22083
B
w1337
22087 >= 25*xabs
25*xabs = 22087
A
w1338
4419 >= 5*xabs
5*xabs = 4419
B
w1339
22099 >= 25*xabs
25*xabs = 22099
A
w1340
22108 >= 25*xabs
25*xabs = 22108
B

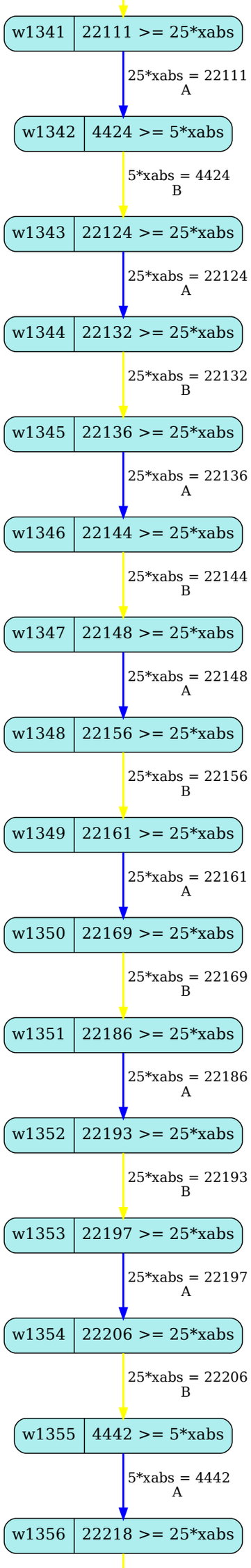
w1341
22111 >= 25*xabs
25*xabs = 22111
A
w1342
4424 >= 5*xabs
5*xabs = 4424
B
w1343
22124 >= 25*xabs
25*xabs = 22124
A
w1344
22132 >= 25*xabs
25*xabs = 22132
B
w1345
22136 >= 25*xabs
25*xabs = 22136
A
w1346
22144 >= 25*xabs
25*xabs = 22144
B
w1347
22148 >= 25*xabs
25*xabs = 22148
A
w1348
22156 >= 25*xabs
25*xabs = 22156
B
w1349
22161 >= 25*xabs
25*xabs = 22161
A
w1350
22169 >= 25*xabs
25*xabs = 22169
B
w1351
22186 >= 25*xabs
25*xabs = 22186
A
w1352
22193 >= 25*xabs
25*xabs = 22193
B
w1353
22197 >= 25*xabs
25*xabs = 22197
A
w1354
22206 >= 25*xabs
25*xabs = 22206
B
w1355
4442 >= 5*xabs
5*xabs = 4442
A
w1356
22218 >= 25*xabs

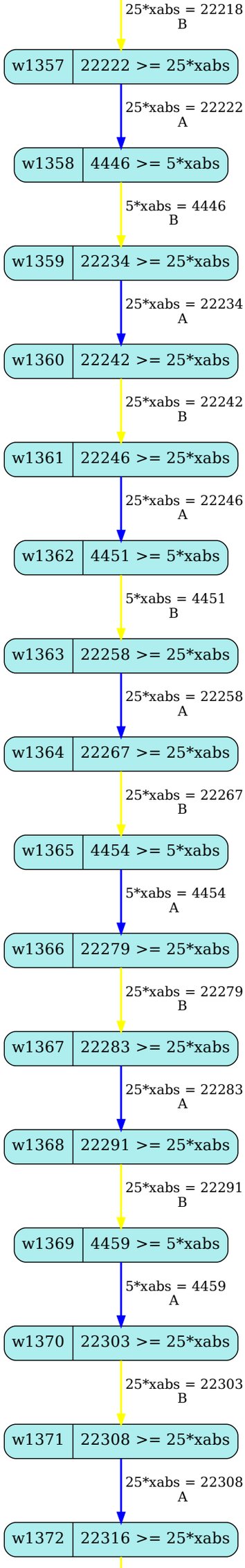
25*xabs = 22218
B
w1357
22222 >= 25*xabs
25*xabs = 22222
A
w1358
4446 >= 5*xabs
5*xabs = 4446
B
w1359
22234 >= 25*xabs
25*xabs = 22234
A
w1360
22242 >= 25*xabs
25*xabs = 22242
B
w1361
22246 >= 25*xabs
25*xabs = 22246
A
w1362
4451 >= 5*xabs
5*xabs = 4451
B
w1363
22258 >= 25*xabs
25*xabs = 22258
A
w1364
22267 >= 25*xabs
25*xabs = 22267
B
w1365
4454 >= 5*xabs
5*xabs = 4454
A
w1366
22279 >= 25*xabs
25*xabs = 22279
B
w1367
22283 >= 25*xabs
25*xabs = 22283
A
w1368
22291 >= 25*xabs
25*xabs = 22291
B
w1369
4459 >= 5*xabs
5*xabs = 4459
A
w1370
22303 >= 25*xabs
25*xabs = 22303
B
w1371
22308 >= 25*xabs
25*xabs = 22308
A
w1372
22316 >= 25*xabs

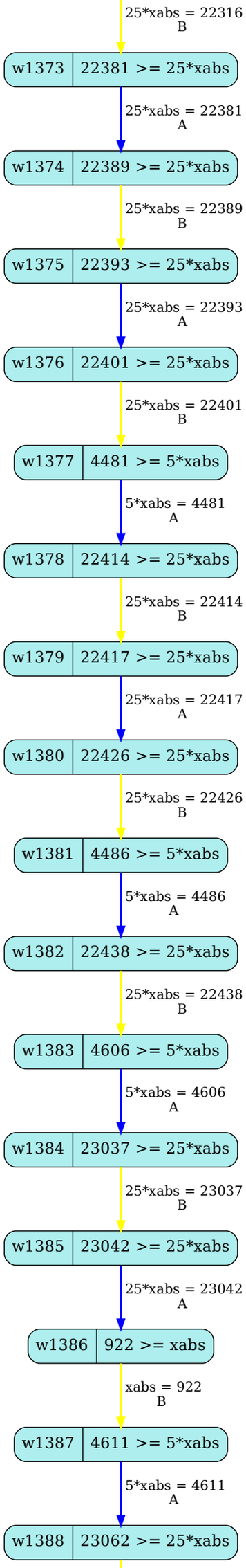
25*xabs = 22316
B
w1373
22381 >= 25*xabs
25*xabs = 22381
A
w1374
22389 >= 25*xabs
25*xabs = 22389
B
w1375
22393 >= 25*xabs
25*xabs = 22393
A
w1376
22401 >= 25*xabs
25*xabs = 22401
B
w1377
4481 >= 5*xabs
5*xabs = 4481
A
w1378
22414 >= 25*xabs
25*xabs = 22414
B
w1379
22417 >= 25*xabs
25*xabs = 22417
A
w1380
22426 >= 25*xabs
25*xabs = 22426
B
w1381
4486 >= 5*xabs
5*xabs = 4486
A
w1382
22438 >= 25*xabs
25*xabs = 22438
B
w1383
4606 >= 5*xabs
5*xabs = 4606
A
w1384
23037 >= 25*xabs
25*xabs = 23037
B
w1385
23042 >= 25*xabs
25*xabs = 23042
A
w1386
922 >= xabs
xabs = 922
B
w1387
4611 >= 5*xabs
5*xabs = 4611
A
w1388
23062 >= 25*xabs

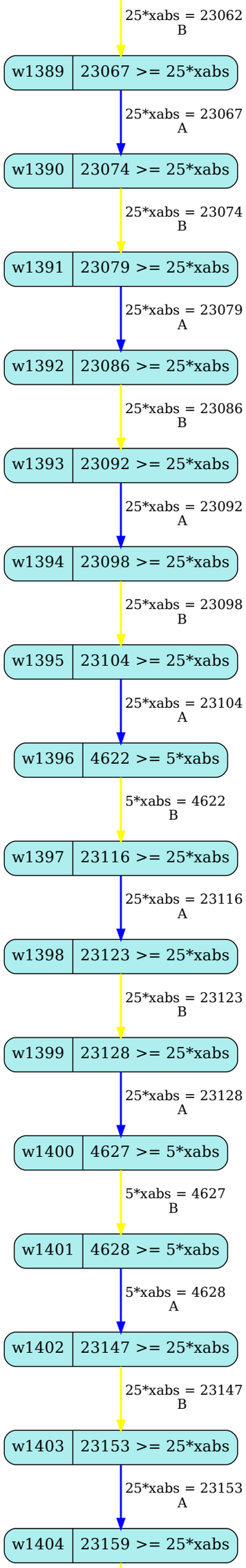
25*xabs = 23062
B
w1389
23067 >= 25*xabs
25*xabs = 23067
A
w1390
23074 >= 25*xabs
25*xabs = 23074
B
w1391
23079 >= 25*xabs
25*xabs = 23079
A
w1392
23086 >= 25*xabs
25*xabs = 23086
B
w1393
23092 >= 25*xabs
25*xabs = 23092
A
w1394
23098 >= 25*xabs
25*xabs = 23098
B
w1395
23104 >= 25*xabs
25*xabs = 23104
A
w1396
4622 >= 5*xabs
5*xabs = 4622
B
w1397
23116 >= 25*xabs
25*xabs = 23116
A
w1398
23123 >= 25*xabs
25*xabs = 23123
B
w1399
23128 >= 25*xabs
25*xabs = 23128
A
w1400
4627 >= 5*xabs
5*xabs = 4627
B
w1401
4628 >= 5*xabs
5*xabs = 4628
A
w1402
23147 >= 25*xabs
25*xabs = 23147
B
w1403
23153 >= 25*xabs
25*xabs = 23153
A
w1404
23159 >= 25*xabs

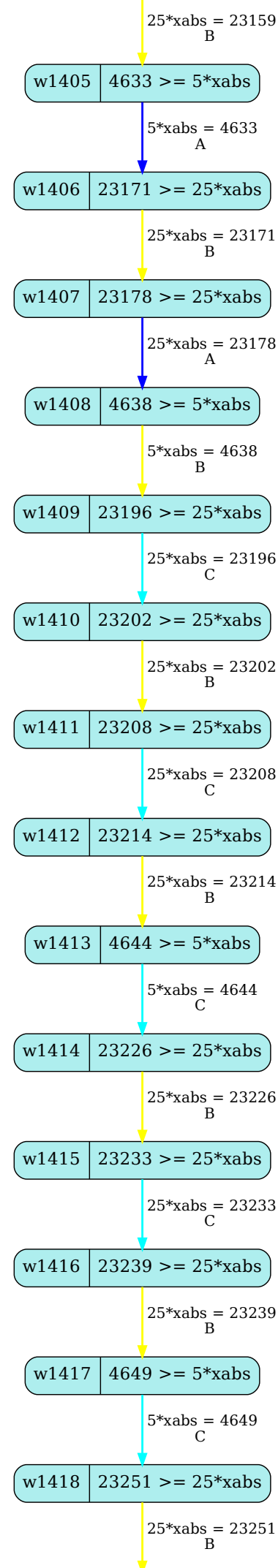
25*xabs = 23159
B
w1405
4633 >= 5*xabs
5*xabs = 4633
A
w1406
23171 >= 25*xabs
25*xabs = 23171
B
w1407
23178 >= 25*xabs
25*xabs = 23178
A
w1408
4638 >= 5*xabs
5*xabs = 4638
B
w1409
23196 >= 25*xabs
25*xabs = 23196
C
w1410
23202 >= 25*xabs
25*xabs = 23202
B
w1411
23208 >= 25*xabs
25*xabs = 23208
C
w1412
23214 >= 25*xabs
25*xabs = 23214
B
w1413
4644 >= 5*xabs
5*xabs = 4644
C
w1414
23226 >= 25*xabs
25*xabs = 23226
B
w1415
23233 >= 25*xabs
25*xabs = 23233
C
w1416
23239 >= 25*xabs
25*xabs = 23239
B
w1417
4649 >= 5*xabs
5*xabs = 4649
C
w1418
23251 >= 25*xabs
25*xabs = 23251
B

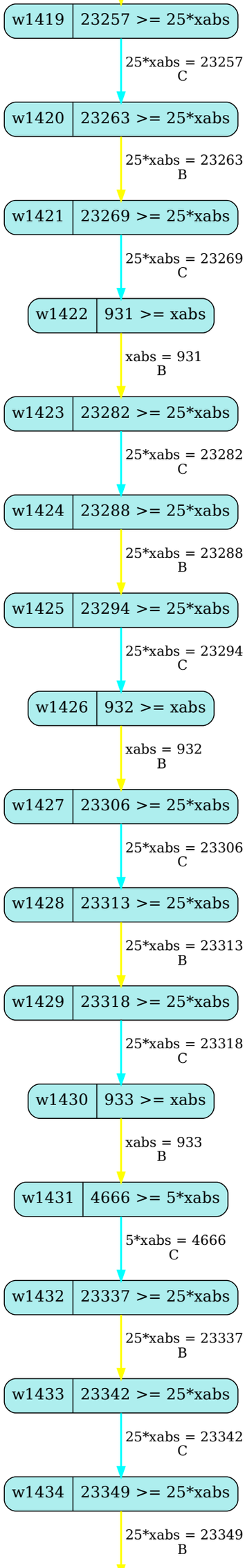
w1419
23257 >= 25*xabs
25*xabs = 23257
C
w1420
23263 >= 25*xabs
25*xabs = 23263
B
w1421
23269 >= 25*xabs
25*xabs = 23269
C
w1422
931 >= xabs
xabs = 931
B
w1423
23282 >= 25*xabs
25*xabs = 23282
C
w1424
23288 >= 25*xabs
25*xabs = 23288
B
w1425
23294 >= 25*xabs
25*xabs = 23294
C
w1426
932 >= xabs
xabs = 932
B
w1427
23306 >= 25*xabs
25*xabs = 23306
C
w1428
23313 >= 25*xabs
25*xabs = 23313
B
w1429
23318 >= 25*xabs
25*xabs = 23318
C
w1430
933 >= xabs
xabs = 933
B
w1431
4666 >= 5*xabs
5*xabs = 4666
C
w1432
23337 >= 25*xabs
25*xabs = 23337
B
w1433
23342 >= 25*xabs
25*xabs = 23342
C
w1434
23349 >= 25*xabs
25*xabs = 23349
B

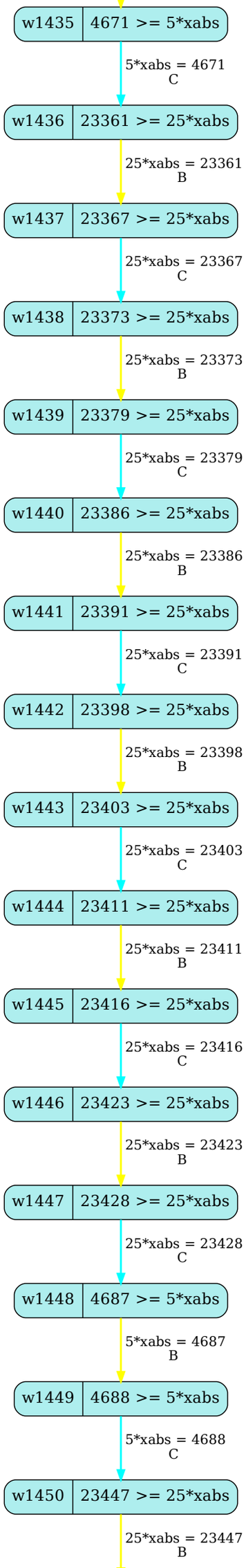
w1435
4671 >= 5*xabs
5*xabs = 4671
C
w1436
23361 >= 25*xabs
25*xabs = 23361
B
w1437
23367 >= 25*xabs
25*xabs = 23367
C
w1438
23373 >= 25*xabs
25*xabs = 23373
B
w1439
23379 >= 25*xabs
25*xabs = 23379
C
w1440
23386 >= 25*xabs
25*xabs = 23386
B
w1441
23391 >= 25*xabs
25*xabs = 23391
C
w1442
23398 >= 25*xabs
25*xabs = 23398
B
w1443
23403 >= 25*xabs
25*xabs = 23403
C
w1444
23411 >= 25*xabs
25*xabs = 23411
B
w1445
23416 >= 25*xabs
25*xabs = 23416
C
w1446
23423 >= 25*xabs
25*xabs = 23423
B
w1447
23428 >= 25*xabs
25*xabs = 23428
C
w1448
4687 >= 5*xabs
5*xabs = 4687
B
w1449
4688 >= 5*xabs
5*xabs = 4688
C
w1450
23447 >= 25*xabs
25*xabs = 23447
B

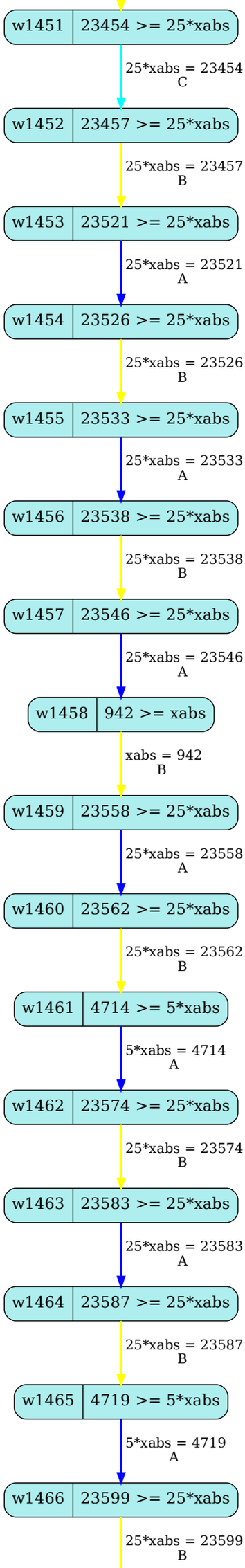
w1451
23454 >= 25*xabs
25*xabs = 23454
C
w1452
23457 >= 25*xabs
25*xabs = 23457
B
w1453
23521 >= 25*xabs
25*xabs = 23521
A
w1454
23526 >= 25*xabs
25*xabs = 23526
B
w1455
23533 >= 25*xabs
25*xabs = 23533
A
w1456
23538 >= 25*xabs
25*xabs = 23538
B
w1457
23546 >= 25*xabs
25*xabs = 23546
A
w1458
942 >= xabs
xabs = 942
B
w1459
23558 >= 25*xabs
25*xabs = 23558
A
w1460
23562 >= 25*xabs
25*xabs = 23562
B
w1461
4714 >= 5*xabs
5*xabs = 4714
A
w1462
23574 >= 25*xabs
25*xabs = 23574
B
w1463
23583 >= 25*xabs
25*xabs = 23583
A
w1464
23587 >= 25*xabs
25*xabs = 23587
B
w1465
4719 >= 5*xabs
5*xabs = 4719
A
w1466
23599 >= 25*xabs
25*xabs = 23599
B

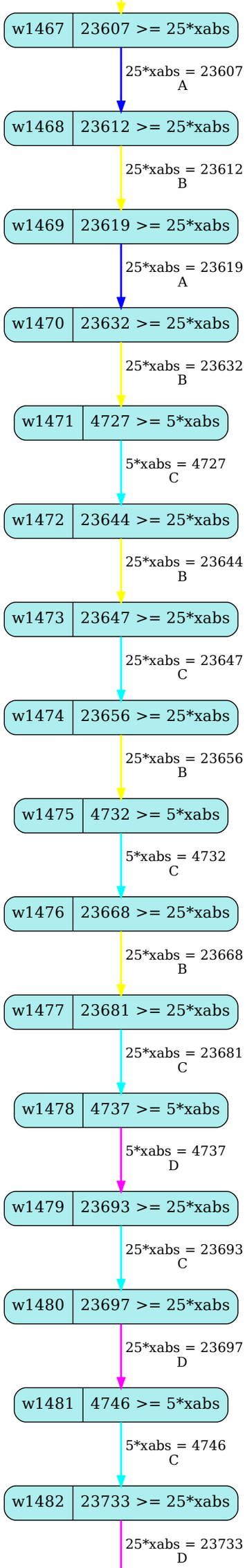
w1467
23607 >= 25*xabs
25*xabs = 23607
A
w1468
23612 >= 25*xabs
25*xabs = 23612
B
w1469
23619 >= 25*xabs
25*xabs = 23619
A
w1470
23632 >= 25*xabs
25*xabs = 23632
B
w1471
4727 >= 5*xabs
5*xabs = 4727
C
w1472
23644 >= 25*xabs
25*xabs = 23644
B
w1473
23647 >= 25*xabs
25*xabs = 23647
C
w1474
23656 >= 25*xabs
25*xabs = 23656
B
w1475
4732 >= 5*xabs
5*xabs = 4732
C
w1476
23668 >= 25*xabs
25*xabs = 23668
B
w1477
23681 >= 25*xabs
25*xabs = 23681
C
w1478
4737 >= 5*xabs
5*xabs = 4737
D
w1479
23693 >= 25*xabs
25*xabs = 23693
C
w1480
23697 >= 25*xabs
25*xabs = 23697
D
w1481
4746 >= 5*xabs
5*xabs = 4746
C
w1482
23733 >= 25*xabs
25*xabs = 23733
D

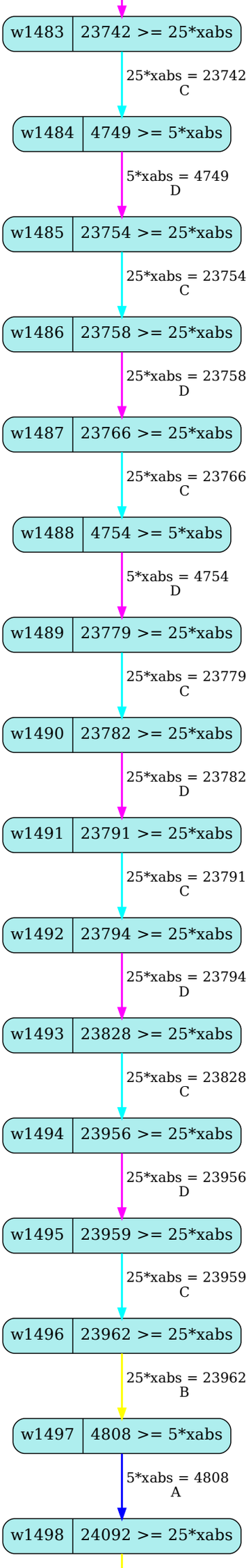
w1483
23742 >= 25*xabs
25*xabs = 23742
C
w1484
4749 >= 5*xabs
5*xabs = 4749
D
w1485
23754 >= 25*xabs
25*xabs = 23754
C
w1486
23758 >= 25*xabs
25*xabs = 23758
D
w1487
23766 >= 25*xabs
25*xabs = 23766
C
w1488
4754 >= 5*xabs
5*xabs = 4754
D
w1489
23779 >= 25*xabs
25*xabs = 23779
C
w1490
23782 >= 25*xabs
25*xabs = 23782
D
w1491
23791 >= 25*xabs
25*xabs = 23791
C
w1492
23794 >= 25*xabs
25*xabs = 23794
D
w1493
23828 >= 25*xabs
25*xabs = 23828
C
w1494
23956 >= 25*xabs
25*xabs = 23956
D
w1495
23959 >= 25*xabs
25*xabs = 23959
C
w1496
23962 >= 25*xabs
25*xabs = 23962
B
w1497
4808 >= 5*xabs
5*xabs = 4808
A
w1498
24092 >= 25*xabs

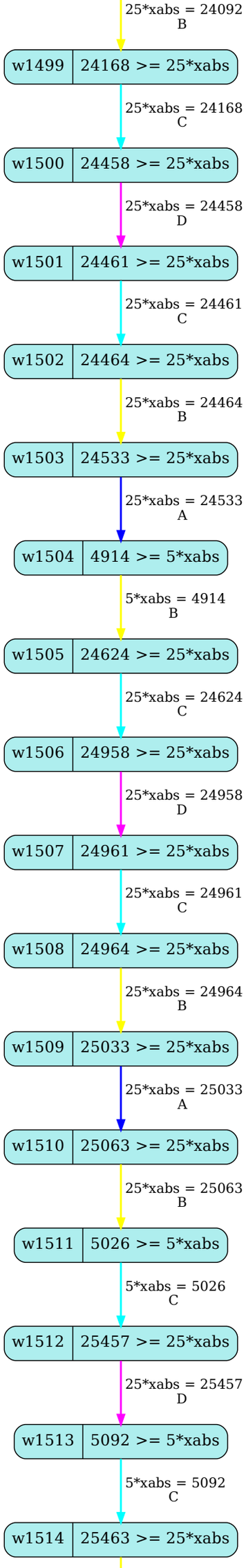
25*xabs = 24092
B
w1499
24168 >= 25*xabs
25*xabs = 24168
C
w1500
24458 >= 25*xabs
25*xabs = 24458
D
w1501
24461 >= 25*xabs
25*xabs = 24461
C
w1502
24464 >= 25*xabs
25*xabs = 24464
B
w1503
24533 >= 25*xabs
25*xabs = 24533
A
w1504
4914 >= 5*xabs
5*xabs = 4914
B
w1505
24624 >= 25*xabs
25*xabs = 24624
C
w1506
24958 >= 25*xabs
25*xabs = 24958
D
w1507
24961 >= 25*xabs
25*xabs = 24961
C
w1508
24964 >= 25*xabs
25*xabs = 24964
B
w1509
25033 >= 25*xabs
25*xabs = 25033
A
w1510
25063 >= 25*xabs
25*xabs = 25063
B
w1511
5026 >= 5*xabs
5*xabs = 5026
C
w1512
25457 >= 25*xabs
25*xabs = 25457
D
w1513
5092 >= 5*xabs
5*xabs = 5092
C
w1514
25463 >= 25*xabs

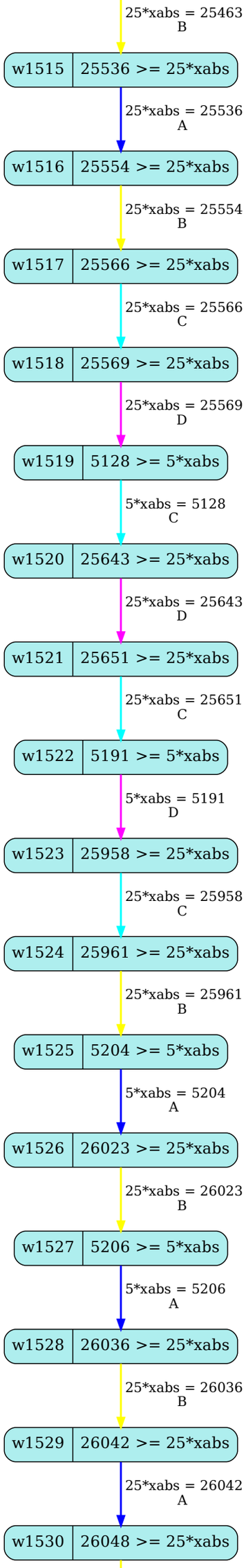
25*xabs = 25463
B
w1515
25536 >= 25*xabs
25*xabs = 25536
A
w1516
25554 >= 25*xabs
25*xabs = 25554
B
w1517
25566 >= 25*xabs
25*xabs = 25566
C
w1518
25569 >= 25*xabs
25*xabs = 25569
D
w1519
5128 >= 5*xabs
5*xabs = 5128
C
w1520
25643 >= 25*xabs
25*xabs = 25643
D
w1521
25651 >= 25*xabs
25*xabs = 25651
C
w1522
5191 >= 5*xabs
5*xabs = 5191
D
w1523
25958 >= 25*xabs
25*xabs = 25958
C
w1524
25961 >= 25*xabs
25*xabs = 25961
B
w1525
5204 >= 5*xabs
5*xabs = 5204
A
w1526
26023 >= 25*xabs
25*xabs = 26023
B
w1527
5206 >= 5*xabs
5*xabs = 5206
A
w1528
26036 >= 25*xabs
25*xabs = 26036
B
w1529
26042 >= 25*xabs
25*xabs = 26042
A
w1530
26048 >= 25*xabs

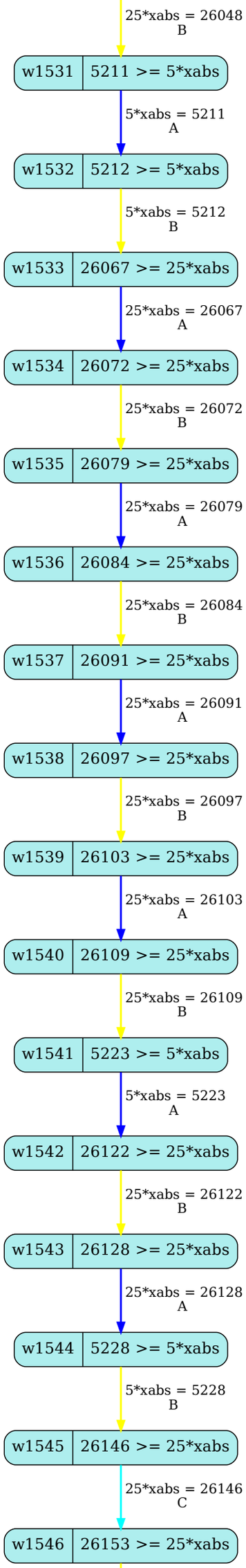
25*xabs = 26048
B
w1531
5211 >= 5*xabs
5*xabs = 5211
A
w1532
5212 >= 5*xabs
5*xabs = 5212
B
w1533
26067 >= 25*xabs
25*xabs = 26067
A
w1534
26072 >= 25*xabs
25*xabs = 26072
B
w1535
26079 >= 25*xabs
25*xabs = 26079
A
w1536
26084 >= 25*xabs
25*xabs = 26084
B
w1537
26091 >= 25*xabs
25*xabs = 26091
A
w1538
26097 >= 25*xabs
25*xabs = 26097
B
w1539
26103 >= 25*xabs
25*xabs = 26103
A
w1540
26109 >= 25*xabs
25*xabs = 26109
B
w1541
5223 >= 5*xabs
5*xabs = 5223
A
w1542
26122 >= 25*xabs
25*xabs = 26122
B
w1543
26128 >= 25*xabs
25*xabs = 26128
A
w1544
5228 >= 5*xabs
5*xabs = 5228
B
w1545
26146 >= 25*xabs
25*xabs = 26146
C
w1546
26153 >= 25*xabs

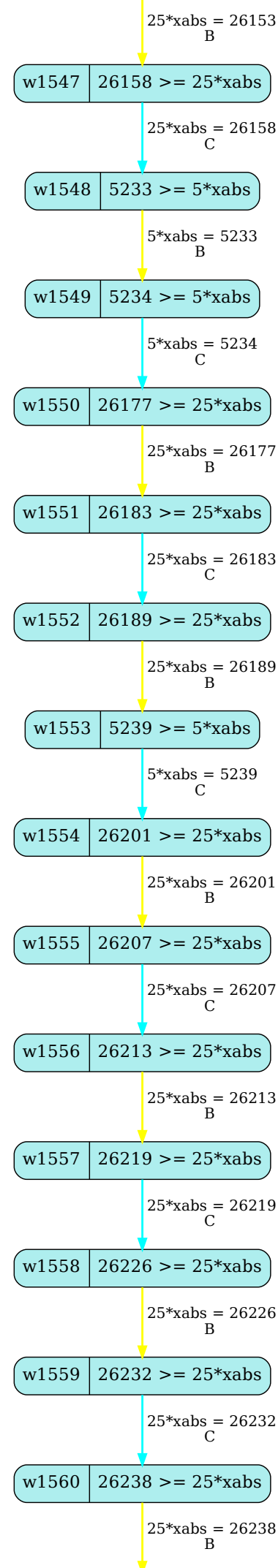
25*xabs = 26153
B
w1547
26158 >= 25*xabs
25*xabs = 26158
C
w1548
5233 >= 5*xabs
5*xabs = 5233
B
w1549
5234 >= 5*xabs
5*xabs = 5234
C
w1550
26177 >= 25*xabs
25*xabs = 26177
B
w1551
26183 >= 25*xabs
25*xabs = 26183
C
w1552
26189 >= 25*xabs
25*xabs = 26189
B
w1553
5239 >= 5*xabs
5*xabs = 5239
C
w1554
26201 >= 25*xabs
25*xabs = 26201
B
w1555
26207 >= 25*xabs
25*xabs = 26207
C
w1556
26213 >= 25*xabs
25*xabs = 26213
B
w1557
26219 >= 25*xabs
25*xabs = 26219
C
w1558
26226 >= 25*xabs
25*xabs = 26226
B
w1559
26232 >= 25*xabs
25*xabs = 26232
C
w1560
26238 >= 25*xabs
25*xabs = 26238
B

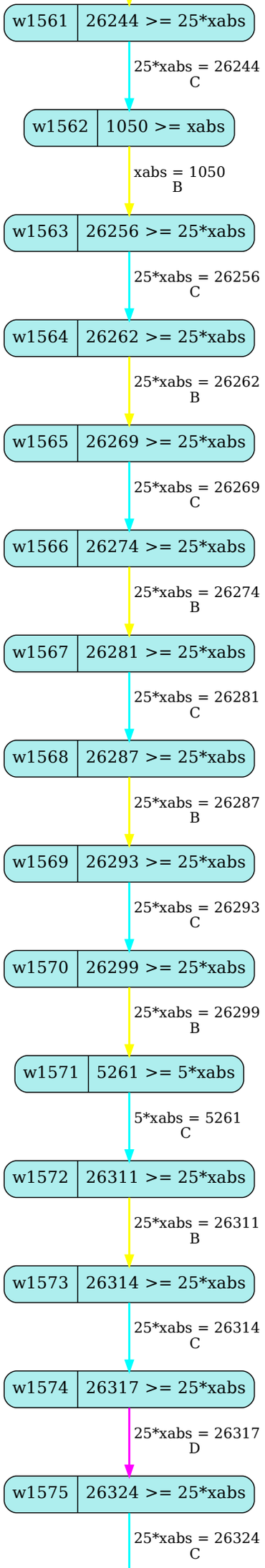
w1561
26244 >= 25*xabs
25*xabs = 26244
C
w1562
1050 >= xabs
xabs = 1050
B
w1563
26256 >= 25*xabs
25*xabs = 26256
C
w1564
26262 >= 25*xabs
25*xabs = 26262
B
w1565
26269 >= 25*xabs
25*xabs = 26269
C
w1566
26274 >= 25*xabs
25*xabs = 26274
B
w1567
26281 >= 25*xabs
25*xabs = 26281
C
w1568
26287 >= 25*xabs
25*xabs = 26287
B
w1569
26293 >= 25*xabs
25*xabs = 26293
C
w1570
26299 >= 25*xabs
25*xabs = 26299
B
w1571
5261 >= 5*xabs
5*xabs = 5261
C
w1572
26311 >= 25*xabs
25*xabs = 26311
B
w1573
26314 >= 25*xabs
25*xabs = 26314
C
w1574
26317 >= 25*xabs
25*xabs = 26317
D
w1575
26324 >= 25*xabs
25*xabs = 26324
C

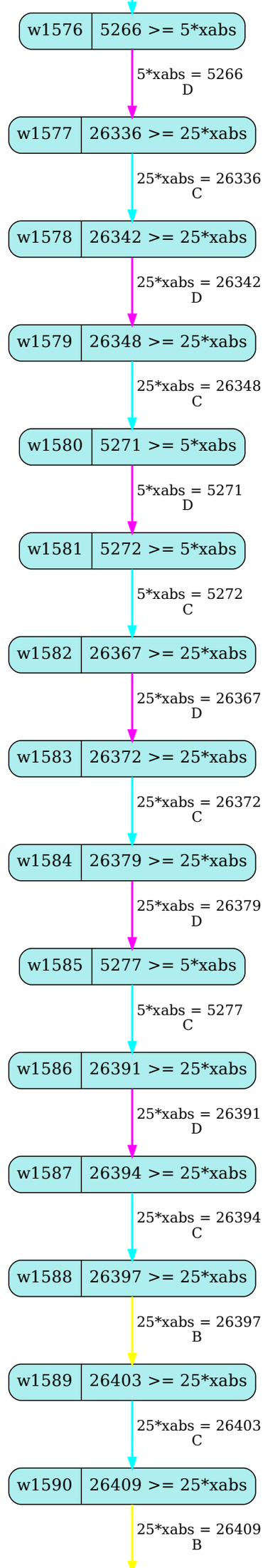
w1576
5266 >= 5*xabs
5*xabs = 5266
D
w1577
26336 >= 25*xabs
25*xabs = 26336
C
w1578
26342 >= 25*xabs
25*xabs = 26342
D
w1579
26348 >= 25*xabs
25*xabs = 26348
C
w1580
5271 >= 5*xabs
5*xabs = 5271
D
w1581
5272 >= 5*xabs
5*xabs = 5272
C
w1582
26367 >= 25*xabs
25*xabs = 26367
D
w1583
26372 >= 25*xabs
25*xabs = 26372
C
w1584
26379 >= 25*xabs
25*xabs = 26379
D
w1585
5277 >= 5*xabs
5*xabs = 5277
C
w1586
26391 >= 25*xabs
25*xabs = 26391
D
w1587
26394 >= 25*xabs
25*xabs = 26394
C
w1588
26397 >= 25*xabs
25*xabs = 26397
B
w1589
26403 >= 25*xabs
25*xabs = 26403
C
w1590
26409 >= 25*xabs
25*xabs = 26409
B

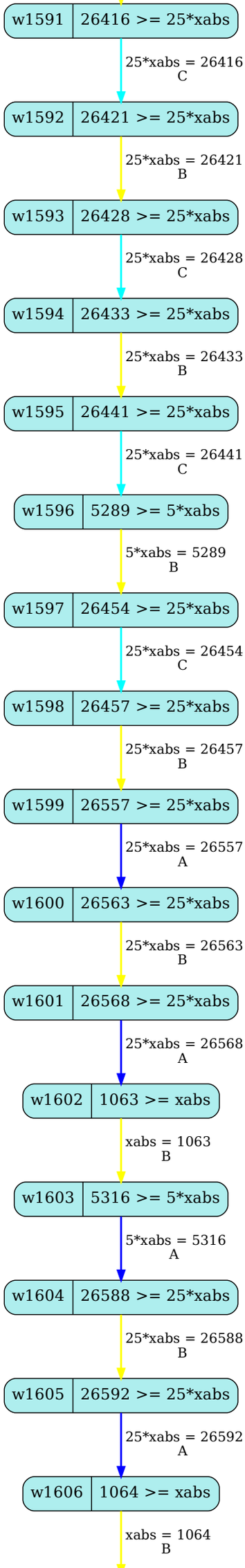
w1591
26416 >= 25*xabs
25*xabs = 26416
C
w1592
26421 >= 25*xabs
25*xabs = 26421
B
w1593
26428 >= 25*xabs
25*xabs = 26428
C
w1594
26433 >= 25*xabs
25*xabs = 26433
B
w1595
26441 >= 25*xabs
25*xabs = 26441
C
w1596
5289 >= 5*xabs
5*xabs = 5289
B
w1597
26454 >= 25*xabs
25*xabs = 26454
C
w1598
26457 >= 25*xabs
25*xabs = 26457
B
w1599
26557 >= 25*xabs
25*xabs = 26557
A
w1600
26563 >= 25*xabs
25*xabs = 26563
B
w1601
26568 >= 25*xabs
25*xabs = 26568
A
w1602
1063 >= xabs
xabs = 1063
B
w1603
5316 >= 5*xabs
5*xabs = 5316
A
w1604
26588 >= 25*xabs
25*xabs = 26588
B
w1605
26592 >= 25*xabs
25*xabs = 26592
A
w1606
1064 >= xabs
xabs = 1064
B

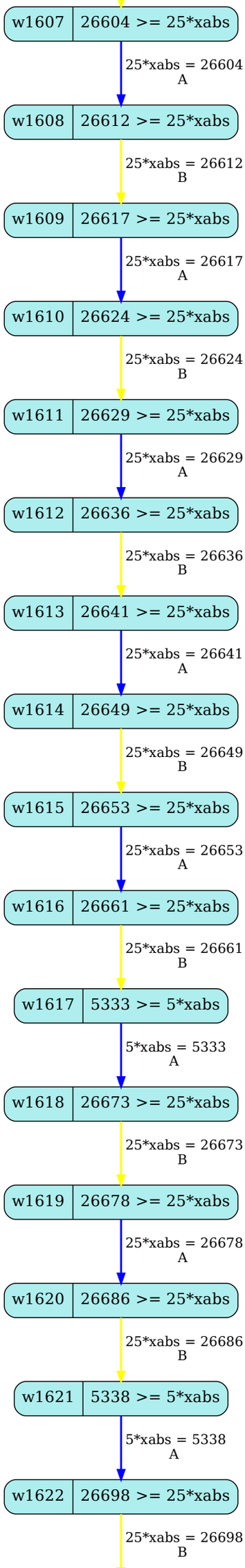
w1607
26604 >= 25*xabs
25*xabs = 26604
A
w1608
26612 >= 25*xabs
25*xabs = 26612
B
w1609
26617 >= 25*xabs
25*xabs = 26617
A
w1610
26624 >= 25*xabs
25*xabs = 26624
B
w1611
26629 >= 25*xabs
25*xabs = 26629
A
w1612
26636 >= 25*xabs
25*xabs = 26636
B
w1613
26641 >= 25*xabs
25*xabs = 26641
A
w1614
26649 >= 25*xabs
25*xabs = 26649
B
w1615
26653 >= 25*xabs
25*xabs = 26653
A
w1616
26661 >= 25*xabs
25*xabs = 26661
B
w1617
5333 >= 5*xabs
5*xabs = 5333
A
w1618
26673 >= 25*xabs
25*xabs = 26673
B
w1619
26678 >= 25*xabs
25*xabs = 26678
A
w1620
26686 >= 25*xabs
25*xabs = 26686
B
w1621
5338 >= 5*xabs
5*xabs = 5338
A
w1622
26698 >= 25*xabs
25*xabs = 26698
B

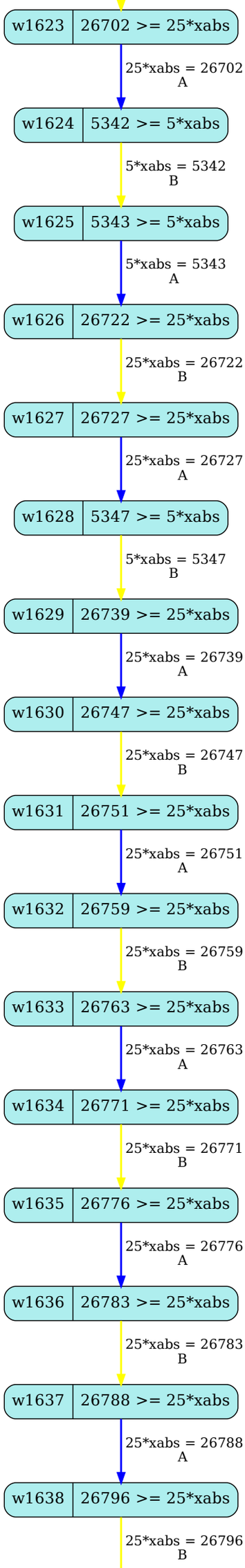
w1623
26702 >= 25*xabs
25*xabs = 26702
A
w1624
5342 >= 5*xabs
5*xabs = 5342
B
w1625
5343 >= 5*xabs
5*xabs = 5343
A
w1626
26722 >= 25*xabs
25*xabs = 26722
B
w1627
26727 >= 25*xabs
25*xabs = 26727
A
w1628
5347 >= 5*xabs
5*xabs = 5347
B
w1629
26739 >= 25*xabs
25*xabs = 26739
A
w1630
26747 >= 25*xabs
25*xabs = 26747
B
w1631
26751 >= 25*xabs
25*xabs = 26751
A
w1632
26759 >= 25*xabs
25*xabs = 26759
B
w1633
26763 >= 25*xabs
25*xabs = 26763
A
w1634
26771 >= 25*xabs
25*xabs = 26771
B
w1635
26776 >= 25*xabs
25*xabs = 26776
A
w1636
26783 >= 25*xabs
25*xabs = 26783
B
w1637
26788 >= 25*xabs
25*xabs = 26788
A
w1638
26796 >= 25*xabs
25*xabs = 26796
B

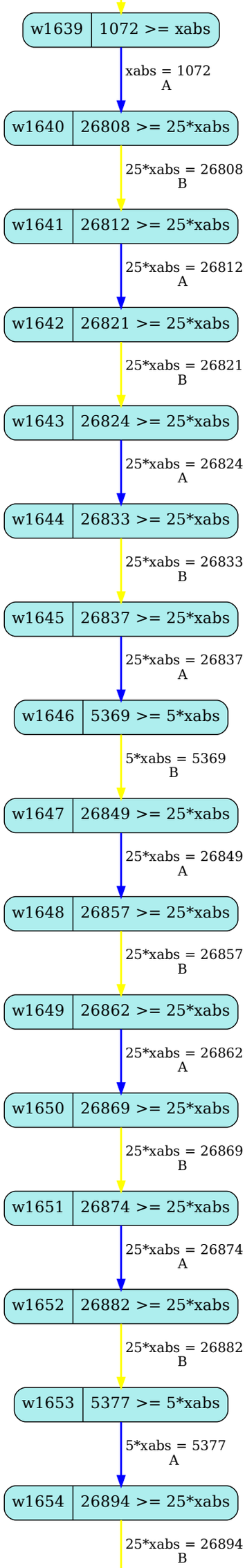
w1639
1072 >= xabs
xabs = 1072
A
w1640
26808 >= 25*xabs
25*xabs = 26808
B
w1641
26812 >= 25*xabs
25*xabs = 26812
A
w1642
26821 >= 25*xabs
25*xabs = 26821
B
w1643
26824 >= 25*xabs
25*xabs = 26824
A
w1644
26833 >= 25*xabs
25*xabs = 26833
B
w1645
26837 >= 25*xabs
25*xabs = 26837
A
w1646
5369 >= 5*xabs
5*xabs = 5369
B
w1647
26849 >= 25*xabs
25*xabs = 26849
A
w1648
26857 >= 25*xabs
25*xabs = 26857
B
w1649
26862 >= 25*xabs
25*xabs = 26862
A
w1650
26869 >= 25*xabs
25*xabs = 26869
B
w1651
26874 >= 25*xabs
25*xabs = 26874
A
w1652
26882 >= 25*xabs
25*xabs = 26882
B
w1653
5377 >= 5*xabs
5*xabs = 5377
A
w1654
26894 >= 25*xabs
25*xabs = 26894
B

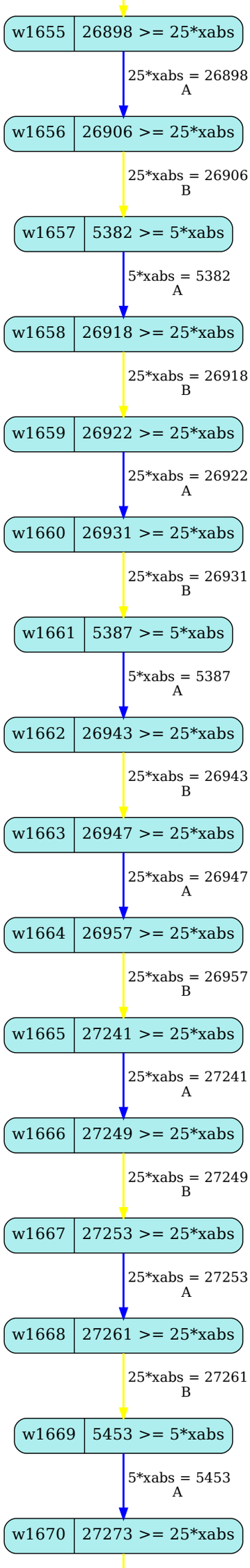
w1655
26898 >= 25*xabs
25*xabs = 26898
A
w1656
26906 >= 25*xabs
25*xabs = 26906
B
w1657
5382 >= 5*xabs
5*xabs = 5382
A
w1658
26918 >= 25*xabs
25*xabs = 26918
B
w1659
26922 >= 25*xabs
25*xabs = 26922
A
w1660
26931 >= 25*xabs
25*xabs = 26931
B
w1661
5387 >= 5*xabs
5*xabs = 5387
A
w1662
26943 >= 25*xabs
25*xabs = 26943
B
w1663
26947 >= 25*xabs
25*xabs = 26947
A
w1664
26957 >= 25*xabs
25*xabs = 26957
B
w1665
27241 >= 25*xabs
25*xabs = 27241
A
w1666
27249 >= 25*xabs
25*xabs = 27249
B
w1667
27253 >= 25*xabs
25*xabs = 27253
A
w1668
27261 >= 25*xabs
25*xabs = 27261
B
w1669
5453 >= 5*xabs
5*xabs = 5453
A
w1670
27273 >= 25*xabs

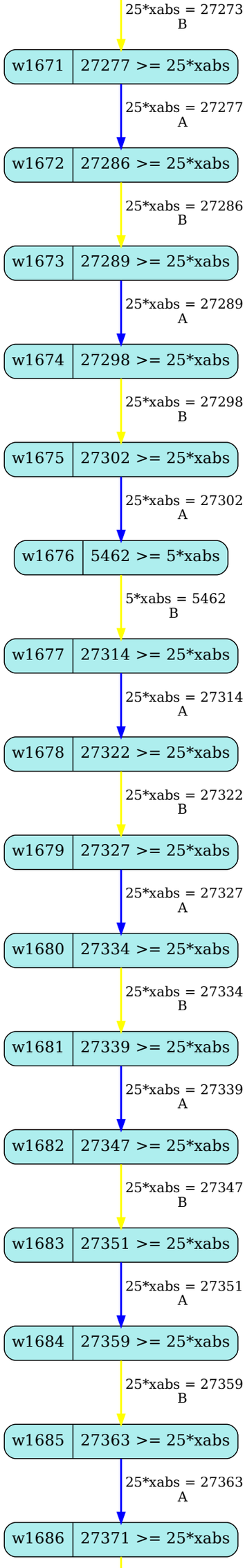
25*xabs = 27273
B
w1671
27277 >= 25*xabs
25*xabs = 27277
A
w1672
27286 >= 25*xabs
25*xabs = 27286
B
w1673
27289 >= 25*xabs
25*xabs = 27289
A
w1674
27298 >= 25*xabs
25*xabs = 27298
B
w1675
27302 >= 25*xabs
25*xabs = 27302
A
w1676
5462 >= 5*xabs
5*xabs = 5462
B
w1677
27314 >= 25*xabs
25*xabs = 27314
A
w1678
27322 >= 25*xabs
25*xabs = 27322
B
w1679
27327 >= 25*xabs
25*xabs = 27327
A
w1680
27334 >= 25*xabs
25*xabs = 27334
B
w1681
27339 >= 25*xabs
25*xabs = 27339
A
w1682
27347 >= 25*xabs
25*xabs = 27347
B
w1683
27351 >= 25*xabs
25*xabs = 27351
A
w1684
27359 >= 25*xabs
25*xabs = 27359
B
w1685
27363 >= 25*xabs
25*xabs = 27363
A
w1686
27371 >= 25*xabs

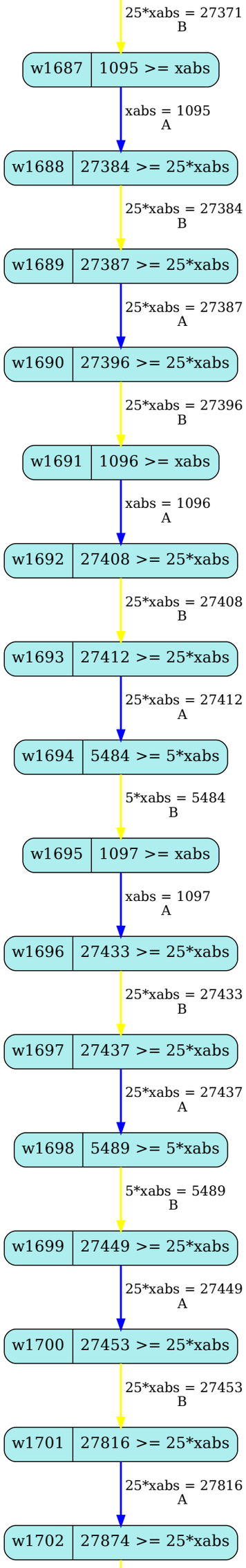
25*xabs = 27371
B
w1687
1095 >= xabs
xabs = 1095
A
w1688
27384 >= 25*xabs
25*xabs = 27384
B
w1689
27387 >= 25*xabs
25*xabs = 27387
A
w1690
27396 >= 25*xabs
25*xabs = 27396
B
w1691
1096 >= xabs
xabs = 1096
A
w1692
27408 >= 25*xabs
25*xabs = 27408
B
w1693
27412 >= 25*xabs
25*xabs = 27412
A
w1694
5484 >= 5*xabs
5*xabs = 5484
B
w1695
1097 >= xabs
xabs = 1097
A
w1696
27433 >= 25*xabs
25*xabs = 27433
B
w1697
27437 >= 25*xabs
25*xabs = 27437
A
w1698
5489 >= 5*xabs
5*xabs = 5489
B
w1699
27449 >= 25*xabs
25*xabs = 27449
A
w1700
27453 >= 25*xabs
25*xabs = 27453
B
w1701
27816 >= 25*xabs
25*xabs = 27816
A
w1702
27874 >= 25*xabs

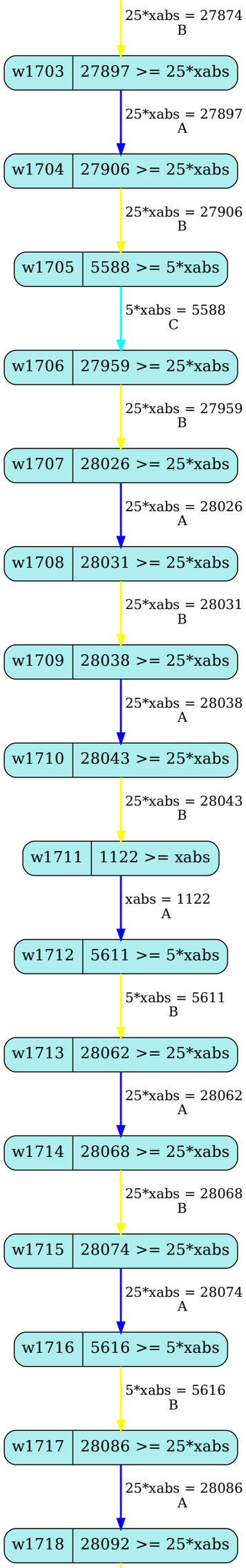
25*xabs = 27874
B
w1703
27897 >= 25*xabs
25*xabs = 27897
A
w1704
27906 >= 25*xabs
25*xabs = 27906
B
w1705
5588 >= 5*xabs
5*xabs = 5588
C
w1706
27959 >= 25*xabs
25*xabs = 27959
B
w1707
28026 >= 25*xabs
25*xabs = 28026
A
w1708
28031 >= 25*xabs
25*xabs = 28031
B
w1709
28038 >= 25*xabs
25*xabs = 28038
A
w1710
28043 >= 25*xabs
25*xabs = 28043
B
w1711
1122 >= xabs
xabs = 1122
A
w1712
5611 >= 5*xabs
5*xabs = 5611
B
w1713
28062 >= 25*xabs
25*xabs = 28062
A
w1714
28068 >= 25*xabs
25*xabs = 28068
B
w1715
28074 >= 25*xabs
25*xabs = 28074
A
w1716
5616 >= 5*xabs
5*xabs = 5616
B
w1717
28086 >= 25*xabs
25*xabs = 28086
A
w1718
28092 >= 25*xabs

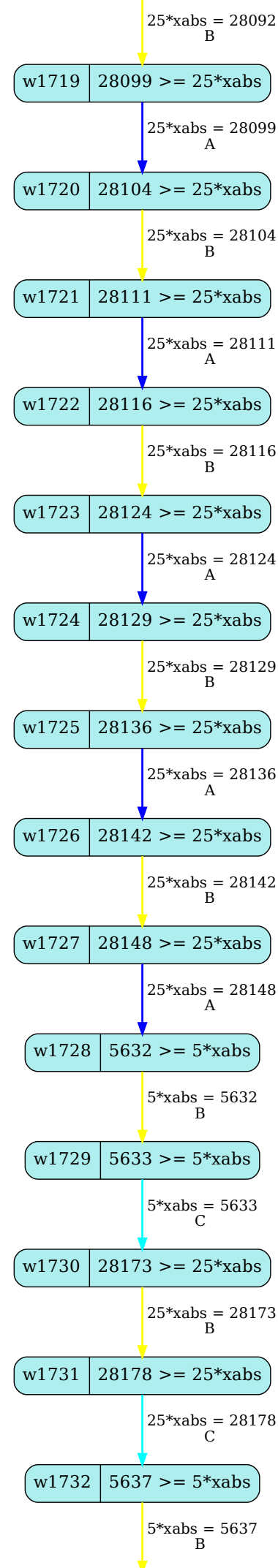
25*xabs = 28092
B
w1719
28099 >= 25*xabs
25*xabs = 28099
A
w1720
28104 >= 25*xabs
25*xabs = 28104
B
w1721
28111 >= 25*xabs
25*xabs = 28111
A
w1722
28116 >= 25*xabs
25*xabs = 28116
B
w1723
28124 >= 25*xabs
25*xabs = 28124
A
w1724
28129 >= 25*xabs
25*xabs = 28129
B
w1725
28136 >= 25*xabs
25*xabs = 28136
A
w1726
28142 >= 25*xabs
25*xabs = 28142
B
w1727
28148 >= 25*xabs
25*xabs = 28148
A
w1728
5632 >= 5*xabs
5*xabs = 5632
B
w1729
5633 >= 5*xabs
5*xabs = 5633
C
w1730
28173 >= 25*xabs
25*xabs = 28173
B
w1731
28178 >= 25*xabs
25*xabs = 28178
C
w1732
5637 >= 5*xabs
5*xabs = 5637
B

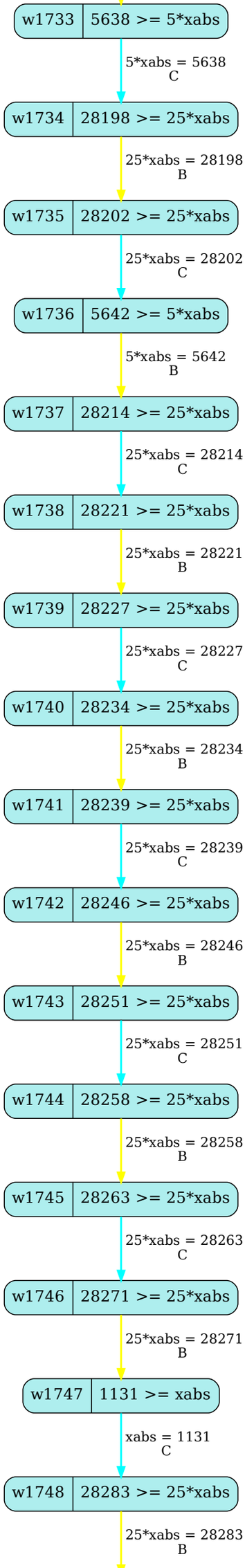
w1733
5638 >= 5*xabs
5*xabs = 5638
C
w1734
28198 >= 25*xabs
25*xabs = 28198
B
w1735
28202 >= 25*xabs
25*xabs = 28202
C
w1736
5642 >= 5*xabs
5*xabs = 5642
B
w1737
28214 >= 25*xabs
25*xabs = 28214
C
w1738
28221 >= 25*xabs
25*xabs = 28221
B
w1739
28227 >= 25*xabs
25*xabs = 28227
C
w1740
28234 >= 25*xabs
25*xabs = 28234
B
w1741
28239 >= 25*xabs
25*xabs = 28239
C
w1742
28246 >= 25*xabs
25*xabs = 28246
B
w1743
28251 >= 25*xabs
25*xabs = 28251
C
w1744
28258 >= 25*xabs
25*xabs = 28258
B
w1745
28263 >= 25*xabs
25*xabs = 28263
C
w1746
28271 >= 25*xabs
25*xabs = 28271
B
w1747
1131 >= xabs
xabs = 1131
C
w1748
28283 >= 25*xabs
25*xabs = 28283
B

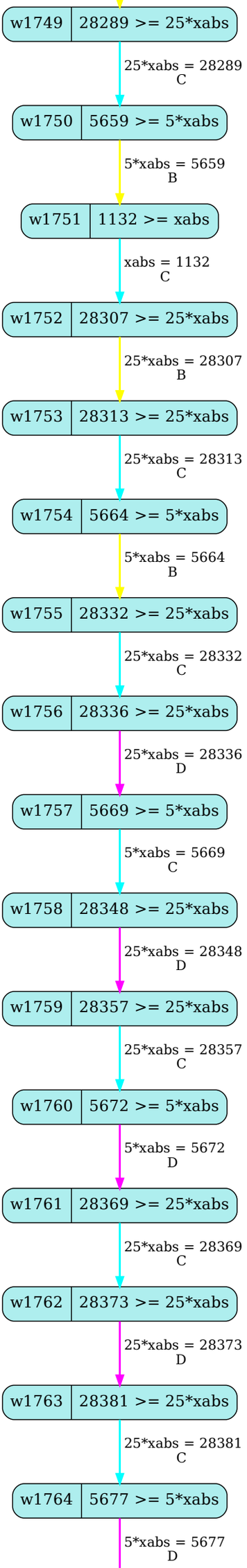
w1749
28289 >= 25*xabs
25*xabs = 28289
C
w1750
5659 >= 5*xabs
5*xabs = 5659
B
w1751
1132 >= xabs
xabs = 1132
C
w1752
28307 >= 25*xabs
25*xabs = 28307
B
w1753
28313 >= 25*xabs
25*xabs = 28313
C
w1754
5664 >= 5*xabs
5*xabs = 5664
B
w1755
28332 >= 25*xabs
25*xabs = 28332
C
w1756
28336 >= 25*xabs
25*xabs = 28336
D
w1757
5669 >= 5*xabs
5*xabs = 5669
C
w1758
28348 >= 25*xabs
25*xabs = 28348
D
w1759
28357 >= 25*xabs
25*xabs = 28357
C
w1760
5672 >= 5*xabs
5*xabs = 5672
D
w1761
28369 >= 25*xabs
25*xabs = 28369
C
w1762
28373 >= 25*xabs
25*xabs = 28373
D
w1763
28381 >= 25*xabs
25*xabs = 28381
C
w1764
5677 >= 5*xabs
5*xabs = 5677
D

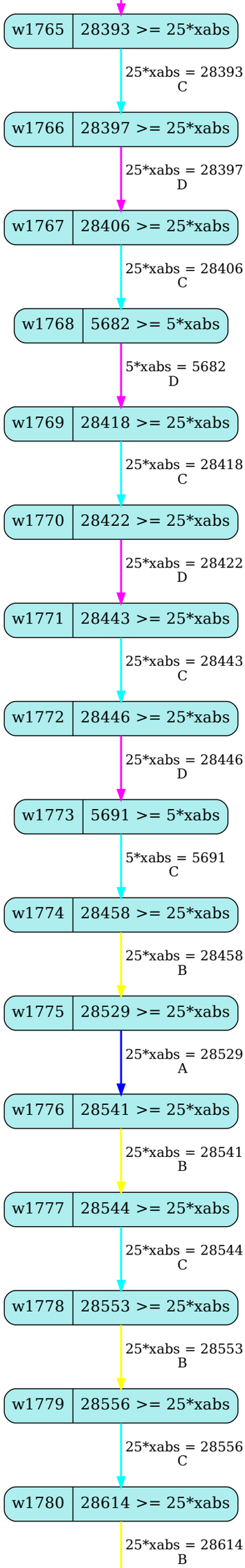
w1765
28393 >= 25*xabs
25*xabs = 28393
C
w1766
28397 >= 25*xabs
25*xabs = 28397
D
w1767
28406 >= 25*xabs
25*xabs = 28406
C
w1768
5682 >= 5*xabs
5*xabs = 5682
D
w1769
28418 >= 25*xabs
25*xabs = 28418
C
w1770
28422 >= 25*xabs
25*xabs = 28422
D
w1771
28443 >= 25*xabs
25*xabs = 28443
C
w1772
28446 >= 25*xabs
25*xabs = 28446
D
w1773
5691 >= 5*xabs
5*xabs = 5691
C
w1774
28458 >= 25*xabs
25*xabs = 28458
B
w1775
28529 >= 25*xabs
25*xabs = 28529
A
w1776
28541 >= 25*xabs
25*xabs = 28541
B
w1777
28544 >= 25*xabs
25*xabs = 28544
C
w1778
28553 >= 25*xabs
25*xabs = 28553
B
w1779
28556 >= 25*xabs
25*xabs = 28556
C
w1780
28614 >= 25*xabs
25*xabs = 28614
B

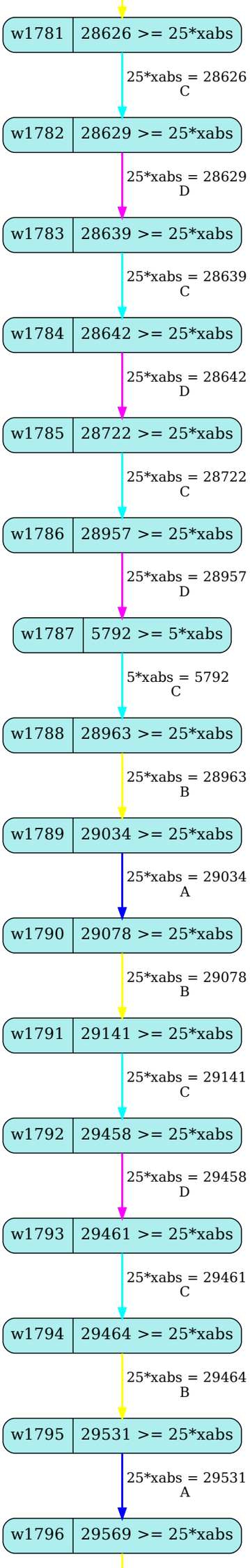
w1781
28626 >= 25*xabs
25*xabs = 28626
C
w1782
28629 >= 25*xabs
25*xabs = 28629
D
w1783
28639 >= 25*xabs
25*xabs = 28639
C
w1784
28642 >= 25*xabs
25*xabs = 28642
D
w1785
28722 >= 25*xabs
25*xabs = 28722
C
w1786
28957 >= 25*xabs
25*xabs = 28957
D
w1787
5792 >= 5*xabs
5*xabs = 5792
C
w1788
28963 >= 25*xabs
25*xabs = 28963
B
w1789
29034 >= 25*xabs
25*xabs = 29034
A
w1790
29078 >= 25*xabs
25*xabs = 29078
B
w1791
29141 >= 25*xabs
25*xabs = 29141
C
w1792
29458 >= 25*xabs
25*xabs = 29458
D
w1793
29461 >= 25*xabs
25*xabs = 29461
C
w1794
29464 >= 25*xabs
25*xabs = 29464
B
w1795
29531 >= 25*xabs
25*xabs = 29531
A
w1796
29569 >= 25*xabs

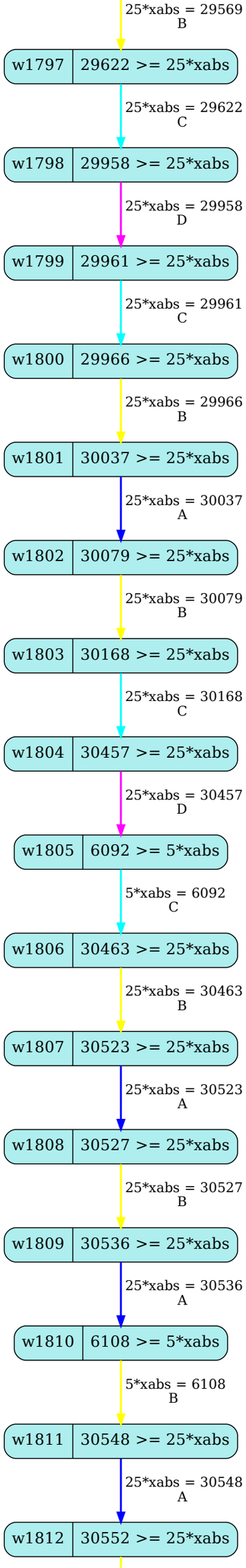
25*xabs = 29569
B
w1797
29622 >= 25*xabs
25*xabs = 29622
C
w1798
29958 >= 25*xabs
25*xabs = 29958
D
w1799
29961 >= 25*xabs
25*xabs = 29961
C
w1800
29966 >= 25*xabs
25*xabs = 29966
B
w1801
30037 >= 25*xabs
25*xabs = 30037
A
w1802
30079 >= 25*xabs
25*xabs = 30079
B
w1803
30168 >= 25*xabs
25*xabs = 30168
C
w1804
30457 >= 25*xabs
25*xabs = 30457
D
w1805
6092 >= 5*xabs
5*xabs = 6092
C
w1806
30463 >= 25*xabs
25*xabs = 30463
B
w1807
30523 >= 25*xabs
25*xabs = 30523
A
w1808
30527 >= 25*xabs
25*xabs = 30527
B
w1809
30536 >= 25*xabs
25*xabs = 30536
A
w1810
6108 >= 5*xabs
5*xabs = 6108
B
w1811
30548 >= 25*xabs
25*xabs = 30548
A
w1812
30552 >= 25*xabs

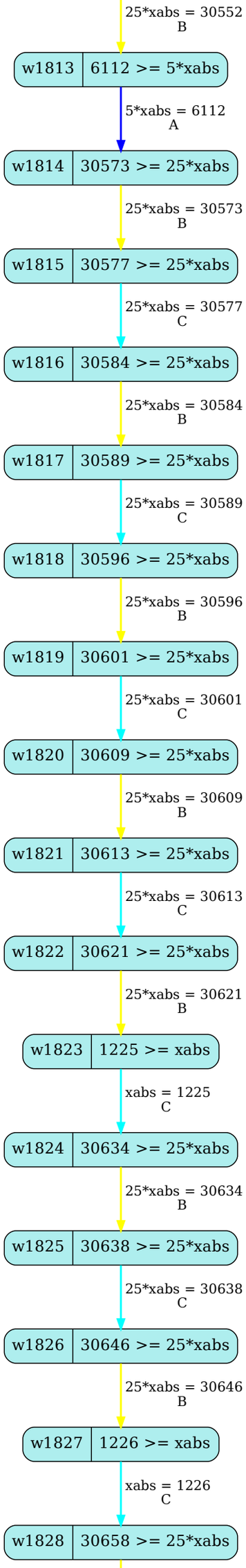
25*xabs = 30552
B
w1813
6112 >= 5*xabs
5*xabs = 6112
A
w1814
30573 >= 25*xabs
25*xabs = 30573
B
w1815
30577 >= 25*xabs
25*xabs = 30577
C
w1816
30584 >= 25*xabs
25*xabs = 30584
B
w1817
30589 >= 25*xabs
25*xabs = 30589
C
w1818
30596 >= 25*xabs
25*xabs = 30596
B
w1819
30601 >= 25*xabs
25*xabs = 30601
C
w1820
30609 >= 25*xabs
25*xabs = 30609
B
w1821
30613 >= 25*xabs
25*xabs = 30613
C
w1822
30621 >= 25*xabs
25*xabs = 30621
B
w1823
1225 >= xabs
xabs = 1225
C
w1824
30634 >= 25*xabs
25*xabs = 30634
B
w1825
30638 >= 25*xabs
25*xabs = 30638
C
w1826
30646 >= 25*xabs
25*xabs = 30646
B
w1827
1226 >= xabs
xabs = 1226
C
w1828
30658 >= 25*xabs

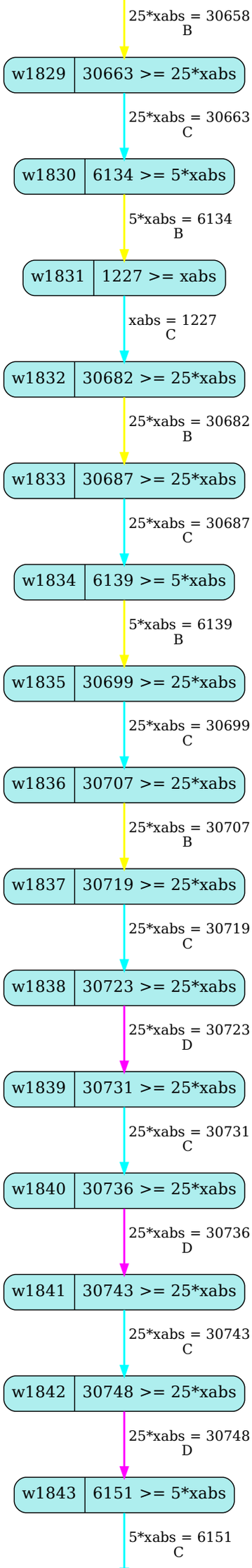
25*xabs = 30658
B
w1829
30663 >= 25*xabs
25*xabs = 30663
C
w1830
6134 >= 5*xabs
5*xabs = 6134
B
w1831
1227 >= xabs
xabs = 1227
C
w1832
30682 >= 25*xabs
25*xabs = 30682
B
w1833
30687 >= 25*xabs
25*xabs = 30687
C
w1834
6139 >= 5*xabs
5*xabs = 6139
B
w1835
30699 >= 25*xabs
25*xabs = 30699
C
w1836
30707 >= 25*xabs
25*xabs = 30707
B
w1837
30719 >= 25*xabs
25*xabs = 30719
C
w1838
30723 >= 25*xabs
25*xabs = 30723
D
w1839
30731 >= 25*xabs
25*xabs = 30731
C
w1840
30736 >= 25*xabs
25*xabs = 30736
D
w1841
30743 >= 25*xabs
25*xabs = 30743
C
w1842
30748 >= 25*xabs
25*xabs = 30748
D
w1843
6151 >= 5*xabs
5*xabs = 6151
C

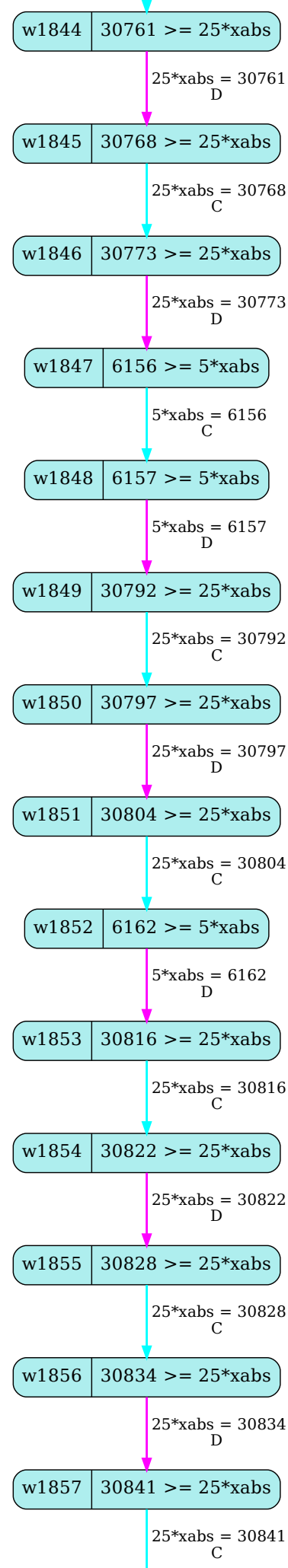
w1844
30761 >= 25*xabs
25*xabs = 30761
D
w1845
30768 >= 25*xabs
25*xabs = 30768
C
w1846
30773 >= 25*xabs
25*xabs = 30773
D
w1847
6156 >= 5*xabs
5*xabs = 6156
C
w1848
6157 >= 5*xabs
5*xabs = 6157
D
w1849
30792 >= 25*xabs
25*xabs = 30792
C
w1850
30797 >= 25*xabs
25*xabs = 30797
D
w1851
30804 >= 25*xabs
25*xabs = 30804
C
w1852
6162 >= 5*xabs
5*xabs = 6162
D
w1853
30816 >= 25*xabs
25*xabs = 30816
C
w1854
30822 >= 25*xabs
25*xabs = 30822
D
w1855
30828 >= 25*xabs
25*xabs = 30828
C
w1856
30834 >= 25*xabs
25*xabs = 30834
D
w1857
30841 >= 25*xabs
25*xabs = 30841
C

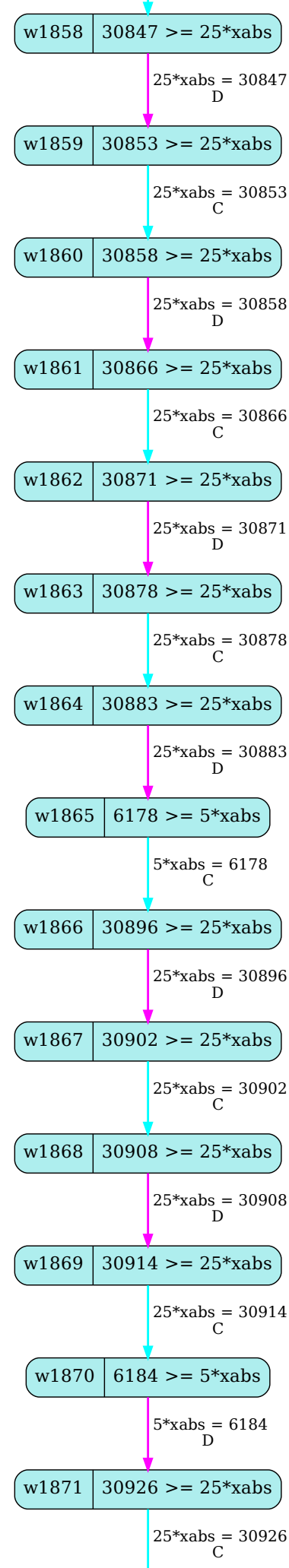
w1858
30847 >= 25*xabs
25*xabs = 30847
D
w1859
30853 >= 25*xabs
25*xabs = 30853
C
w1860
30858 >= 25*xabs
25*xabs = 30858
D
w1861
30866 >= 25*xabs
25*xabs = 30866
C
w1862
30871 >= 25*xabs
25*xabs = 30871
D
w1863
30878 >= 25*xabs
25*xabs = 30878
C
w1864
30883 >= 25*xabs
25*xabs = 30883
D
w1865
6178 >= 5*xabs
5*xabs = 6178
C
w1866
30896 >= 25*xabs
25*xabs = 30896
D
w1867
30902 >= 25*xabs
25*xabs = 30902
C
w1868
30908 >= 25*xabs
25*xabs = 30908
D
w1869
30914 >= 25*xabs
25*xabs = 30914
C
w1870
6184 >= 5*xabs
5*xabs = 6184
D
w1871
30926 >= 25*xabs
25*xabs = 30926
C

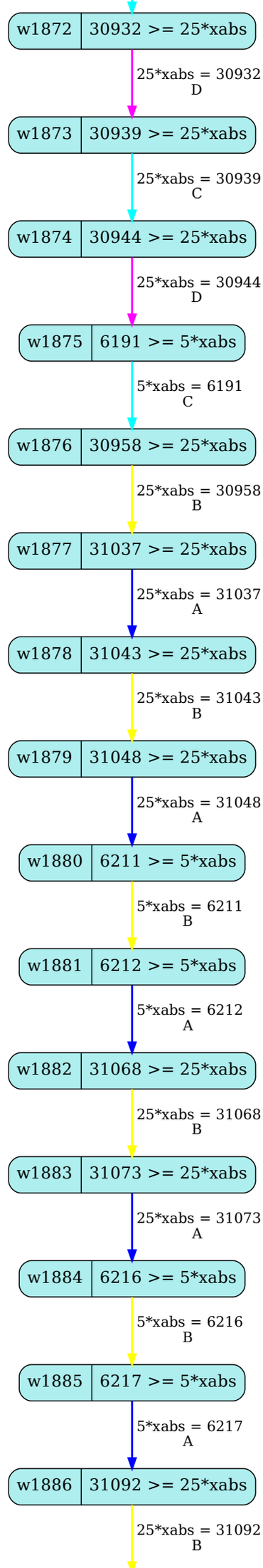
w1872
30932 >= 25*xabs
25*xabs = 30932
D
w1873
30939 >= 25*xabs
25*xabs = 30939
C
w1874
30944 >= 25*xabs
25*xabs = 30944
D
w1875
6191 >= 5*xabs
5*xabs = 6191
C
w1876
30958 >= 25*xabs
25*xabs = 30958
B
w1877
31037 >= 25*xabs
25*xabs = 31037
A
w1878
31043 >= 25*xabs
25*xabs = 31043
B
w1879
31048 >= 25*xabs
25*xabs = 31048
A
w1880
6211 >= 5*xabs
5*xabs = 6211
B
w1881
6212 >= 5*xabs
5*xabs = 6212
A
w1882
31068 >= 25*xabs
25*xabs = 31068
B
w1883
31073 >= 25*xabs
25*xabs = 31073
A
w1884
6216 >= 5*xabs
5*xabs = 6216
B
w1885
6217 >= 5*xabs
5*xabs = 6217
A
w1886
31092 >= 25*xabs
25*xabs = 31092
B

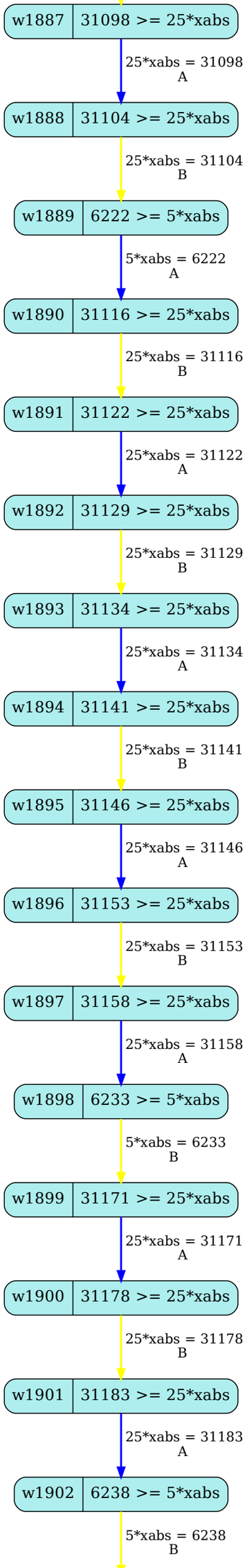
w1887
31098 >= 25*xabs
25*xabs = 31098
A
w1888
31104 >= 25*xabs
25*xabs = 31104
B
w1889
6222 >= 5*xabs
5*xabs = 6222
A
w1890
31116 >= 25*xabs
25*xabs = 31116
B
w1891
31122 >= 25*xabs
25*xabs = 31122
A
w1892
31129 >= 25*xabs
25*xabs = 31129
B
w1893
31134 >= 25*xabs
25*xabs = 31134
A
w1894
31141 >= 25*xabs
25*xabs = 31141
B
w1895
31146 >= 25*xabs
25*xabs = 31146
A
w1896
31153 >= 25*xabs
25*xabs = 31153
B
w1897
31158 >= 25*xabs
25*xabs = 31158
A
w1898
6233 >= 5*xabs
5*xabs = 6233
B
w1899
31171 >= 25*xabs
25*xabs = 31171
A
w1900
31178 >= 25*xabs
25*xabs = 31178
B
w1901
31183 >= 25*xabs
25*xabs = 31183
A
w1902
6238 >= 5*xabs
5*xabs = 6238
B

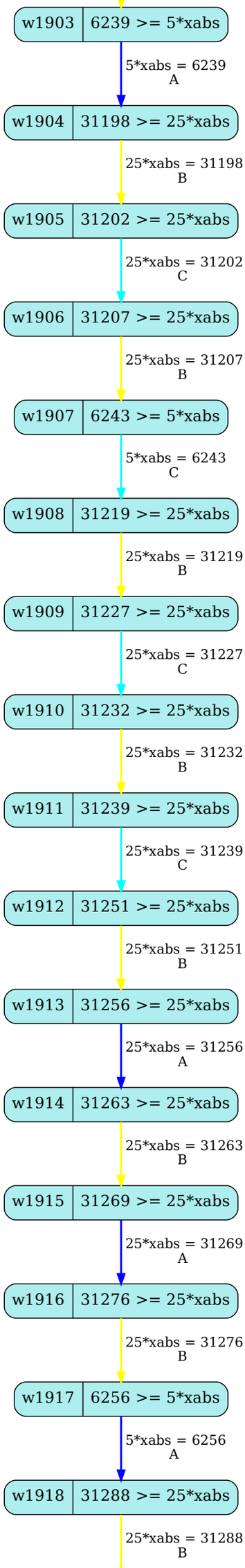
w1903
6239 >= 5*xabs
5*xabs = 6239
A
w1904
31198 >= 25*xabs
25*xabs = 31198
B
w1905
31202 >= 25*xabs
25*xabs = 31202
C
w1906
31207 >= 25*xabs
25*xabs = 31207
B
w1907
6243 >= 5*xabs
5*xabs = 6243
C
w1908
31219 >= 25*xabs
25*xabs = 31219
B
w1909
31227 >= 25*xabs
25*xabs = 31227
C
w1910
31232 >= 25*xabs
25*xabs = 31232
B
w1911
31239 >= 25*xabs
25*xabs = 31239
C
w1912
31251 >= 25*xabs
25*xabs = 31251
B
w1913
31256 >= 25*xabs
25*xabs = 31256
A
w1914
31263 >= 25*xabs
25*xabs = 31263
B
w1915
31269 >= 25*xabs
25*xabs = 31269
A
w1916
31276 >= 25*xabs
25*xabs = 31276
B
w1917
6256 >= 5*xabs
5*xabs = 6256
A
w1918
31288 >= 25*xabs
25*xabs = 31288
B

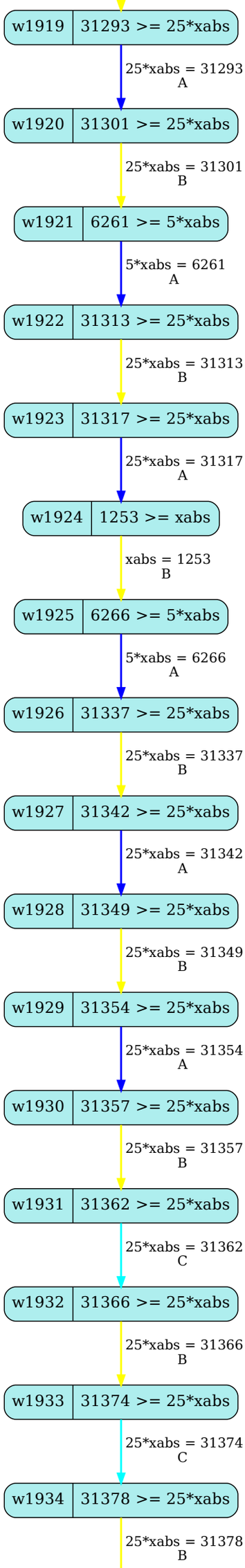
w1919
31293 >= 25*xabs
25*xabs = 31293
A
w1920
31301 >= 25*xabs
25*xabs = 31301
B
w1921
6261 >= 5*xabs
5*xabs = 6261
A
w1922
31313 >= 25*xabs
25*xabs = 31313
B
w1923
31317 >= 25*xabs
25*xabs = 31317
A
w1924
1253 >= xabs
xabs = 1253
B
w1925
6266 >= 5*xabs
5*xabs = 6266
A
w1926
31337 >= 25*xabs
25*xabs = 31337
B
w1927
31342 >= 25*xabs
25*xabs = 31342
A
w1928
31349 >= 25*xabs
25*xabs = 31349
B
w1929
31354 >= 25*xabs
25*xabs = 31354
A
w1930
31357 >= 25*xabs
25*xabs = 31357
B
w1931
31362 >= 25*xabs
25*xabs = 31362
C
w1932
31366 >= 25*xabs
25*xabs = 31366
B
w1933
31374 >= 25*xabs
25*xabs = 31374
C
w1934
31378 >= 25*xabs
25*xabs = 31378
B

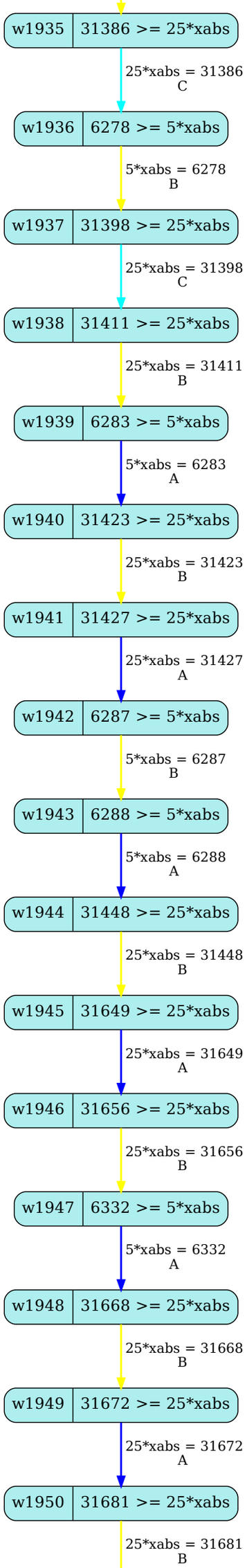
w1935
31386 >= 25*xabs
25*xabs = 31386
C
w1936
6278 >= 5*xabs
5*xabs = 6278
B
w1937
31398 >= 25*xabs
25*xabs = 31398
C
w1938
31411 >= 25*xabs
25*xabs = 31411
B
w1939
6283 >= 5*xabs
5*xabs = 6283
A
w1940
31423 >= 25*xabs
25*xabs = 31423
B
w1941
31427 >= 25*xabs
25*xabs = 31427
A
w1942
6287 >= 5*xabs
5*xabs = 6287
B
w1943
6288 >= 5*xabs
5*xabs = 6288
A
w1944
31448 >= 25*xabs
25*xabs = 31448
B
w1945
31649 >= 25*xabs
25*xabs = 31649
A
w1946
31656 >= 25*xabs
25*xabs = 31656
B
w1947
6332 >= 5*xabs
5*xabs = 6332
A
w1948
31668 >= 25*xabs
25*xabs = 31668
B
w1949
31672 >= 25*xabs
25*xabs = 31672
A
w1950
31681 >= 25*xabs
25*xabs = 31681
B

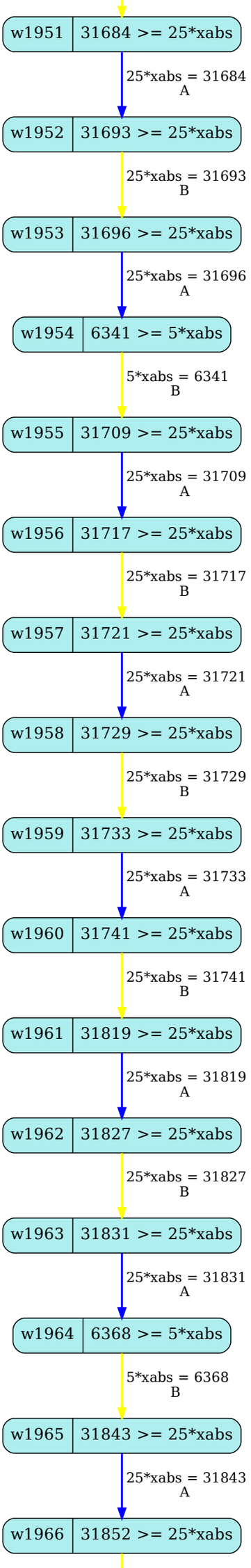
w1951
31684 >= 25*xabs
25*xabs = 31684
A
w1952
31693 >= 25*xabs
25*xabs = 31693
B
w1953
31696 >= 25*xabs
25*xabs = 31696
A
w1954
6341 >= 5*xabs
5*xabs = 6341
B
w1955
31709 >= 25*xabs
25*xabs = 31709
A
w1956
31717 >= 25*xabs
25*xabs = 31717
B
w1957
31721 >= 25*xabs
25*xabs = 31721
A
w1958
31729 >= 25*xabs
25*xabs = 31729
B
w1959
31733 >= 25*xabs
25*xabs = 31733
A
w1960
31741 >= 25*xabs
25*xabs = 31741
B
w1961
31819 >= 25*xabs
25*xabs = 31819
A
w1962
31827 >= 25*xabs
25*xabs = 31827
B
w1963
31831 >= 25*xabs
25*xabs = 31831
A
w1964
6368 >= 5*xabs
5*xabs = 6368
B
w1965
31843 >= 25*xabs
25*xabs = 31843
A
w1966
31852 >= 25*xabs

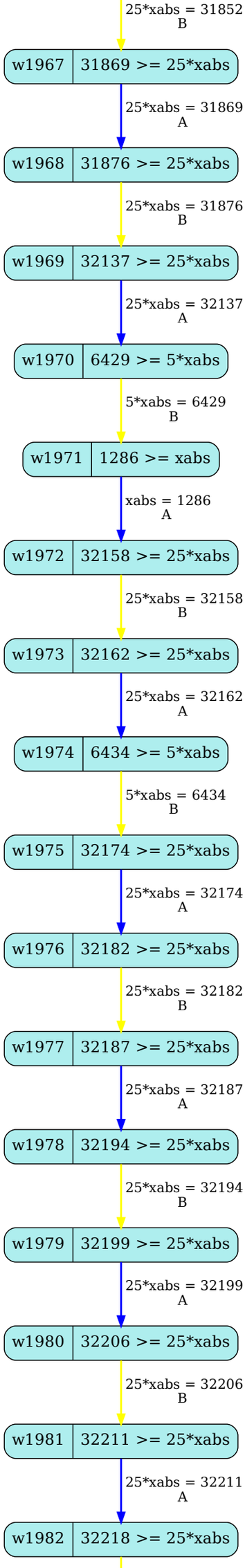
25*xabs = 31852
B
w1967
31869 >= 25*xabs
25*xabs = 31869
A
w1968
31876 >= 25*xabs
25*xabs = 31876
B
w1969
32137 >= 25*xabs
25*xabs = 32137
A
w1970
6429 >= 5*xabs
5*xabs = 6429
B
w1971
1286 >= xabs
xabs = 1286
A
w1972
32158 >= 25*xabs
25*xabs = 32158
B
w1973
32162 >= 25*xabs
25*xabs = 32162
A
w1974
6434 >= 5*xabs
5*xabs = 6434
B
w1975
32174 >= 25*xabs
25*xabs = 32174
A
w1976
32182 >= 25*xabs
25*xabs = 32182
B
w1977
32187 >= 25*xabs
25*xabs = 32187
A
w1978
32194 >= 25*xabs
25*xabs = 32194
B
w1979
32199 >= 25*xabs
25*xabs = 32199
A
w1980
32206 >= 25*xabs
25*xabs = 32206
B
w1981
32211 >= 25*xabs
25*xabs = 32211
A
w1982
32218 >= 25*xabs

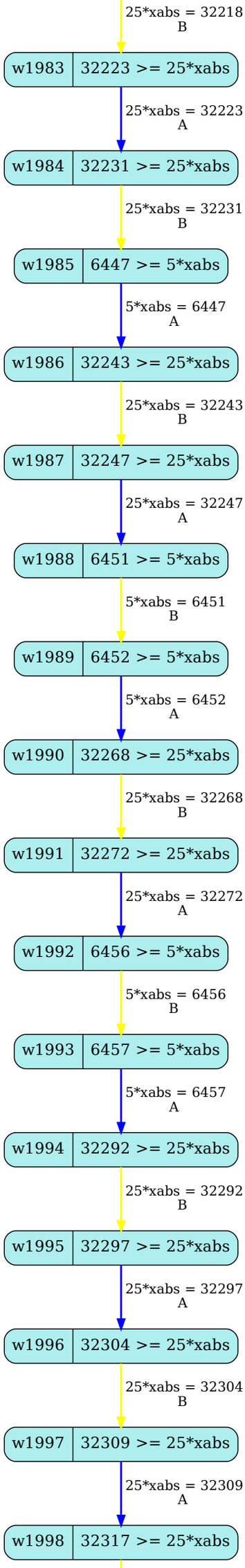
25*xabs = 32218
B
w1983
32223 >= 25*xabs
25*xabs = 32223
A
w1984
32231 >= 25*xabs
25*xabs = 32231
B
w1985
6447 >= 5*xabs
5*xabs = 6447
A
w1986
32243 >= 25*xabs
25*xabs = 32243
B
w1987
32247 >= 25*xabs
25*xabs = 32247
A
w1988
6451 >= 5*xabs
5*xabs = 6451
B
w1989
6452 >= 5*xabs
5*xabs = 6452
A
w1990
32268 >= 25*xabs
25*xabs = 32268
B
w1991
32272 >= 25*xabs
25*xabs = 32272
A
w1992
6456 >= 5*xabs
5*xabs = 6456
B
w1993
6457 >= 5*xabs
5*xabs = 6457
A
w1994
32292 >= 25*xabs
25*xabs = 32292
B
w1995
32297 >= 25*xabs
25*xabs = 32297
A
w1996
32304 >= 25*xabs
25*xabs = 32304
B
w1997
32309 >= 25*xabs
25*xabs = 32309
A
w1998
32317 >= 25*xabs

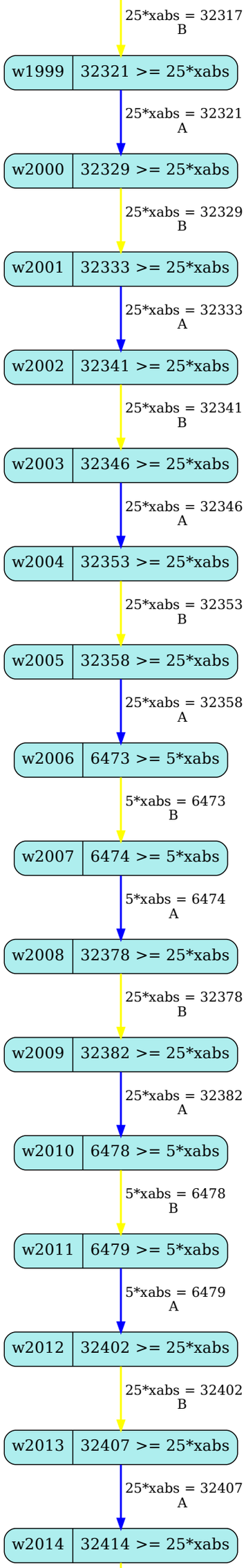
25*xabs = 32317
B
w1999
32321 >= 25*xabs
25*xabs = 32321
A
w2000
32329 >= 25*xabs
25*xabs = 32329
B
w2001
32333 >= 25*xabs
25*xabs = 32333
A
w2002
32341 >= 25*xabs
25*xabs = 32341
B
w2003
32346 >= 25*xabs
25*xabs = 32346
A
w2004
32353 >= 25*xabs
25*xabs = 32353
B
w2005
32358 >= 25*xabs
25*xabs = 32358
A
w2006
6473 >= 5*xabs
5*xabs = 6473
B
w2007
6474 >= 5*xabs
5*xabs = 6474
A
w2008
32378 >= 25*xabs
25*xabs = 32378
B
w2009
32382 >= 25*xabs
25*xabs = 32382
A
w2010
6478 >= 5*xabs
5*xabs = 6478
B
w2011
6479 >= 5*xabs
5*xabs = 6479
A
w2012
32402 >= 25*xabs
25*xabs = 32402
B
w2013
32407 >= 25*xabs
25*xabs = 32407
A
w2014
32414 >= 25*xabs

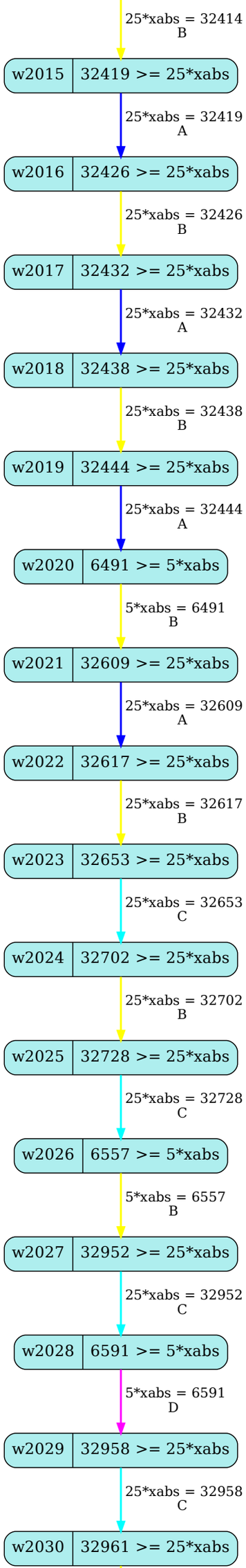
25*xabs = 32414
B
w2015
32419 >= 25*xabs
25*xabs = 32419
A
w2016
32426 >= 25*xabs
25*xabs = 32426
B
w2017
32432 >= 25*xabs
25*xabs = 32432
A
w2018
32438 >= 25*xabs
25*xabs = 32438
B
w2019
32444 >= 25*xabs
25*xabs = 32444
A
w2020
6491 >= 5*xabs
5*xabs = 6491
B
w2021
32609 >= 25*xabs
25*xabs = 32609
A
w2022
32617 >= 25*xabs
25*xabs = 32617
B
w2023
32653 >= 25*xabs
25*xabs = 32653
C
w2024
32702 >= 25*xabs
25*xabs = 32702
B
w2025
32728 >= 25*xabs
25*xabs = 32728
C
w2026
6557 >= 5*xabs
5*xabs = 6557
B
w2027
32952 >= 25*xabs
25*xabs = 32952
C
w2028
6591 >= 5*xabs
5*xabs = 6591
D
w2029
32958 >= 25*xabs
25*xabs = 32958
C
w2030
32961 >= 25*xabs

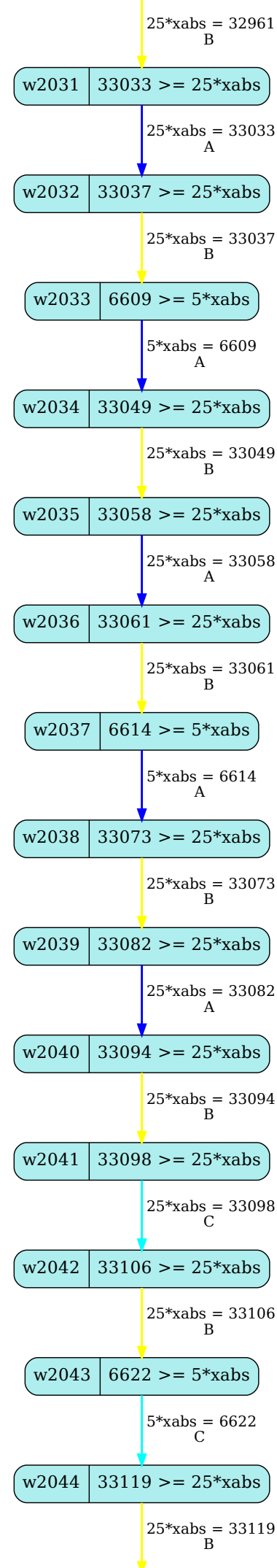
25*xabs = 32961
B
w2031
33033 >= 25*xabs
25*xabs = 33033
A
w2032
33037 >= 25*xabs
25*xabs = 33037
B
w2033
6609 >= 5*xabs
5*xabs = 6609
A
w2034
33049 >= 25*xabs
25*xabs = 33049
B
w2035
33058 >= 25*xabs
25*xabs = 33058
A
w2036
33061 >= 25*xabs
25*xabs = 33061
B
w2037
6614 >= 5*xabs
5*xabs = 6614
A
w2038
33073 >= 25*xabs
25*xabs = 33073
B
w2039
33082 >= 25*xabs
25*xabs = 33082
A
w2040
33094 >= 25*xabs
25*xabs = 33094
B
w2041
33098 >= 25*xabs
25*xabs = 33098
C
w2042
33106 >= 25*xabs
25*xabs = 33106
B
w2043
6622 >= 5*xabs
5*xabs = 6622
C
w2044
33119 >= 25*xabs
25*xabs = 33119
B

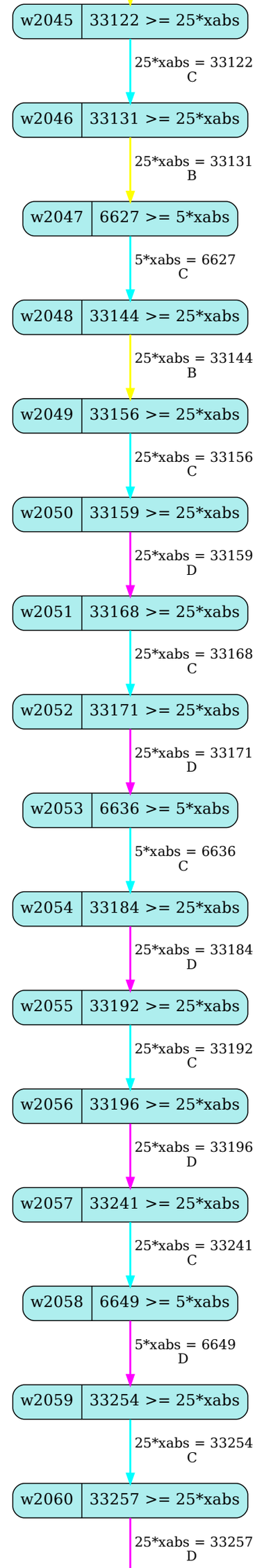
w2045
33122 >= 25*xabs
25*xabs = 33122
C
w2046
33131 >= 25*xabs
25*xabs = 33131
B
w2047
6627 >= 5*xabs
5*xabs = 6627
C
w2048
33144 >= 25*xabs
25*xabs = 33144
B
w2049
33156 >= 25*xabs
25*xabs = 33156
C
w2050
33159 >= 25*xabs
25*xabs = 33159
D
w2051
33168 >= 25*xabs
25*xabs = 33168
C
w2052
33171 >= 25*xabs
25*xabs = 33171
D
w2053
6636 >= 5*xabs
5*xabs = 6636
C
w2054
33184 >= 25*xabs
25*xabs = 33184
D
w2055
33192 >= 25*xabs
25*xabs = 33192
C
w2056
33196 >= 25*xabs
25*xabs = 33196
D
w2057
33241 >= 25*xabs
25*xabs = 33241
C
w2058
6649 >= 5*xabs
5*xabs = 6649
D
w2059
33254 >= 25*xabs
25*xabs = 33254
C
w2060
33257 >= 25*xabs
25*xabs = 33257
D

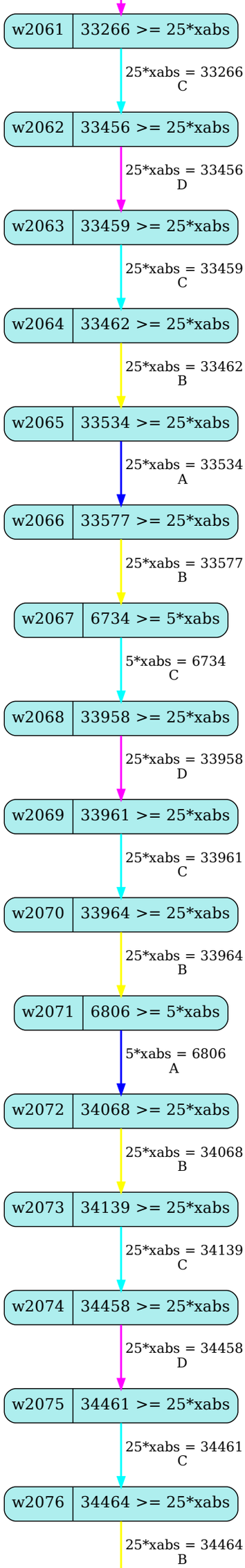
w2061
33266 >= 25*xabs
25*xabs = 33266
C
w2062
33456 >= 25*xabs
25*xabs = 33456
D
w2063
33459 >= 25*xabs
25*xabs = 33459
C
w2064
33462 >= 25*xabs
25*xabs = 33462
B
w2065
33534 >= 25*xabs
25*xabs = 33534
A
w2066
33577 >= 25*xabs
25*xabs = 33577
B
w2067
6734 >= 5*xabs
5*xabs = 6734
C
w2068
33958 >= 25*xabs
25*xabs = 33958
D
w2069
33961 >= 25*xabs
25*xabs = 33961
C
w2070
33964 >= 25*xabs
25*xabs = 33964
B
w2071
6806 >= 5*xabs
5*xabs = 6806
A
w2072
34068 >= 25*xabs
25*xabs = 34068
B
w2073
34139 >= 25*xabs
25*xabs = 34139
C
w2074
34458 >= 25*xabs
25*xabs = 34458
D
w2075
34461 >= 25*xabs
25*xabs = 34461
C
w2076
34464 >= 25*xabs
25*xabs = 34464
B

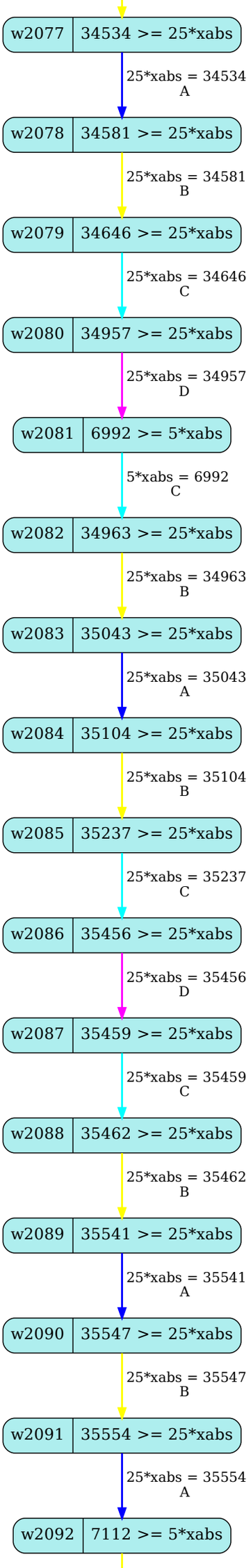
w2077
34534 >= 25*xabs
25*xabs = 34534
A
w2078
34581 >= 25*xabs
25*xabs = 34581
B
w2079
34646 >= 25*xabs
25*xabs = 34646
C
w2080
34957 >= 25*xabs
25*xabs = 34957
D
w2081
6992 >= 5*xabs
5*xabs = 6992
C
w2082
34963 >= 25*xabs
25*xabs = 34963
B
w2083
35043 >= 25*xabs
25*xabs = 35043
A
w2084
35104 >= 25*xabs
25*xabs = 35104
B
w2085
35237 >= 25*xabs
25*xabs = 35237
C
w2086
35456 >= 25*xabs
25*xabs = 35456
D
w2087
35459 >= 25*xabs
25*xabs = 35459
C
w2088
35462 >= 25*xabs
25*xabs = 35462
B
w2089
35541 >= 25*xabs
25*xabs = 35541
A
w2090
35547 >= 25*xabs
25*xabs = 35547
B
w2091
35554 >= 25*xabs
25*xabs = 35554
A
w2092
7112 >= 5*xabs

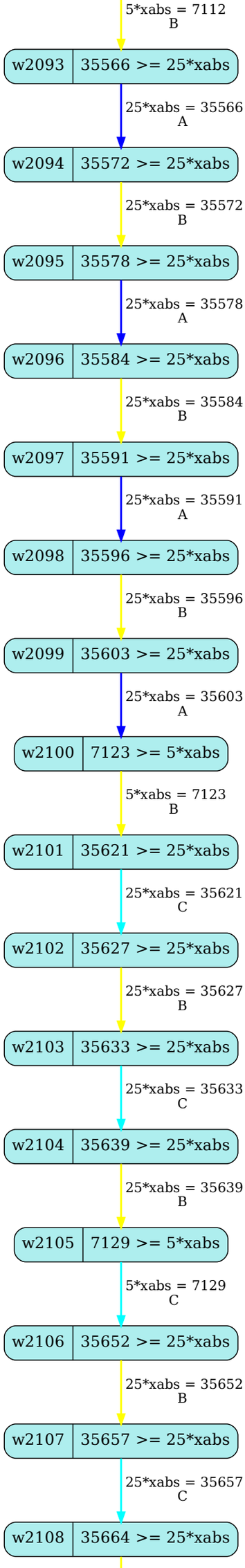
5*xabs = 7112
B
w2093
35566 >= 25*xabs
25*xabs = 35566
A
w2094
35572 >= 25*xabs
25*xabs = 35572
B
w2095
35578 >= 25*xabs
25*xabs = 35578
A
w2096
35584 >= 25*xabs
25*xabs = 35584
B
w2097
35591 >= 25*xabs
25*xabs = 35591
A
w2098
35596 >= 25*xabs
25*xabs = 35596
B
w2099
35603 >= 25*xabs
25*xabs = 35603
A
w2100
7123 >= 5*xabs
5*xabs = 7123
B
w2101
35621 >= 25*xabs
25*xabs = 35621
C
w2102
35627 >= 25*xabs
25*xabs = 35627
B
w2103
35633 >= 25*xabs
25*xabs = 35633
C
w2104
35639 >= 25*xabs
25*xabs = 35639
B
w2105
7129 >= 5*xabs
5*xabs = 7129
C
w2106
35652 >= 25*xabs
25*xabs = 35652
B
w2107
35657 >= 25*xabs
25*xabs = 35657
C
w2108
35664 >= 25*xabs

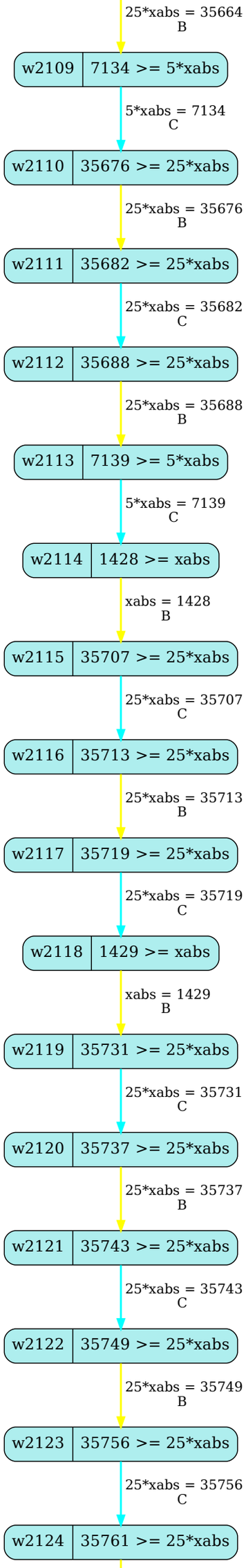
25*xabs = 35664
B
w2109
7134 >= 5*xabs
5*xabs = 7134
C
w2110
35676 >= 25*xabs
25*xabs = 35676
B
w2111
35682 >= 25*xabs
25*xabs = 35682
C
w2112
35688 >= 25*xabs
25*xabs = 35688
B
w2113
7139 >= 5*xabs
5*xabs = 7139
C
w2114
1428 >= xabs
xabs = 1428
B
w2115
35707 >= 25*xabs
25*xabs = 35707
C
w2116
35713 >= 25*xabs
25*xabs = 35713
B
w2117
35719 >= 25*xabs
25*xabs = 35719
C
w2118
1429 >= xabs
xabs = 1429
B
w2119
35731 >= 25*xabs
25*xabs = 35731
C
w2120
35737 >= 25*xabs
25*xabs = 35737
B
w2121
35743 >= 25*xabs
25*xabs = 35743
C
w2122
35749 >= 25*xabs
25*xabs = 35749
B
w2123
35756 >= 25*xabs
25*xabs = 35756
C
w2124
35761 >= 25*xabs

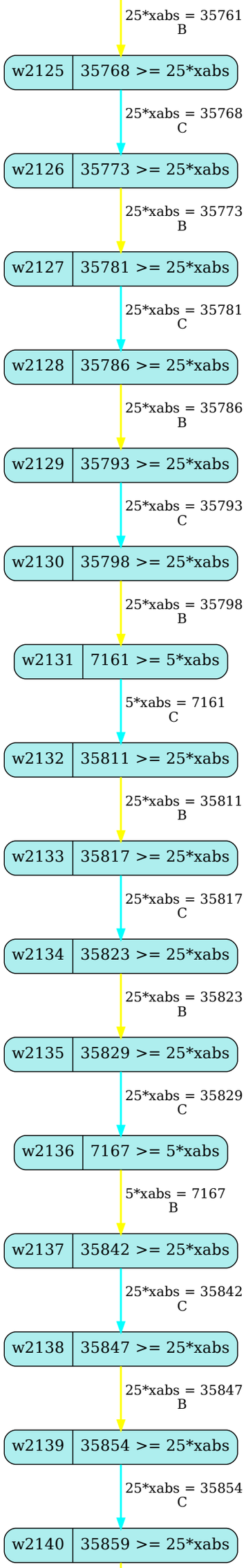
25*xabs = 35761
B
w2125
35768 >= 25*xabs
25*xabs = 35768
C
w2126
35773 >= 25*xabs
25*xabs = 35773
B
w2127
35781 >= 25*xabs
25*xabs = 35781
C
w2128
35786 >= 25*xabs
25*xabs = 35786
B
w2129
35793 >= 25*xabs
25*xabs = 35793
C
w2130
35798 >= 25*xabs
25*xabs = 35798
B
w2131
7161 >= 5*xabs
5*xabs = 7161
C
w2132
35811 >= 25*xabs
25*xabs = 35811
B
w2133
35817 >= 25*xabs
25*xabs = 35817
C
w2134
35823 >= 25*xabs
25*xabs = 35823
B
w2135
35829 >= 25*xabs
25*xabs = 35829
C
w2136
7167 >= 5*xabs
5*xabs = 7167
B
w2137
35842 >= 25*xabs
25*xabs = 35842
C
w2138
35847 >= 25*xabs
25*xabs = 35847
B
w2139
35854 >= 25*xabs
25*xabs = 35854
C
w2140
35859 >= 25*xabs

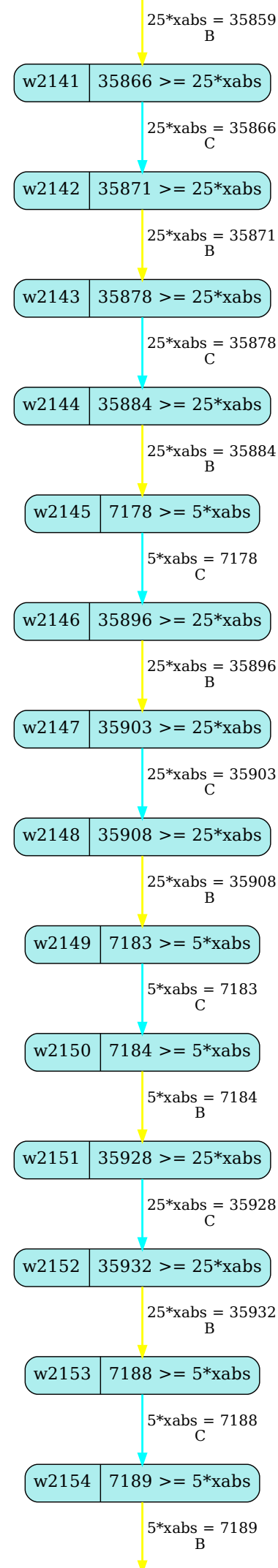
25*xabs = 35859
B
w2141
35866 >= 25*xabs
25*xabs = 35866
C
w2142
35871 >= 25*xabs
25*xabs = 35871
B
w2143
35878 >= 25*xabs
25*xabs = 35878
C
w2144
35884 >= 25*xabs
25*xabs = 35884
B
w2145
7178 >= 5*xabs
5*xabs = 7178
C
w2146
35896 >= 25*xabs
25*xabs = 35896
B
w2147
35903 >= 25*xabs
25*xabs = 35903
C
w2148
35908 >= 25*xabs
25*xabs = 35908
B
w2149
7183 >= 5*xabs
5*xabs = 7183
C
w2150
7184 >= 5*xabs
5*xabs = 7184
B
w2151
35928 >= 25*xabs
25*xabs = 35928
C
w2152
35932 >= 25*xabs
25*xabs = 35932
B
w2153
7188 >= 5*xabs
5*xabs = 7188
C
w2154
7189 >= 5*xabs
5*xabs = 7189
B

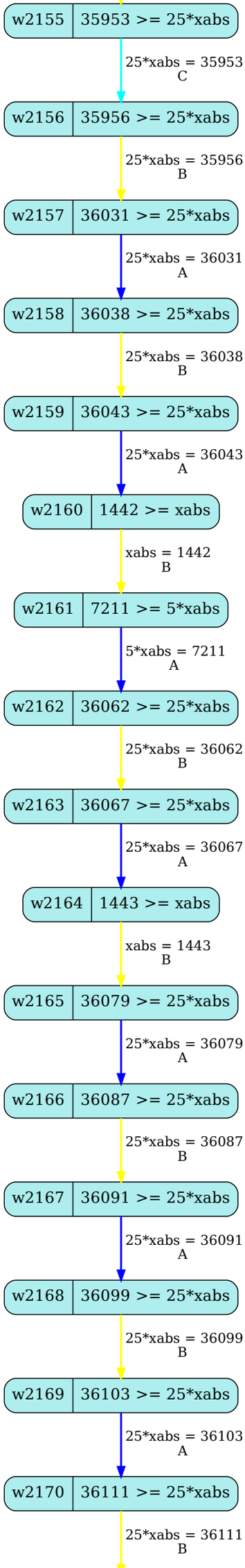
w2155
35953 >= 25*xabs
25*xabs = 35953
C
w2156
35956 >= 25*xabs
25*xabs = 35956
B
w2157
36031 >= 25*xabs
25*xabs = 36031
A
w2158
36038 >= 25*xabs
25*xabs = 36038
B
w2159
36043 >= 25*xabs
25*xabs = 36043
A
w2160
1442 >= xabs
xabs = 1442
B
w2161
7211 >= 5*xabs
5*xabs = 7211
A
w2162
36062 >= 25*xabs
25*xabs = 36062
B
w2163
36067 >= 25*xabs
25*xabs = 36067
A
w2164
1443 >= xabs
xabs = 1443
B
w2165
36079 >= 25*xabs
25*xabs = 36079
A
w2166
36087 >= 25*xabs
25*xabs = 36087
B
w2167
36091 >= 25*xabs
25*xabs = 36091
A
w2168
36099 >= 25*xabs
25*xabs = 36099
B
w2169
36103 >= 25*xabs
25*xabs = 36103
A
w2170
36111 >= 25*xabs
25*xabs = 36111
B

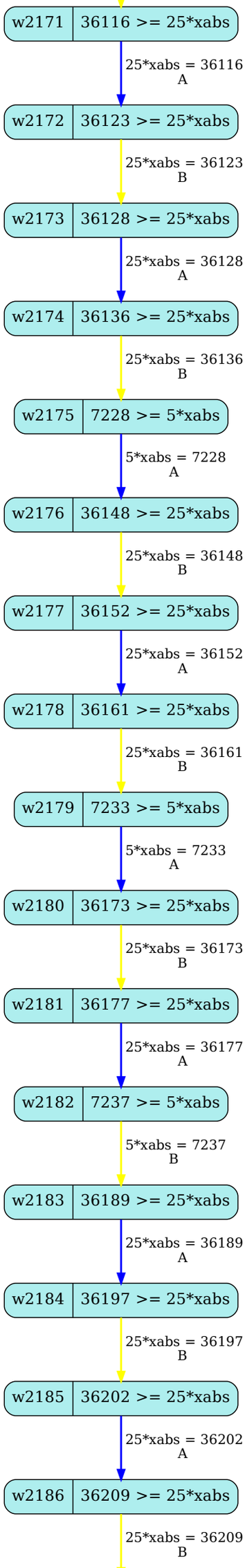
w2171
36116 >= 25*xabs
25*xabs = 36116
A
w2172
36123 >= 25*xabs
25*xabs = 36123
B
w2173
36128 >= 25*xabs
25*xabs = 36128
A
w2174
36136 >= 25*xabs
25*xabs = 36136
B
w2175
7228 >= 5*xabs
5*xabs = 7228
A
w2176
36148 >= 25*xabs
25*xabs = 36148
B
w2177
36152 >= 25*xabs
25*xabs = 36152
A
w2178
36161 >= 25*xabs
25*xabs = 36161
B
w2179
7233 >= 5*xabs
5*xabs = 7233
A
w2180
36173 >= 25*xabs
25*xabs = 36173
B
w2181
36177 >= 25*xabs
25*xabs = 36177
A
w2182
7237 >= 5*xabs
5*xabs = 7237
B
w2183
36189 >= 25*xabs
25*xabs = 36189
A
w2184
36197 >= 25*xabs
25*xabs = 36197
B
w2185
36202 >= 25*xabs
25*xabs = 36202
A
w2186
36209 >= 25*xabs
25*xabs = 36209
B

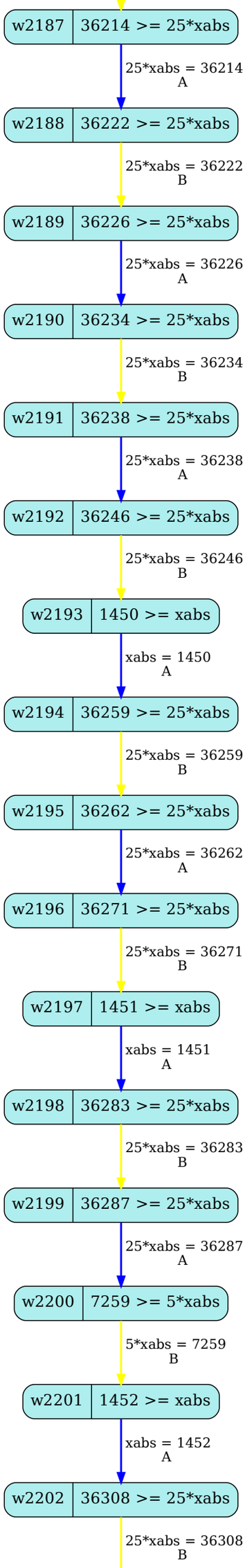
w2187
36214 >= 25*xabs
25*xabs = 36214
A
w2188
36222 >= 25*xabs
25*xabs = 36222
B
w2189
36226 >= 25*xabs
25*xabs = 36226
A
w2190
36234 >= 25*xabs
25*xabs = 36234
B
w2191
36238 >= 25*xabs
25*xabs = 36238
A
w2192
36246 >= 25*xabs
25*xabs = 36246
B
w2193
1450 >= xabs
xabs = 1450
A
w2194
36259 >= 25*xabs
25*xabs = 36259
B
w2195
36262 >= 25*xabs
25*xabs = 36262
A
w2196
36271 >= 25*xabs
25*xabs = 36271
B
w2197
1451 >= xabs
xabs = 1451
A
w2198
36283 >= 25*xabs
25*xabs = 36283
B
w2199
36287 >= 25*xabs
25*xabs = 36287
A
w2200
7259 >= 5*xabs
5*xabs = 7259
B
w2201
1452 >= xabs
xabs = 1452
A
w2202
36308 >= 25*xabs
25*xabs = 36308
B

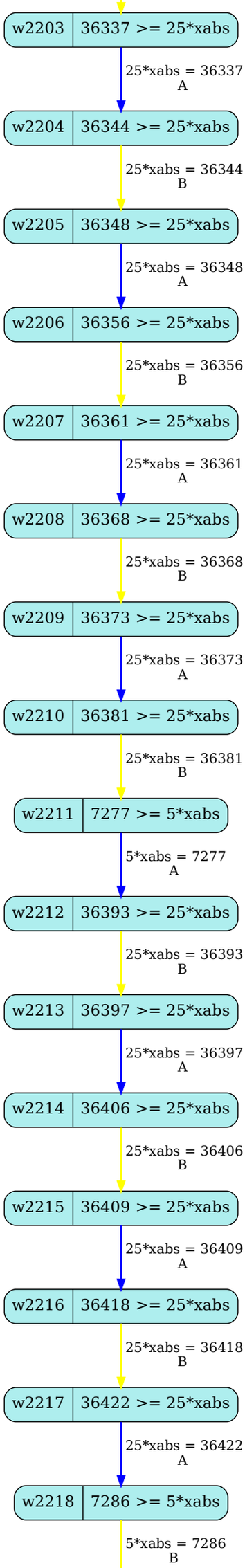
w2203
36337 >= 25*xabs
25*xabs = 36337
A
w2204
36344 >= 25*xabs
25*xabs = 36344
B
w2205
36348 >= 25*xabs
25*xabs = 36348
A
w2206
36356 >= 25*xabs
25*xabs = 36356
B
w2207
36361 >= 25*xabs
25*xabs = 36361
A
w2208
36368 >= 25*xabs
25*xabs = 36368
B
w2209
36373 >= 25*xabs
25*xabs = 36373
A
w2210
36381 >= 25*xabs
25*xabs = 36381
B
w2211
7277 >= 5*xabs
5*xabs = 7277
A
w2212
36393 >= 25*xabs
25*xabs = 36393
B
w2213
36397 >= 25*xabs
25*xabs = 36397
A
w2214
36406 >= 25*xabs
25*xabs = 36406
B
w2215
36409 >= 25*xabs
25*xabs = 36409
A
w2216
36418 >= 25*xabs
25*xabs = 36418
B
w2217
36422 >= 25*xabs
25*xabs = 36422
A
w2218
7286 >= 5*xabs
5*xabs = 7286
B

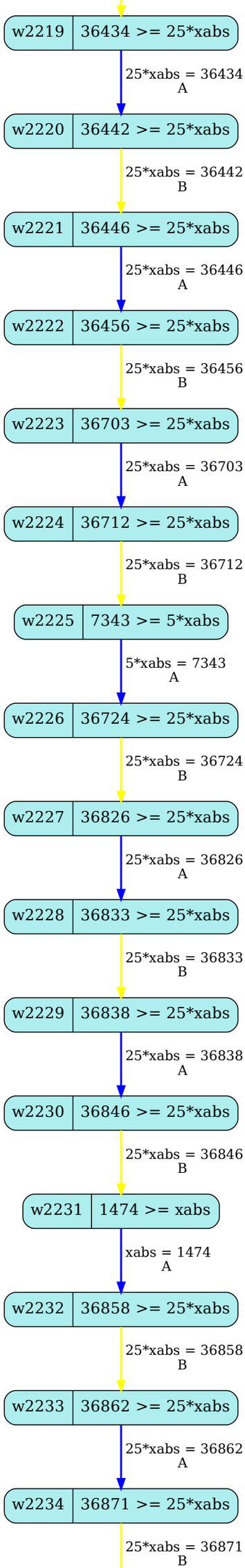
w2219
36434 >= 25*xabs
25*xabs = 36434
A
w2220
36442 >= 25*xabs
25*xabs = 36442
B
w2221
36446 >= 25*xabs
25*xabs = 36446
A
w2222
36456 >= 25*xabs
25*xabs = 36456
B
w2223
36703 >= 25*xabs
25*xabs = 36703
A
w2224
36712 >= 25*xabs
25*xabs = 36712
B
w2225
7343 >= 5*xabs
5*xabs = 7343
A
w2226
36724 >= 25*xabs
25*xabs = 36724
B
w2227
36826 >= 25*xabs
25*xabs = 36826
A
w2228
36833 >= 25*xabs
25*xabs = 36833
B
w2229
36838 >= 25*xabs
25*xabs = 36838
A
w2230
36846 >= 25*xabs
25*xabs = 36846
B
w2231
1474 >= xabs
xabs = 1474
A
w2232
36858 >= 25*xabs
25*xabs = 36858
B
w2233
36862 >= 25*xabs
25*xabs = 36862
A
w2234
36871 >= 25*xabs
25*xabs = 36871
B

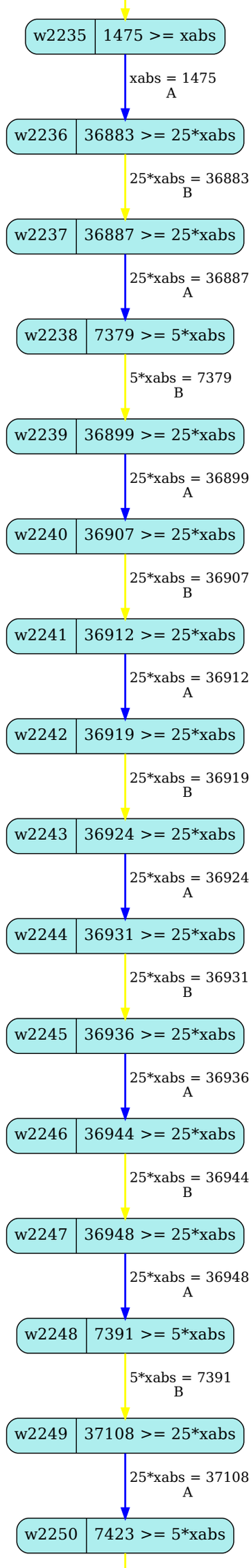
w2235
1475 >= xabs
xabs = 1475
A
w2236
36883 >= 25*xabs
25*xabs = 36883
B
w2237
36887 >= 25*xabs
25*xabs = 36887
A
w2238
7379 >= 5*xabs
5*xabs = 7379
B
w2239
36899 >= 25*xabs
25*xabs = 36899
A
w2240
36907 >= 25*xabs
25*xabs = 36907
B
w2241
36912 >= 25*xabs
25*xabs = 36912
A
w2242
36919 >= 25*xabs
25*xabs = 36919
B
w2243
36924 >= 25*xabs
25*xabs = 36924
A
w2244
36931 >= 25*xabs
25*xabs = 36931
B
w2245
36936 >= 25*xabs
25*xabs = 36936
A
w2246
36944 >= 25*xabs
25*xabs = 36944
B
w2247
36948 >= 25*xabs
25*xabs = 36948
A
w2248
7391 >= 5*xabs
5*xabs = 7391
B
w2249
37108 >= 25*xabs
25*xabs = 37108
A
w2250
7423 >= 5*xabs

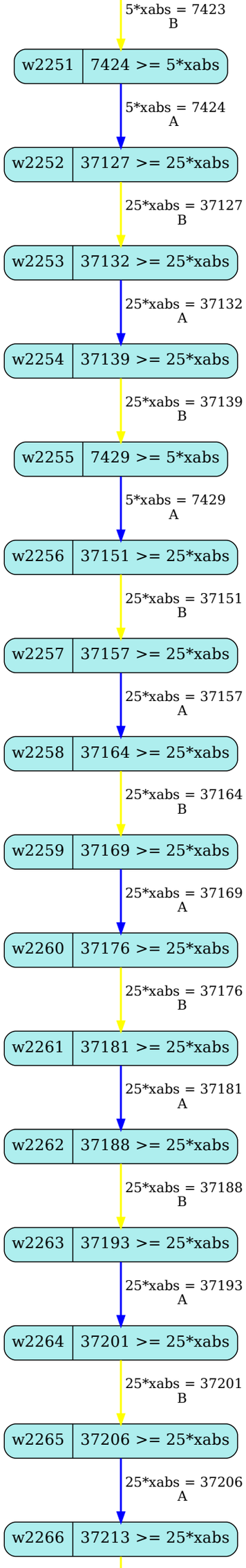
5*xabs = 7423
B
w2251
7424 >= 5*xabs
5*xabs = 7424
A
w2252
37127 >= 25*xabs
25*xabs = 37127
B
w2253
37132 >= 25*xabs
25*xabs = 37132
A
w2254
37139 >= 25*xabs
25*xabs = 37139
B
w2255
7429 >= 5*xabs
5*xabs = 7429
A
w2256
37151 >= 25*xabs
25*xabs = 37151
B
w2257
37157 >= 25*xabs
25*xabs = 37157
A
w2258
37164 >= 25*xabs
25*xabs = 37164
B
w2259
37169 >= 25*xabs
25*xabs = 37169
A
w2260
37176 >= 25*xabs
25*xabs = 37176
B
w2261
37181 >= 25*xabs
25*xabs = 37181
A
w2262
37188 >= 25*xabs
25*xabs = 37188
B
w2263
37193 >= 25*xabs
25*xabs = 37193
A
w2264
37201 >= 25*xabs
25*xabs = 37201
B
w2265
37206 >= 25*xabs
25*xabs = 37206
A
w2266
37213 >= 25*xabs

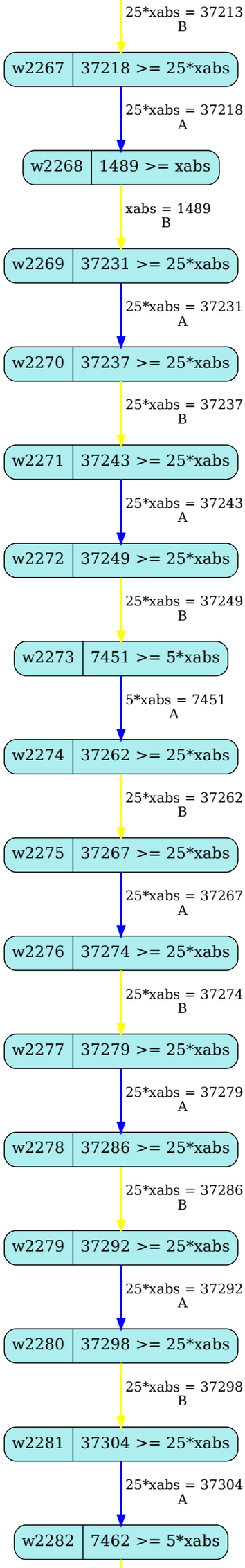
25*xabs = 37213
B
w2267
37218 >= 25*xabs
25*xabs = 37218
A
w2268
1489 >= xabs
xabs = 1489
B
w2269
37231 >= 25*xabs
25*xabs = 37231
A
w2270
37237 >= 25*xabs
25*xabs = 37237
B
w2271
37243 >= 25*xabs
25*xabs = 37243
A
w2272
37249 >= 25*xabs
25*xabs = 37249
B
w2273
7451 >= 5*xabs
5*xabs = 7451
A
w2274
37262 >= 25*xabs
25*xabs = 37262
B
w2275
37267 >= 25*xabs
25*xabs = 37267
A
w2276
37274 >= 25*xabs
25*xabs = 37274
B
w2277
37279 >= 25*xabs
25*xabs = 37279
A
w2278
37286 >= 25*xabs
25*xabs = 37286
B
w2279
37292 >= 25*xabs
25*xabs = 37292
A
w2280
37298 >= 25*xabs
25*xabs = 37298
B
w2281
37304 >= 25*xabs
25*xabs = 37304
A
w2282
7462 >= 5*xabs

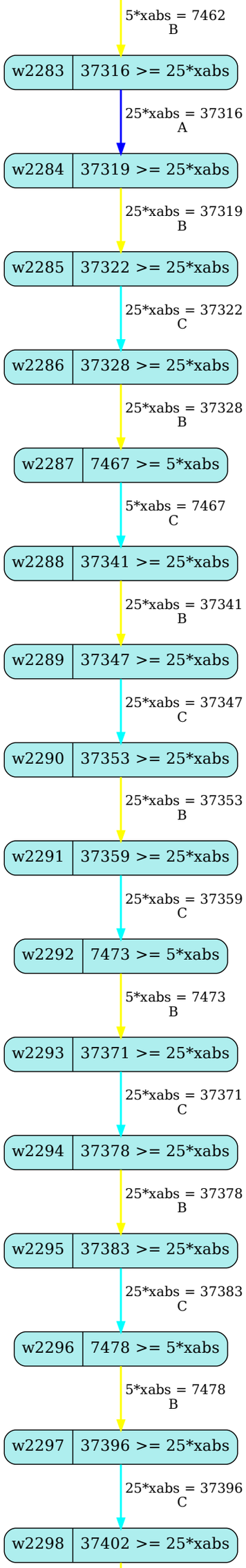
5*xabs = 7462
B
w2283
37316 >= 25*xabs
25*xabs = 37316
A
w2284
37319 >= 25*xabs
25*xabs = 37319
B
w2285
37322 >= 25*xabs
25*xabs = 37322
C
w2286
37328 >= 25*xabs
25*xabs = 37328
B
w2287
7467 >= 5*xabs
5*xabs = 7467
C
w2288
37341 >= 25*xabs
25*xabs = 37341
B
w2289
37347 >= 25*xabs
25*xabs = 37347
C
w2290
37353 >= 25*xabs
25*xabs = 37353
B
w2291
37359 >= 25*xabs
25*xabs = 37359
C
w2292
7473 >= 5*xabs
5*xabs = 7473
B
w2293
37371 >= 25*xabs
25*xabs = 37371
C
w2294
37378 >= 25*xabs
25*xabs = 37378
B
w2295
37383 >= 25*xabs
25*xabs = 37383
C
w2296
7478 >= 5*xabs
5*xabs = 7478
B
w2297
37396 >= 25*xabs
25*xabs = 37396
C
w2298
37402 >= 25*xabs

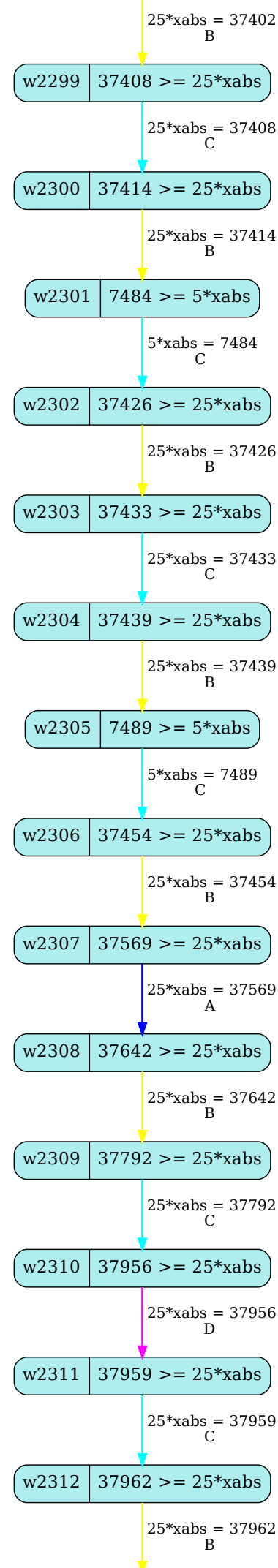
25*xabs = 37402
B
w2299
37408 >= 25*xabs
25*xabs = 37408
C
w2300
37414 >= 25*xabs
25*xabs = 37414
B
w2301
7484 >= 5*xabs
5*xabs = 7484
C
w2302
37426 >= 25*xabs
25*xabs = 37426
B
w2303
37433 >= 25*xabs
25*xabs = 37433
C
w2304
37439 >= 25*xabs
25*xabs = 37439
B
w2305
7489 >= 5*xabs
5*xabs = 7489
C
w2306
37454 >= 25*xabs
25*xabs = 37454
B
w2307
37569 >= 25*xabs
25*xabs = 37569
A
w2308
37642 >= 25*xabs
25*xabs = 37642
B
w2309
37792 >= 25*xabs
25*xabs = 37792
C
w2310
37956 >= 25*xabs
25*xabs = 37956
D
w2311
37959 >= 25*xabs
25*xabs = 37959
C
w2312
37962 >= 25*xabs
25*xabs = 37962
B

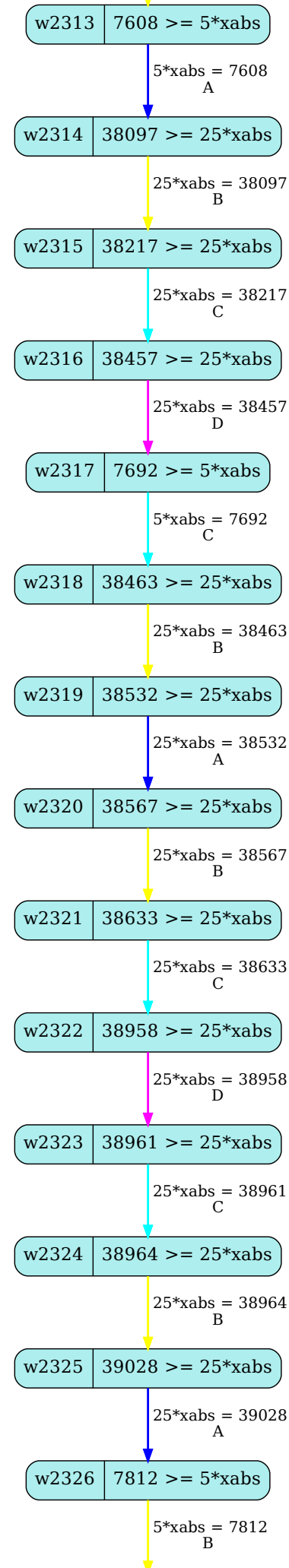
w2313
7608 >= 5*xabs
5*xabs = 7608
A
w2314
38097 >= 25*xabs
25*xabs = 38097
B
w2315
38217 >= 25*xabs
25*xabs = 38217
C
w2316
38457 >= 25*xabs
25*xabs = 38457
D
w2317
7692 >= 5*xabs
5*xabs = 7692
C
w2318
38463 >= 25*xabs
25*xabs = 38463
B
w2319
38532 >= 25*xabs
25*xabs = 38532
A
w2320
38567 >= 25*xabs
25*xabs = 38567
B
w2321
38633 >= 25*xabs
25*xabs = 38633
C
w2322
38958 >= 25*xabs
25*xabs = 38958
D
w2323
38961 >= 25*xabs
25*xabs = 38961
C
w2324
38964 >= 25*xabs
25*xabs = 38964
B
w2325
39028 >= 25*xabs
25*xabs = 39028
A
w2326
7812 >= 5*xabs
5*xabs = 7812
B

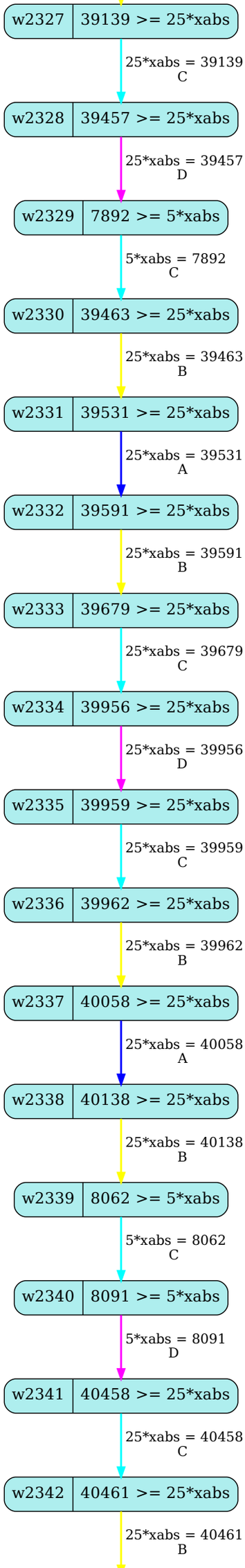
w2327
39139 >= 25*xabs
25*xabs = 39139
C
w2328
39457 >= 25*xabs
25*xabs = 39457
D
w2329
7892 >= 5*xabs
5*xabs = 7892
C
w2330
39463 >= 25*xabs
25*xabs = 39463
B
w2331
39531 >= 25*xabs
25*xabs = 39531
A
w2332
39591 >= 25*xabs
25*xabs = 39591
B
w2333
39679 >= 25*xabs
25*xabs = 39679
C
w2334
39956 >= 25*xabs
25*xabs = 39956
D
w2335
39959 >= 25*xabs
25*xabs = 39959
C
w2336
39962 >= 25*xabs
25*xabs = 39962
B
w2337
40058 >= 25*xabs
25*xabs = 40058
A
w2338
40138 >= 25*xabs
25*xabs = 40138
B
w2339
8062 >= 5*xabs
5*xabs = 8062
C
w2340
8091 >= 5*xabs
5*xabs = 8091
D
w2341
40458 >= 25*xabs
25*xabs = 40458
C
w2342
40461 >= 25*xabs
25*xabs = 40461
B

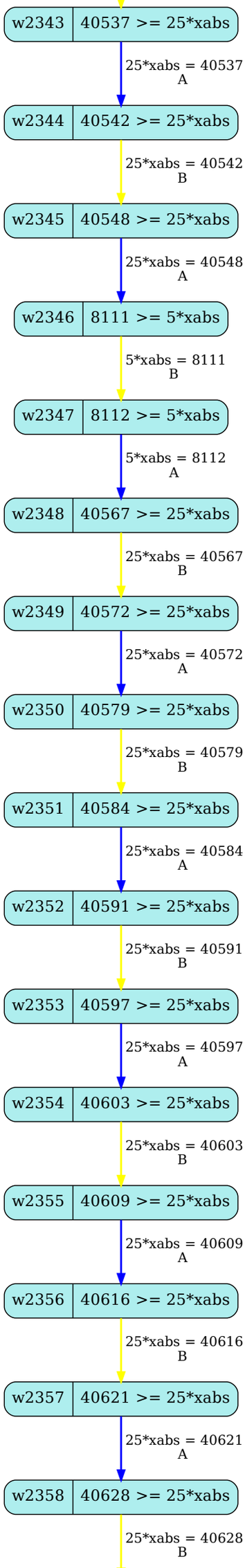
w2343
40537 >= 25*xabs
25*xabs = 40537
A
w2344
40542 >= 25*xabs
25*xabs = 40542
B
w2345
40548 >= 25*xabs
25*xabs = 40548
A
w2346
8111 >= 5*xabs
5*xabs = 8111
B
w2347
8112 >= 5*xabs
5*xabs = 8112
A
w2348
40567 >= 25*xabs
25*xabs = 40567
B
w2349
40572 >= 25*xabs
25*xabs = 40572
A
w2350
40579 >= 25*xabs
25*xabs = 40579
B
w2351
40584 >= 25*xabs
25*xabs = 40584
A
w2352
40591 >= 25*xabs
25*xabs = 40591
B
w2353
40597 >= 25*xabs
25*xabs = 40597
A
w2354
40603 >= 25*xabs
25*xabs = 40603
B
w2355
40609 >= 25*xabs
25*xabs = 40609
A
w2356
40616 >= 25*xabs
25*xabs = 40616
B
w2357
40621 >= 25*xabs
25*xabs = 40621
A
w2358
40628 >= 25*xabs
25*xabs = 40628
B

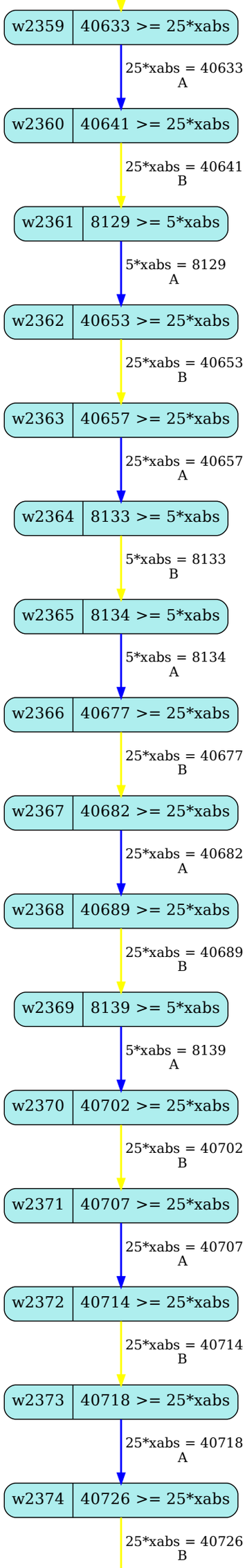
w2359
40633 >= 25*xabs
25*xabs = 40633
A
w2360
40641 >= 25*xabs
25*xabs = 40641
B
w2361
8129 >= 5*xabs
5*xabs = 8129
A
w2362
40653 >= 25*xabs
25*xabs = 40653
B
w2363
40657 >= 25*xabs
25*xabs = 40657
A
w2364
8133 >= 5*xabs
5*xabs = 8133
B
w2365
8134 >= 5*xabs
5*xabs = 8134
A
w2366
40677 >= 25*xabs
25*xabs = 40677
B
w2367
40682 >= 25*xabs
25*xabs = 40682
A
w2368
40689 >= 25*xabs
25*xabs = 40689
B
w2369
8139 >= 5*xabs
5*xabs = 8139
A
w2370
40702 >= 25*xabs
25*xabs = 40702
B
w2371
40707 >= 25*xabs
25*xabs = 40707
A
w2372
40714 >= 25*xabs
25*xabs = 40714
B
w2373
40718 >= 25*xabs
25*xabs = 40718
A
w2374
40726 >= 25*xabs
25*xabs = 40726
B

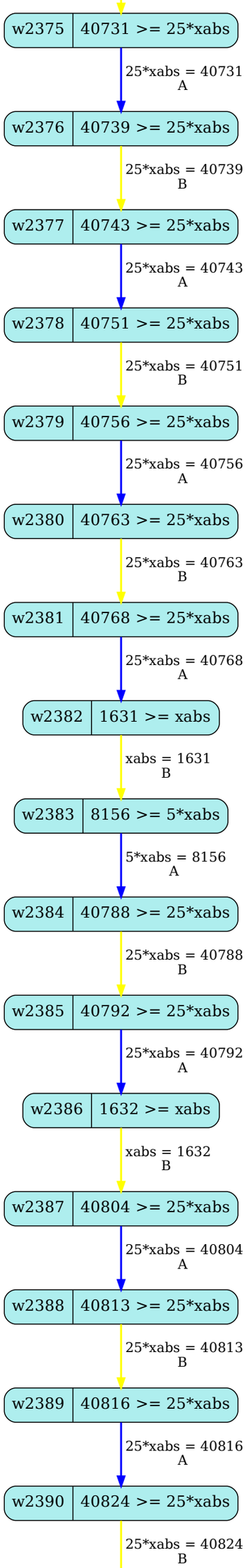
w2375
40731 >= 25*xabs
25*xabs = 40731
A
w2376
40739 >= 25*xabs
25*xabs = 40739
B
w2377
40743 >= 25*xabs
25*xabs = 40743
A
w2378
40751 >= 25*xabs
25*xabs = 40751
B
w2379
40756 >= 25*xabs
25*xabs = 40756
A
w2380
40763 >= 25*xabs
25*xabs = 40763
B
w2381
40768 >= 25*xabs
25*xabs = 40768
A
w2382
1631 >= xabs
xabs = 1631
B
w2383
8156 >= 5*xabs
5*xabs = 8156
A
w2384
40788 >= 25*xabs
25*xabs = 40788
B
w2385
40792 >= 25*xabs
25*xabs = 40792
A
w2386
1632 >= xabs
xabs = 1632
B
w2387
40804 >= 25*xabs
25*xabs = 40804
A
w2388
40813 >= 25*xabs
25*xabs = 40813
B
w2389
40816 >= 25*xabs
25*xabs = 40816
A
w2390
40824 >= 25*xabs
25*xabs = 40824
B

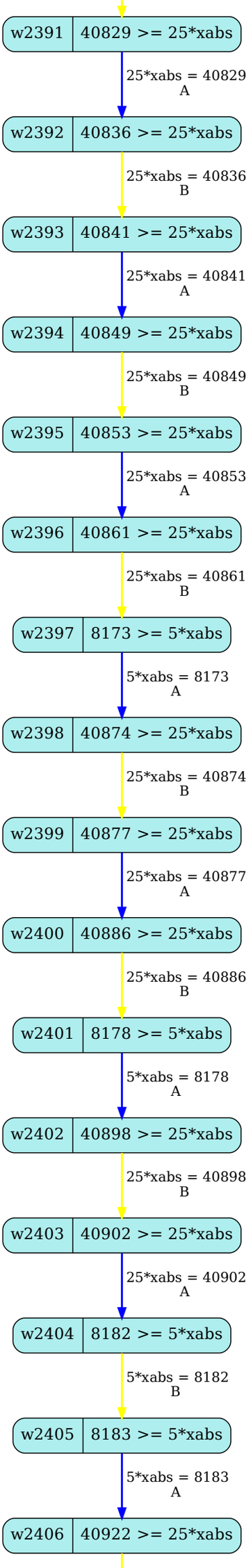
w2391
40829 >= 25*xabs
25*xabs = 40829
A
w2392
40836 >= 25*xabs
25*xabs = 40836
B
w2393
40841 >= 25*xabs
25*xabs = 40841
A
w2394
40849 >= 25*xabs
25*xabs = 40849
B
w2395
40853 >= 25*xabs
25*xabs = 40853
A
w2396
40861 >= 25*xabs
25*xabs = 40861
B
w2397
8173 >= 5*xabs
5*xabs = 8173
A
w2398
40874 >= 25*xabs
25*xabs = 40874
B
w2399
40877 >= 25*xabs
25*xabs = 40877
A
w2400
40886 >= 25*xabs
25*xabs = 40886
B
w2401
8178 >= 5*xabs
5*xabs = 8178
A
w2402
40898 >= 25*xabs
25*xabs = 40898
B
w2403
40902 >= 25*xabs
25*xabs = 40902
A
w2404
8182 >= 5*xabs
5*xabs = 8182
B
w2405
8183 >= 5*xabs
5*xabs = 8183
A
w2406
40922 >= 25*xabs

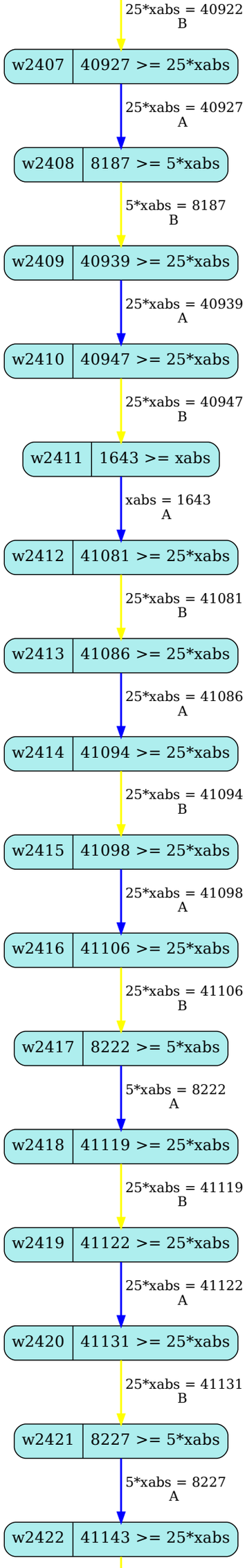
25*xabs = 40922
B
w2407
40927 >= 25*xabs
25*xabs = 40927
A
w2408
8187 >= 5*xabs
5*xabs = 8187
B
w2409
40939 >= 25*xabs
25*xabs = 40939
A
w2410
40947 >= 25*xabs
25*xabs = 40947
B
w2411
1643 >= xabs
xabs = 1643
A
w2412
41081 >= 25*xabs
25*xabs = 41081
B
w2413
41086 >= 25*xabs
25*xabs = 41086
A
w2414
41094 >= 25*xabs
25*xabs = 41094
B
w2415
41098 >= 25*xabs
25*xabs = 41098
A
w2416
41106 >= 25*xabs
25*xabs = 41106
B
w2417
8222 >= 5*xabs
5*xabs = 8222
A
w2418
41119 >= 25*xabs
25*xabs = 41119
B
w2419
41122 >= 25*xabs
25*xabs = 41122
A
w2420
41131 >= 25*xabs
25*xabs = 41131
B
w2421
8227 >= 5*xabs
5*xabs = 8227
A
w2422
41143 >= 25*xabs

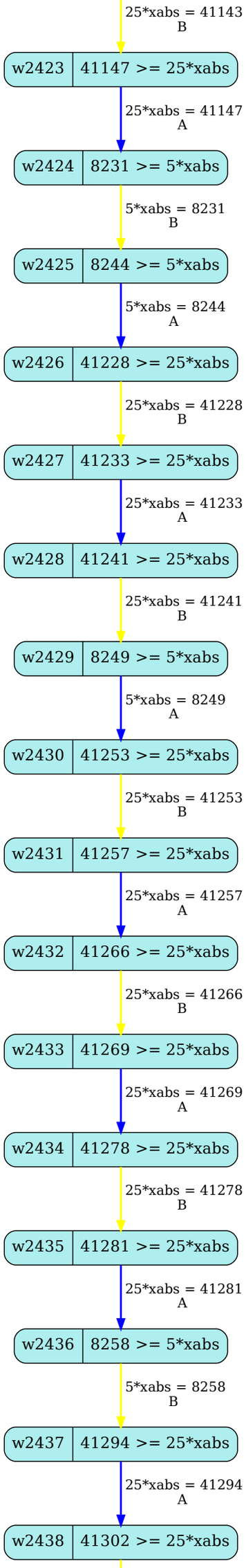
25*xabs = 41143
B
w2423
41147 >= 25*xabs
25*xabs = 41147
A
w2424
8231 >= 5*xabs
5*xabs = 8231
B
w2425
8244 >= 5*xabs
5*xabs = 8244
A
w2426
41228 >= 25*xabs
25*xabs = 41228
B
w2427
41233 >= 25*xabs
25*xabs = 41233
A
w2428
41241 >= 25*xabs
25*xabs = 41241
B
w2429
8249 >= 5*xabs
5*xabs = 8249
A
w2430
41253 >= 25*xabs
25*xabs = 41253
B
w2431
41257 >= 25*xabs
25*xabs = 41257
A
w2432
41266 >= 25*xabs
25*xabs = 41266
B
w2433
41269 >= 25*xabs
25*xabs = 41269
A
w2434
41278 >= 25*xabs
25*xabs = 41278
B
w2435
41281 >= 25*xabs
25*xabs = 41281
A
w2436
8258 >= 5*xabs
5*xabs = 8258
B
w2437
41294 >= 25*xabs
25*xabs = 41294
A
w2438
41302 >= 25*xabs

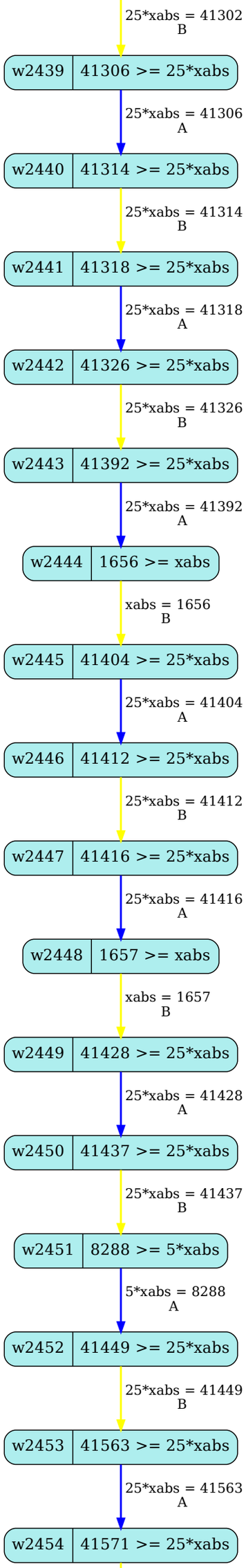
25*xabs = 41302
B
w2439
41306 >= 25*xabs
25*xabs = 41306
A
w2440
41314 >= 25*xabs
25*xabs = 41314
B
w2441
41318 >= 25*xabs
25*xabs = 41318
A
w2442
41326 >= 25*xabs
25*xabs = 41326
B
w2443
41392 >= 25*xabs
25*xabs = 41392
A
w2444
1656 >= xabs
xabs = 1656
B
w2445
41404 >= 25*xabs
25*xabs = 41404
A
w2446
41412 >= 25*xabs
25*xabs = 41412
B
w2447
41416 >= 25*xabs
25*xabs = 41416
A
w2448
1657 >= xabs
xabs = 1657
B
w2449
41428 >= 25*xabs
25*xabs = 41428
A
w2450
41437 >= 25*xabs
25*xabs = 41437
B
w2451
8288 >= 5*xabs
5*xabs = 8288
A
w2452
41449 >= 25*xabs
25*xabs = 41449
B
w2453
41563 >= 25*xabs
25*xabs = 41563
A
w2454
41571 >= 25*xabs

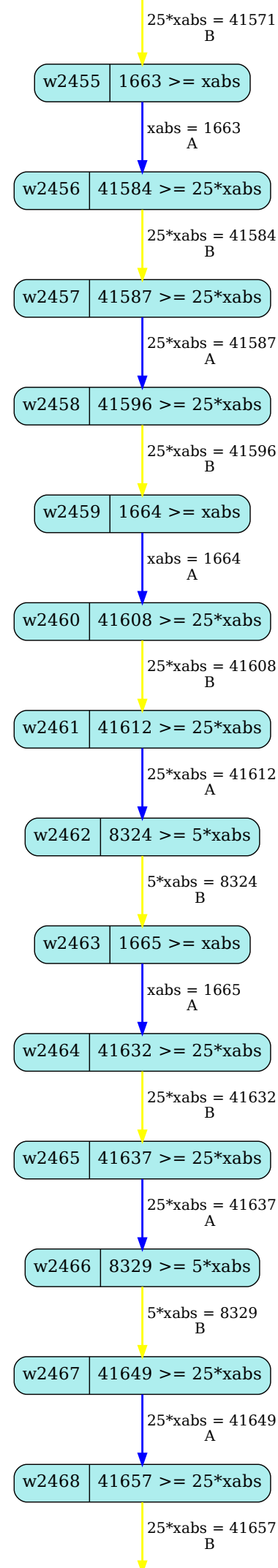
25*xabs = 41571
B
w2455
1663 >= xabs
xabs = 1663
A
w2456
41584 >= 25*xabs
25*xabs = 41584
B
w2457
41587 >= 25*xabs
25*xabs = 41587
A
w2458
41596 >= 25*xabs
25*xabs = 41596
B
w2459
1664 >= xabs
xabs = 1664
A
w2460
41608 >= 25*xabs
25*xabs = 41608
B
w2461
41612 >= 25*xabs
25*xabs = 41612
A
w2462
8324 >= 5*xabs
5*xabs = 8324
B
w2463
1665 >= xabs
xabs = 1665
A
w2464
41632 >= 25*xabs
25*xabs = 41632
B
w2465
41637 >= 25*xabs
25*xabs = 41637
A
w2466
8329 >= 5*xabs
5*xabs = 8329
B
w2467
41649 >= 25*xabs
25*xabs = 41649
A
w2468
41657 >= 25*xabs
25*xabs = 41657
B

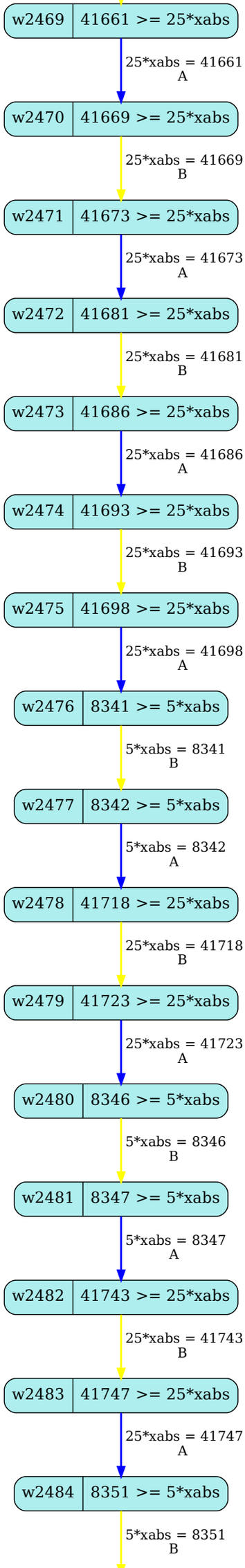
w2469
41661 >= 25*xabs
25*xabs = 41661
A
w2470
41669 >= 25*xabs
25*xabs = 41669
B
w2471
41673 >= 25*xabs
25*xabs = 41673
A
w2472
41681 >= 25*xabs
25*xabs = 41681
B
w2473
41686 >= 25*xabs
25*xabs = 41686
A
w2474
41693 >= 25*xabs
25*xabs = 41693
B
w2475
41698 >= 25*xabs
25*xabs = 41698
A
w2476
8341 >= 5*xabs
5*xabs = 8341
B
w2477
8342 >= 5*xabs
5*xabs = 8342
A
w2478
41718 >= 25*xabs
25*xabs = 41718
B
w2479
41723 >= 25*xabs
25*xabs = 41723
A
w2480
8346 >= 5*xabs
5*xabs = 8346
B
w2481
8347 >= 5*xabs
5*xabs = 8347
A
w2482
41743 >= 25*xabs
25*xabs = 41743
B
w2483
41747 >= 25*xabs
25*xabs = 41747
A
w2484
8351 >= 5*xabs
5*xabs = 8351
B

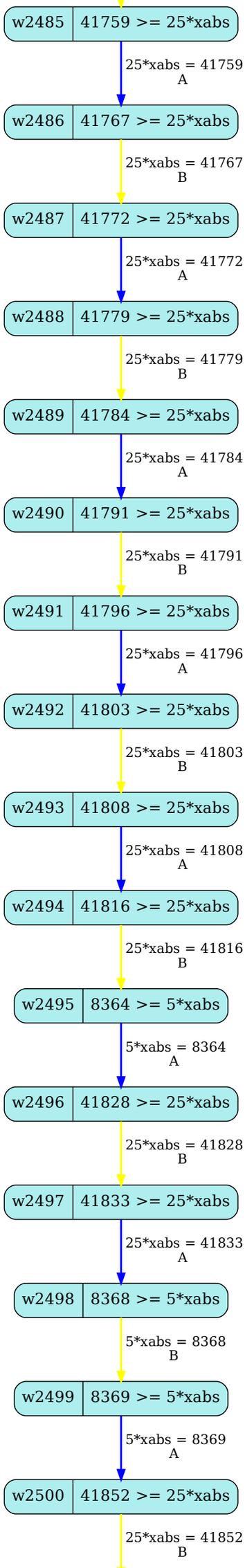
w2485
41759 >= 25*xabs
25*xabs = 41759
A
w2486
41767 >= 25*xabs
25*xabs = 41767
B
w2487
41772 >= 25*xabs
25*xabs = 41772
A
w2488
41779 >= 25*xabs
25*xabs = 41779
B
w2489
41784 >= 25*xabs
25*xabs = 41784
A
w2490
41791 >= 25*xabs
25*xabs = 41791
B
w2491
41796 >= 25*xabs
25*xabs = 41796
A
w2492
41803 >= 25*xabs
25*xabs = 41803
B
w2493
41808 >= 25*xabs
25*xabs = 41808
A
w2494
41816 >= 25*xabs
25*xabs = 41816
B
w2495
8364 >= 5*xabs
5*xabs = 8364
A
w2496
41828 >= 25*xabs
25*xabs = 41828
B
w2497
41833 >= 25*xabs
25*xabs = 41833
A
w2498
8368 >= 5*xabs
5*xabs = 8368
B
w2499
8369 >= 5*xabs
5*xabs = 8369
A
w2500
41852 >= 25*xabs
25*xabs = 41852
B

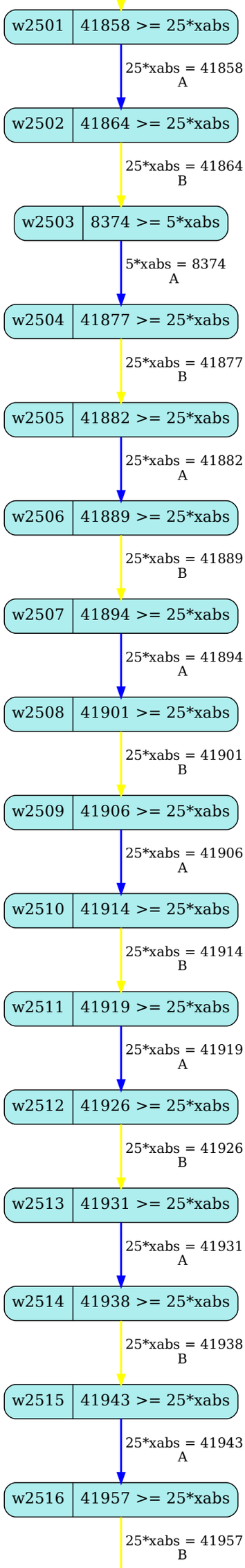
w2501
41858 >= 25*xabs
25*xabs = 41858
A
w2502
41864 >= 25*xabs
25*xabs = 41864
B
w2503
8374 >= 5*xabs
5*xabs = 8374
A
w2504
41877 >= 25*xabs
25*xabs = 41877
B
w2505
41882 >= 25*xabs
25*xabs = 41882
A
w2506
41889 >= 25*xabs
25*xabs = 41889
B
w2507
41894 >= 25*xabs
25*xabs = 41894
A
w2508
41901 >= 25*xabs
25*xabs = 41901
B
w2509
41906 >= 25*xabs
25*xabs = 41906
A
w2510
41914 >= 25*xabs
25*xabs = 41914
B
w2511
41919 >= 25*xabs
25*xabs = 41919
A
w2512
41926 >= 25*xabs
25*xabs = 41926
B
w2513
41931 >= 25*xabs
25*xabs = 41931
A
w2514
41938 >= 25*xabs
25*xabs = 41938
B
w2515
41943 >= 25*xabs
25*xabs = 41943
A
w2516
41957 >= 25*xabs
25*xabs = 41957
B

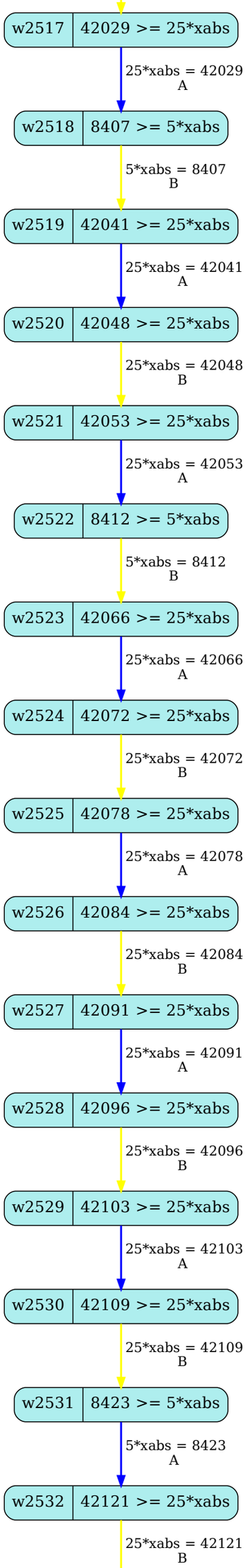
w2517
42029 >= 25*xabs
25*xabs = 42029
A
w2518
8407 >= 5*xabs
5*xabs = 8407
B
w2519
42041 >= 25*xabs
25*xabs = 42041
A
w2520
42048 >= 25*xabs
25*xabs = 42048
B
w2521
42053 >= 25*xabs
25*xabs = 42053
A
w2522
8412 >= 5*xabs
5*xabs = 8412
B
w2523
42066 >= 25*xabs
25*xabs = 42066
A
w2524
42072 >= 25*xabs
25*xabs = 42072
B
w2525
42078 >= 25*xabs
25*xabs = 42078
A
w2526
42084 >= 25*xabs
25*xabs = 42084
B
w2527
42091 >= 25*xabs
25*xabs = 42091
A
w2528
42096 >= 25*xabs
25*xabs = 42096
B
w2529
42103 >= 25*xabs
25*xabs = 42103
A
w2530
42109 >= 25*xabs
25*xabs = 42109
B
w2531
8423 >= 5*xabs
5*xabs = 8423
A
w2532
42121 >= 25*xabs
25*xabs = 42121
B

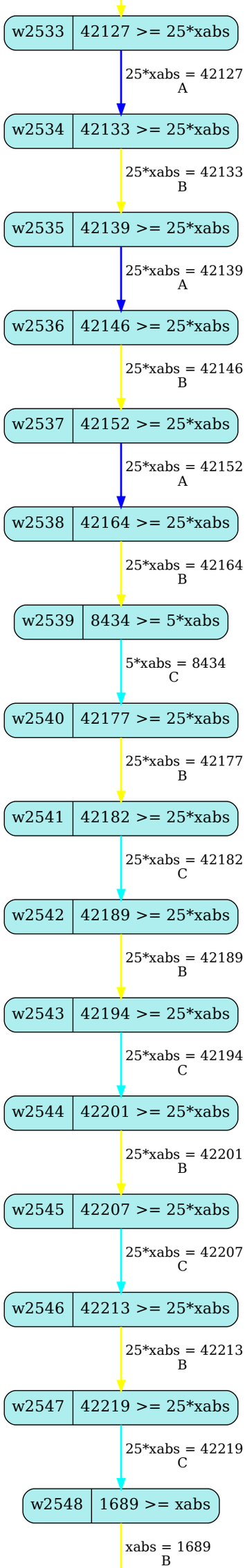
w2533
42127 >= 25*xabs
25*xabs = 42127
A
w2534
42133 >= 25*xabs
25*xabs = 42133
B
w2535
42139 >= 25*xabs
25*xabs = 42139
A
w2536
42146 >= 25*xabs
25*xabs = 42146
B
w2537
42152 >= 25*xabs
25*xabs = 42152
A
w2538
42164 >= 25*xabs
25*xabs = 42164
B
w2539
8434 >= 5*xabs
5*xabs = 8434
C
w2540
42177 >= 25*xabs
25*xabs = 42177
B
w2541
42182 >= 25*xabs
25*xabs = 42182
C
w2542
42189 >= 25*xabs
25*xabs = 42189
B
w2543
42194 >= 25*xabs
25*xabs = 42194
C
w2544
42201 >= 25*xabs
25*xabs = 42201
B
w2545
42207 >= 25*xabs
25*xabs = 42207
C
w2546
42213 >= 25*xabs
25*xabs = 42213
B
w2547
42219 >= 25*xabs
25*xabs = 42219
C
w2548
1689 >= xabs
xabs = 1689
B

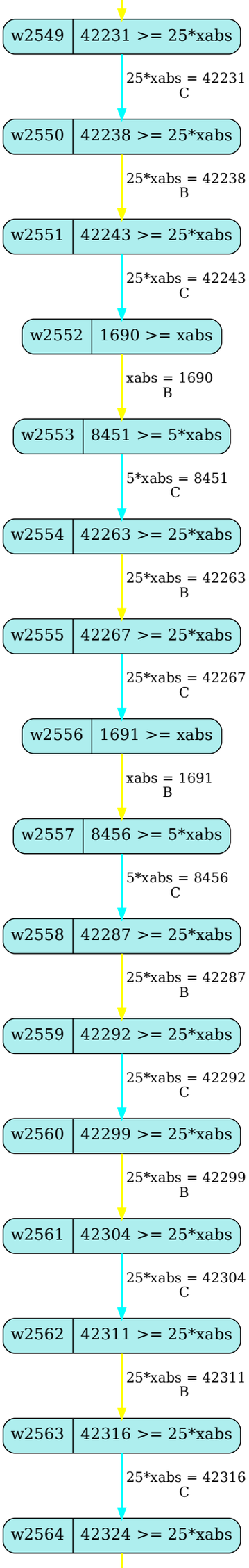
w2549
42231 >= 25*xabs
25*xabs = 42231
C
w2550
42238 >= 25*xabs
25*xabs = 42238
B
w2551
42243 >= 25*xabs
25*xabs = 42243
C
w2552
1690 >= xabs
xabs = 1690
B
w2553
8451 >= 5*xabs
5*xabs = 8451
C
w2554
42263 >= 25*xabs
25*xabs = 42263
B
w2555
42267 >= 25*xabs
25*xabs = 42267
C
w2556
1691 >= xabs
xabs = 1691
B
w2557
8456 >= 5*xabs
5*xabs = 8456
C
w2558
42287 >= 25*xabs
25*xabs = 42287
B
w2559
42292 >= 25*xabs
25*xabs = 42292
C
w2560
42299 >= 25*xabs
25*xabs = 42299
B
w2561
42304 >= 25*xabs
25*xabs = 42304
C
w2562
42311 >= 25*xabs
25*xabs = 42311
B
w2563
42316 >= 25*xabs
25*xabs = 42316
C
w2564
42324 >= 25*xabs

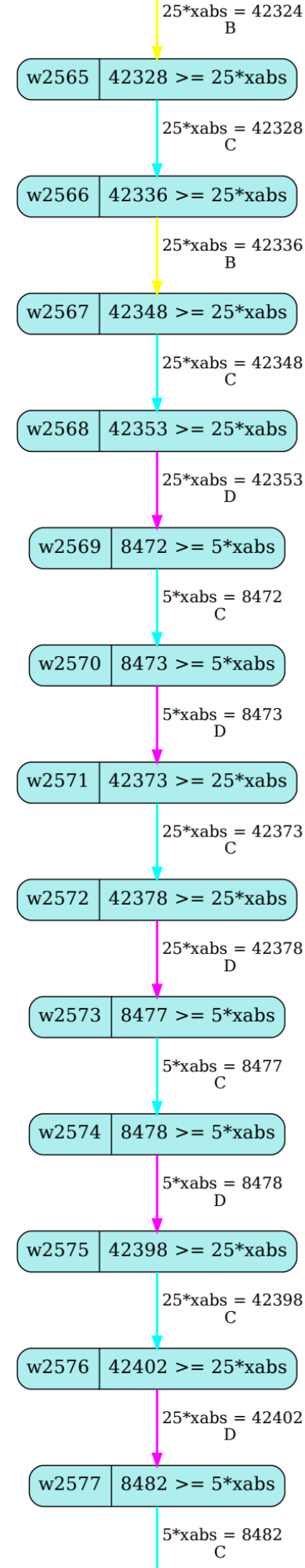
25*xabs = 42324
B
w2565
42328 >= 25*xabs
25*xabs = 42328
C
w2566
42336 >= 25*xabs
25*xabs = 42336
B
w2567
42348 >= 25*xabs
25*xabs = 42348
C
w2568
42353 >= 25*xabs
25*xabs = 42353
D
w2569
8472 >= 5*xabs
5*xabs = 8472
C
w2570
8473 >= 5*xabs
5*xabs = 8473
D
w2571
42373 >= 25*xabs
25*xabs = 42373
C
w2572
42378 >= 25*xabs
25*xabs = 42378
D
w2573
8477 >= 5*xabs
5*xabs = 8477
C
w2574
8478 >= 5*xabs
5*xabs = 8478
D
w2575
42398 >= 25*xabs
25*xabs = 42398
C
w2576
42402 >= 25*xabs
25*xabs = 42402
D
w2577
8482 >= 5*xabs
5*xabs = 8482
C

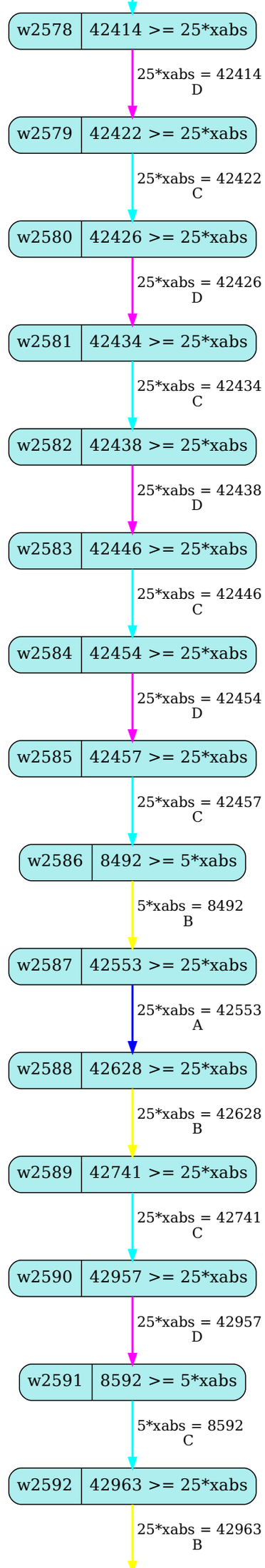
w2578
42414 >= 25*xabs
25*xabs = 42414
D
w2579
42422 >= 25*xabs
25*xabs = 42422
C
w2580
42426 >= 25*xabs
25*xabs = 42426
D
w2581
42434 >= 25*xabs
25*xabs = 42434
C
w2582
42438 >= 25*xabs
25*xabs = 42438
D
w2583
42446 >= 25*xabs
25*xabs = 42446
C
w2584
42454 >= 25*xabs
25*xabs = 42454
D
w2585
42457 >= 25*xabs
25*xabs = 42457
C
w2586
8492 >= 5*xabs
5*xabs = 8492
B
w2587
42553 >= 25*xabs
25*xabs = 42553
A
w2588
42628 >= 25*xabs
25*xabs = 42628
B
w2589
42741 >= 25*xabs
25*xabs = 42741
C
w2590
42957 >= 25*xabs
25*xabs = 42957
D
w2591
8592 >= 5*xabs
5*xabs = 8592
C
w2592
42963 >= 25*xabs
25*xabs = 42963
B

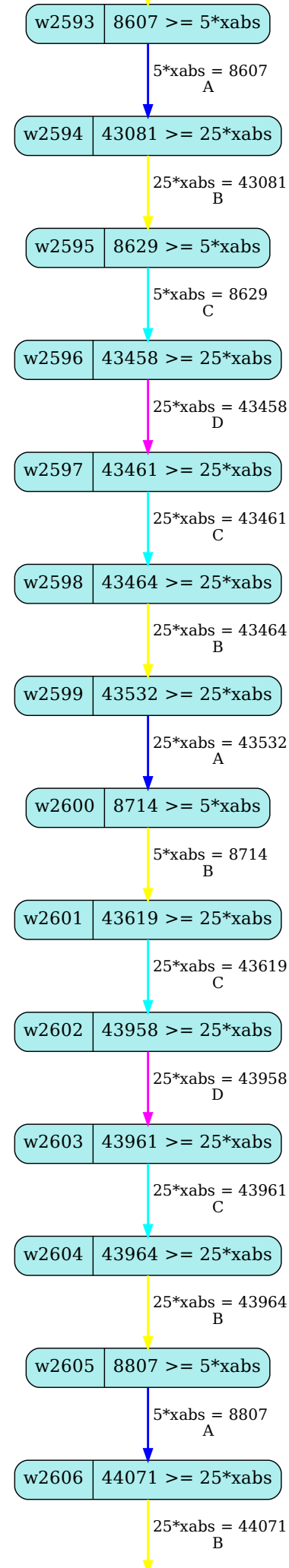
w2593
8607 >= 5*xabs
5*xabs = 8607
A
w2594
43081 >= 25*xabs
25*xabs = 43081
B
w2595
8629 >= 5*xabs
5*xabs = 8629
C
w2596
43458 >= 25*xabs
25*xabs = 43458
D
w2597
43461 >= 25*xabs
25*xabs = 43461
C
w2598
43464 >= 25*xabs
25*xabs = 43464
B
w2599
43532 >= 25*xabs
25*xabs = 43532
A
w2600
8714 >= 5*xabs
5*xabs = 8714
B
w2601
43619 >= 25*xabs
25*xabs = 43619
C
w2602
43958 >= 25*xabs
25*xabs = 43958
D
w2603
43961 >= 25*xabs
25*xabs = 43961
C
w2604
43964 >= 25*xabs
25*xabs = 43964
B
w2605
8807 >= 5*xabs
5*xabs = 8807
A
w2606
44071 >= 25*xabs
25*xabs = 44071
B

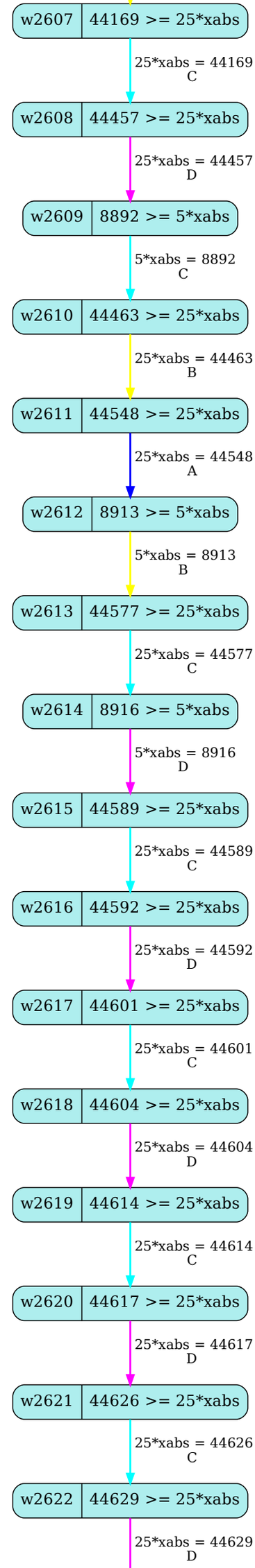
w2607
44169 >= 25*xabs
25*xabs = 44169
C
w2608
44457 >= 25*xabs
25*xabs = 44457
D
w2609
8892 >= 5*xabs
5*xabs = 8892
C
w2610
44463 >= 25*xabs
25*xabs = 44463
B
w2611
44548 >= 25*xabs
25*xabs = 44548
A
w2612
8913 >= 5*xabs
5*xabs = 8913
B
w2613
44577 >= 25*xabs
25*xabs = 44577
C
w2614
8916 >= 5*xabs
5*xabs = 8916
D
w2615
44589 >= 25*xabs
25*xabs = 44589
C
w2616
44592 >= 25*xabs
25*xabs = 44592
D
w2617
44601 >= 25*xabs
25*xabs = 44601
C
w2618
44604 >= 25*xabs
25*xabs = 44604
D
w2619
44614 >= 25*xabs
25*xabs = 44614
C
w2620
44617 >= 25*xabs
25*xabs = 44617
D
w2621
44626 >= 25*xabs
25*xabs = 44626
C
w2622
44629 >= 25*xabs
25*xabs = 44629
D

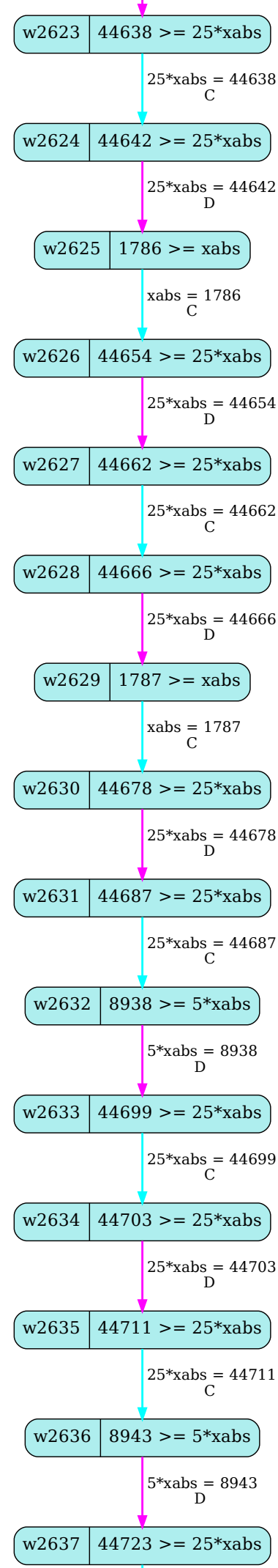
w2623
44638 >= 25*xabs
25*xabs = 44638
C
w2624
44642 >= 25*xabs
25*xabs = 44642
D
w2625
1786 >= xabs
xabs = 1786
C
w2626
44654 >= 25*xabs
25*xabs = 44654
D
w2627
44662 >= 25*xabs
25*xabs = 44662
C
w2628
44666 >= 25*xabs
25*xabs = 44666
D
w2629
1787 >= xabs
xabs = 1787
C
w2630
44678 >= 25*xabs
25*xabs = 44678
D
w2631
44687 >= 25*xabs
25*xabs = 44687
C
w2632
8938 >= 5*xabs
5*xabs = 8938
D
w2633
44699 >= 25*xabs
25*xabs = 44699
C
w2634
44703 >= 25*xabs
25*xabs = 44703
D
w2635
44711 >= 25*xabs
25*xabs = 44711
C
w2636
8943 >= 5*xabs
5*xabs = 8943
D
w2637
44723 >= 25*xabs

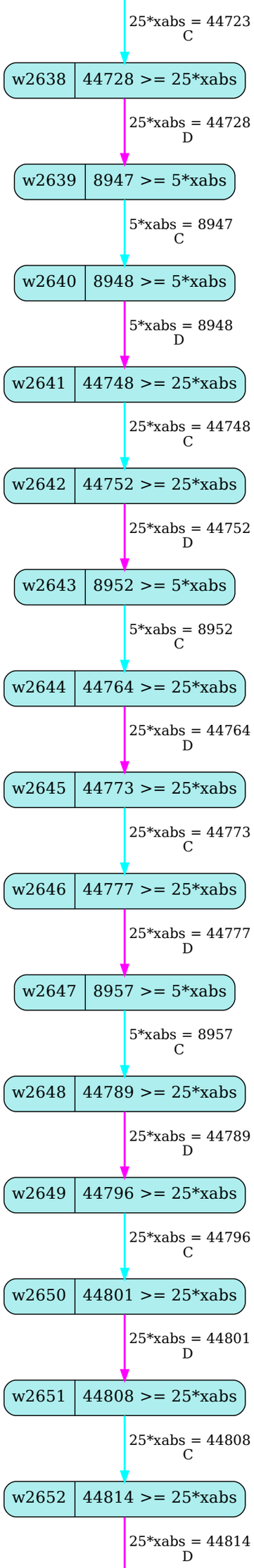
25*xabs = 44723
C
w2638
44728 >= 25*xabs
25*xabs = 44728
D
w2639
8947 >= 5*xabs
5*xabs = 8947
C
w2640
8948 >= 5*xabs
5*xabs = 8948
D
w2641
44748 >= 25*xabs
25*xabs = 44748
C
w2642
44752 >= 25*xabs
25*xabs = 44752
D
w2643
8952 >= 5*xabs
5*xabs = 8952
C
w2644
44764 >= 25*xabs
25*xabs = 44764
D
w2645
44773 >= 25*xabs
25*xabs = 44773
C
w2646
44777 >= 25*xabs
25*xabs = 44777
D
w2647
8957 >= 5*xabs
5*xabs = 8957
C
w2648
44789 >= 25*xabs
25*xabs = 44789
D
w2649
44796 >= 25*xabs
25*xabs = 44796
C
w2650
44801 >= 25*xabs
25*xabs = 44801
D
w2651
44808 >= 25*xabs
25*xabs = 44808
C
w2652
44814 >= 25*xabs
25*xabs = 44814
D

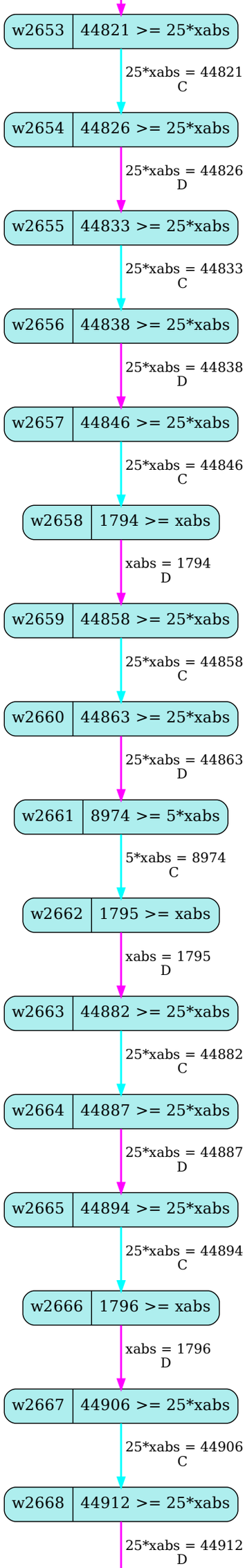
w2653
44821 >= 25*xabs
25*xabs = 44821
C
w2654
44826 >= 25*xabs
25*xabs = 44826
D
w2655
44833 >= 25*xabs
25*xabs = 44833
C
w2656
44838 >= 25*xabs
25*xabs = 44838
D
w2657
44846 >= 25*xabs
25*xabs = 44846
C
w2658
1794 >= xabs
xabs = 1794
D
w2659
44858 >= 25*xabs
25*xabs = 44858
C
w2660
44863 >= 25*xabs
25*xabs = 44863
D
w2661
8974 >= 5*xabs
5*xabs = 8974
C
w2662
1795 >= xabs
xabs = 1795
D
w2663
44882 >= 25*xabs
25*xabs = 44882
C
w2664
44887 >= 25*xabs
25*xabs = 44887
D
w2665
44894 >= 25*xabs
25*xabs = 44894
C
w2666
1796 >= xabs
xabs = 1796
D
w2667
44906 >= 25*xabs
25*xabs = 44906
C
w2668
44912 >= 25*xabs
25*xabs = 44912
D

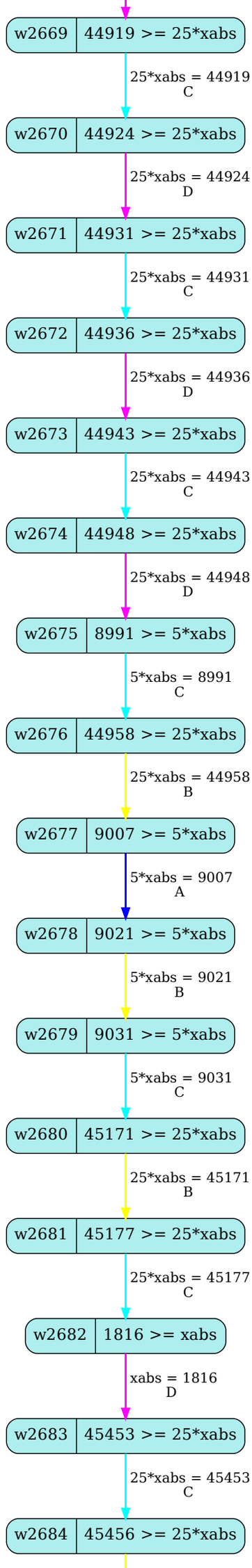
w2669
44919 >= 25*xabs
25*xabs = 44919
C
w2670
44924 >= 25*xabs
25*xabs = 44924
D
w2671
44931 >= 25*xabs
25*xabs = 44931
C
w2672
44936 >= 25*xabs
25*xabs = 44936
D
w2673
44943 >= 25*xabs
25*xabs = 44943
C
w2674
44948 >= 25*xabs
25*xabs = 44948
D
w2675
8991 >= 5*xabs
5*xabs = 8991
C
w2676
44958 >= 25*xabs
25*xabs = 44958
B
w2677
9007 >= 5*xabs
5*xabs = 9007
A
w2678
9021 >= 5*xabs
5*xabs = 9021
B
w2679
9031 >= 5*xabs
5*xabs = 9031
C
w2680
45171 >= 25*xabs
25*xabs = 45171
B
w2681
45177 >= 25*xabs
25*xabs = 45177
C
w2682
1816 >= xabs
xabs = 1816
D
w2683
45453 >= 25*xabs
25*xabs = 45453
C
w2684
45456 >= 25*xabs

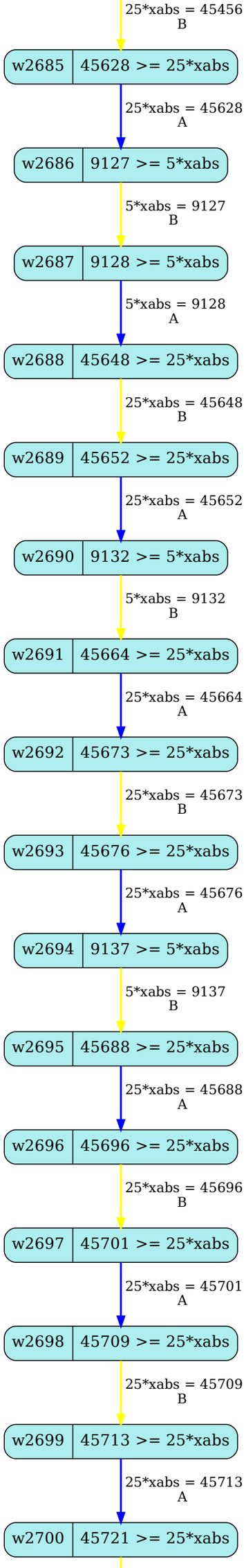
25*xabs = 45456
B
w2685
45628 >= 25*xabs
25*xabs = 45628
A
w2686
9127 >= 5*xabs
5*xabs = 9127
B
w2687
9128 >= 5*xabs
5*xabs = 9128
A
w2688
45648 >= 25*xabs
25*xabs = 45648
B
w2689
45652 >= 25*xabs
25*xabs = 45652
A
w2690
9132 >= 5*xabs
5*xabs = 9132
B
w2691
45664 >= 25*xabs
25*xabs = 45664
A
w2692
45673 >= 25*xabs
25*xabs = 45673
B
w2693
45676 >= 25*xabs
25*xabs = 45676
A
w2694
9137 >= 5*xabs
5*xabs = 9137
B
w2695
45688 >= 25*xabs
25*xabs = 45688
A
w2696
45696 >= 25*xabs
25*xabs = 45696
B
w2697
45701 >= 25*xabs
25*xabs = 45701
A
w2698
45709 >= 25*xabs
25*xabs = 45709
B
w2699
45713 >= 25*xabs
25*xabs = 45713
A
w2700
45721 >= 25*xabs

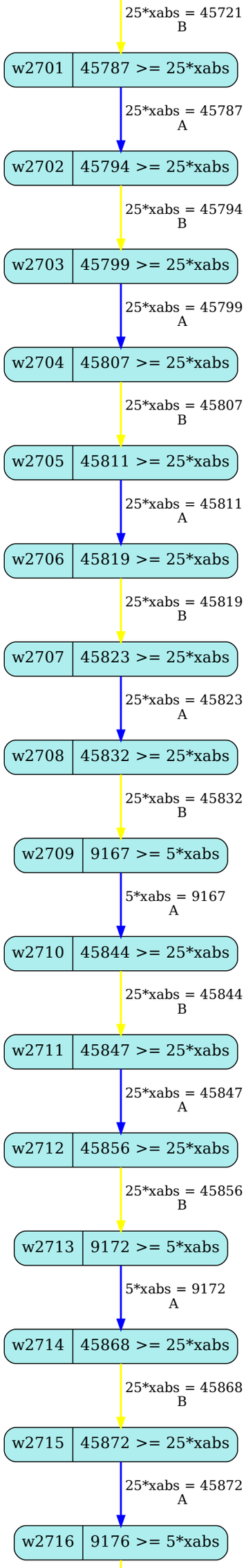
25*xabs = 45721
B
w2701
45787 >= 25*xabs
25*xabs = 45787
A
w2702
45794 >= 25*xabs
25*xabs = 45794
B
w2703
45799 >= 25*xabs
25*xabs = 45799
A
w2704
45807 >= 25*xabs
25*xabs = 45807
B
w2705
45811 >= 25*xabs
25*xabs = 45811
A
w2706
45819 >= 25*xabs
25*xabs = 45819
B
w2707
45823 >= 25*xabs
25*xabs = 45823
A
w2708
45832 >= 25*xabs
25*xabs = 45832
B
w2709
9167 >= 5*xabs
5*xabs = 9167
A
w2710
45844 >= 25*xabs
25*xabs = 45844
B
w2711
45847 >= 25*xabs
25*xabs = 45847
A
w2712
45856 >= 25*xabs
25*xabs = 45856
B
w2713
9172 >= 5*xabs
5*xabs = 9172
A
w2714
45868 >= 25*xabs
25*xabs = 45868
B
w2715
45872 >= 25*xabs
25*xabs = 45872
A
w2716
9176 >= 5*xabs

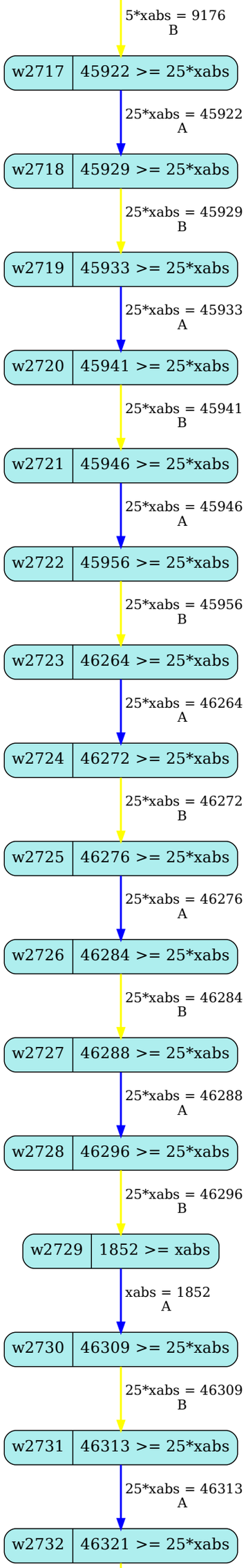
5*xabs = 9176
B
w2717
45922 >= 25*xabs
25*xabs = 45922
A
w2718
45929 >= 25*xabs
25*xabs = 45929
B
w2719
45933 >= 25*xabs
25*xabs = 45933
A
w2720
45941 >= 25*xabs
25*xabs = 45941
B
w2721
45946 >= 25*xabs
25*xabs = 45946
A
w2722
45956 >= 25*xabs
25*xabs = 45956
B
w2723
46264 >= 25*xabs
25*xabs = 46264
A
w2724
46272 >= 25*xabs
25*xabs = 46272
B
w2725
46276 >= 25*xabs
25*xabs = 46276
A
w2726
46284 >= 25*xabs
25*xabs = 46284
B
w2727
46288 >= 25*xabs
25*xabs = 46288
A
w2728
46296 >= 25*xabs
25*xabs = 46296
B
w2729
1852 >= xabs
xabs = 1852
A
w2730
46309 >= 25*xabs
25*xabs = 46309
B
w2731
46313 >= 25*xabs
25*xabs = 46313
A
w2732
46321 >= 25*xabs

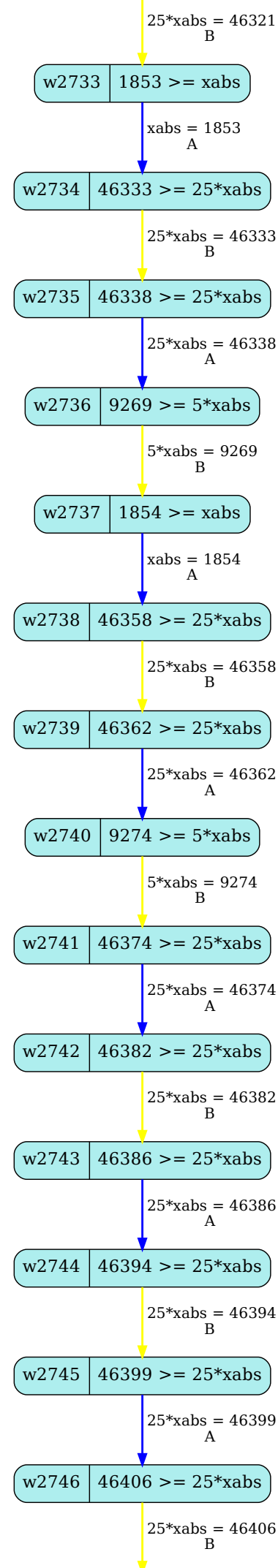
25*xabs = 46321
B
w2733
1853 >= xabs
xabs = 1853
A
w2734
46333 >= 25*xabs
25*xabs = 46333
B
w2735
46338 >= 25*xabs
25*xabs = 46338
A
w2736
9269 >= 5*xabs
5*xabs = 9269
B
w2737
1854 >= xabs
xabs = 1854
A
w2738
46358 >= 25*xabs
25*xabs = 46358
B
w2739
46362 >= 25*xabs
25*xabs = 46362
A
w2740
9274 >= 5*xabs
5*xabs = 9274
B
w2741
46374 >= 25*xabs
25*xabs = 46374
A
w2742
46382 >= 25*xabs
25*xabs = 46382
B
w2743
46386 >= 25*xabs
25*xabs = 46386
A
w2744
46394 >= 25*xabs
25*xabs = 46394
B
w2745
46399 >= 25*xabs
25*xabs = 46399
A
w2746
46406 >= 25*xabs
25*xabs = 46406
B

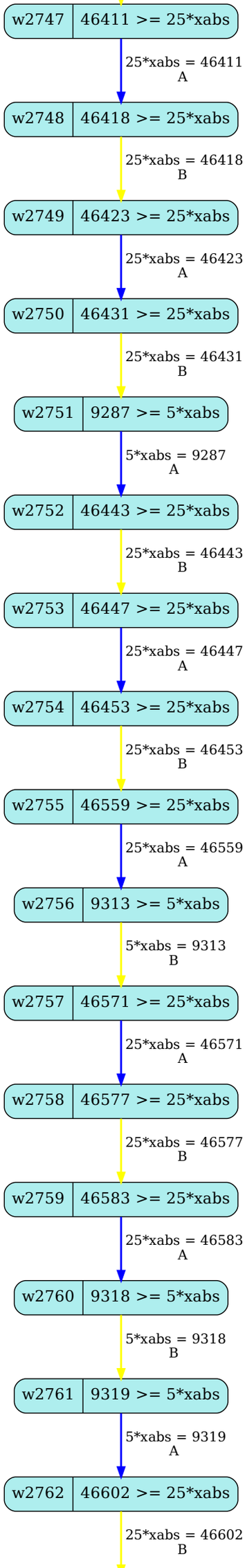
w2747
46411 >= 25*xabs
25*xabs = 46411
A
w2748
46418 >= 25*xabs
25*xabs = 46418
B
w2749
46423 >= 25*xabs
25*xabs = 46423
A
w2750
46431 >= 25*xabs
25*xabs = 46431
B
w2751
9287 >= 5*xabs
5*xabs = 9287
A
w2752
46443 >= 25*xabs
25*xabs = 46443
B
w2753
46447 >= 25*xabs
25*xabs = 46447
A
w2754
46453 >= 25*xabs
25*xabs = 46453
B
w2755
46559 >= 25*xabs
25*xabs = 46559
A
w2756
9313 >= 5*xabs
5*xabs = 9313
B
w2757
46571 >= 25*xabs
25*xabs = 46571
A
w2758
46577 >= 25*xabs
25*xabs = 46577
B
w2759
46583 >= 25*xabs
25*xabs = 46583
A
w2760
9318 >= 5*xabs
5*xabs = 9318
B
w2761
9319 >= 5*xabs
5*xabs = 9319
A
w2762
46602 >= 25*xabs
25*xabs = 46602
B

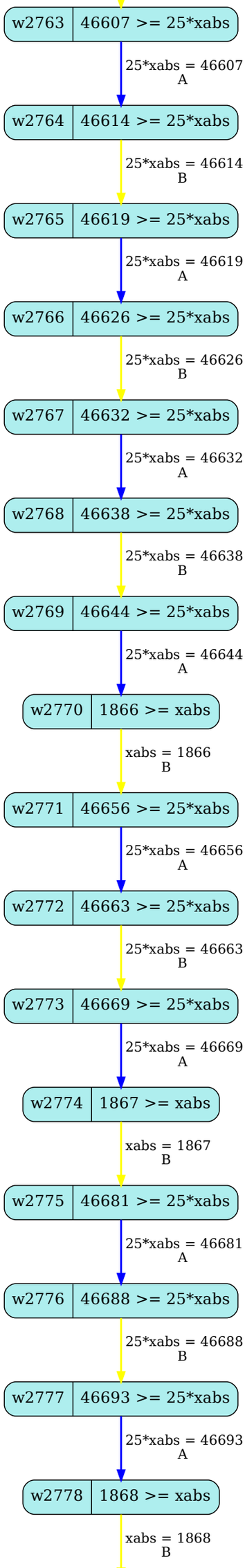
w2763
46607 >= 25*xabs
25*xabs = 46607
A
w2764
46614 >= 25*xabs
25*xabs = 46614
B
w2765
46619 >= 25*xabs
25*xabs = 46619
A
w2766
46626 >= 25*xabs
25*xabs = 46626
B
w2767
46632 >= 25*xabs
25*xabs = 46632
A
w2768
46638 >= 25*xabs
25*xabs = 46638
B
w2769
46644 >= 25*xabs
25*xabs = 46644
A
w2770
1866 >= xabs
xabs = 1866
B
w2771
46656 >= 25*xabs
25*xabs = 46656
A
w2772
46663 >= 25*xabs
25*xabs = 46663
B
w2773
46669 >= 25*xabs
25*xabs = 46669
A
w2774
1867 >= xabs
xabs = 1867
B
w2775
46681 >= 25*xabs
25*xabs = 46681
A
w2776
46688 >= 25*xabs
25*xabs = 46688
B
w2777
46693 >= 25*xabs
25*xabs = 46693
A
w2778
1868 >= xabs
xabs = 1868
B

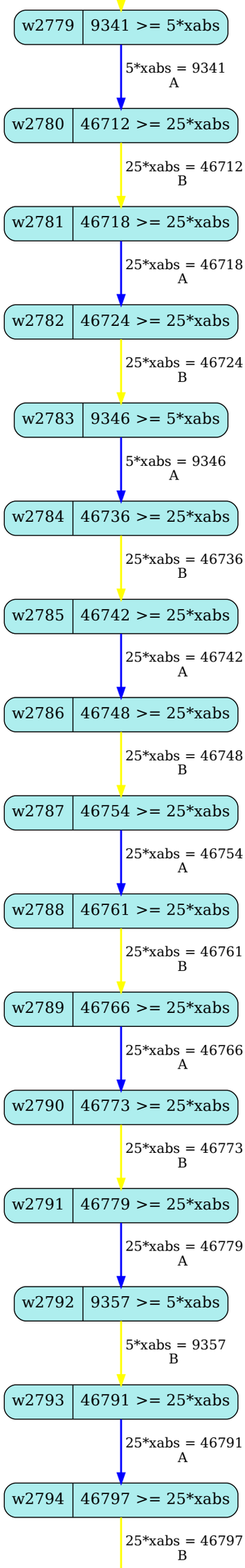
w2779
9341 >= 5*xabs
5*xabs = 9341
A
w2780
46712 >= 25*xabs
25*xabs = 46712
B
w2781
46718 >= 25*xabs
25*xabs = 46718
A
w2782
46724 >= 25*xabs
25*xabs = 46724
B
w2783
9346 >= 5*xabs
5*xabs = 9346
A
w2784
46736 >= 25*xabs
25*xabs = 46736
B
w2785
46742 >= 25*xabs
25*xabs = 46742
A
w2786
46748 >= 25*xabs
25*xabs = 46748
B
w2787
46754 >= 25*xabs
25*xabs = 46754
A
w2788
46761 >= 25*xabs
25*xabs = 46761
B
w2789
46766 >= 25*xabs
25*xabs = 46766
A
w2790
46773 >= 25*xabs
25*xabs = 46773
B
w2791
46779 >= 25*xabs
25*xabs = 46779
A
w2792
9357 >= 5*xabs
5*xabs = 9357
B
w2793
46791 >= 25*xabs
25*xabs = 46791
A
w2794
46797 >= 25*xabs
25*xabs = 46797
B

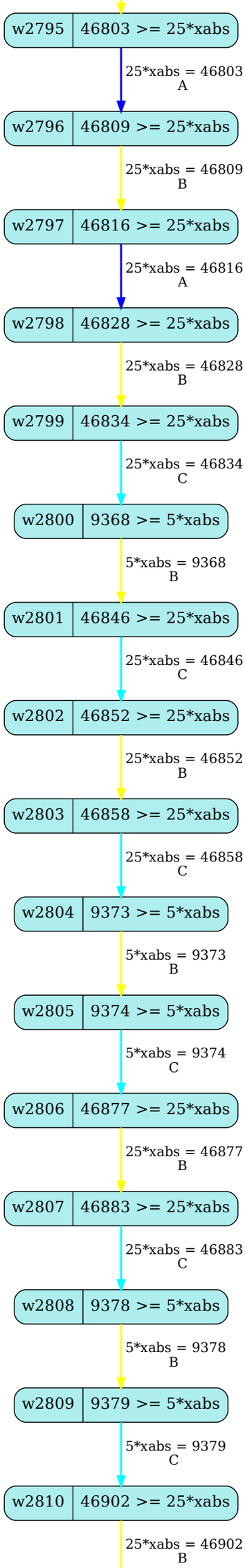
w2795
46803 >= 25*xabs
25*xabs = 46803
A
w2796
46809 >= 25*xabs
25*xabs = 46809
B
w2797
46816 >= 25*xabs
25*xabs = 46816
A
w2798
46828 >= 25*xabs
25*xabs = 46828
B
w2799
46834 >= 25*xabs
25*xabs = 46834
C
w2800
9368 >= 5*xabs
5*xabs = 9368
B
w2801
46846 >= 25*xabs
25*xabs = 46846
C
w2802
46852 >= 25*xabs
25*xabs = 46852
B
w2803
46858 >= 25*xabs
25*xabs = 46858
C
w2804
9373 >= 5*xabs
5*xabs = 9373
B
w2805
9374 >= 5*xabs
5*xabs = 9374
C
w2806
46877 >= 25*xabs
25*xabs = 46877
B
w2807
46883 >= 25*xabs
25*xabs = 46883
C
w2808
9378 >= 5*xabs
5*xabs = 9378
B
w2809
9379 >= 5*xabs
5*xabs = 9379
C
w2810
46902 >= 25*xabs
25*xabs = 46902
B

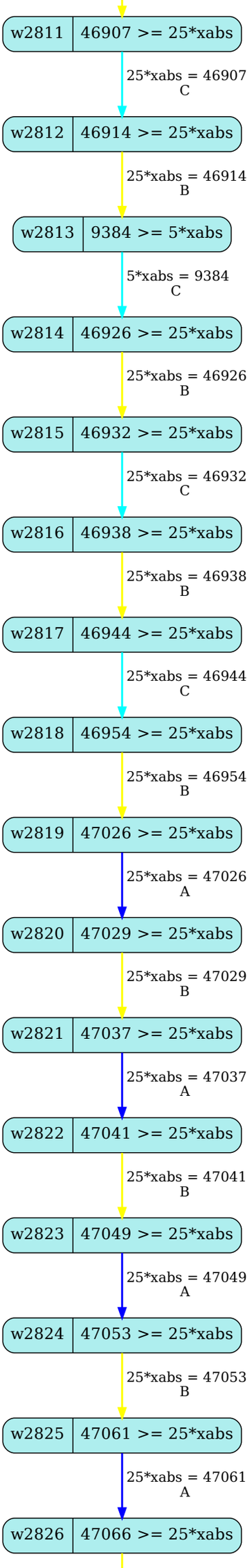
w2811
46907 >= 25*xabs
25*xabs = 46907
C
w2812
46914 >= 25*xabs
25*xabs = 46914
B
w2813
9384 >= 5*xabs
5*xabs = 9384
C
w2814
46926 >= 25*xabs
25*xabs = 46926
B
w2815
46932 >= 25*xabs
25*xabs = 46932
C
w2816
46938 >= 25*xabs
25*xabs = 46938
B
w2817
46944 >= 25*xabs
25*xabs = 46944
C
w2818
46954 >= 25*xabs
25*xabs = 46954
B
w2819
47026 >= 25*xabs
25*xabs = 47026
A
w2820
47029 >= 25*xabs
25*xabs = 47029
B
w2821
47037 >= 25*xabs
25*xabs = 47037
A
w2822
47041 >= 25*xabs
25*xabs = 47041
B
w2823
47049 >= 25*xabs
25*xabs = 47049
A
w2824
47053 >= 25*xabs
25*xabs = 47053
B
w2825
47061 >= 25*xabs
25*xabs = 47061
A
w2826
47066 >= 25*xabs

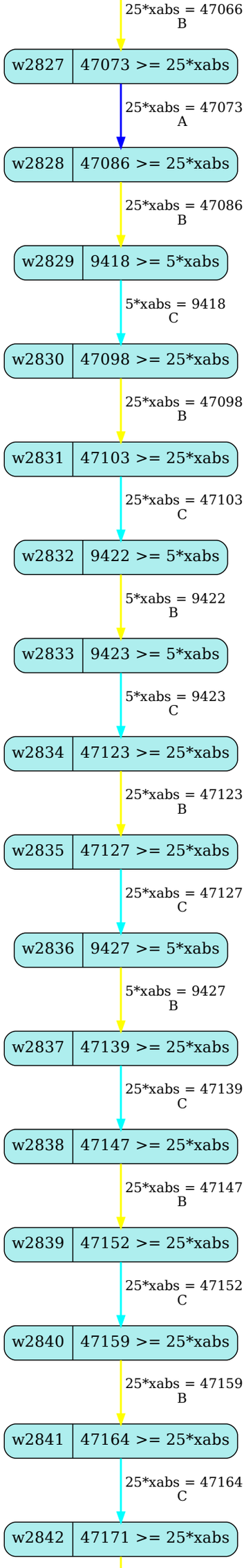
25*xabs = 47066
B
w2827
47073 >= 25*xabs
25*xabs = 47073
A
w2828
47086 >= 25*xabs
25*xabs = 47086
B
w2829
9418 >= 5*xabs
5*xabs = 9418
C
w2830
47098 >= 25*xabs
25*xabs = 47098
B
w2831
47103 >= 25*xabs
25*xabs = 47103
C
w2832
9422 >= 5*xabs
5*xabs = 9422
B
w2833
9423 >= 5*xabs
5*xabs = 9423
C
w2834
47123 >= 25*xabs
25*xabs = 47123
B
w2835
47127 >= 25*xabs
25*xabs = 47127
C
w2836
9427 >= 5*xabs
5*xabs = 9427
B
w2837
47139 >= 25*xabs
25*xabs = 47139
C
w2838
47147 >= 25*xabs
25*xabs = 47147
B
w2839
47152 >= 25*xabs
25*xabs = 47152
C
w2840
47159 >= 25*xabs
25*xabs = 47159
B
w2841
47164 >= 25*xabs
25*xabs = 47164
C
w2842
47171 >= 25*xabs

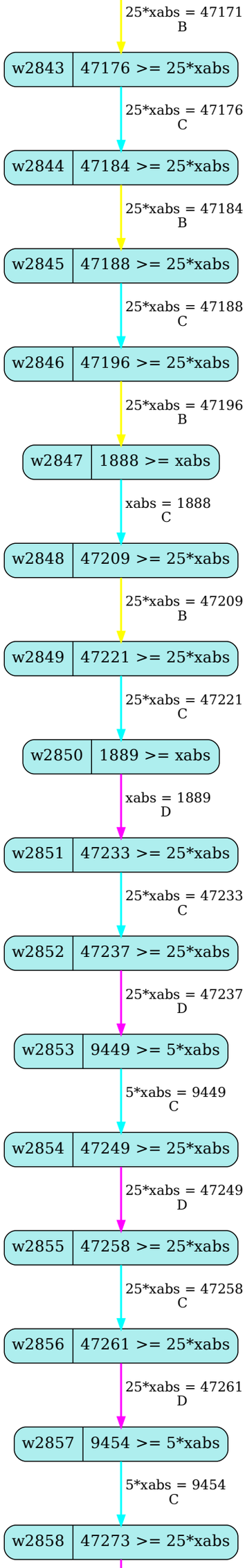
25*xabs = 47171
B
w2843
47176 >= 25*xabs
25*xabs = 47176
C
w2844
47184 >= 25*xabs
25*xabs = 47184
B
w2845
47188 >= 25*xabs
25*xabs = 47188
C
w2846
47196 >= 25*xabs
25*xabs = 47196
B
w2847
1888 >= xabs
xabs = 1888
C
w2848
47209 >= 25*xabs
25*xabs = 47209
B
w2849
47221 >= 25*xabs
25*xabs = 47221
C
w2850
1889 >= xabs
xabs = 1889
D
w2851
47233 >= 25*xabs
25*xabs = 47233
C
w2852
47237 >= 25*xabs
25*xabs = 47237
D
w2853
9449 >= 5*xabs
5*xabs = 9449
C
w2854
47249 >= 25*xabs
25*xabs = 47249
D
w2855
47258 >= 25*xabs
25*xabs = 47258
C
w2856
47261 >= 25*xabs
25*xabs = 47261
D
w2857
9454 >= 5*xabs
5*xabs = 9454
C
w2858
47273 >= 25*xabs

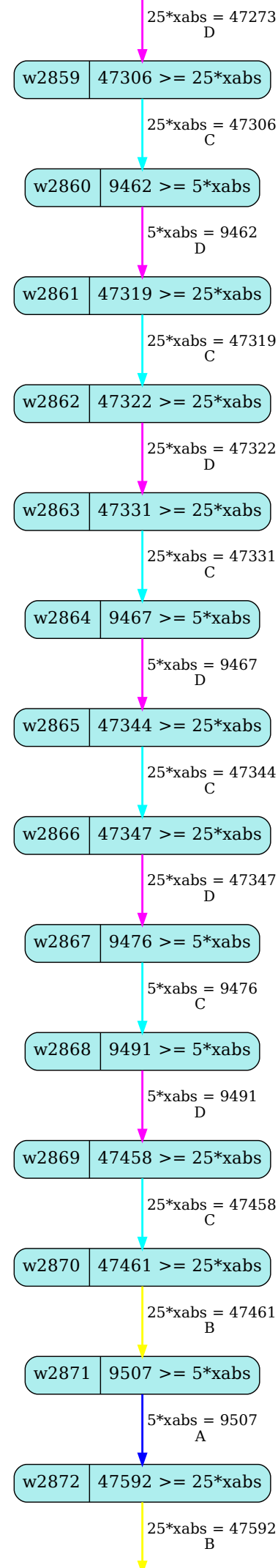
25*xabs = 47273
D
w2859
47306 >= 25*xabs
25*xabs = 47306
C
w2860
9462 >= 5*xabs
5*xabs = 9462
D
w2861
47319 >= 25*xabs
25*xabs = 47319
C
w2862
47322 >= 25*xabs
25*xabs = 47322
D
w2863
47331 >= 25*xabs
25*xabs = 47331
C
w2864
9467 >= 5*xabs
5*xabs = 9467
D
w2865
47344 >= 25*xabs
25*xabs = 47344
C
w2866
47347 >= 25*xabs
25*xabs = 47347
D
w2867
9476 >= 5*xabs
5*xabs = 9476
C
w2868
9491 >= 5*xabs
5*xabs = 9491
D
w2869
47458 >= 25*xabs
25*xabs = 47458
C
w2870
47461 >= 25*xabs
25*xabs = 47461
B
w2871
9507 >= 5*xabs
5*xabs = 9507
A
w2872
47592 >= 25*xabs
25*xabs = 47592
B

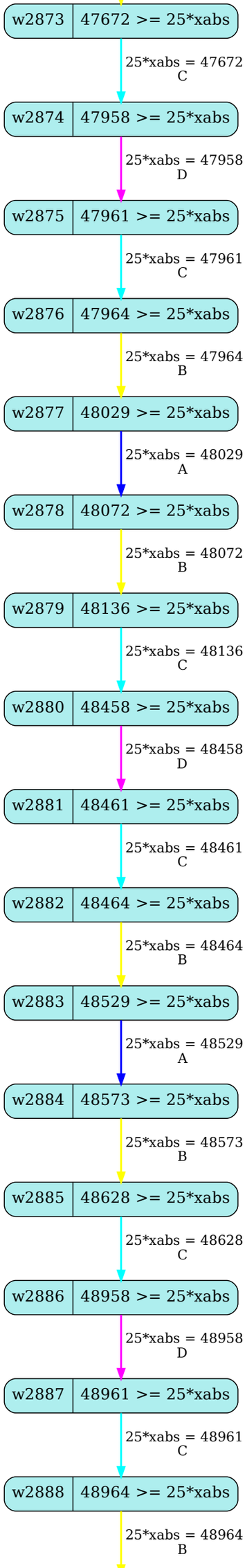
w2873
47672 >= 25*xabs
25*xabs = 47672
C
w2874
47958 >= 25*xabs
25*xabs = 47958
D
w2875
47961 >= 25*xabs
25*xabs = 47961
C
w2876
47964 >= 25*xabs
25*xabs = 47964
B
w2877
48029 >= 25*xabs
25*xabs = 48029
A
w2878
48072 >= 25*xabs
25*xabs = 48072
B
w2879
48136 >= 25*xabs
25*xabs = 48136
C
w2880
48458 >= 25*xabs
25*xabs = 48458
D
w2881
48461 >= 25*xabs
25*xabs = 48461
C
w2882
48464 >= 25*xabs
25*xabs = 48464
B
w2883
48529 >= 25*xabs
25*xabs = 48529
A
w2884
48573 >= 25*xabs
25*xabs = 48573
B
w2885
48628 >= 25*xabs
25*xabs = 48628
C
w2886
48958 >= 25*xabs
25*xabs = 48958
D
w2887
48961 >= 25*xabs
25*xabs = 48961
C
w2888
48964 >= 25*xabs
25*xabs = 48964
B

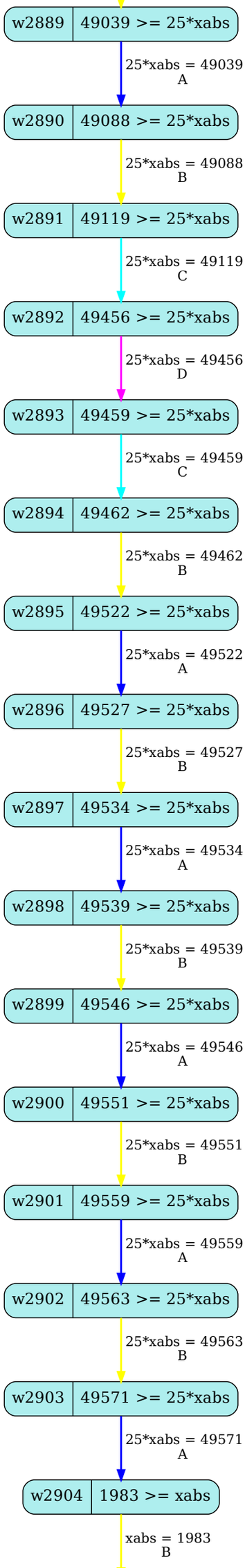
w2889
49039 >= 25*xabs
25*xabs = 49039
A
w2890
49088 >= 25*xabs
25*xabs = 49088
B
w2891
49119 >= 25*xabs
25*xabs = 49119
C
w2892
49456 >= 25*xabs
25*xabs = 49456
D
w2893
49459 >= 25*xabs
25*xabs = 49459
C
w2894
49462 >= 25*xabs
25*xabs = 49462
B
w2895
49522 >= 25*xabs
25*xabs = 49522
A
w2896
49527 >= 25*xabs
25*xabs = 49527
B
w2897
49534 >= 25*xabs
25*xabs = 49534
A
w2898
49539 >= 25*xabs
25*xabs = 49539
B
w2899
49546 >= 25*xabs
25*xabs = 49546
A
w2900
49551 >= 25*xabs
25*xabs = 49551
B
w2901
49559 >= 25*xabs
25*xabs = 49559
A
w2902
49563 >= 25*xabs
25*xabs = 49563
B
w2903
49571 >= 25*xabs
25*xabs = 49571
A
w2904
1983 >= xabs
xabs = 1983
B

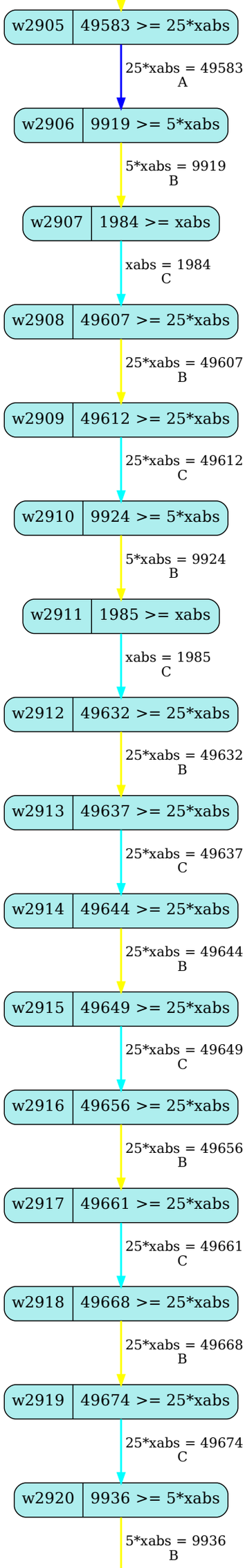
w2905
49583 >= 25*xabs
25*xabs = 49583
A
w2906
9919 >= 5*xabs
5*xabs = 9919
B
w2907
1984 >= xabs
xabs = 1984
C
w2908
49607 >= 25*xabs
25*xabs = 49607
B
w2909
49612 >= 25*xabs
25*xabs = 49612
C
w2910
9924 >= 5*xabs
5*xabs = 9924
B
w2911
1985 >= xabs
xabs = 1985
C
w2912
49632 >= 25*xabs
25*xabs = 49632
B
w2913
49637 >= 25*xabs
25*xabs = 49637
C
w2914
49644 >= 25*xabs
25*xabs = 49644
B
w2915
49649 >= 25*xabs
25*xabs = 49649
C
w2916
49656 >= 25*xabs
25*xabs = 49656
B
w2917
49661 >= 25*xabs
25*xabs = 49661
C
w2918
49668 >= 25*xabs
25*xabs = 49668
B
w2919
49674 >= 25*xabs
25*xabs = 49674
C
w2920
9936 >= 5*xabs
5*xabs = 9936
B

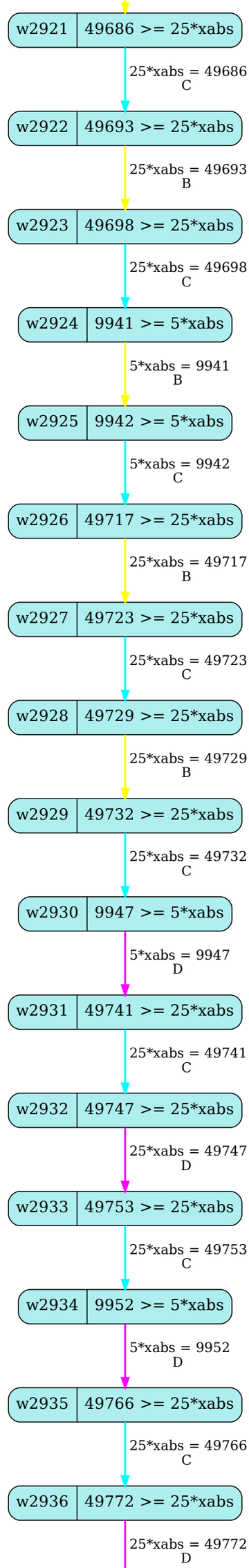
w2921
49686 >= 25*xabs
25*xabs = 49686
C
w2922
49693 >= 25*xabs
25*xabs = 49693
B
w2923
49698 >= 25*xabs
25*xabs = 49698
C
w2924
9941 >= 5*xabs
5*xabs = 9941
B
w2925
9942 >= 5*xabs
5*xabs = 9942
C
w2926
49717 >= 25*xabs
25*xabs = 49717
B
w2927
49723 >= 25*xabs
25*xabs = 49723
C
w2928
49729 >= 25*xabs
25*xabs = 49729
B
w2929
49732 >= 25*xabs
25*xabs = 49732
C
w2930
9947 >= 5*xabs
5*xabs = 9947
D
w2931
49741 >= 25*xabs
25*xabs = 49741
C
w2932
49747 >= 25*xabs
25*xabs = 49747
D
w2933
49753 >= 25*xabs
25*xabs = 49753
C
w2934
9952 >= 5*xabs
5*xabs = 9952
D
w2935
49766 >= 25*xabs
25*xabs = 49766
C
w2936
49772 >= 25*xabs
25*xabs = 49772
D

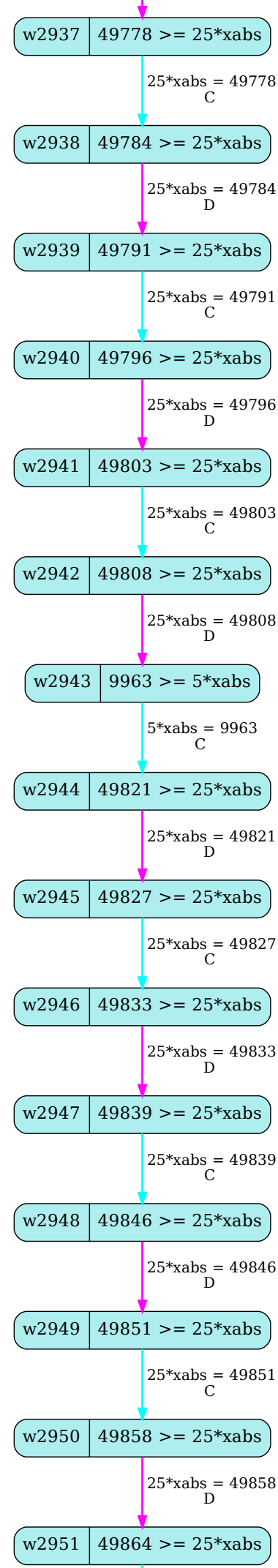
w2937
49778 >= 25*xabs
25*xabs = 49778
C
w2938
49784 >= 25*xabs
25*xabs = 49784
D
w2939
49791 >= 25*xabs
25*xabs = 49791
C
w2940
49796 >= 25*xabs
25*xabs = 49796
D
w2941
49803 >= 25*xabs
25*xabs = 49803
C
w2942
49808 >= 25*xabs
25*xabs = 49808
D
w2943
9963 >= 5*xabs
5*xabs = 9963
C
w2944
49821 >= 25*xabs
25*xabs = 49821
D
w2945
49827 >= 25*xabs
25*xabs = 49827
C
w2946
49833 >= 25*xabs
25*xabs = 49833
D
w2947
49839 >= 25*xabs
25*xabs = 49839
C
w2948
49846 >= 25*xabs
25*xabs = 49846
D
w2949
49851 >= 25*xabs
25*xabs = 49851
C
w2950
49858 >= 25*xabs
25*xabs = 49858
D
w2951
49864 >= 25*xabs

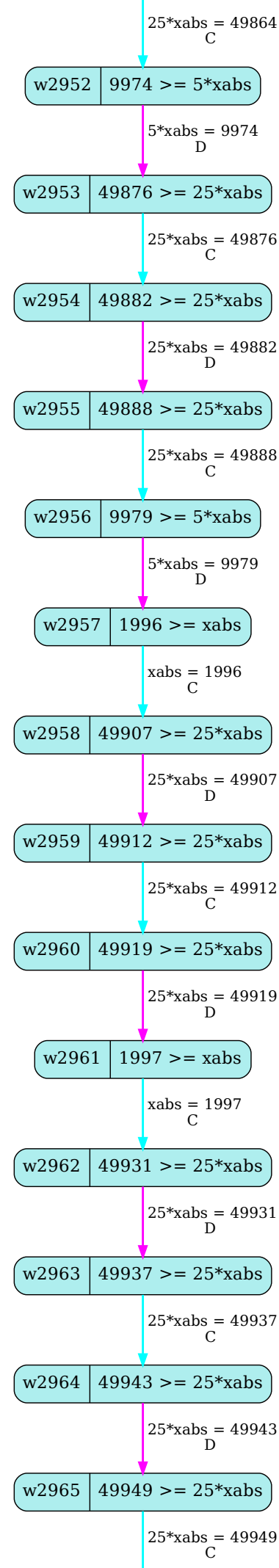
25*xabs = 49864
C
w2952
9974 >= 5*xabs
5*xabs = 9974
D
w2953
49876 >= 25*xabs
25*xabs = 49876
C
w2954
49882 >= 25*xabs
25*xabs = 49882
D
w2955
49888 >= 25*xabs
25*xabs = 49888
C
w2956
9979 >= 5*xabs
5*xabs = 9979
D
w2957
1996 >= xabs
xabs = 1996
C
w2958
49907 >= 25*xabs
25*xabs = 49907
D
w2959
49912 >= 25*xabs
25*xabs = 49912
C
w2960
49919 >= 25*xabs
25*xabs = 49919
D
w2961
1997 >= xabs
xabs = 1997
C
w2962
49931 >= 25*xabs
25*xabs = 49931
D
w2963
49937 >= 25*xabs
25*xabs = 49937
C
w2964
49943 >= 25*xabs
25*xabs = 49943
D
w2965
49949 >= 25*xabs
25*xabs = 49949
C

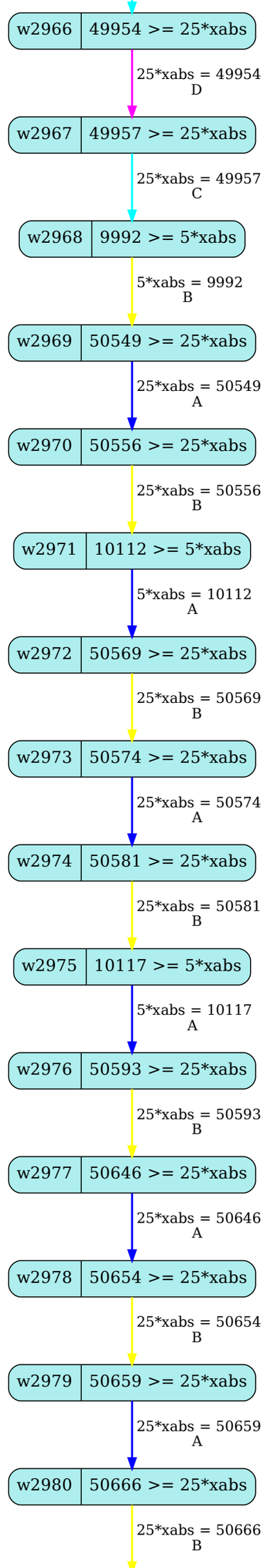
w2966
49954 >= 25*xabs
25*xabs = 49954
D
w2967
49957 >= 25*xabs
25*xabs = 49957
C
w2968
9992 >= 5*xabs
5*xabs = 9992
B
w2969
50549 >= 25*xabs
25*xabs = 50549
A
w2970
50556 >= 25*xabs
25*xabs = 50556
B
w2971
10112 >= 5*xabs
5*xabs = 10112
A
w2972
50569 >= 25*xabs
25*xabs = 50569
B
w2973
50574 >= 25*xabs
25*xabs = 50574
A
w2974
50581 >= 25*xabs
25*xabs = 50581
B
w2975
10117 >= 5*xabs
5*xabs = 10117
A
w2976
50593 >= 25*xabs
25*xabs = 50593
B
w2977
50646 >= 25*xabs
25*xabs = 50646
A
w2978
50654 >= 25*xabs
25*xabs = 50654
B
w2979
50659 >= 25*xabs
25*xabs = 50659
A
w2980
50666 >= 25*xabs
25*xabs = 50666
B

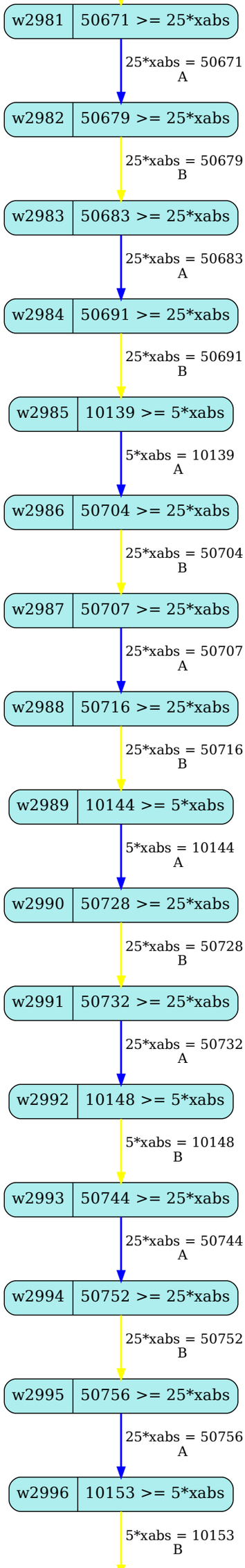
w2981
50671 >= 25*xabs
25*xabs = 50671
A
w2982
50679 >= 25*xabs
25*xabs = 50679
B
w2983
50683 >= 25*xabs
25*xabs = 50683
A
w2984
50691 >= 25*xabs
25*xabs = 50691
B
w2985
10139 >= 5*xabs
5*xabs = 10139
A
w2986
50704 >= 25*xabs
25*xabs = 50704
B
w2987
50707 >= 25*xabs
25*xabs = 50707
A
w2988
50716 >= 25*xabs
25*xabs = 50716
B
w2989
10144 >= 5*xabs
5*xabs = 10144
A
w2990
50728 >= 25*xabs
25*xabs = 50728
B
w2991
50732 >= 25*xabs
25*xabs = 50732
A
w2992
10148 >= 5*xabs
5*xabs = 10148
B
w2993
50744 >= 25*xabs
25*xabs = 50744
A
w2994
50752 >= 25*xabs
25*xabs = 50752
B
w2995
50756 >= 25*xabs
25*xabs = 50756
A
w2996
10153 >= 5*xabs
5*xabs = 10153
B

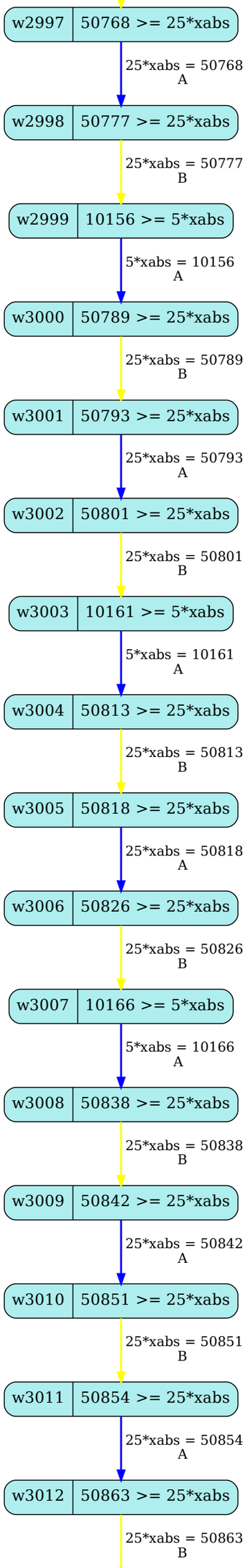
w2997
50768 >= 25*xabs
25*xabs = 50768
A
w2998
50777 >= 25*xabs
25*xabs = 50777
B
w2999
10156 >= 5*xabs
5*xabs = 10156
A
w3000
50789 >= 25*xabs
25*xabs = 50789
B
w3001
50793 >= 25*xabs
25*xabs = 50793
A
w3002
50801 >= 25*xabs
25*xabs = 50801
B
w3003
10161 >= 5*xabs
5*xabs = 10161
A
w3004
50813 >= 25*xabs
25*xabs = 50813
B
w3005
50818 >= 25*xabs
25*xabs = 50818
A
w3006
50826 >= 25*xabs
25*xabs = 50826
B
w3007
10166 >= 5*xabs
5*xabs = 10166
A
w3008
50838 >= 25*xabs
25*xabs = 50838
B
w3009
50842 >= 25*xabs
25*xabs = 50842
A
w3010
50851 >= 25*xabs
25*xabs = 50851
B
w3011
50854 >= 25*xabs
25*xabs = 50854
A
w3012
50863 >= 25*xabs
25*xabs = 50863
B

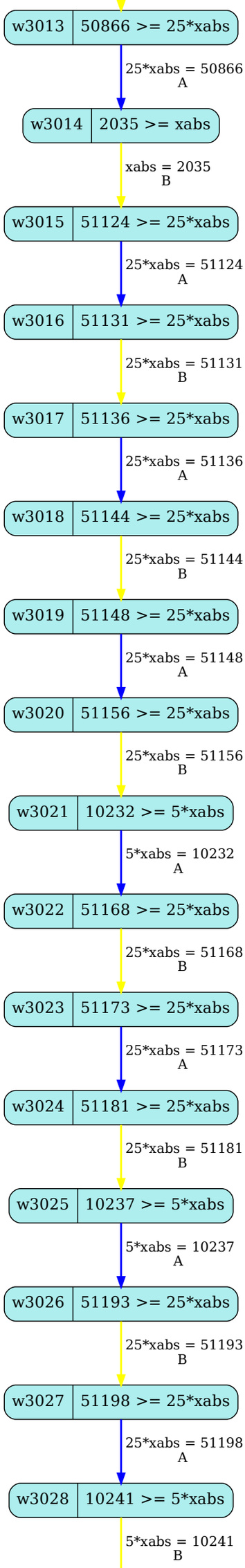
w3013
50866 >= 25*xabs
25*xabs = 50866
A
w3014
2035 >= xabs
xabs = 2035
B
w3015
51124 >= 25*xabs
25*xabs = 51124
A
w3016
51131 >= 25*xabs
25*xabs = 51131
B
w3017
51136 >= 25*xabs
25*xabs = 51136
A
w3018
51144 >= 25*xabs
25*xabs = 51144
B
w3019
51148 >= 25*xabs
25*xabs = 51148
A
w3020
51156 >= 25*xabs
25*xabs = 51156
B
w3021
10232 >= 5*xabs
5*xabs = 10232
A
w3022
51168 >= 25*xabs
25*xabs = 51168
B
w3023
51173 >= 25*xabs
25*xabs = 51173
A
w3024
51181 >= 25*xabs
25*xabs = 51181
B
w3025
10237 >= 5*xabs
5*xabs = 10237
A
w3026
51193 >= 25*xabs
25*xabs = 51193
B
w3027
51198 >= 25*xabs
25*xabs = 51198
A
w3028
10241 >= 5*xabs
5*xabs = 10241
B

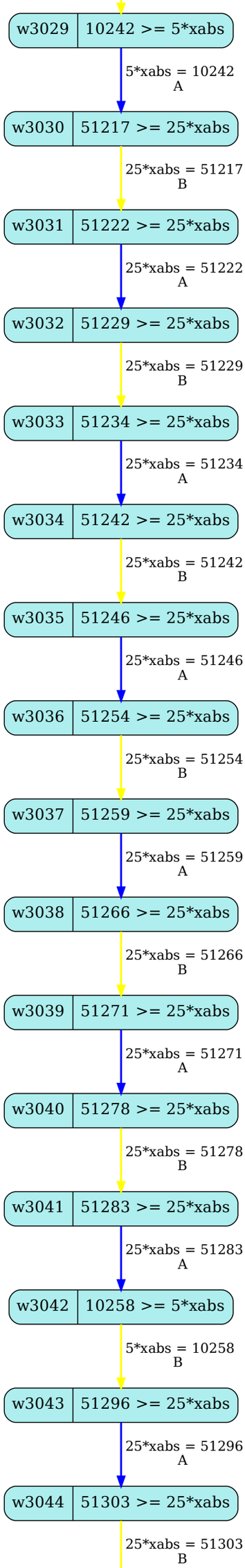
w3029
10242 >= 5*xabs
5*xabs = 10242
A
w3030
51217 >= 25*xabs
25*xabs = 51217
B
w3031
51222 >= 25*xabs
25*xabs = 51222
A
w3032
51229 >= 25*xabs
25*xabs = 51229
B
w3033
51234 >= 25*xabs
25*xabs = 51234
A
w3034
51242 >= 25*xabs
25*xabs = 51242
B
w3035
51246 >= 25*xabs
25*xabs = 51246
A
w3036
51254 >= 25*xabs
25*xabs = 51254
B
w3037
51259 >= 25*xabs
25*xabs = 51259
A
w3038
51266 >= 25*xabs
25*xabs = 51266
B
w3039
51271 >= 25*xabs
25*xabs = 51271
A
w3040
51278 >= 25*xabs
25*xabs = 51278
B
w3041
51283 >= 25*xabs
25*xabs = 51283
A
w3042
10258 >= 5*xabs
5*xabs = 10258
B
w3043
51296 >= 25*xabs
25*xabs = 51296
A
w3044
51303 >= 25*xabs
25*xabs = 51303
B

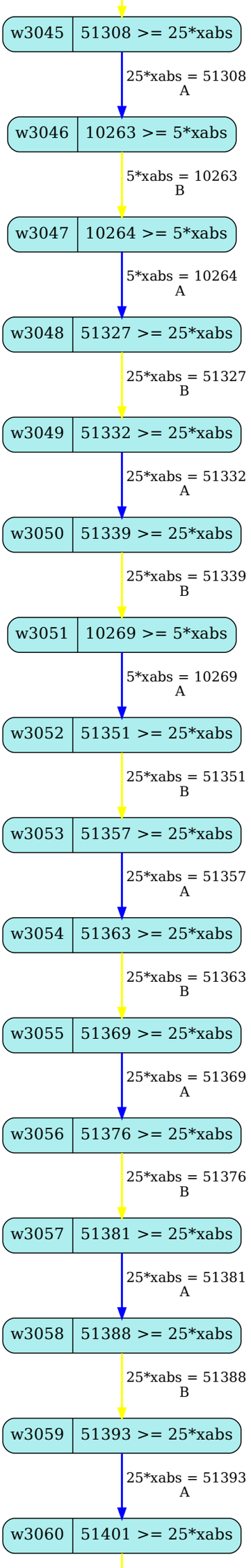
w3045
51308 >= 25*xabs
25*xabs = 51308
A
w3046
10263 >= 5*xabs
5*xabs = 10263
B
w3047
10264 >= 5*xabs
5*xabs = 10264
A
w3048
51327 >= 25*xabs
25*xabs = 51327
B
w3049
51332 >= 25*xabs
25*xabs = 51332
A
w3050
51339 >= 25*xabs
25*xabs = 51339
B
w3051
10269 >= 5*xabs
5*xabs = 10269
A
w3052
51351 >= 25*xabs
25*xabs = 51351
B
w3053
51357 >= 25*xabs
25*xabs = 51357
A
w3054
51363 >= 25*xabs
25*xabs = 51363
B
w3055
51369 >= 25*xabs
25*xabs = 51369
A
w3056
51376 >= 25*xabs
25*xabs = 51376
B
w3057
51381 >= 25*xabs
25*xabs = 51381
A
w3058
51388 >= 25*xabs
25*xabs = 51388
B
w3059
51393 >= 25*xabs
25*xabs = 51393
A
w3060
51401 >= 25*xabs

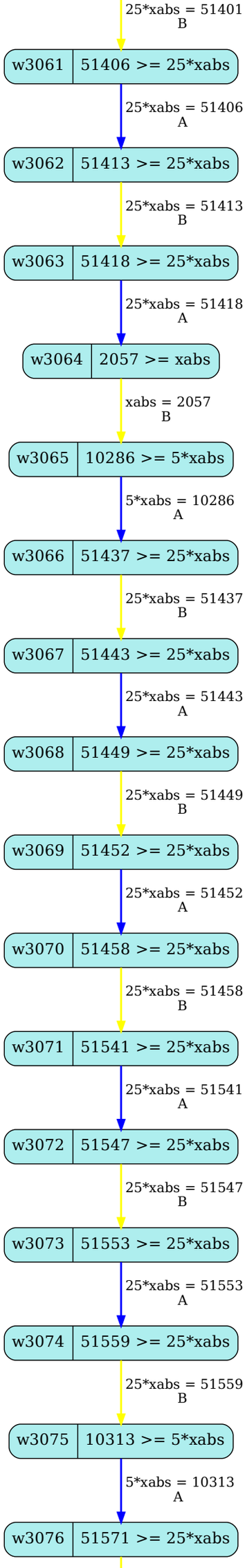
25*xabs = 51401
B
w3061
51406 >= 25*xabs
25*xabs = 51406
A
w3062
51413 >= 25*xabs
25*xabs = 51413
B
w3063
51418 >= 25*xabs
25*xabs = 51418
A
w3064
2057 >= xabs
xabs = 2057
B
w3065
10286 >= 5*xabs
5*xabs = 10286
A
w3066
51437 >= 25*xabs
25*xabs = 51437
B
w3067
51443 >= 25*xabs
25*xabs = 51443
A
w3068
51449 >= 25*xabs
25*xabs = 51449
B
w3069
51452 >= 25*xabs
25*xabs = 51452
A
w3070
51458 >= 25*xabs
25*xabs = 51458
B
w3071
51541 >= 25*xabs
25*xabs = 51541
A
w3072
51547 >= 25*xabs
25*xabs = 51547
B
w3073
51553 >= 25*xabs
25*xabs = 51553
A
w3074
51559 >= 25*xabs
25*xabs = 51559
B
w3075
10313 >= 5*xabs
5*xabs = 10313
A
w3076
51571 >= 25*xabs

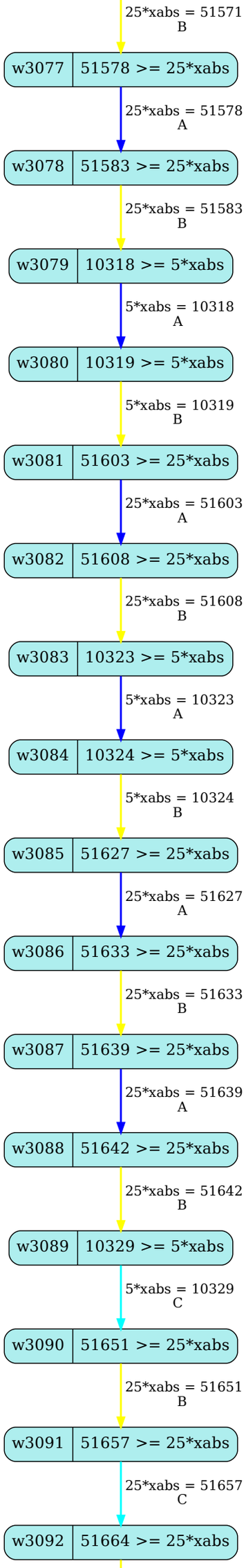
25*xabs = 51571
B
w3077
51578 >= 25*xabs
25*xabs = 51578
A
w3078
51583 >= 25*xabs
25*xabs = 51583
B
w3079
10318 >= 5*xabs
5*xabs = 10318
A
w3080
10319 >= 5*xabs
5*xabs = 10319
B
w3081
51603 >= 25*xabs
25*xabs = 51603
A
w3082
51608 >= 25*xabs
25*xabs = 51608
B
w3083
10323 >= 5*xabs
5*xabs = 10323
A
w3084
10324 >= 5*xabs
5*xabs = 10324
B
w3085
51627 >= 25*xabs
25*xabs = 51627
A
w3086
51633 >= 25*xabs
25*xabs = 51633
B
w3087
51639 >= 25*xabs
25*xabs = 51639
A
w3088
51642 >= 25*xabs
25*xabs = 51642
B
w3089
10329 >= 5*xabs
5*xabs = 10329
C
w3090
51651 >= 25*xabs
25*xabs = 51651
B
w3091
51657 >= 25*xabs
25*xabs = 51657
C
w3092
51664 >= 25*xabs

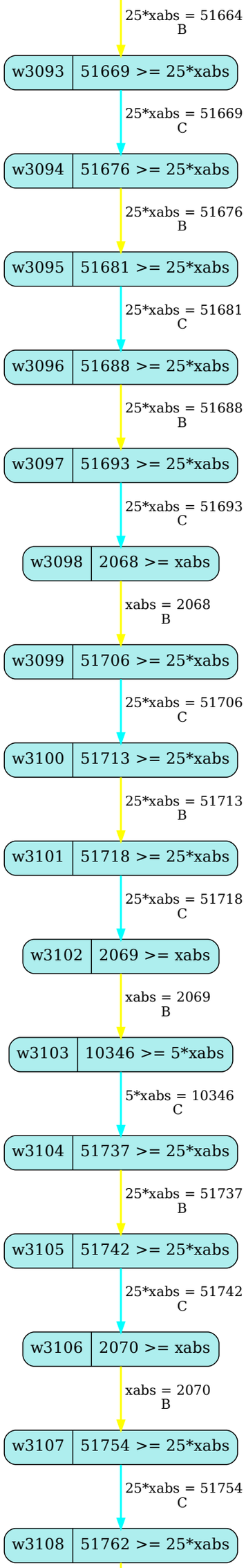
25*xabs = 51664
B
w3093
51669 >= 25*xabs
25*xabs = 51669
C
w3094
51676 >= 25*xabs
25*xabs = 51676
B
w3095
51681 >= 25*xabs
25*xabs = 51681
C
w3096
51688 >= 25*xabs
25*xabs = 51688
B
w3097
51693 >= 25*xabs
25*xabs = 51693
C
w3098
2068 >= xabs
xabs = 2068
B
w3099
51706 >= 25*xabs
25*xabs = 51706
C
w3100
51713 >= 25*xabs
25*xabs = 51713
B
w3101
51718 >= 25*xabs
25*xabs = 51718
C
w3102
2069 >= xabs
xabs = 2069
B
w3103
10346 >= 5*xabs
5*xabs = 10346
C
w3104
51737 >= 25*xabs
25*xabs = 51737
B
w3105
51742 >= 25*xabs
25*xabs = 51742
C
w3106
2070 >= xabs
xabs = 2070
B
w3107
51754 >= 25*xabs
25*xabs = 51754
C
w3108
51762 >= 25*xabs

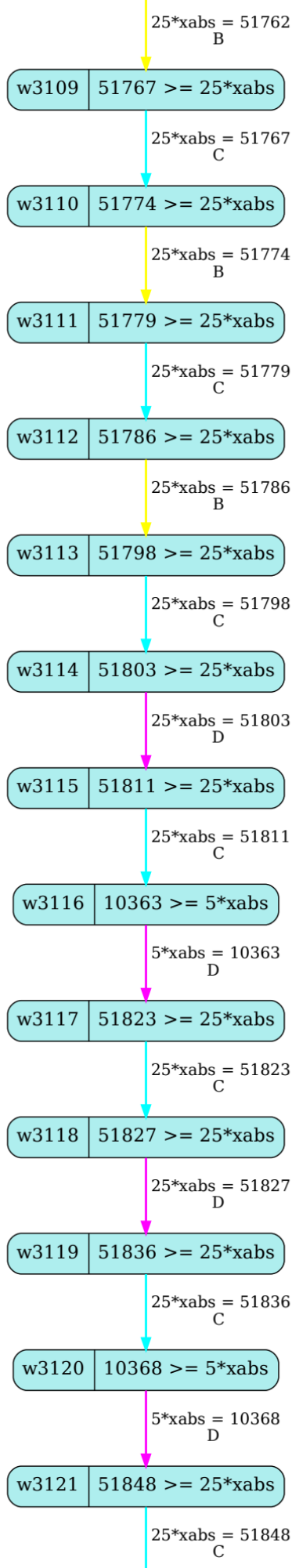
25*xabs = 51762
B
w3109
51767 >= 25*xabs
25*xabs = 51767
C
w3110
51774 >= 25*xabs
25*xabs = 51774
B
w3111
51779 >= 25*xabs
25*xabs = 51779
C
w3112
51786 >= 25*xabs
25*xabs = 51786
B
w3113
51798 >= 25*xabs
25*xabs = 51798
C
w3114
51803 >= 25*xabs
25*xabs = 51803
D
w3115
51811 >= 25*xabs
25*xabs = 51811
C
w3116
10363 >= 5*xabs
5*xabs = 10363
D
w3117
51823 >= 25*xabs
25*xabs = 51823
C
w3118
51827 >= 25*xabs
25*xabs = 51827
D
w3119
51836 >= 25*xabs
25*xabs = 51836
C
w3120
10368 >= 5*xabs
5*xabs = 10368
D
w3121
51848 >= 25*xabs
25*xabs = 51848
C

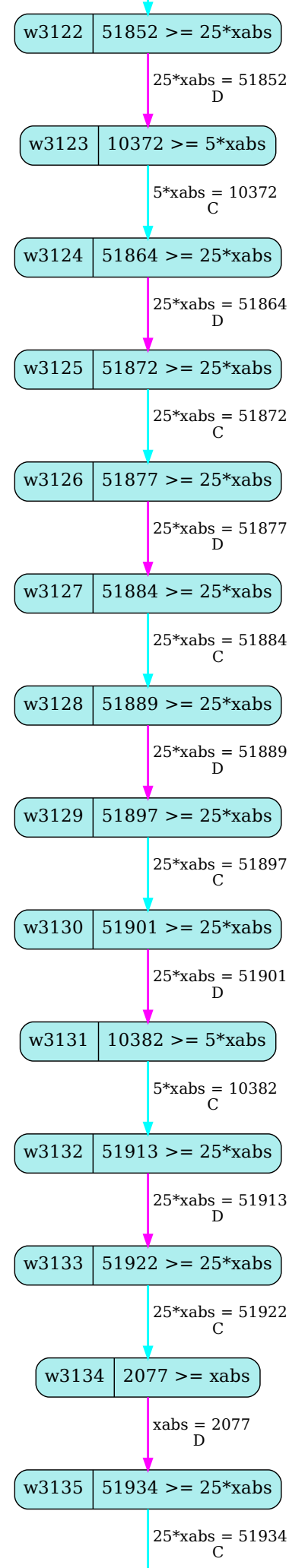
w3122
51852 >= 25*xabs
25*xabs = 51852
D
w3123
10372 >= 5*xabs
5*xabs = 10372
C
w3124
51864 >= 25*xabs
25*xabs = 51864
D
w3125
51872 >= 25*xabs
25*xabs = 51872
C
w3126
51877 >= 25*xabs
25*xabs = 51877
D
w3127
51884 >= 25*xabs
25*xabs = 51884
C
w3128
51889 >= 25*xabs
25*xabs = 51889
D
w3129
51897 >= 25*xabs
25*xabs = 51897
C
w3130
51901 >= 25*xabs
25*xabs = 51901
D
w3131
10382 >= 5*xabs
5*xabs = 10382
C
w3132
51913 >= 25*xabs
25*xabs = 51913
D
w3133
51922 >= 25*xabs
25*xabs = 51922
C
w3134
2077 >= xabs
xabs = 2077
D
w3135
51934 >= 25*xabs
25*xabs = 51934
C

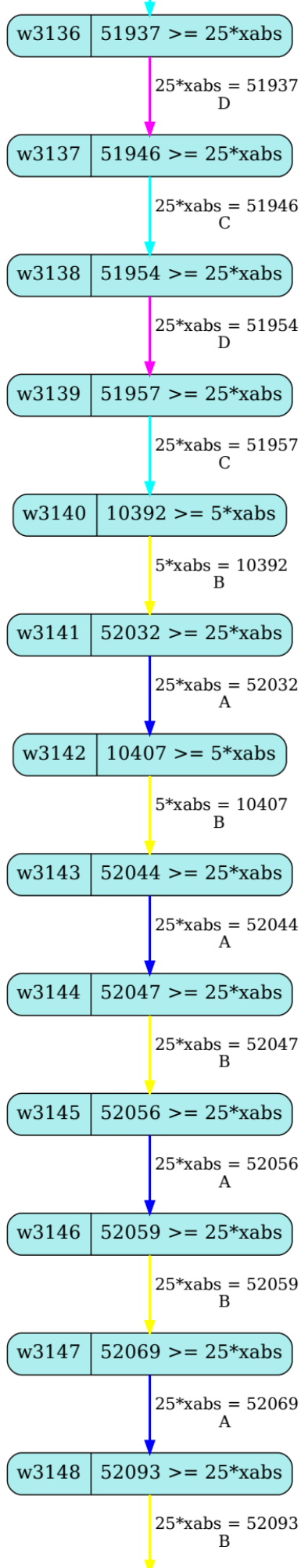
w3136
51937 >= 25*xabs
25*xabs = 51937
D
w3137
51946 >= 25*xabs
25*xabs = 51946
C
w3138
51954 >= 25*xabs
25*xabs = 51954
D
w3139
51957 >= 25*xabs
25*xabs = 51957
C
w3140
10392 >= 5*xabs
5*xabs = 10392
B
w3141
52032 >= 25*xabs
25*xabs = 52032
A
w3142
10407 >= 5*xabs
5*xabs = 10407
B
w3143
52044 >= 25*xabs
25*xabs = 52044
A
w3144
52047 >= 25*xabs
25*xabs = 52047
B
w3145
52056 >= 25*xabs
25*xabs = 52056
A
w3146
52059 >= 25*xabs
25*xabs = 52059
B
w3147
52069 >= 25*xabs
25*xabs = 52069
A
w3148
52093 >= 25*xabs
25*xabs = 52093
B

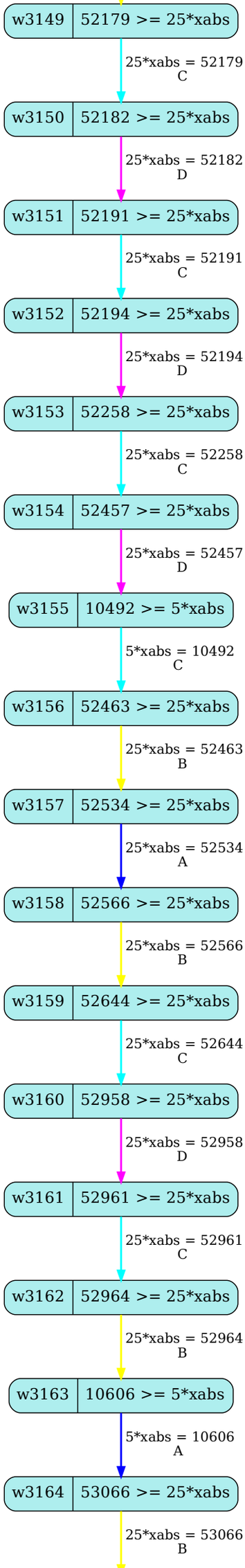
w3149
52179 >= 25*xabs
25*xabs = 52179
C
w3150
52182 >= 25*xabs
25*xabs = 52182
D
w3151
52191 >= 25*xabs
25*xabs = 52191
C
w3152
52194 >= 25*xabs
25*xabs = 52194
D
w3153
52258 >= 25*xabs
25*xabs = 52258
C
w3154
52457 >= 25*xabs
25*xabs = 52457
D
w3155
10492 >= 5*xabs
5*xabs = 10492
C
w3156
52463 >= 25*xabs
25*xabs = 52463
B
w3157
52534 >= 25*xabs
25*xabs = 52534
A
w3158
52566 >= 25*xabs
25*xabs = 52566
B
w3159
52644 >= 25*xabs
25*xabs = 52644
C
w3160
52958 >= 25*xabs
25*xabs = 52958
D
w3161
52961 >= 25*xabs
25*xabs = 52961
C
w3162
52964 >= 25*xabs
25*xabs = 52964
B
w3163
10606 >= 5*xabs
5*xabs = 10606
A
w3164
53066 >= 25*xabs
25*xabs = 53066
B

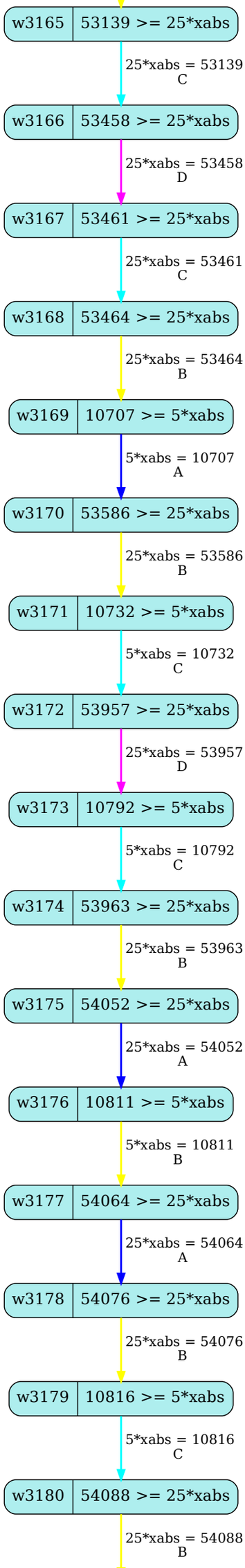
w3165
53139 >= 25*xabs
25*xabs = 53139
C
w3166
53458 >= 25*xabs
25*xabs = 53458
D
w3167
53461 >= 25*xabs
25*xabs = 53461
C
w3168
53464 >= 25*xabs
25*xabs = 53464
B
w3169
10707 >= 5*xabs
5*xabs = 10707
A
w3170
53586 >= 25*xabs
25*xabs = 53586
B
w3171
10732 >= 5*xabs
5*xabs = 10732
C
w3172
53957 >= 25*xabs
25*xabs = 53957
D
w3173
10792 >= 5*xabs
5*xabs = 10792
C
w3174
53963 >= 25*xabs
25*xabs = 53963
B
w3175
54052 >= 25*xabs
25*xabs = 54052
A
w3176
10811 >= 5*xabs
5*xabs = 10811
B
w3177
54064 >= 25*xabs
25*xabs = 54064
A
w3178
54076 >= 25*xabs
25*xabs = 54076
B
w3179
10816 >= 5*xabs
5*xabs = 10816
C
w3180
54088 >= 25*xabs
25*xabs = 54088
B

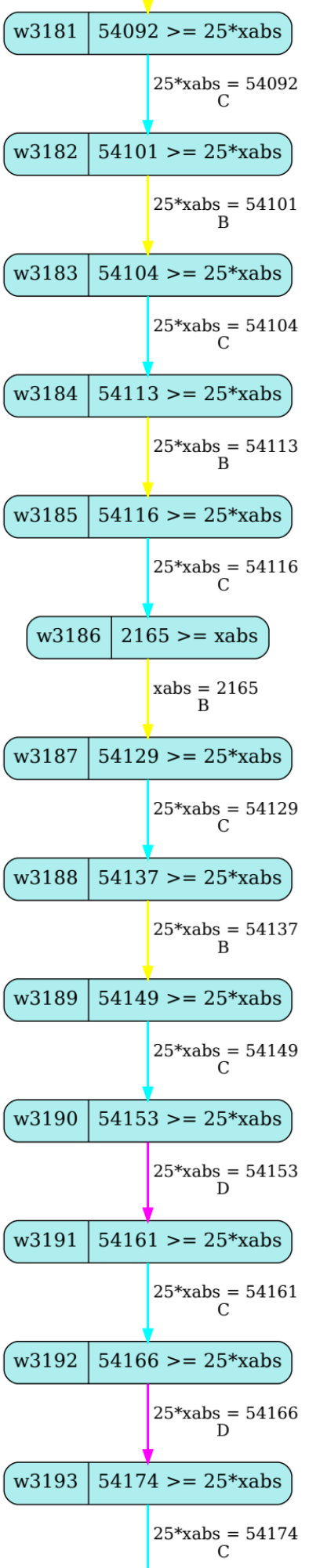
w3181
54092 >= 25*xabs
25*xabs = 54092
C
w3182
54101 >= 25*xabs
25*xabs = 54101
B
w3183
54104 >= 25*xabs
25*xabs = 54104
C
w3184
54113 >= 25*xabs
25*xabs = 54113
B
w3185
54116 >= 25*xabs
25*xabs = 54116
C
w3186
2165 >= xabs
xabs = 2165
B
w3187
54129 >= 25*xabs
25*xabs = 54129
C
w3188
54137 >= 25*xabs
25*xabs = 54137
B
w3189
54149 >= 25*xabs
25*xabs = 54149
C
w3190
54153 >= 25*xabs
25*xabs = 54153
D
w3191
54161 >= 25*xabs
25*xabs = 54161
C
w3192
54166 >= 25*xabs
25*xabs = 54166
D
w3193
54174 >= 25*xabs
25*xabs = 54174
C

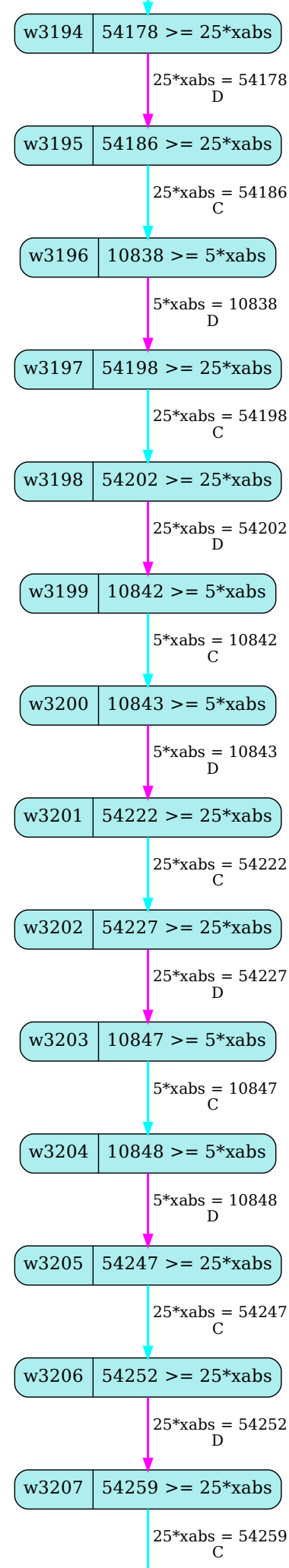
w3194
54178 >= 25*xabs
25*xabs = 54178
D
w3195
54186 >= 25*xabs
25*xabs = 54186
C
w3196
10838 >= 5*xabs
5*xabs = 10838
D
w3197
54198 >= 25*xabs
25*xabs = 54198
C
w3198
54202 >= 25*xabs
25*xabs = 54202
D
w3199
10842 >= 5*xabs
5*xabs = 10842
C
w3200
10843 >= 5*xabs
5*xabs = 10843
D
w3201
54222 >= 25*xabs
25*xabs = 54222
C
w3202
54227 >= 25*xabs
25*xabs = 54227
D
w3203
10847 >= 5*xabs
5*xabs = 10847
C
w3204
10848 >= 5*xabs
5*xabs = 10848
D
w3205
54247 >= 25*xabs
25*xabs = 54247
C
w3206
54252 >= 25*xabs
25*xabs = 54252
D
w3207
54259 >= 25*xabs
25*xabs = 54259
C

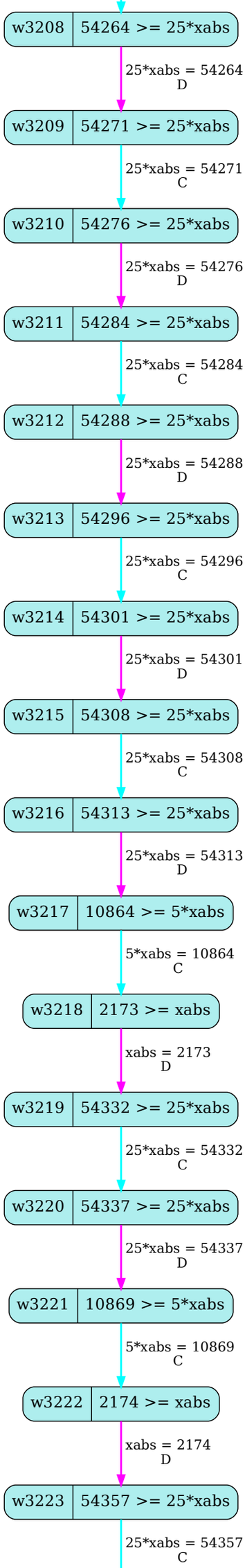
w3208
54264 >= 25*xabs
25*xabs = 54264
D
w3209
54271 >= 25*xabs
25*xabs = 54271
C
w3210
54276 >= 25*xabs
25*xabs = 54276
D
w3211
54284 >= 25*xabs
25*xabs = 54284
C
w3212
54288 >= 25*xabs
25*xabs = 54288
D
w3213
54296 >= 25*xabs
25*xabs = 54296
C
w3214
54301 >= 25*xabs
25*xabs = 54301
D
w3215
54308 >= 25*xabs
25*xabs = 54308
C
w3216
54313 >= 25*xabs
25*xabs = 54313
D
w3217
10864 >= 5*xabs
5*xabs = 10864
C
w3218
2173 >= xabs
xabs = 2173
D
w3219
54332 >= 25*xabs
25*xabs = 54332
C
w3220
54337 >= 25*xabs
25*xabs = 54337
D
w3221
10869 >= 5*xabs
5*xabs = 10869
C
w3222
2174 >= xabs
xabs = 2174
D
w3223
54357 >= 25*xabs
25*xabs = 54357
C

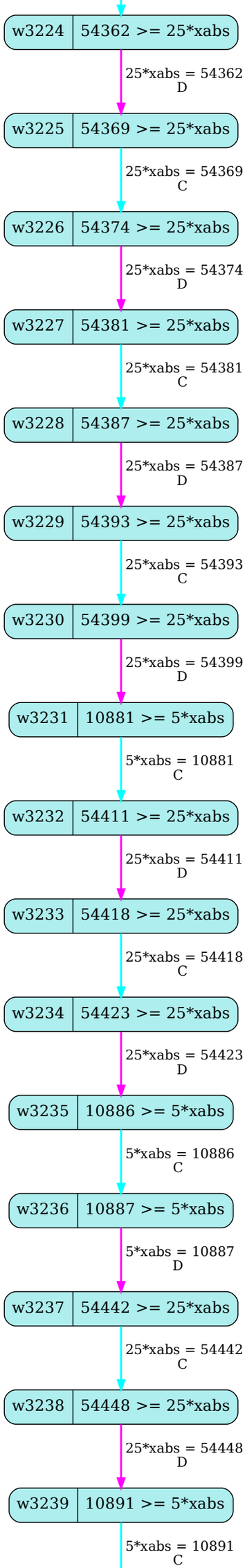
w3224
54362 >= 25*xabs
25*xabs = 54362
D
w3225
54369 >= 25*xabs
25*xabs = 54369
C
w3226
54374 >= 25*xabs
25*xabs = 54374
D
w3227
54381 >= 25*xabs
25*xabs = 54381
C
w3228
54387 >= 25*xabs
25*xabs = 54387
D
w3229
54393 >= 25*xabs
25*xabs = 54393
C
w3230
54399 >= 25*xabs
25*xabs = 54399
D
w3231
10881 >= 5*xabs
5*xabs = 10881
C
w3232
54411 >= 25*xabs
25*xabs = 54411
D
w3233
54418 >= 25*xabs
25*xabs = 54418
C
w3234
54423 >= 25*xabs
25*xabs = 54423
D
w3235
10886 >= 5*xabs
5*xabs = 10886
C
w3236
10887 >= 5*xabs
5*xabs = 10887
D
w3237
54442 >= 25*xabs
25*xabs = 54442
C
w3238
54448 >= 25*xabs
25*xabs = 54448
D
w3239
10891 >= 5*xabs
5*xabs = 10891
C

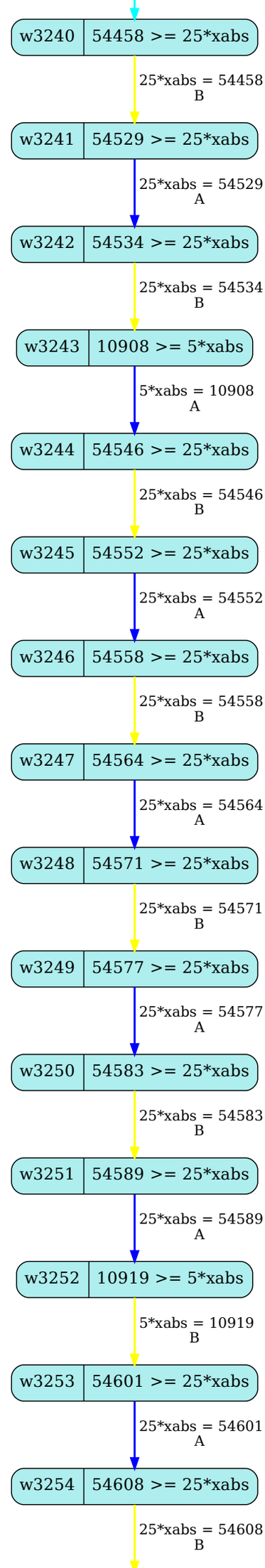
w3240
54458 >= 25*xabs
25*xabs = 54458
B
w3241
54529 >= 25*xabs
25*xabs = 54529
A
w3242
54534 >= 25*xabs
25*xabs = 54534
B
w3243
10908 >= 5*xabs
5*xabs = 10908
A
w3244
54546 >= 25*xabs
25*xabs = 54546
B
w3245
54552 >= 25*xabs
25*xabs = 54552
A
w3246
54558 >= 25*xabs
25*xabs = 54558
B
w3247
54564 >= 25*xabs
25*xabs = 54564
A
w3248
54571 >= 25*xabs
25*xabs = 54571
B
w3249
54577 >= 25*xabs
25*xabs = 54577
A
w3250
54583 >= 25*xabs
25*xabs = 54583
B
w3251
54589 >= 25*xabs
25*xabs = 54589
A
w3252
10919 >= 5*xabs
5*xabs = 10919
B
w3253
54601 >= 25*xabs
25*xabs = 54601
A
w3254
54608 >= 25*xabs
25*xabs = 54608
B

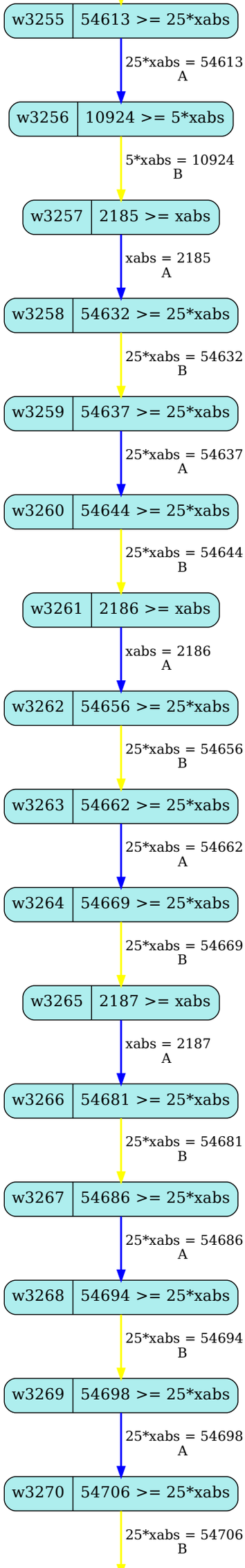
w3255
54613 >= 25*xabs
25*xabs = 54613
A
w3256
10924 >= 5*xabs
5*xabs = 10924
B
w3257
2185 >= xabs
xabs = 2185
A
w3258
54632 >= 25*xabs
25*xabs = 54632
B
w3259
54637 >= 25*xabs
25*xabs = 54637
A
w3260
54644 >= 25*xabs
25*xabs = 54644
B
w3261
2186 >= xabs
xabs = 2186
A
w3262
54656 >= 25*xabs
25*xabs = 54656
B
w3263
54662 >= 25*xabs
25*xabs = 54662
A
w3264
54669 >= 25*xabs
25*xabs = 54669
B
w3265
2187 >= xabs
xabs = 2187
A
w3266
54681 >= 25*xabs
25*xabs = 54681
B
w3267
54686 >= 25*xabs
25*xabs = 54686
A
w3268
54694 >= 25*xabs
25*xabs = 54694
B
w3269
54698 >= 25*xabs
25*xabs = 54698
A
w3270
54706 >= 25*xabs
25*xabs = 54706
B

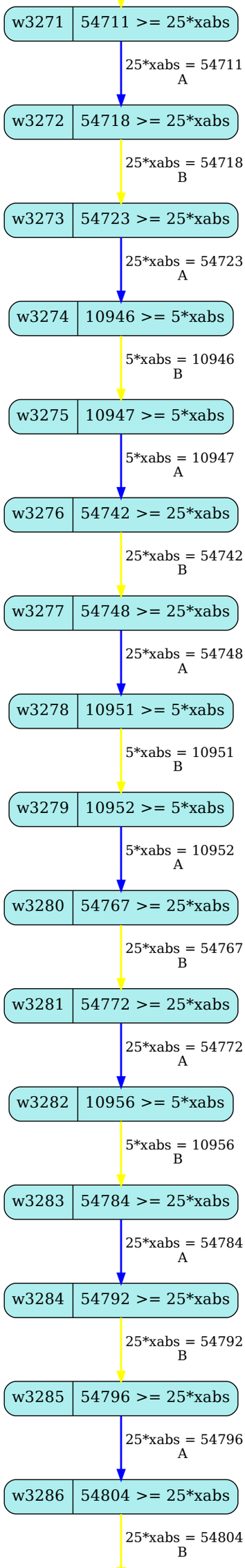
w3271
54711 >= 25*xabs
25*xabs = 54711
A
w3272
54718 >= 25*xabs
25*xabs = 54718
B
w3273
54723 >= 25*xabs
25*xabs = 54723
A
w3274
10946 >= 5*xabs
5*xabs = 10946
B
w3275
10947 >= 5*xabs
5*xabs = 10947
A
w3276
54742 >= 25*xabs
25*xabs = 54742
B
w3277
54748 >= 25*xabs
25*xabs = 54748
A
w3278
10951 >= 5*xabs
5*xabs = 10951
B
w3279
10952 >= 5*xabs
5*xabs = 10952
A
w3280
54767 >= 25*xabs
25*xabs = 54767
B
w3281
54772 >= 25*xabs
25*xabs = 54772
A
w3282
10956 >= 5*xabs
5*xabs = 10956
B
w3283
54784 >= 25*xabs
25*xabs = 54784
A
w3284
54792 >= 25*xabs
25*xabs = 54792
B
w3285
54796 >= 25*xabs
25*xabs = 54796
A
w3286
54804 >= 25*xabs
25*xabs = 54804
B

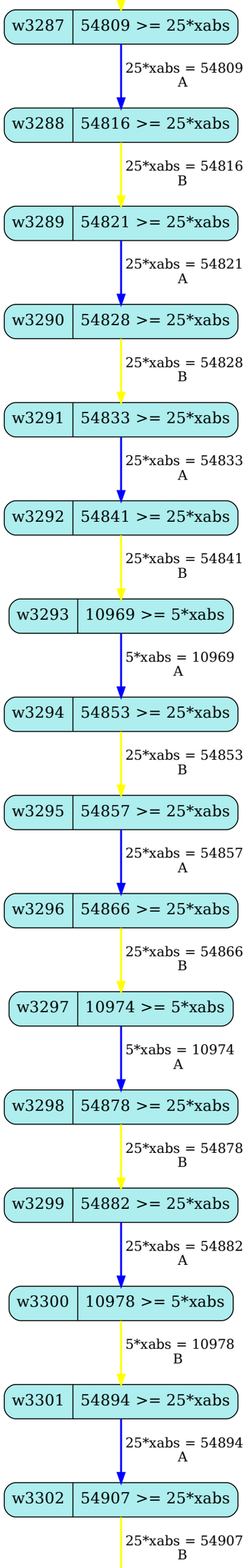
w3287
54809 >= 25*xabs
25*xabs = 54809
A
w3288
54816 >= 25*xabs
25*xabs = 54816
B
w3289
54821 >= 25*xabs
25*xabs = 54821
A
w3290
54828 >= 25*xabs
25*xabs = 54828
B
w3291
54833 >= 25*xabs
25*xabs = 54833
A
w3292
54841 >= 25*xabs
25*xabs = 54841
B
w3293
10969 >= 5*xabs
5*xabs = 10969
A
w3294
54853 >= 25*xabs
25*xabs = 54853
B
w3295
54857 >= 25*xabs
25*xabs = 54857
A
w3296
54866 >= 25*xabs
25*xabs = 54866
B
w3297
10974 >= 5*xabs
5*xabs = 10974
A
w3298
54878 >= 25*xabs
25*xabs = 54878
B
w3299
54882 >= 25*xabs
25*xabs = 54882
A
w3300
10978 >= 5*xabs
5*xabs = 10978
B
w3301
54894 >= 25*xabs
25*xabs = 54894
A
w3302
54907 >= 25*xabs
25*xabs = 54907
B

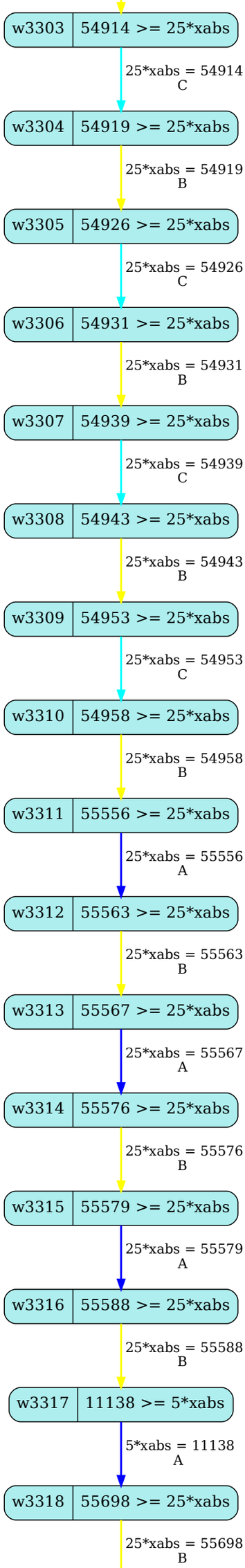
w3303
54914 >= 25*xabs
25*xabs = 54914
C
w3304
54919 >= 25*xabs
25*xabs = 54919
B
w3305
54926 >= 25*xabs
25*xabs = 54926
C
w3306
54931 >= 25*xabs
25*xabs = 54931
B
w3307
54939 >= 25*xabs
25*xabs = 54939
C
w3308
54943 >= 25*xabs
25*xabs = 54943
B
w3309
54953 >= 25*xabs
25*xabs = 54953
C
w3310
54958 >= 25*xabs
25*xabs = 54958
B
w3311
55556 >= 25*xabs
25*xabs = 55556
A
w3312
55563 >= 25*xabs
25*xabs = 55563
B
w3313
55567 >= 25*xabs
25*xabs = 55567
A
w3314
55576 >= 25*xabs
25*xabs = 55576
B
w3315
55579 >= 25*xabs
25*xabs = 55579
A
w3316
55588 >= 25*xabs
25*xabs = 55588
B
w3317
11138 >= 5*xabs
5*xabs = 11138
A
w3318
55698 >= 25*xabs
25*xabs = 55698
B

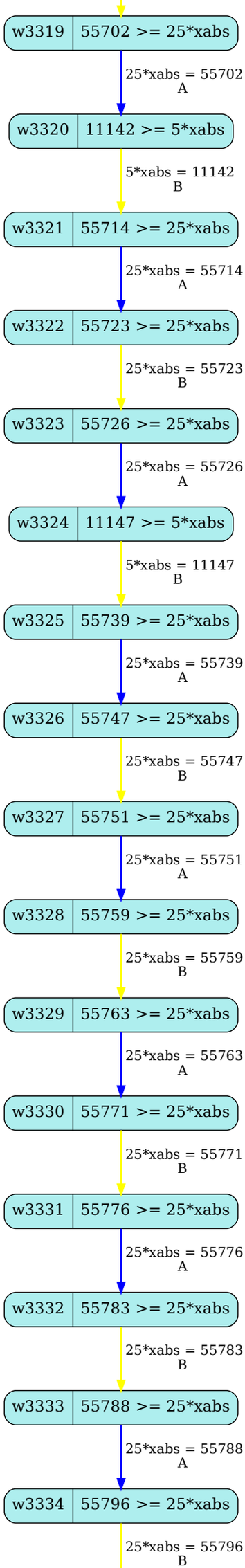
w3319
55702 >= 25*xabs
25*xabs = 55702
A
w3320
11142 >= 5*xabs
5*xabs = 11142
B
w3321
55714 >= 25*xabs
25*xabs = 55714
A
w3322
55723 >= 25*xabs
25*xabs = 55723
B
w3323
55726 >= 25*xabs
25*xabs = 55726
A
w3324
11147 >= 5*xabs
5*xabs = 11147
B
w3325
55739 >= 25*xabs
25*xabs = 55739
A
w3326
55747 >= 25*xabs
25*xabs = 55747
B
w3327
55751 >= 25*xabs
25*xabs = 55751
A
w3328
55759 >= 25*xabs
25*xabs = 55759
B
w3329
55763 >= 25*xabs
25*xabs = 55763
A
w3330
55771 >= 25*xabs
25*xabs = 55771
B
w3331
55776 >= 25*xabs
25*xabs = 55776
A
w3332
55783 >= 25*xabs
25*xabs = 55783
B
w3333
55788 >= 25*xabs
25*xabs = 55788
A
w3334
55796 >= 25*xabs
25*xabs = 55796
B

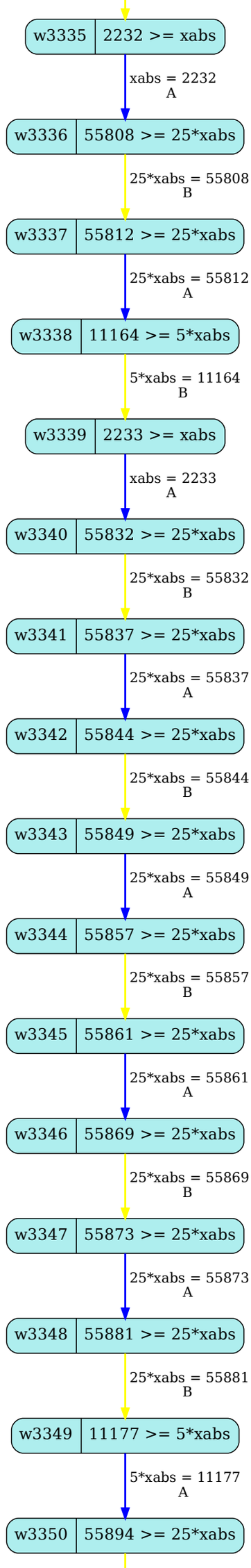
w3335
2232 >= xabs
xabs = 2232
A
w3336
55808 >= 25*xabs
25*xabs = 55808
B
w3337
55812 >= 25*xabs
25*xabs = 55812
A
w3338
11164 >= 5*xabs
5*xabs = 11164
B
w3339
2233 >= xabs
xabs = 2233
A
w3340
55832 >= 25*xabs
25*xabs = 55832
B
w3341
55837 >= 25*xabs
25*xabs = 55837
A
w3342
55844 >= 25*xabs
25*xabs = 55844
B
w3343
55849 >= 25*xabs
25*xabs = 55849
A
w3344
55857 >= 25*xabs
25*xabs = 55857
B
w3345
55861 >= 25*xabs
25*xabs = 55861
A
w3346
55869 >= 25*xabs
25*xabs = 55869
B
w3347
55873 >= 25*xabs
25*xabs = 55873
A
w3348
55881 >= 25*xabs
25*xabs = 55881
B
w3349
11177 >= 5*xabs
5*xabs = 11177
A
w3350
55894 >= 25*xabs

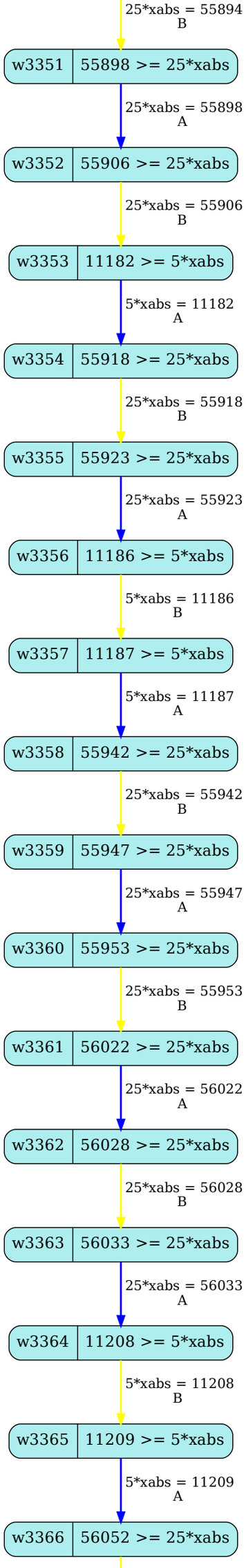
25*xabs = 55894
B
w3351
55898 >= 25*xabs
25*xabs = 55898
A
w3352
55906 >= 25*xabs
25*xabs = 55906
B
w3353
11182 >= 5*xabs
5*xabs = 11182
A
w3354
55918 >= 25*xabs
25*xabs = 55918
B
w3355
55923 >= 25*xabs
25*xabs = 55923
A
w3356
11186 >= 5*xabs
5*xabs = 11186
B
w3357
11187 >= 5*xabs
5*xabs = 11187
A
w3358
55942 >= 25*xabs
25*xabs = 55942
B
w3359
55947 >= 25*xabs
25*xabs = 55947
A
w3360
55953 >= 25*xabs
25*xabs = 55953
B
w3361
56022 >= 25*xabs
25*xabs = 56022
A
w3362
56028 >= 25*xabs
25*xabs = 56028
B
w3363
56033 >= 25*xabs
25*xabs = 56033
A
w3364
11208 >= 5*xabs
5*xabs = 11208
B
w3365
11209 >= 5*xabs
5*xabs = 11209
A
w3366
56052 >= 25*xabs

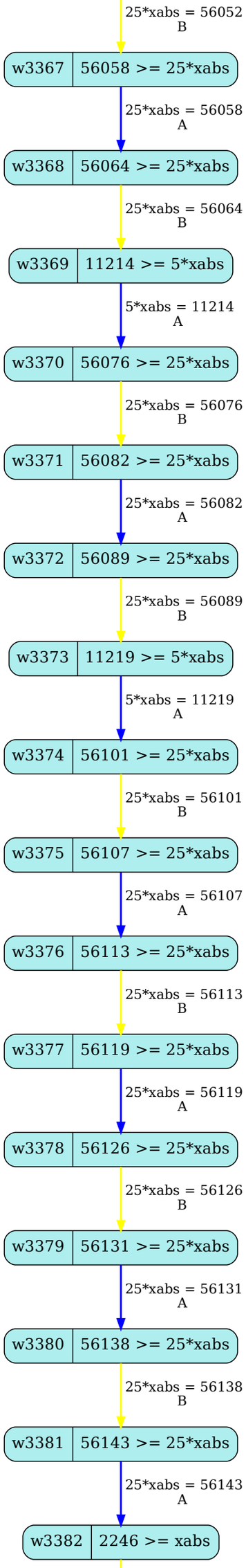
25*xabs = 56052
B
w3367
56058 >= 25*xabs
25*xabs = 56058
A
w3368
56064 >= 25*xabs
25*xabs = 56064
B
w3369
11214 >= 5*xabs
5*xabs = 11214
A
w3370
56076 >= 25*xabs
25*xabs = 56076
B
w3371
56082 >= 25*xabs
25*xabs = 56082
A
w3372
56089 >= 25*xabs
25*xabs = 56089
B
w3373
11219 >= 5*xabs
5*xabs = 11219
A
w3374
56101 >= 25*xabs
25*xabs = 56101
B
w3375
56107 >= 25*xabs
25*xabs = 56107
A
w3376
56113 >= 25*xabs
25*xabs = 56113
B
w3377
56119 >= 25*xabs
25*xabs = 56119
A
w3378
56126 >= 25*xabs
25*xabs = 56126
B
w3379
56131 >= 25*xabs
25*xabs = 56131
A
w3380
56138 >= 25*xabs
25*xabs = 56138
B
w3381
56143 >= 25*xabs
25*xabs = 56143
A
w3382
2246 >= xabs

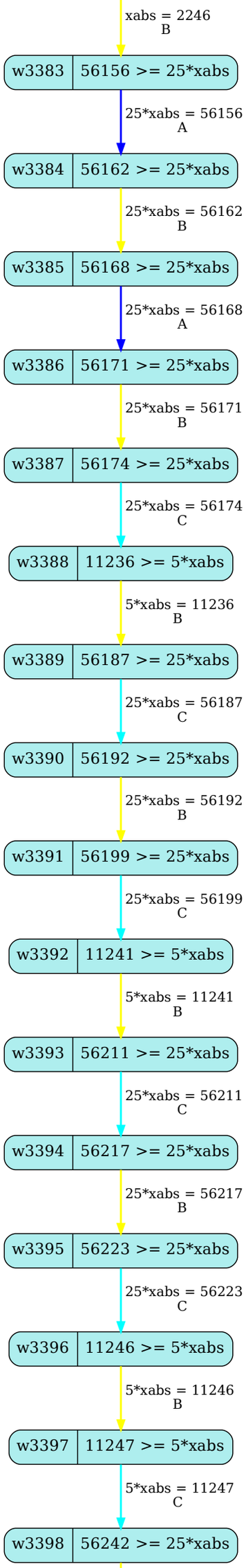
xabs = 2246
B
w3383
56156 >= 25*xabs
25*xabs = 56156
A
w3384
56162 >= 25*xabs
25*xabs = 56162
B
w3385
56168 >= 25*xabs
25*xabs = 56168
A
w3386
56171 >= 25*xabs
25*xabs = 56171
B
w3387
56174 >= 25*xabs
25*xabs = 56174
C
w3388
11236 >= 5*xabs
5*xabs = 11236
B
w3389
56187 >= 25*xabs
25*xabs = 56187
C
w3390
56192 >= 25*xabs
25*xabs = 56192
B
w3391
56199 >= 25*xabs
25*xabs = 56199
C
w3392
11241 >= 5*xabs
5*xabs = 11241
B
w3393
56211 >= 25*xabs
25*xabs = 56211
C
w3394
56217 >= 25*xabs
25*xabs = 56217
B
w3395
56223 >= 25*xabs
25*xabs = 56223
C
w3396
11246 >= 5*xabs
5*xabs = 11246
B
w3397
11247 >= 5*xabs
5*xabs = 11247
C
w3398
56242 >= 25*xabs

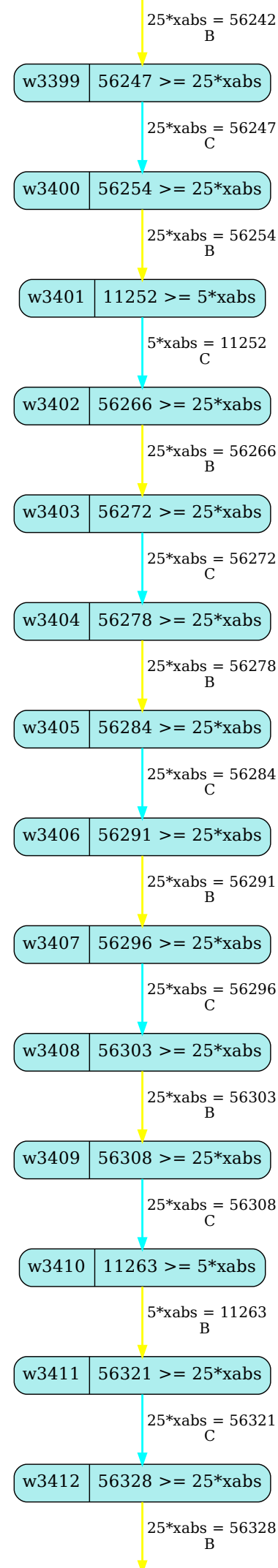
25*xabs = 56242
B
w3399
56247 >= 25*xabs
25*xabs = 56247
C
w3400
56254 >= 25*xabs
25*xabs = 56254
B
w3401
11252 >= 5*xabs
5*xabs = 11252
C
w3402
56266 >= 25*xabs
25*xabs = 56266
B
w3403
56272 >= 25*xabs
25*xabs = 56272
C
w3404
56278 >= 25*xabs
25*xabs = 56278
B
w3405
56284 >= 25*xabs
25*xabs = 56284
C
w3406
56291 >= 25*xabs
25*xabs = 56291
B
w3407
56296 >= 25*xabs
25*xabs = 56296
C
w3408
56303 >= 25*xabs
25*xabs = 56303
B
w3409
56308 >= 25*xabs
25*xabs = 56308
C
w3410
11263 >= 5*xabs
5*xabs = 11263
B
w3411
56321 >= 25*xabs
25*xabs = 56321
C
w3412
56328 >= 25*xabs
25*xabs = 56328
B

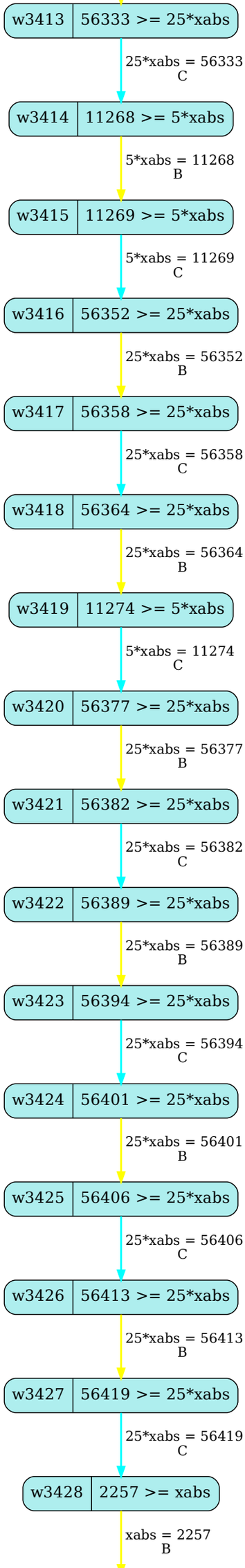
w3413
56333 >= 25*xabs
25*xabs = 56333
C
w3414
11268 >= 5*xabs
5*xabs = 11268
B
w3415
11269 >= 5*xabs
5*xabs = 11269
C
w3416
56352 >= 25*xabs
25*xabs = 56352
B
w3417
56358 >= 25*xabs
25*xabs = 56358
C
w3418
56364 >= 25*xabs
25*xabs = 56364
B
w3419
11274 >= 5*xabs
5*xabs = 11274
C
w3420
56377 >= 25*xabs
25*xabs = 56377
B
w3421
56382 >= 25*xabs
25*xabs = 56382
C
w3422
56389 >= 25*xabs
25*xabs = 56389
B
w3423
56394 >= 25*xabs
25*xabs = 56394
C
w3424
56401 >= 25*xabs
25*xabs = 56401
B
w3425
56406 >= 25*xabs
25*xabs = 56406
C
w3426
56413 >= 25*xabs
25*xabs = 56413
B
w3427
56419 >= 25*xabs
25*xabs = 56419
C
w3428
2257 >= xabs
xabs = 2257
B

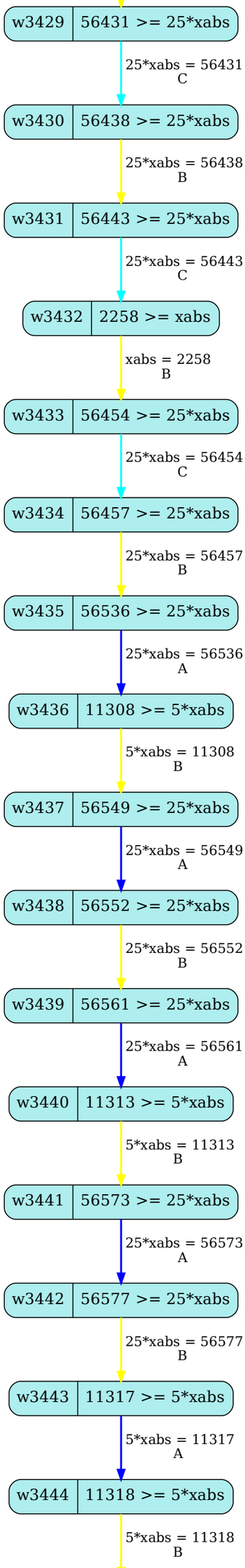
w3429
56431 >= 25*xabs
25*xabs = 56431
C
w3430
56438 >= 25*xabs
25*xabs = 56438
B
w3431
56443 >= 25*xabs
25*xabs = 56443
C
w3432
2258 >= xabs
xabs = 2258
B
w3433
56454 >= 25*xabs
25*xabs = 56454
C
w3434
56457 >= 25*xabs
25*xabs = 56457
B
w3435
56536 >= 25*xabs
25*xabs = 56536
A
w3436
11308 >= 5*xabs
5*xabs = 11308
B
w3437
56549 >= 25*xabs
25*xabs = 56549
A
w3438
56552 >= 25*xabs
25*xabs = 56552
B
w3439
56561 >= 25*xabs
25*xabs = 56561
A
w3440
11313 >= 5*xabs
5*xabs = 11313
B
w3441
56573 >= 25*xabs
25*xabs = 56573
A
w3442
56577 >= 25*xabs
25*xabs = 56577
B
w3443
11317 >= 5*xabs
5*xabs = 11317
A
w3444
11318 >= 5*xabs
5*xabs = 11318
B

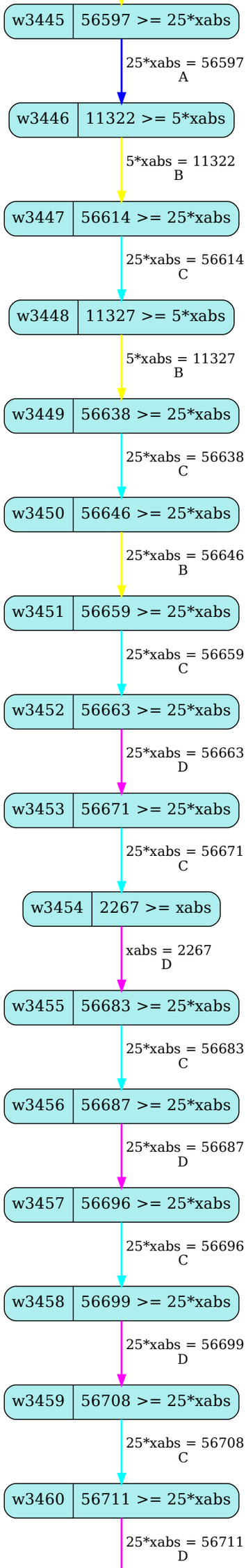
w3445
56597 >= 25*xabs
25*xabs = 56597
A
w3446
11322 >= 5*xabs
5*xabs = 11322
B
w3447
56614 >= 25*xabs
25*xabs = 56614
C
w3448
11327 >= 5*xabs
5*xabs = 11327
B
w3449
56638 >= 25*xabs
25*xabs = 56638
C
w3450
56646 >= 25*xabs
25*xabs = 56646
B
w3451
56659 >= 25*xabs
25*xabs = 56659
C
w3452
56663 >= 25*xabs
25*xabs = 56663
D
w3453
56671 >= 25*xabs
25*xabs = 56671
C
w3454
2267 >= xabs
xabs = 2267
D
w3455
56683 >= 25*xabs
25*xabs = 56683
C
w3456
56687 >= 25*xabs
25*xabs = 56687
D
w3457
56696 >= 25*xabs
25*xabs = 56696
C
w3458
56699 >= 25*xabs
25*xabs = 56699
D
w3459
56708 >= 25*xabs
25*xabs = 56708
C
w3460
56711 >= 25*xabs
25*xabs = 56711
D

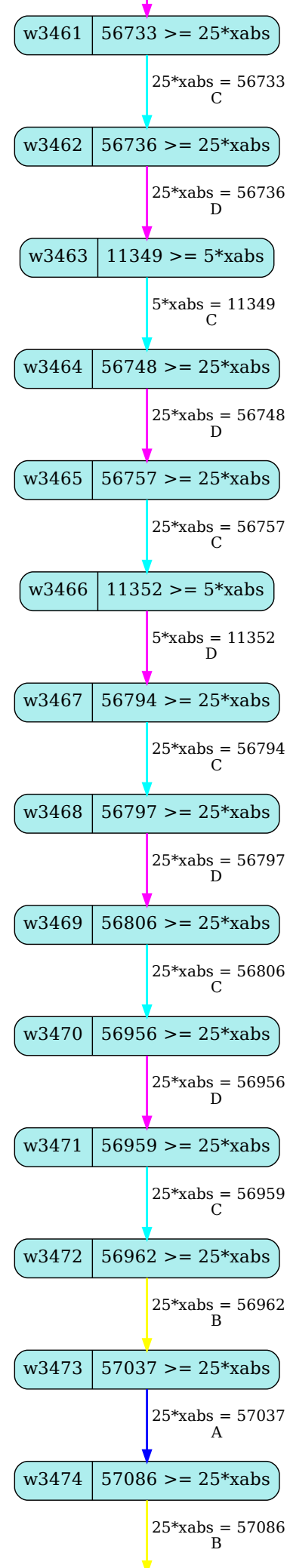
w3461
56733 >= 25*xabs
25*xabs = 56733
C
w3462
56736 >= 25*xabs
25*xabs = 56736
D
w3463
11349 >= 5*xabs
5*xabs = 11349
C
w3464
56748 >= 25*xabs
25*xabs = 56748
D
w3465
56757 >= 25*xabs
25*xabs = 56757
C
w3466
11352 >= 5*xabs
5*xabs = 11352
D
w3467
56794 >= 25*xabs
25*xabs = 56794
C
w3468
56797 >= 25*xabs
25*xabs = 56797
D
w3469
56806 >= 25*xabs
25*xabs = 56806
C
w3470
56956 >= 25*xabs
25*xabs = 56956
D
w3471
56959 >= 25*xabs
25*xabs = 56959
C
w3472
56962 >= 25*xabs
25*xabs = 56962
B
w3473
57037 >= 25*xabs
25*xabs = 57037
A
w3474
57086 >= 25*xabs
25*xabs = 57086
B

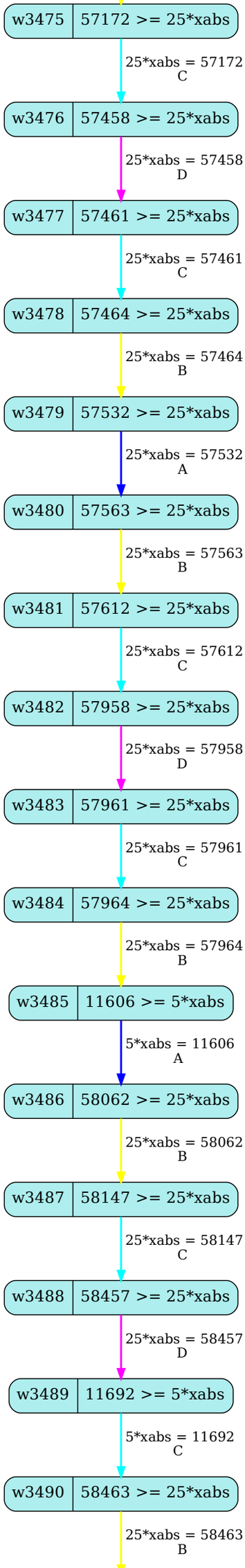
w3475
57172 >= 25*xabs
25*xabs = 57172
C
w3476
57458 >= 25*xabs
25*xabs = 57458
D
w3477
57461 >= 25*xabs
25*xabs = 57461
C
w3478
57464 >= 25*xabs
25*xabs = 57464
B
w3479
57532 >= 25*xabs
25*xabs = 57532
A
w3480
57563 >= 25*xabs
25*xabs = 57563
B
w3481
57612 >= 25*xabs
25*xabs = 57612
C
w3482
57958 >= 25*xabs
25*xabs = 57958
D
w3483
57961 >= 25*xabs
25*xabs = 57961
C
w3484
57964 >= 25*xabs
25*xabs = 57964
B
w3485
11606 >= 5*xabs
5*xabs = 11606
A
w3486
58062 >= 25*xabs
25*xabs = 58062
B
w3487
58147 >= 25*xabs
25*xabs = 58147
C
w3488
58457 >= 25*xabs
25*xabs = 58457
D
w3489
11692 >= 5*xabs
5*xabs = 11692
C
w3490
58463 >= 25*xabs
25*xabs = 58463
B

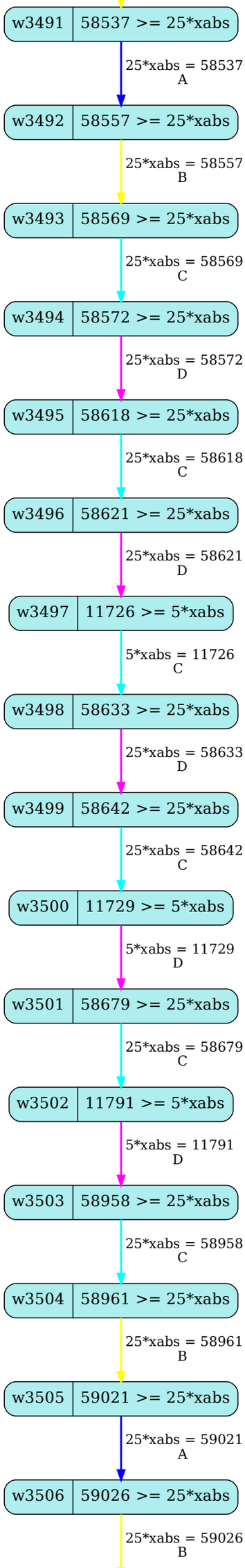
w3491
58537 >= 25*xabs
25*xabs = 58537
A
w3492
58557 >= 25*xabs
25*xabs = 58557
B
w3493
58569 >= 25*xabs
25*xabs = 58569
C
w3494
58572 >= 25*xabs
25*xabs = 58572
D
w3495
58618 >= 25*xabs
25*xabs = 58618
C
w3496
58621 >= 25*xabs
25*xabs = 58621
D
w3497
11726 >= 5*xabs
5*xabs = 11726
C
w3498
58633 >= 25*xabs
25*xabs = 58633
D
w3499
58642 >= 25*xabs
25*xabs = 58642
C
w3500
11729 >= 5*xabs
5*xabs = 11729
D
w3501
58679 >= 25*xabs
25*xabs = 58679
C
w3502
11791 >= 5*xabs
5*xabs = 11791
D
w3503
58958 >= 25*xabs
25*xabs = 58958
C
w3504
58961 >= 25*xabs
25*xabs = 58961
B
w3505
59021 >= 25*xabs
25*xabs = 59021
A
w3506
59026 >= 25*xabs
25*xabs = 59026
B

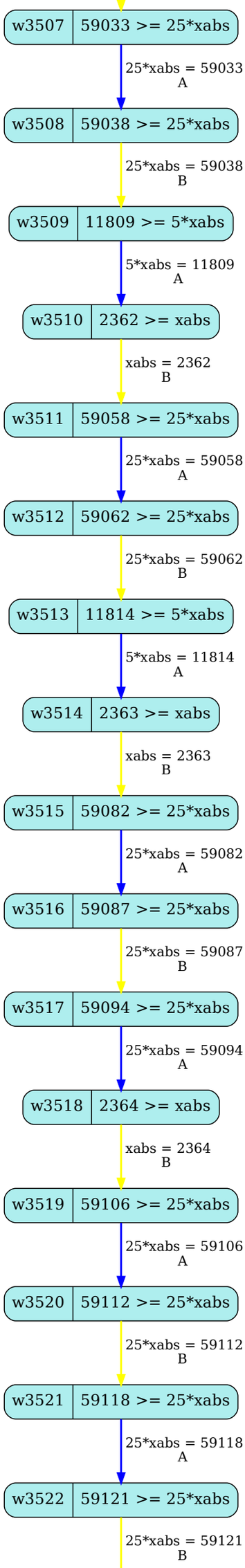
w3507
59033 >= 25*xabs
25*xabs = 59033
A
w3508
59038 >= 25*xabs
25*xabs = 59038
B
w3509
11809 >= 5*xabs
5*xabs = 11809
A
w3510
2362 >= xabs
xabs = 2362
B
w3511
59058 >= 25*xabs
25*xabs = 59058
A
w3512
59062 >= 25*xabs
25*xabs = 59062
B
w3513
11814 >= 5*xabs
5*xabs = 11814
A
w3514
2363 >= xabs
xabs = 2363
B
w3515
59082 >= 25*xabs
25*xabs = 59082
A
w3516
59087 >= 25*xabs
25*xabs = 59087
B
w3517
59094 >= 25*xabs
25*xabs = 59094
A
w3518
2364 >= xabs
xabs = 2364
B
w3519
59106 >= 25*xabs
25*xabs = 59106
A
w3520
59112 >= 25*xabs
25*xabs = 59112
B
w3521
59118 >= 25*xabs
25*xabs = 59118
A
w3522
59121 >= 25*xabs
25*xabs = 59121
B

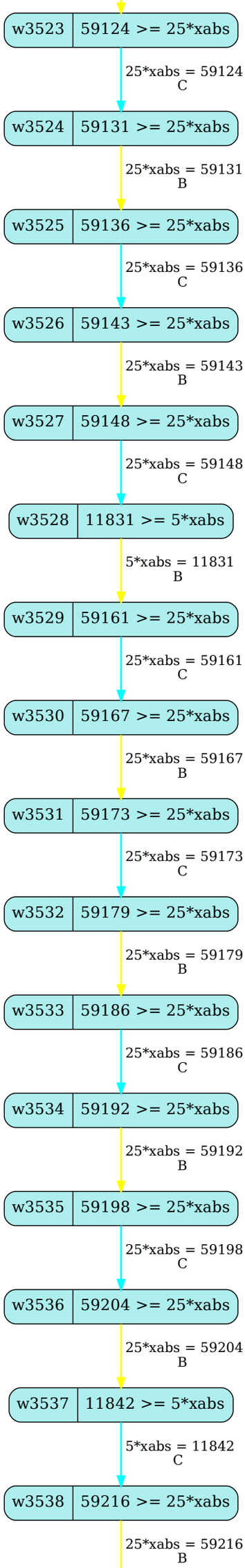
w3523
59124 >= 25*xabs
25*xabs = 59124
C
w3524
59131 >= 25*xabs
25*xabs = 59131
B
w3525
59136 >= 25*xabs
25*xabs = 59136
C
w3526
59143 >= 25*xabs
25*xabs = 59143
B
w3527
59148 >= 25*xabs
25*xabs = 59148
C
w3528
11831 >= 5*xabs
5*xabs = 11831
B
w3529
59161 >= 25*xabs
25*xabs = 59161
C
w3530
59167 >= 25*xabs
25*xabs = 59167
B
w3531
59173 >= 25*xabs
25*xabs = 59173
C
w3532
59179 >= 25*xabs
25*xabs = 59179
B
w3533
59186 >= 25*xabs
25*xabs = 59186
C
w3534
59192 >= 25*xabs
25*xabs = 59192
B
w3535
59198 >= 25*xabs
25*xabs = 59198
C
w3536
59204 >= 25*xabs
25*xabs = 59204
B
w3537
11842 >= 5*xabs
5*xabs = 11842
C
w3538
59216 >= 25*xabs
25*xabs = 59216
B

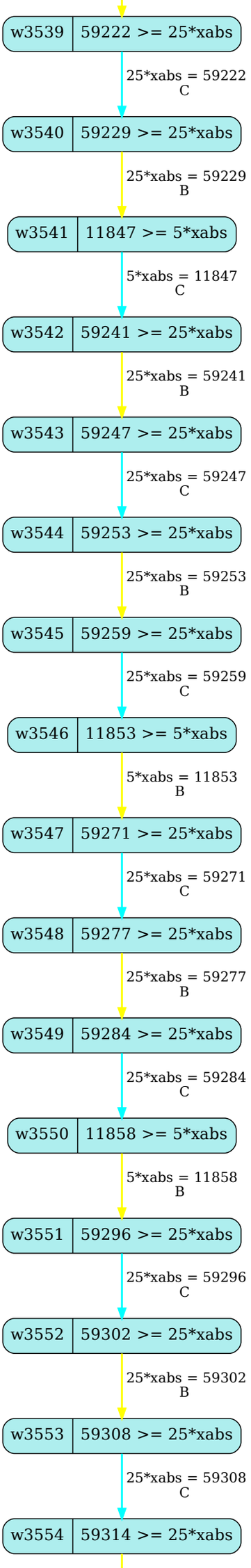
w3539
59222 >= 25*xabs
25*xabs = 59222
C
w3540
59229 >= 25*xabs
25*xabs = 59229
B
w3541
11847 >= 5*xabs
5*xabs = 11847
C
w3542
59241 >= 25*xabs
25*xabs = 59241
B
w3543
59247 >= 25*xabs
25*xabs = 59247
C
w3544
59253 >= 25*xabs
25*xabs = 59253
B
w3545
59259 >= 25*xabs
25*xabs = 59259
C
w3546
11853 >= 5*xabs
5*xabs = 11853
B
w3547
59271 >= 25*xabs
25*xabs = 59271
C
w3548
59277 >= 25*xabs
25*xabs = 59277
B
w3549
59284 >= 25*xabs
25*xabs = 59284
C
w3550
11858 >= 5*xabs
5*xabs = 11858
B
w3551
59296 >= 25*xabs
25*xabs = 59296
C
w3552
59302 >= 25*xabs
25*xabs = 59302
B
w3553
59308 >= 25*xabs
25*xabs = 59308
C
w3554
59314 >= 25*xabs

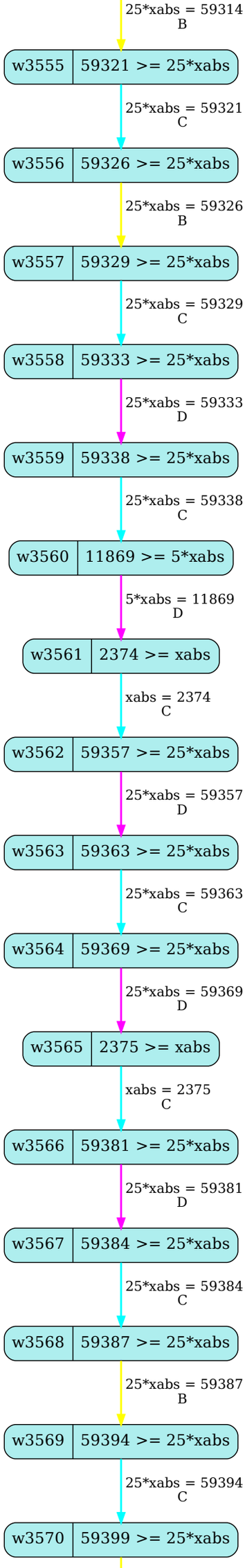
25*xabs = 59314
B
w3555
59321 >= 25*xabs
25*xabs = 59321
C
w3556
59326 >= 25*xabs
25*xabs = 59326
B
w3557
59329 >= 25*xabs
25*xabs = 59329
C
w3558
59333 >= 25*xabs
25*xabs = 59333
D
w3559
59338 >= 25*xabs
25*xabs = 59338
C
w3560
11869 >= 5*xabs
5*xabs = 11869
D
w3561
2374 >= xabs
xabs = 2374
C
w3562
59357 >= 25*xabs
25*xabs = 59357
D
w3563
59363 >= 25*xabs
25*xabs = 59363
C
w3564
59369 >= 25*xabs
25*xabs = 59369
D
w3565
2375 >= xabs
xabs = 2375
C
w3566
59381 >= 25*xabs
25*xabs = 59381
D
w3567
59384 >= 25*xabs
25*xabs = 59384
C
w3568
59387 >= 25*xabs
25*xabs = 59387
B
w3569
59394 >= 25*xabs
25*xabs = 59394
C
w3570
59399 >= 25*xabs

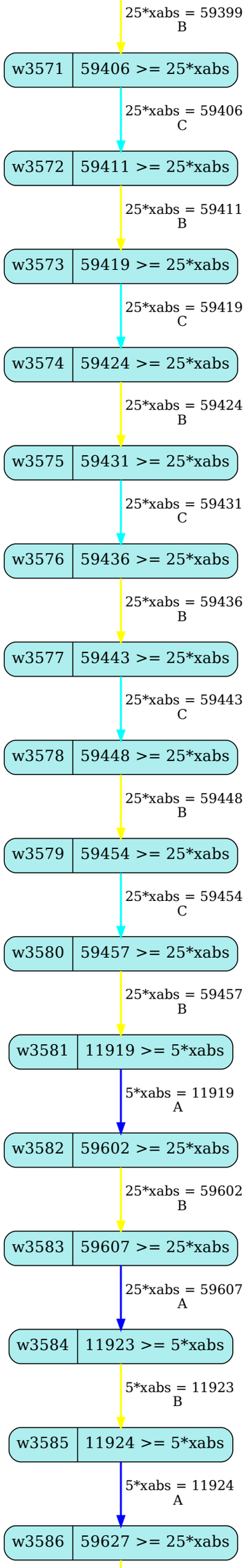
25*xabs = 59399
B
w3571
59406 >= 25*xabs
25*xabs = 59406
C
w3572
59411 >= 25*xabs
25*xabs = 59411
B
w3573
59419 >= 25*xabs
25*xabs = 59419
C
w3574
59424 >= 25*xabs
25*xabs = 59424
B
w3575
59431 >= 25*xabs
25*xabs = 59431
C
w3576
59436 >= 25*xabs
25*xabs = 59436
B
w3577
59443 >= 25*xabs
25*xabs = 59443
C
w3578
59448 >= 25*xabs
25*xabs = 59448
B
w3579
59454 >= 25*xabs
25*xabs = 59454
C
w3580
59457 >= 25*xabs
25*xabs = 59457
B
w3581
11919 >= 5*xabs
5*xabs = 11919
A
w3582
59602 >= 25*xabs
25*xabs = 59602
B
w3583
59607 >= 25*xabs
25*xabs = 59607
A
w3584
11923 >= 5*xabs
5*xabs = 11923
B
w3585
11924 >= 5*xabs
5*xabs = 11924
A
w3586
59627 >= 25*xabs

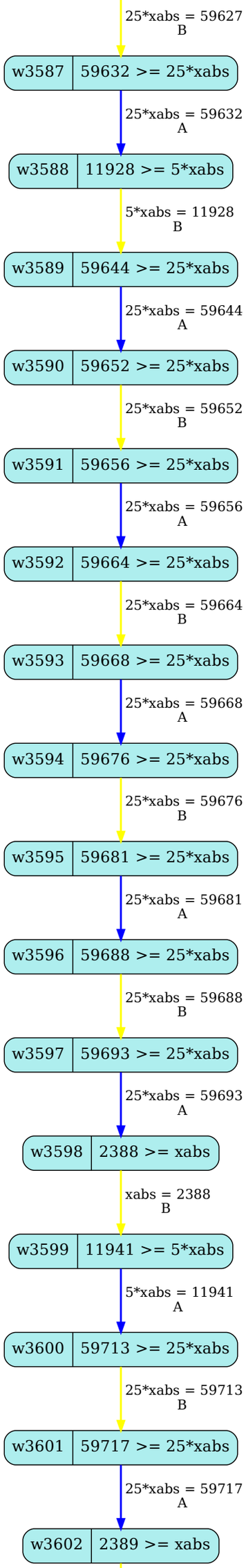
25*xabs = 59627
B
w3587
59632 >= 25*xabs
25*xabs = 59632
A
w3588
11928 >= 5*xabs
5*xabs = 11928
B
w3589
59644 >= 25*xabs
25*xabs = 59644
A
w3590
59652 >= 25*xabs
25*xabs = 59652
B
w3591
59656 >= 25*xabs
25*xabs = 59656
A
w3592
59664 >= 25*xabs
25*xabs = 59664
B
w3593
59668 >= 25*xabs
25*xabs = 59668
A
w3594
59676 >= 25*xabs
25*xabs = 59676
B
w3595
59681 >= 25*xabs
25*xabs = 59681
A
w3596
59688 >= 25*xabs
25*xabs = 59688
B
w3597
59693 >= 25*xabs
25*xabs = 59693
A
w3598
2388 >= xabs
xabs = 2388
B
w3599
11941 >= 5*xabs
5*xabs = 11941
A
w3600
59713 >= 25*xabs
25*xabs = 59713
B
w3601
59717 >= 25*xabs
25*xabs = 59717
A
w3602
2389 >= xabs

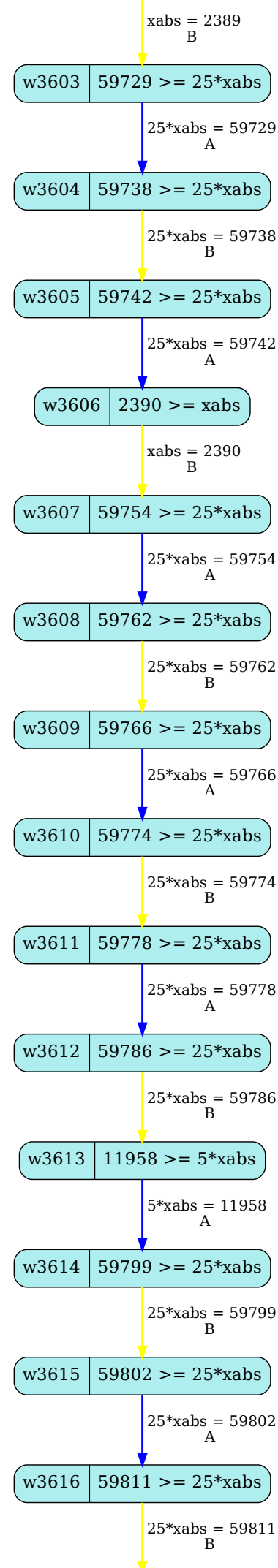
xabs = 2389
B
w3603
59729 >= 25*xabs
25*xabs = 59729
A
w3604
59738 >= 25*xabs
25*xabs = 59738
B
w3605
59742 >= 25*xabs
25*xabs = 59742
A
w3606
2390 >= xabs
xabs = 2390
B
w3607
59754 >= 25*xabs
25*xabs = 59754
A
w3608
59762 >= 25*xabs
25*xabs = 59762
B
w3609
59766 >= 25*xabs
25*xabs = 59766
A
w3610
59774 >= 25*xabs
25*xabs = 59774
B
w3611
59778 >= 25*xabs
25*xabs = 59778
A
w3612
59786 >= 25*xabs
25*xabs = 59786
B
w3613
11958 >= 5*xabs
5*xabs = 11958
A
w3614
59799 >= 25*xabs
25*xabs = 59799
B
w3615
59802 >= 25*xabs
25*xabs = 59802
A
w3616
59811 >= 25*xabs
25*xabs = 59811
B

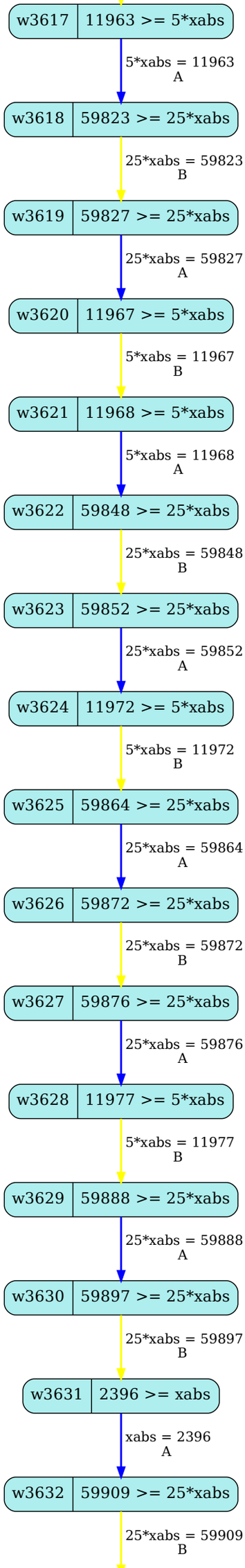
w3617
11963 >= 5*xabs
5*xabs = 11963
A
w3618
59823 >= 25*xabs
25*xabs = 59823
B
w3619
59827 >= 25*xabs
25*xabs = 59827
A
w3620
11967 >= 5*xabs
5*xabs = 11967
B
w3621
11968 >= 5*xabs
5*xabs = 11968
A
w3622
59848 >= 25*xabs
25*xabs = 59848
B
w3623
59852 >= 25*xabs
25*xabs = 59852
A
w3624
11972 >= 5*xabs
5*xabs = 11972
B
w3625
59864 >= 25*xabs
25*xabs = 59864
A
w3626
59872 >= 25*xabs
25*xabs = 59872
B
w3627
59876 >= 25*xabs
25*xabs = 59876
A
w3628
11977 >= 5*xabs
5*xabs = 11977
B
w3629
59888 >= 25*xabs
25*xabs = 59888
A
w3630
59897 >= 25*xabs
25*xabs = 59897
B
w3631
2396 >= xabs
xabs = 2396
A
w3632
59909 >= 25*xabs
25*xabs = 59909
B

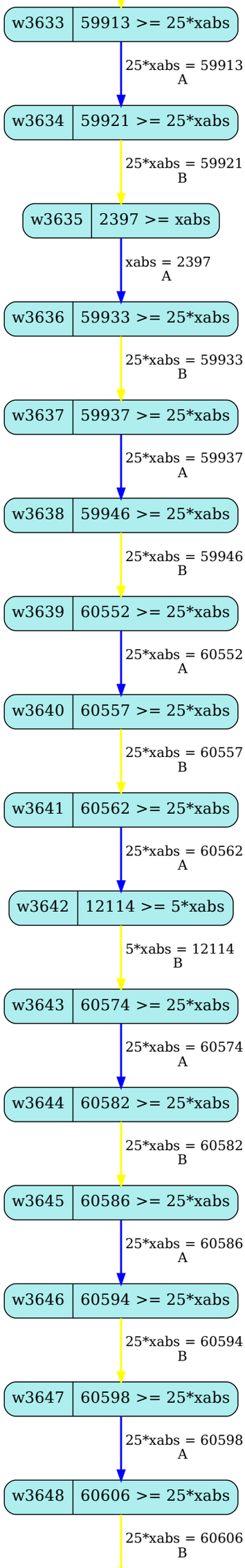
w3633
59913 >= 25*xabs
25*xabs = 59913
A
w3634
59921 >= 25*xabs
25*xabs = 59921
B
w3635
2397 >= xabs
xabs = 2397
A
w3636
59933 >= 25*xabs
25*xabs = 59933
B
w3637
59937 >= 25*xabs
25*xabs = 59937
A
w3638
59946 >= 25*xabs
25*xabs = 59946
B
w3639
60552 >= 25*xabs
25*xabs = 60552
A
w3640
60557 >= 25*xabs
25*xabs = 60557
B
w3641
60562 >= 25*xabs
25*xabs = 60562
A
w3642
12114 >= 5*xabs
5*xabs = 12114
B
w3643
60574 >= 25*xabs
25*xabs = 60574
A
w3644
60582 >= 25*xabs
25*xabs = 60582
B
w3645
60586 >= 25*xabs
25*xabs = 60586
A
w3646
60594 >= 25*xabs
25*xabs = 60594
B
w3647
60598 >= 25*xabs
25*xabs = 60598
A
w3648
60606 >= 25*xabs
25*xabs = 60606
B

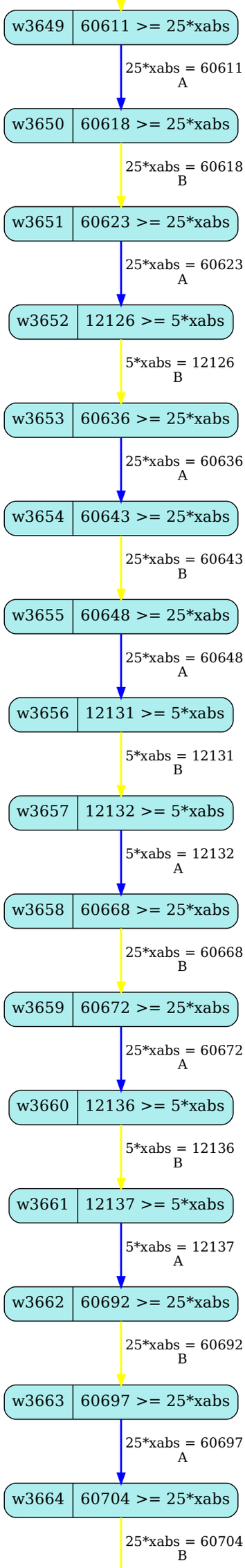
w3649
60611 >= 25*xabs
25*xabs = 60611
A
w3650
60618 >= 25*xabs
25*xabs = 60618
B
w3651
60623 >= 25*xabs
25*xabs = 60623
A
w3652
12126 >= 5*xabs
5*xabs = 12126
B
w3653
60636 >= 25*xabs
25*xabs = 60636
A
w3654
60643 >= 25*xabs
25*xabs = 60643
B
w3655
60648 >= 25*xabs
25*xabs = 60648
A
w3656
12131 >= 5*xabs
5*xabs = 12131
B
w3657
12132 >= 5*xabs
5*xabs = 12132
A
w3658
60668 >= 25*xabs
25*xabs = 60668
B
w3659
60672 >= 25*xabs
25*xabs = 60672
A
w3660
12136 >= 5*xabs
5*xabs = 12136
B
w3661
12137 >= 5*xabs
5*xabs = 12137
A
w3662
60692 >= 25*xabs
25*xabs = 60692
B
w3663
60697 >= 25*xabs
25*xabs = 60697
A
w3664
60704 >= 25*xabs
25*xabs = 60704
B

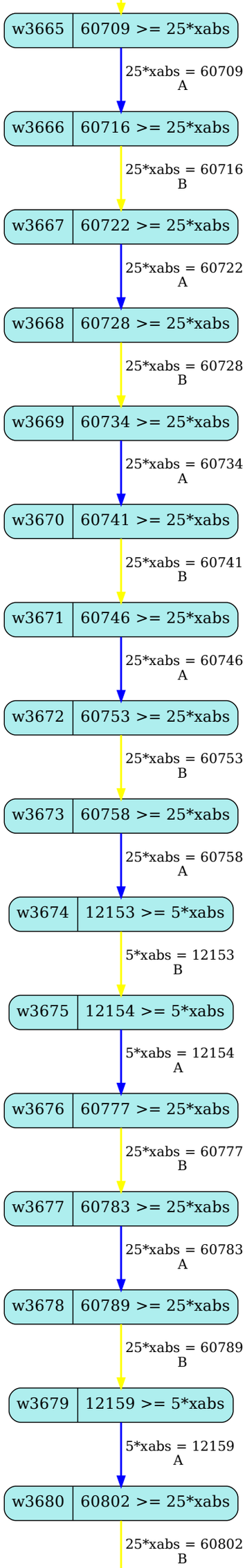
w3665
60709 >= 25*xabs
25*xabs = 60709
A
w3666
60716 >= 25*xabs
25*xabs = 60716
B
w3667
60722 >= 25*xabs
25*xabs = 60722
A
w3668
60728 >= 25*xabs
25*xabs = 60728
B
w3669
60734 >= 25*xabs
25*xabs = 60734
A
w3670
60741 >= 25*xabs
25*xabs = 60741
B
w3671
60746 >= 25*xabs
25*xabs = 60746
A
w3672
60753 >= 25*xabs
25*xabs = 60753
B
w3673
60758 >= 25*xabs
25*xabs = 60758
A
w3674
12153 >= 5*xabs
5*xabs = 12153
B
w3675
12154 >= 5*xabs
5*xabs = 12154
A
w3676
60777 >= 25*xabs
25*xabs = 60777
B
w3677
60783 >= 25*xabs
25*xabs = 60783
A
w3678
60789 >= 25*xabs
25*xabs = 60789
B
w3679
12159 >= 5*xabs
5*xabs = 12159
A
w3680
60802 >= 25*xabs
25*xabs = 60802
B

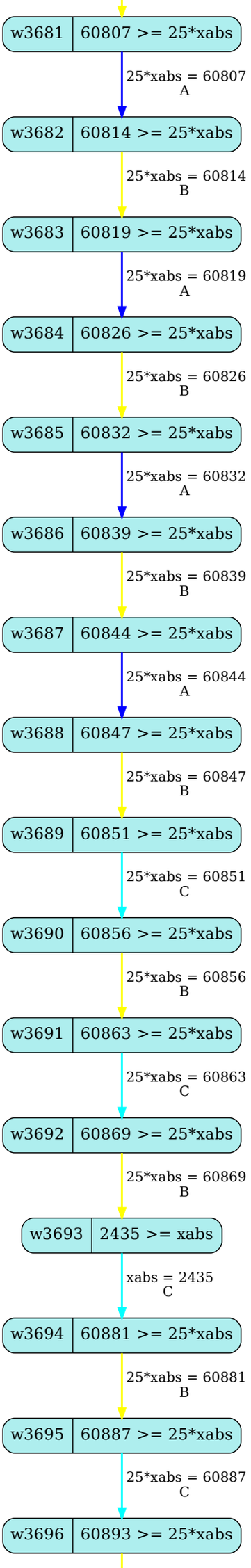
w3681
60807 >= 25*xabs
25*xabs = 60807
A
w3682
60814 >= 25*xabs
25*xabs = 60814
B
w3683
60819 >= 25*xabs
25*xabs = 60819
A
w3684
60826 >= 25*xabs
25*xabs = 60826
B
w3685
60832 >= 25*xabs
25*xabs = 60832
A
w3686
60839 >= 25*xabs
25*xabs = 60839
B
w3687
60844 >= 25*xabs
25*xabs = 60844
A
w3688
60847 >= 25*xabs
25*xabs = 60847
B
w3689
60851 >= 25*xabs
25*xabs = 60851
C
w3690
60856 >= 25*xabs
25*xabs = 60856
B
w3691
60863 >= 25*xabs
25*xabs = 60863
C
w3692
60869 >= 25*xabs
25*xabs = 60869
B
w3693
2435 >= xabs
xabs = 2435
C
w3694
60881 >= 25*xabs
25*xabs = 60881
B
w3695
60887 >= 25*xabs
25*xabs = 60887
C
w3696
60893 >= 25*xabs

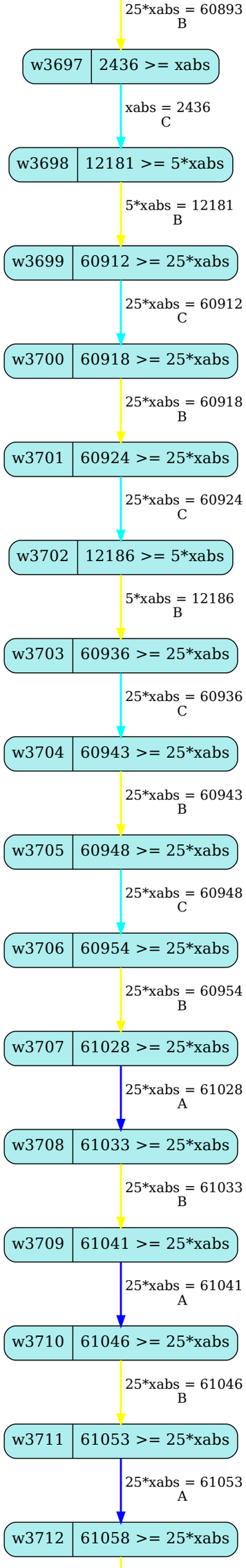
25*xabs = 60893
B
w3697
2436 >= xabs
xabs = 2436
C
w3698
12181 >= 5*xabs
5*xabs = 12181
B
w3699
60912 >= 25*xabs
25*xabs = 60912
C
w3700
60918 >= 25*xabs
25*xabs = 60918
B
w3701
60924 >= 25*xabs
25*xabs = 60924
C
w3702
12186 >= 5*xabs
5*xabs = 12186
B
w3703
60936 >= 25*xabs
25*xabs = 60936
C
w3704
60943 >= 25*xabs
25*xabs = 60943
B
w3705
60948 >= 25*xabs
25*xabs = 60948
C
w3706
60954 >= 25*xabs
25*xabs = 60954
B
w3707
61028 >= 25*xabs
25*xabs = 61028
A
w3708
61033 >= 25*xabs
25*xabs = 61033
B
w3709
61041 >= 25*xabs
25*xabs = 61041
A
w3710
61046 >= 25*xabs
25*xabs = 61046
B
w3711
61053 >= 25*xabs
25*xabs = 61053
A
w3712
61058 >= 25*xabs

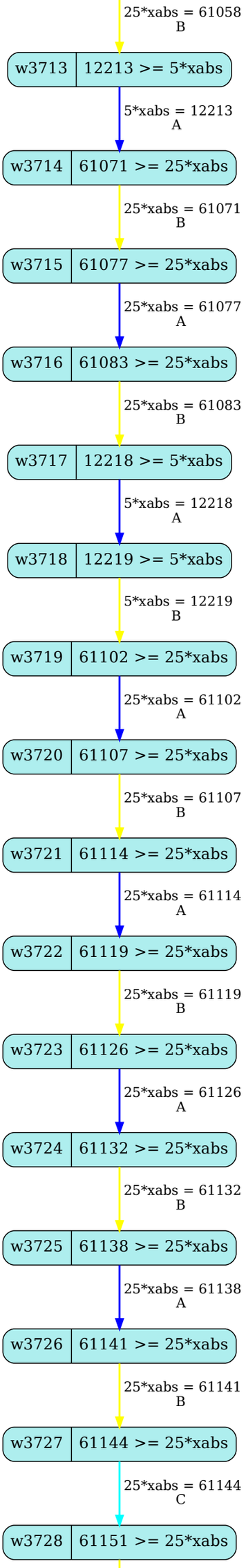
25*xabs = 61058
B
w3713
12213 >= 5*xabs
5*xabs = 12213
A
w3714
61071 >= 25*xabs
25*xabs = 61071
B
w3715
61077 >= 25*xabs
25*xabs = 61077
A
w3716
61083 >= 25*xabs
25*xabs = 61083
B
w3717
12218 >= 5*xabs
5*xabs = 12218
A
w3718
12219 >= 5*xabs
5*xabs = 12219
B
w3719
61102 >= 25*xabs
25*xabs = 61102
A
w3720
61107 >= 25*xabs
25*xabs = 61107
B
w3721
61114 >= 25*xabs
25*xabs = 61114
A
w3722
61119 >= 25*xabs
25*xabs = 61119
B
w3723
61126 >= 25*xabs
25*xabs = 61126
A
w3724
61132 >= 25*xabs
25*xabs = 61132
B
w3725
61138 >= 25*xabs
25*xabs = 61138
A
w3726
61141 >= 25*xabs
25*xabs = 61141
B
w3727
61144 >= 25*xabs
25*xabs = 61144
C
w3728
61151 >= 25*xabs

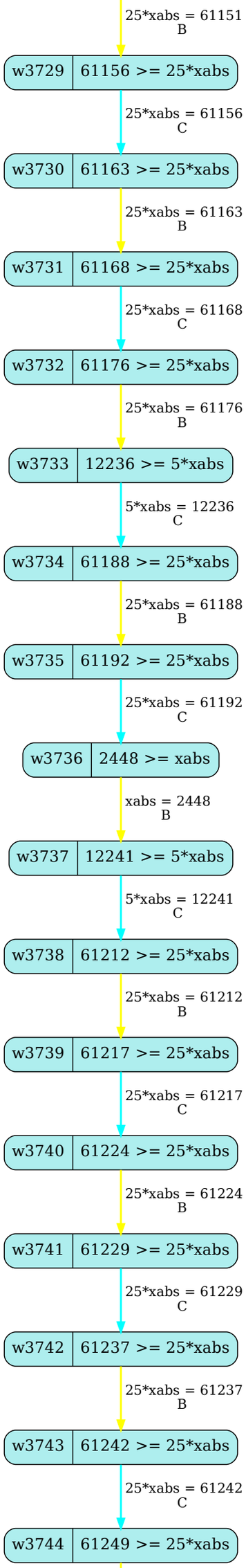
25*xabs = 61151
B
w3729
61156 >= 25*xabs
25*xabs = 61156
C
w3730
61163 >= 25*xabs
25*xabs = 61163
B
w3731
61168 >= 25*xabs
25*xabs = 61168
C
w3732
61176 >= 25*xabs
25*xabs = 61176
B
w3733
12236 >= 5*xabs
5*xabs = 12236
C
w3734
61188 >= 25*xabs
25*xabs = 61188
B
w3735
61192 >= 25*xabs
25*xabs = 61192
C
w3736
2448 >= xabs
xabs = 2448
B
w3737
12241 >= 5*xabs
5*xabs = 12241
C
w3738
61212 >= 25*xabs
25*xabs = 61212
B
w3739
61217 >= 25*xabs
25*xabs = 61217
C
w3740
61224 >= 25*xabs
25*xabs = 61224
B
w3741
61229 >= 25*xabs
25*xabs = 61229
C
w3742
61237 >= 25*xabs
25*xabs = 61237
B
w3743
61242 >= 25*xabs
25*xabs = 61242
C
w3744
61249 >= 25*xabs

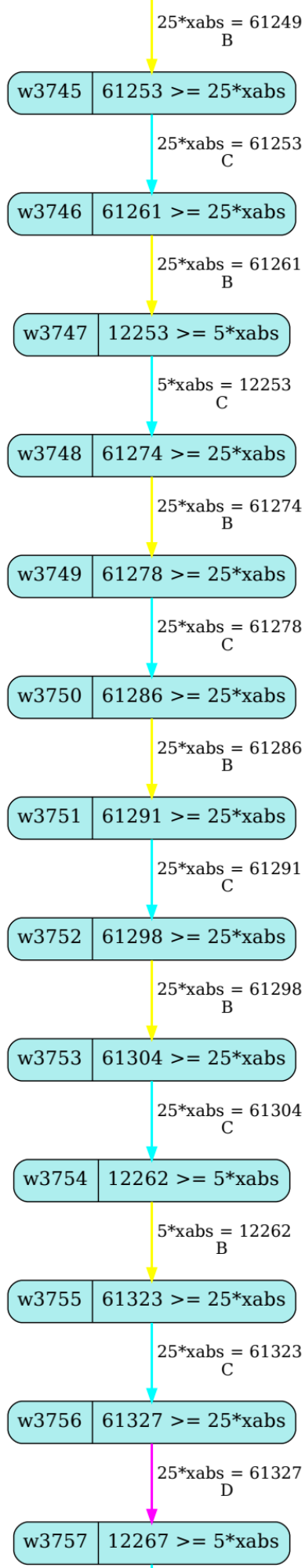
25*xabs = 61249
B
w3745
61253 >= 25*xabs
25*xabs = 61253
C
w3746
61261 >= 25*xabs
25*xabs = 61261
B
w3747
12253 >= 5*xabs
5*xabs = 12253
C
w3748
61274 >= 25*xabs
25*xabs = 61274
B
w3749
61278 >= 25*xabs
25*xabs = 61278
C
w3750
61286 >= 25*xabs
25*xabs = 61286
B
w3751
61291 >= 25*xabs
25*xabs = 61291
C
w3752
61298 >= 25*xabs
25*xabs = 61298
B
w3753
61304 >= 25*xabs
25*xabs = 61304
C
w3754
12262 >= 5*xabs
5*xabs = 12262
B
w3755
61323 >= 25*xabs
25*xabs = 61323
C
w3756
61327 >= 25*xabs
25*xabs = 61327
D
w3757
12267 >= 5*xabs

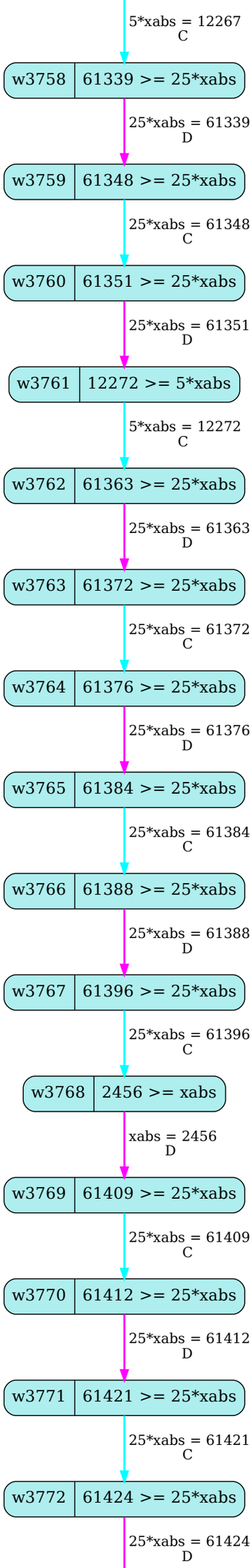
5*xabs = 12267
C
w3758
61339 >= 25*xabs
25*xabs = 61339
D
w3759
61348 >= 25*xabs
25*xabs = 61348
C
w3760
61351 >= 25*xabs
25*xabs = 61351
D
w3761
12272 >= 5*xabs
5*xabs = 12272
C
w3762
61363 >= 25*xabs
25*xabs = 61363
D
w3763
61372 >= 25*xabs
25*xabs = 61372
C
w3764
61376 >= 25*xabs
25*xabs = 61376
D
w3765
61384 >= 25*xabs
25*xabs = 61384
C
w3766
61388 >= 25*xabs
25*xabs = 61388
D
w3767
61396 >= 25*xabs
25*xabs = 61396
C
w3768
2456 >= xabs
xabs = 2456
D
w3769
61409 >= 25*xabs
25*xabs = 61409
C
w3770
61412 >= 25*xabs
25*xabs = 61412
D
w3771
61421 >= 25*xabs
25*xabs = 61421
C
w3772
61424 >= 25*xabs
25*xabs = 61424
D

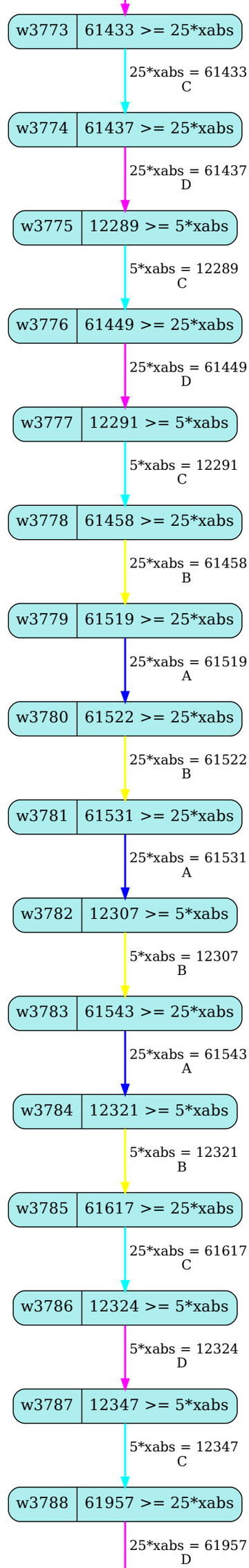
w3773
61433 >= 25*xabs
25*xabs = 61433
C
w3774
61437 >= 25*xabs
25*xabs = 61437
D
w3775
12289 >= 5*xabs
5*xabs = 12289
C
w3776
61449 >= 25*xabs
25*xabs = 61449
D
w3777
12291 >= 5*xabs
5*xabs = 12291
C
w3778
61458 >= 25*xabs
25*xabs = 61458
B
w3779
61519 >= 25*xabs
25*xabs = 61519
A
w3780
61522 >= 25*xabs
25*xabs = 61522
B
w3781
61531 >= 25*xabs
25*xabs = 61531
A
w3782
12307 >= 5*xabs
5*xabs = 12307
B
w3783
61543 >= 25*xabs
25*xabs = 61543
A
w3784
12321 >= 5*xabs
5*xabs = 12321
B
w3785
61617 >= 25*xabs
25*xabs = 61617
C
w3786
12324 >= 5*xabs
5*xabs = 12324
D
w3787
12347 >= 5*xabs
5*xabs = 12347
C
w3788
61957 >= 25*xabs
25*xabs = 61957
D

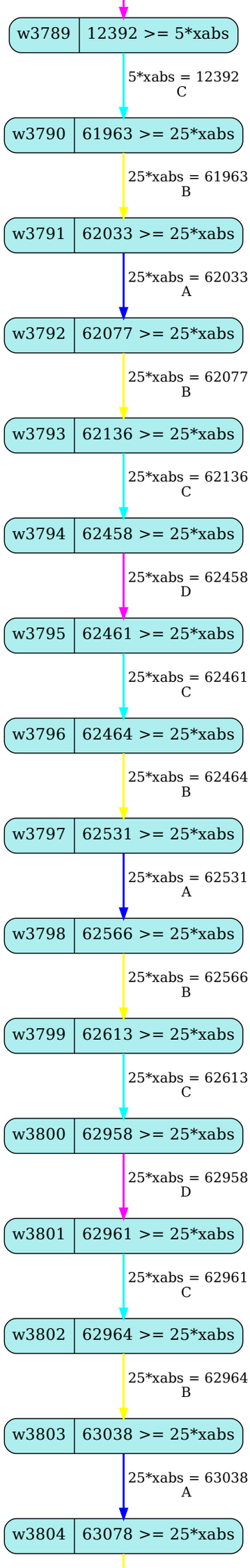
w3789
12392 >= 5*xabs
5*xabs = 12392
C
w3790
61963 >= 25*xabs
25*xabs = 61963
B
w3791
62033 >= 25*xabs
25*xabs = 62033
A
w3792
62077 >= 25*xabs
25*xabs = 62077
B
w3793
62136 >= 25*xabs
25*xabs = 62136
C
w3794
62458 >= 25*xabs
25*xabs = 62458
D
w3795
62461 >= 25*xabs
25*xabs = 62461
C
w3796
62464 >= 25*xabs
25*xabs = 62464
B
w3797
62531 >= 25*xabs
25*xabs = 62531
A
w3798
62566 >= 25*xabs
25*xabs = 62566
B
w3799
62613 >= 25*xabs
25*xabs = 62613
C
w3800
62958 >= 25*xabs
25*xabs = 62958
D
w3801
62961 >= 25*xabs
25*xabs = 62961
C
w3802
62964 >= 25*xabs
25*xabs = 62964
B
w3803
63038 >= 25*xabs
25*xabs = 63038
A
w3804
63078 >= 25*xabs

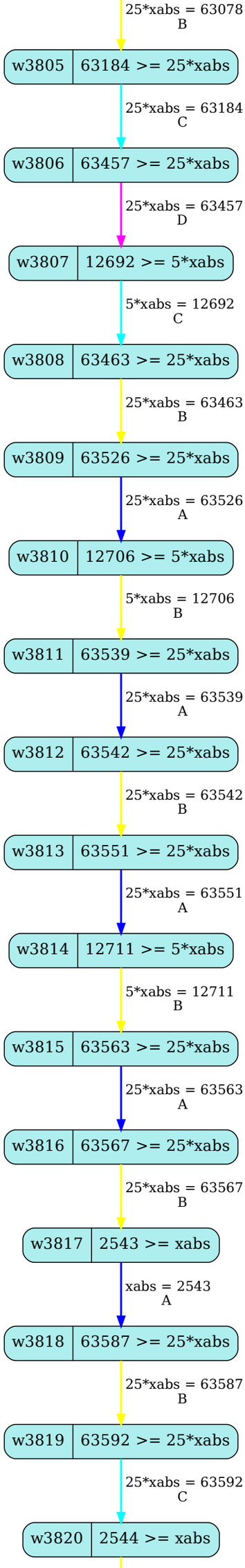
25*xabs = 63078
B
w3805
63184 >= 25*xabs
25*xabs = 63184
C
w3806
63457 >= 25*xabs
25*xabs = 63457
D
w3807
12692 >= 5*xabs
5*xabs = 12692
C
w3808
63463 >= 25*xabs
25*xabs = 63463
B
w3809
63526 >= 25*xabs
25*xabs = 63526
A
w3810
12706 >= 5*xabs
5*xabs = 12706
B
w3811
63539 >= 25*xabs
25*xabs = 63539
A
w3812
63542 >= 25*xabs
25*xabs = 63542
B
w3813
63551 >= 25*xabs
25*xabs = 63551
A
w3814
12711 >= 5*xabs
5*xabs = 12711
B
w3815
63563 >= 25*xabs
25*xabs = 63563
A
w3816
63567 >= 25*xabs
25*xabs = 63567
B
w3817
2543 >= xabs
xabs = 2543
A
w3818
63587 >= 25*xabs
25*xabs = 63587
B
w3819
63592 >= 25*xabs
25*xabs = 63592
C
w3820
2544 >= xabs

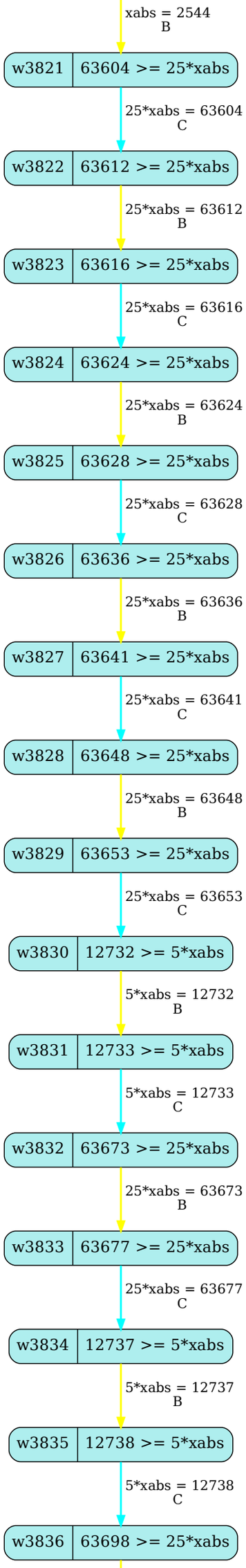
xabs = 2544
B
w3821
63604 >= 25*xabs
25*xabs = 63604
C
w3822
63612 >= 25*xabs
25*xabs = 63612
B
w3823
63616 >= 25*xabs
25*xabs = 63616
C
w3824
63624 >= 25*xabs
25*xabs = 63624
B
w3825
63628 >= 25*xabs
25*xabs = 63628
C
w3826
63636 >= 25*xabs
25*xabs = 63636
B
w3827
63641 >= 25*xabs
25*xabs = 63641
C
w3828
63648 >= 25*xabs
25*xabs = 63648
B
w3829
63653 >= 25*xabs
25*xabs = 63653
C
w3830
12732 >= 5*xabs
5*xabs = 12732
B
w3831
12733 >= 5*xabs
5*xabs = 12733
C
w3832
63673 >= 25*xabs
25*xabs = 63673
B
w3833
63677 >= 25*xabs
25*xabs = 63677
C
w3834
12737 >= 5*xabs
5*xabs = 12737
B
w3835
12738 >= 5*xabs
5*xabs = 12738
C
w3836
63698 >= 25*xabs

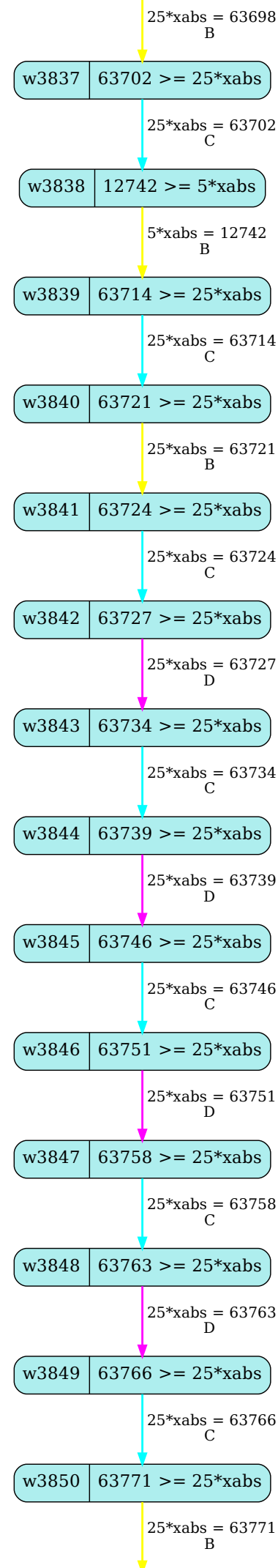
25*xabs = 63698
B
w3837
63702 >= 25*xabs
25*xabs = 63702
C
w3838
12742 >= 5*xabs
5*xabs = 12742
B
w3839
63714 >= 25*xabs
25*xabs = 63714
C
w3840
63721 >= 25*xabs
25*xabs = 63721
B
w3841
63724 >= 25*xabs
25*xabs = 63724
C
w3842
63727 >= 25*xabs
25*xabs = 63727
D
w3843
63734 >= 25*xabs
25*xabs = 63734
C
w3844
63739 >= 25*xabs
25*xabs = 63739
D
w3845
63746 >= 25*xabs
25*xabs = 63746
C
w3846
63751 >= 25*xabs
25*xabs = 63751
D
w3847
63758 >= 25*xabs
25*xabs = 63758
C
w3848
63763 >= 25*xabs
25*xabs = 63763
D
w3849
63766 >= 25*xabs
25*xabs = 63766
C
w3850
63771 >= 25*xabs
25*xabs = 63771
B

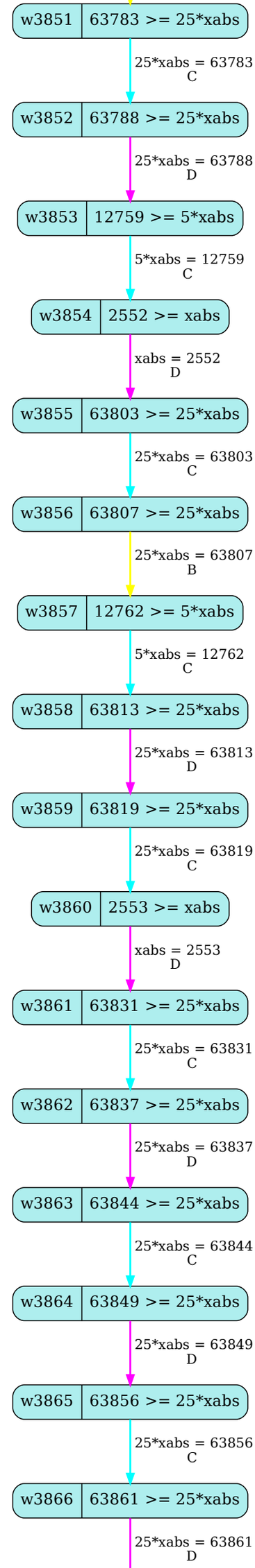
w3851
63783 >= 25*xabs
25*xabs = 63783
C
w3852
63788 >= 25*xabs
25*xabs = 63788
D
w3853
12759 >= 5*xabs
5*xabs = 12759
C
w3854
2552 >= xabs
xabs = 2552
D
w3855
63803 >= 25*xabs
25*xabs = 63803
C
w3856
63807 >= 25*xabs
25*xabs = 63807
B
w3857
12762 >= 5*xabs
5*xabs = 12762
C
w3858
63813 >= 25*xabs
25*xabs = 63813
D
w3859
63819 >= 25*xabs
25*xabs = 63819
C
w3860
2553 >= xabs
xabs = 2553
D
w3861
63831 >= 25*xabs
25*xabs = 63831
C
w3862
63837 >= 25*xabs
25*xabs = 63837
D
w3863
63844 >= 25*xabs
25*xabs = 63844
C
w3864
63849 >= 25*xabs
25*xabs = 63849
D
w3865
63856 >= 25*xabs
25*xabs = 63856
C
w3866
63861 >= 25*xabs
25*xabs = 63861
D

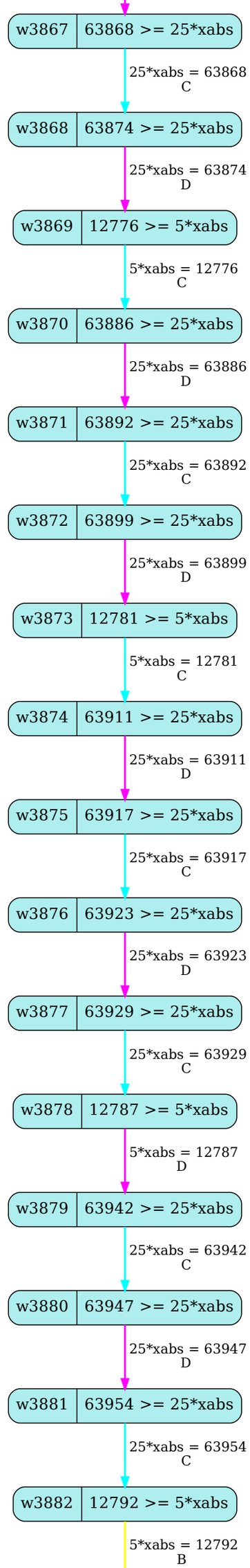
w3867
63868 >= 25*xabs
25*xabs = 63868
C
w3868
63874 >= 25*xabs
25*xabs = 63874
D
w3869
12776 >= 5*xabs
5*xabs = 12776
C
w3870
63886 >= 25*xabs
25*xabs = 63886
D
w3871
63892 >= 25*xabs
25*xabs = 63892
C
w3872
63899 >= 25*xabs
25*xabs = 63899
D
w3873
12781 >= 5*xabs
5*xabs = 12781
C
w3874
63911 >= 25*xabs
25*xabs = 63911
D
w3875
63917 >= 25*xabs
25*xabs = 63917
C
w3876
63923 >= 25*xabs
25*xabs = 63923
D
w3877
63929 >= 25*xabs
25*xabs = 63929
C
w3878
12787 >= 5*xabs
5*xabs = 12787
D
w3879
63942 >= 25*xabs
25*xabs = 63942
C
w3880
63947 >= 25*xabs
25*xabs = 63947
D
w3881
63954 >= 25*xabs
25*xabs = 63954
C
w3882
12792 >= 5*xabs
5*xabs = 12792
B

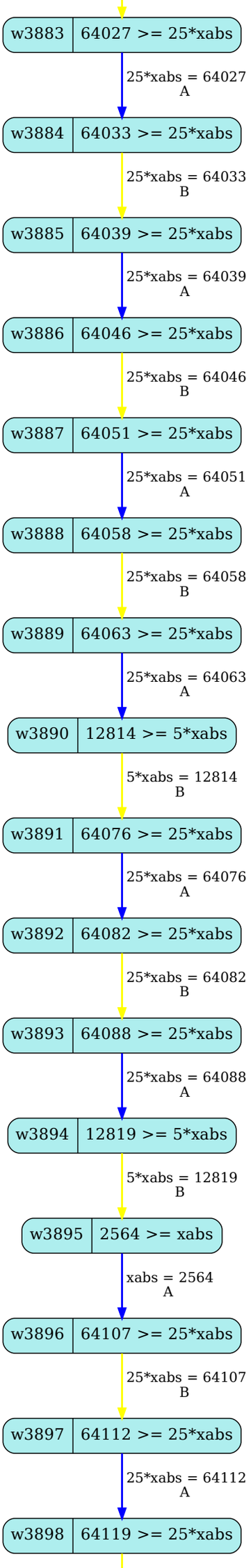
w3883
64027 >= 25*xabs
25*xabs = 64027
A
w3884
64033 >= 25*xabs
25*xabs = 64033
B
w3885
64039 >= 25*xabs
25*xabs = 64039
A
w3886
64046 >= 25*xabs
25*xabs = 64046
B
w3887
64051 >= 25*xabs
25*xabs = 64051
A
w3888
64058 >= 25*xabs
25*xabs = 64058
B
w3889
64063 >= 25*xabs
25*xabs = 64063
A
w3890
12814 >= 5*xabs
5*xabs = 12814
B
w3891
64076 >= 25*xabs
25*xabs = 64076
A
w3892
64082 >= 25*xabs
25*xabs = 64082
B
w3893
64088 >= 25*xabs
25*xabs = 64088
A
w3894
12819 >= 5*xabs
5*xabs = 12819
B
w3895
2564 >= xabs
xabs = 2564
A
w3896
64107 >= 25*xabs
25*xabs = 64107
B
w3897
64112 >= 25*xabs
25*xabs = 64112
A
w3898
64119 >= 25*xabs

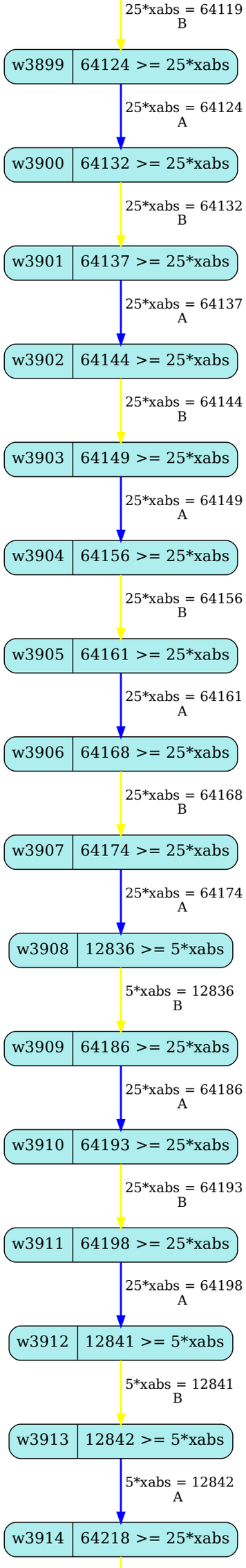
25*xabs = 64119
B
w3899
64124 >= 25*xabs
25*xabs = 64124
A
w3900
64132 >= 25*xabs
25*xabs = 64132
B
w3901
64137 >= 25*xabs
25*xabs = 64137
A
w3902
64144 >= 25*xabs
25*xabs = 64144
B
w3903
64149 >= 25*xabs
25*xabs = 64149
A
w3904
64156 >= 25*xabs
25*xabs = 64156
B
w3905
64161 >= 25*xabs
25*xabs = 64161
A
w3906
64168 >= 25*xabs
25*xabs = 64168
B
w3907
64174 >= 25*xabs
25*xabs = 64174
A
w3908
12836 >= 5*xabs
5*xabs = 12836
B
w3909
64186 >= 25*xabs
25*xabs = 64186
A
w3910
64193 >= 25*xabs
25*xabs = 64193
B
w3911
64198 >= 25*xabs
25*xabs = 64198
A
w3912
12841 >= 5*xabs
5*xabs = 12841
B
w3913
12842 >= 5*xabs
5*xabs = 12842
A
w3914
64218 >= 25*xabs

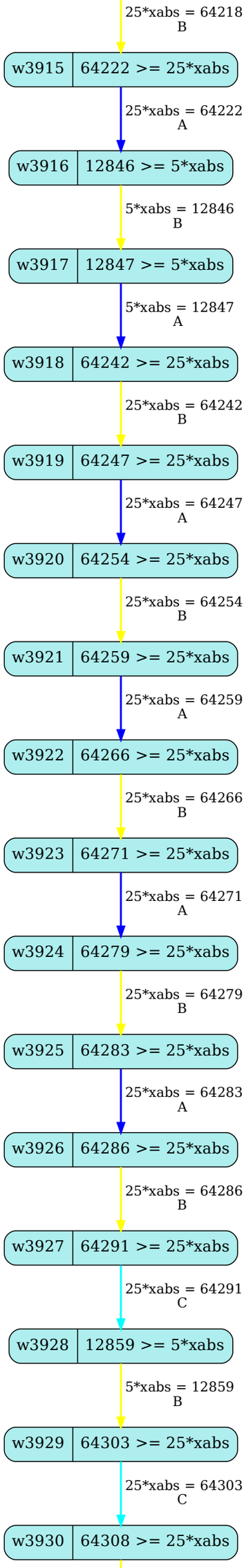
25*xabs = 64218
B
w3915
64222 >= 25*xabs
25*xabs = 64222
A
w3916
12846 >= 5*xabs
5*xabs = 12846
B
w3917
12847 >= 5*xabs
5*xabs = 12847
A
w3918
64242 >= 25*xabs
25*xabs = 64242
B
w3919
64247 >= 25*xabs
25*xabs = 64247
A
w3920
64254 >= 25*xabs
25*xabs = 64254
B
w3921
64259 >= 25*xabs
25*xabs = 64259
A
w3922
64266 >= 25*xabs
25*xabs = 64266
B
w3923
64271 >= 25*xabs
25*xabs = 64271
A
w3924
64279 >= 25*xabs
25*xabs = 64279
B
w3925
64283 >= 25*xabs
25*xabs = 64283
A
w3926
64286 >= 25*xabs
25*xabs = 64286
B
w3927
64291 >= 25*xabs
25*xabs = 64291
C
w3928
12859 >= 5*xabs
5*xabs = 12859
B
w3929
64303 >= 25*xabs
25*xabs = 64303
C
w3930
64308 >= 25*xabs

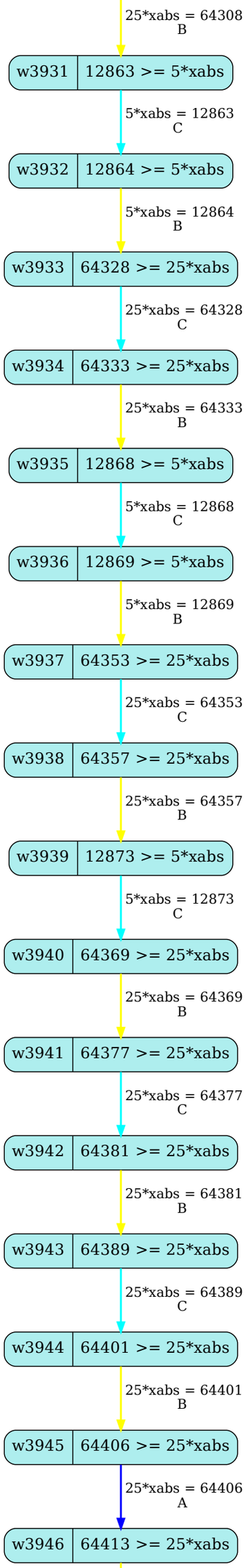
25*xabs = 64308
B
w3931
12863 >= 5*xabs
5*xabs = 12863
C
w3932
12864 >= 5*xabs
5*xabs = 12864
B
w3933
64328 >= 25*xabs
25*xabs = 64328
C
w3934
64333 >= 25*xabs
25*xabs = 64333
B
w3935
12868 >= 5*xabs
5*xabs = 12868
C
w3936
12869 >= 5*xabs
5*xabs = 12869
B
w3937
64353 >= 25*xabs
25*xabs = 64353
C
w3938
64357 >= 25*xabs
25*xabs = 64357
B
w3939
12873 >= 5*xabs
5*xabs = 12873
C
w3940
64369 >= 25*xabs
25*xabs = 64369
B
w3941
64377 >= 25*xabs
25*xabs = 64377
C
w3942
64381 >= 25*xabs
25*xabs = 64381
B
w3943
64389 >= 25*xabs
25*xabs = 64389
C
w3944
64401 >= 25*xabs
25*xabs = 64401
B
w3945
64406 >= 25*xabs
25*xabs = 64406
A
w3946
64413 >= 25*xabs

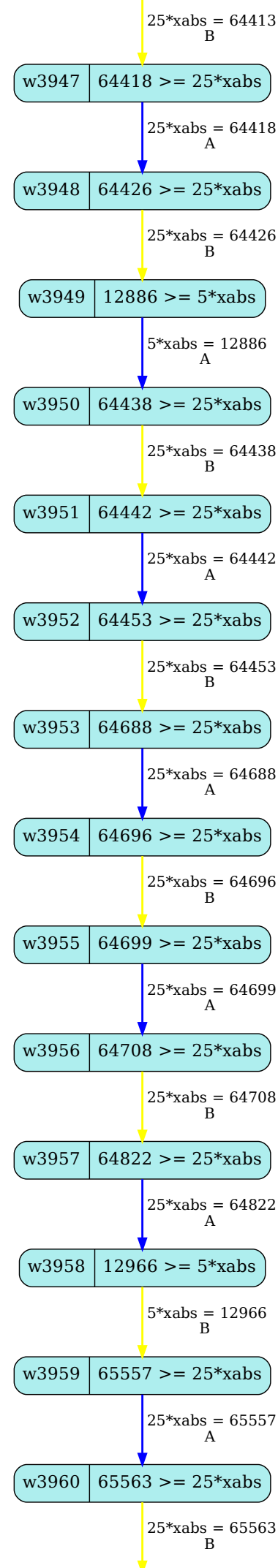
25*xabs = 64413
B
w3947
64418 >= 25*xabs
25*xabs = 64418
A
w3948
64426 >= 25*xabs
25*xabs = 64426
B
w3949
12886 >= 5*xabs
5*xabs = 12886
A
w3950
64438 >= 25*xabs
25*xabs = 64438
B
w3951
64442 >= 25*xabs
25*xabs = 64442
A
w3952
64453 >= 25*xabs
25*xabs = 64453
B
w3953
64688 >= 25*xabs
25*xabs = 64688
A
w3954
64696 >= 25*xabs
25*xabs = 64696
B
w3955
64699 >= 25*xabs
25*xabs = 64699
A
w3956
64708 >= 25*xabs
25*xabs = 64708
B
w3957
64822 >= 25*xabs
25*xabs = 64822
A
w3958
12966 >= 5*xabs
5*xabs = 12966
B
w3959
65557 >= 25*xabs
25*xabs = 65557
A
w3960
65563 >= 25*xabs
25*xabs = 65563
B

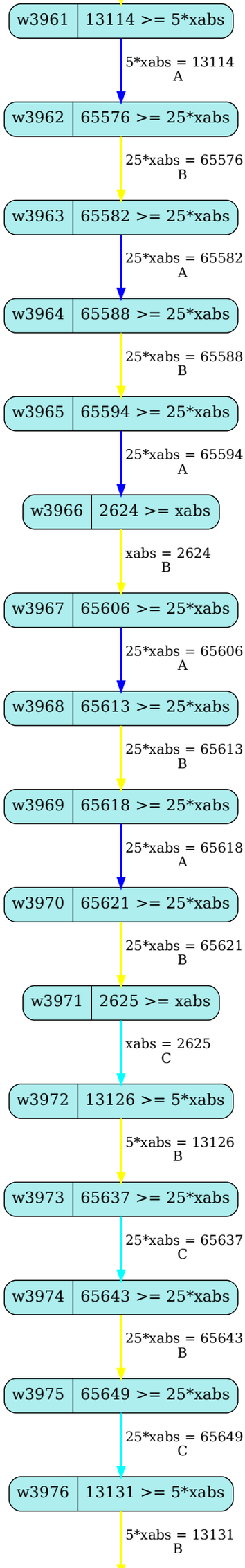
w3961
13114 >= 5*xabs
5*xabs = 13114
A
w3962
65576 >= 25*xabs
25*xabs = 65576
B
w3963
65582 >= 25*xabs
25*xabs = 65582
A
w3964
65588 >= 25*xabs
25*xabs = 65588
B
w3965
65594 >= 25*xabs
25*xabs = 65594
A
w3966
2624 >= xabs
xabs = 2624
B
w3967
65606 >= 25*xabs
25*xabs = 65606
A
w3968
65613 >= 25*xabs
25*xabs = 65613
B
w3969
65618 >= 25*xabs
25*xabs = 65618
A
w3970
65621 >= 25*xabs
25*xabs = 65621
B
w3971
2625 >= xabs
xabs = 2625
C
w3972
13126 >= 5*xabs
5*xabs = 13126
B
w3973
65637 >= 25*xabs
25*xabs = 65637
C
w3974
65643 >= 25*xabs
25*xabs = 65643
B
w3975
65649 >= 25*xabs
25*xabs = 65649
C
w3976
13131 >= 5*xabs
5*xabs = 13131
B

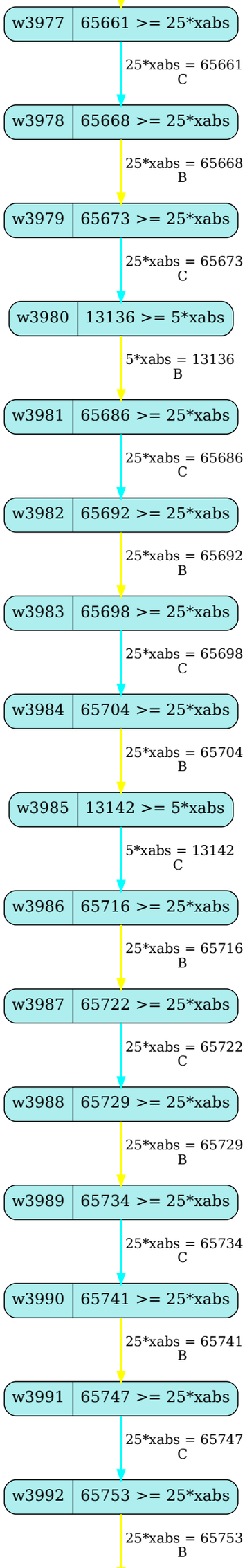
w3977
65661 >= 25*xabs
25*xabs = 65661
C
w3978
65668 >= 25*xabs
25*xabs = 65668
B
w3979
65673 >= 25*xabs
25*xabs = 65673
C
w3980
13136 >= 5*xabs
5*xabs = 13136
B
w3981
65686 >= 25*xabs
25*xabs = 65686
C
w3982
65692 >= 25*xabs
25*xabs = 65692
B
w3983
65698 >= 25*xabs
25*xabs = 65698
C
w3984
65704 >= 25*xabs
25*xabs = 65704
B
w3985
13142 >= 5*xabs
5*xabs = 13142
C
w3986
65716 >= 25*xabs
25*xabs = 65716
B
w3987
65722 >= 25*xabs
25*xabs = 65722
C
w3988
65729 >= 25*xabs
25*xabs = 65729
B
w3989
65734 >= 25*xabs
25*xabs = 65734
C
w3990
65741 >= 25*xabs
25*xabs = 65741
B
w3991
65747 >= 25*xabs
25*xabs = 65747
C
w3992
65753 >= 25*xabs
25*xabs = 65753
B

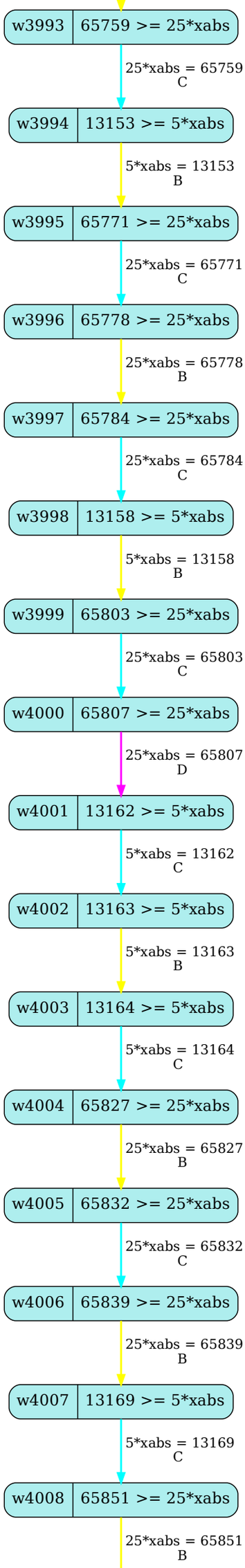
w3993
65759 >= 25*xabs
25*xabs = 65759
C
w3994
13153 >= 5*xabs
5*xabs = 13153
B
w3995
65771 >= 25*xabs
25*xabs = 65771
C
w3996
65778 >= 25*xabs
25*xabs = 65778
B
w3997
65784 >= 25*xabs
25*xabs = 65784
C
w3998
13158 >= 5*xabs
5*xabs = 13158
B
w3999
65803 >= 25*xabs
25*xabs = 65803
C
w4000
65807 >= 25*xabs
25*xabs = 65807
D
w4001
13162 >= 5*xabs
5*xabs = 13162
C
w4002
13163 >= 5*xabs
5*xabs = 13163
B
w4003
13164 >= 5*xabs
5*xabs = 13164
C
w4004
65827 >= 25*xabs
25*xabs = 65827
B
w4005
65832 >= 25*xabs
25*xabs = 65832
C
w4006
65839 >= 25*xabs
25*xabs = 65839
B
w4007
13169 >= 5*xabs
5*xabs = 13169
C
w4008
65851 >= 25*xabs
25*xabs = 65851
B

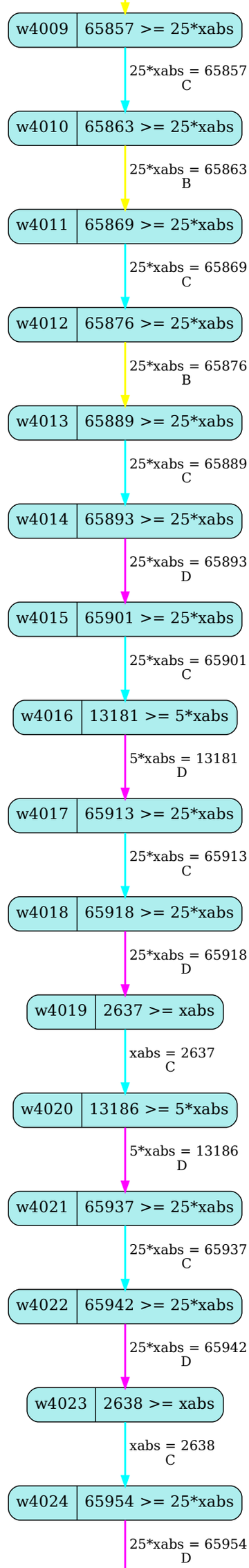
w4009
65857 >= 25*xabs
25*xabs = 65857
C
w4010
65863 >= 25*xabs
25*xabs = 65863
B
w4011
65869 >= 25*xabs
25*xabs = 65869
C
w4012
65876 >= 25*xabs
25*xabs = 65876
B
w4013
65889 >= 25*xabs
25*xabs = 65889
C
w4014
65893 >= 25*xabs
25*xabs = 65893
D
w4015
65901 >= 25*xabs
25*xabs = 65901
C
w4016
13181 >= 5*xabs
5*xabs = 13181
D
w4017
65913 >= 25*xabs
25*xabs = 65913
C
w4018
65918 >= 25*xabs
25*xabs = 65918
D
w4019
2637 >= xabs
xabs = 2637
C
w4020
13186 >= 5*xabs
5*xabs = 13186
D
w4021
65937 >= 25*xabs
25*xabs = 65937
C
w4022
65942 >= 25*xabs
25*xabs = 65942
D
w4023
2638 >= xabs
xabs = 2638
C
w4024
65954 >= 25*xabs
25*xabs = 65954
D

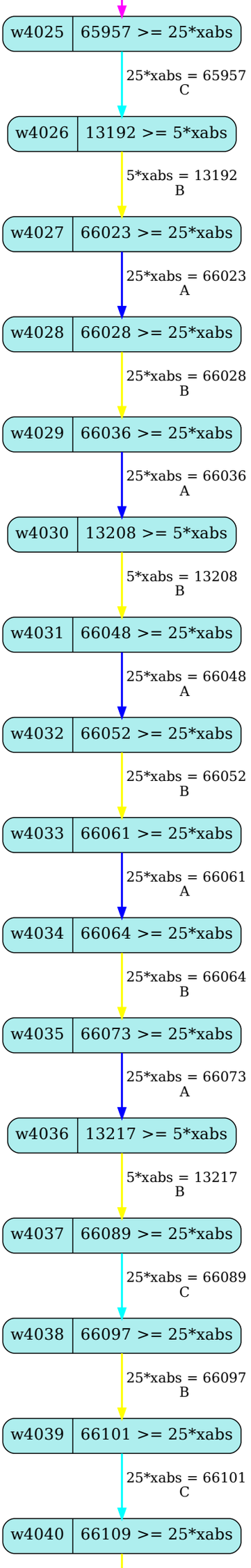
w4025
65957 >= 25*xabs
25*xabs = 65957
C
w4026
13192 >= 5*xabs
5*xabs = 13192
B
w4027
66023 >= 25*xabs
25*xabs = 66023
A
w4028
66028 >= 25*xabs
25*xabs = 66028
B
w4029
66036 >= 25*xabs
25*xabs = 66036
A
w4030
13208 >= 5*xabs
5*xabs = 13208
B
w4031
66048 >= 25*xabs
25*xabs = 66048
A
w4032
66052 >= 25*xabs
25*xabs = 66052
B
w4033
66061 >= 25*xabs
25*xabs = 66061
A
w4034
66064 >= 25*xabs
25*xabs = 66064
B
w4035
66073 >= 25*xabs
25*xabs = 66073
A
w4036
13217 >= 5*xabs
5*xabs = 13217
B
w4037
66089 >= 25*xabs
25*xabs = 66089
C
w4038
66097 >= 25*xabs
25*xabs = 66097
B
w4039
66101 >= 25*xabs
25*xabs = 66101
C
w4040
66109 >= 25*xabs

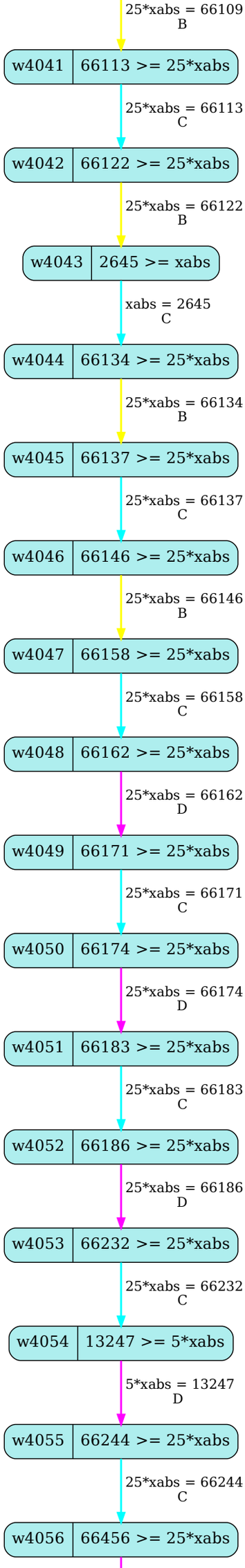
25*xabs = 66109
B
w4041
66113 >= 25*xabs
25*xabs = 66113
C
w4042
66122 >= 25*xabs
25*xabs = 66122
B
w4043
2645 >= xabs
xabs = 2645
C
w4044
66134 >= 25*xabs
25*xabs = 66134
B
w4045
66137 >= 25*xabs
25*xabs = 66137
C
w4046
66146 >= 25*xabs
25*xabs = 66146
B
w4047
66158 >= 25*xabs
25*xabs = 66158
C
w4048
66162 >= 25*xabs
25*xabs = 66162
D
w4049
66171 >= 25*xabs
25*xabs = 66171
C
w4050
66174 >= 25*xabs
25*xabs = 66174
D
w4051
66183 >= 25*xabs
25*xabs = 66183
C
w4052
66186 >= 25*xabs
25*xabs = 66186
D
w4053
66232 >= 25*xabs
25*xabs = 66232
C
w4054
13247 >= 5*xabs
5*xabs = 13247
D
w4055
66244 >= 25*xabs
25*xabs = 66244
C
w4056
66456 >= 25*xabs

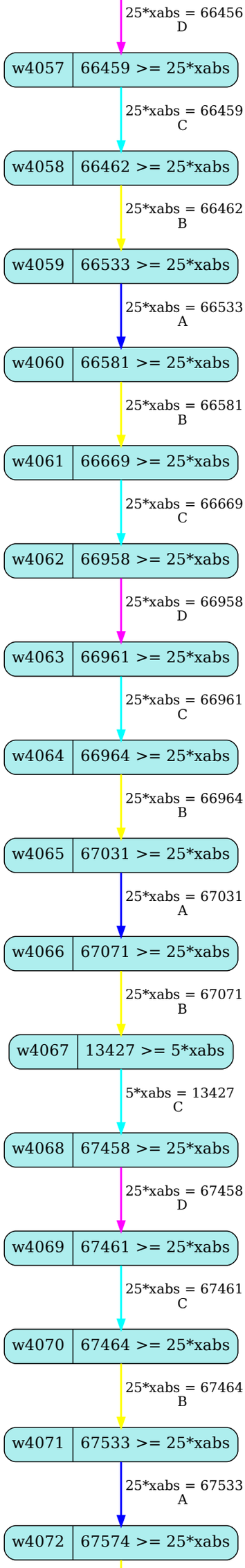
25*xabs = 66456
D
w4057
66459 >= 25*xabs
25*xabs = 66459
C
w4058
66462 >= 25*xabs
25*xabs = 66462
B
w4059
66533 >= 25*xabs
25*xabs = 66533
A
w4060
66581 >= 25*xabs
25*xabs = 66581
B
w4061
66669 >= 25*xabs
25*xabs = 66669
C
w4062
66958 >= 25*xabs
25*xabs = 66958
D
w4063
66961 >= 25*xabs
25*xabs = 66961
C
w4064
66964 >= 25*xabs
25*xabs = 66964
B
w4065
67031 >= 25*xabs
25*xabs = 67031
A
w4066
67071 >= 25*xabs
25*xabs = 67071
B
w4067
13427 >= 5*xabs
5*xabs = 13427
C
w4068
67458 >= 25*xabs
25*xabs = 67458
D
w4069
67461 >= 25*xabs
25*xabs = 67461
C
w4070
67464 >= 25*xabs
25*xabs = 67464
B
w4071
67533 >= 25*xabs
25*xabs = 67533
A
w4072
67574 >= 25*xabs

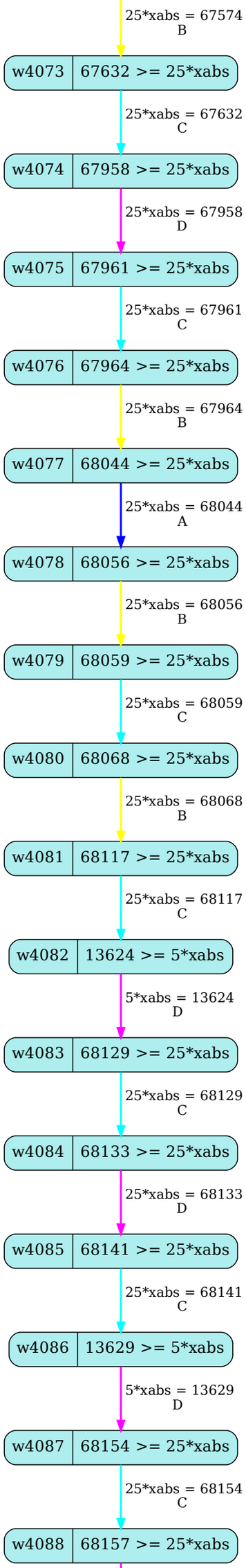
25*xabs = 67574
B
w4073
67632 >= 25*xabs
25*xabs = 67632
C
w4074
67958 >= 25*xabs
25*xabs = 67958
D
w4075
67961 >= 25*xabs
25*xabs = 67961
C
w4076
67964 >= 25*xabs
25*xabs = 67964
B
w4077
68044 >= 25*xabs
25*xabs = 68044
A
w4078
68056 >= 25*xabs
25*xabs = 68056
B
w4079
68059 >= 25*xabs
25*xabs = 68059
C
w4080
68068 >= 25*xabs
25*xabs = 68068
B
w4081
68117 >= 25*xabs
25*xabs = 68117
C
w4082
13624 >= 5*xabs
5*xabs = 13624
D
w4083
68129 >= 25*xabs
25*xabs = 68129
C
w4084
68133 >= 25*xabs
25*xabs = 68133
D
w4085
68141 >= 25*xabs
25*xabs = 68141
C
w4086
13629 >= 5*xabs
5*xabs = 13629
D
w4087
68154 >= 25*xabs
25*xabs = 68154
C
w4088
68157 >= 25*xabs

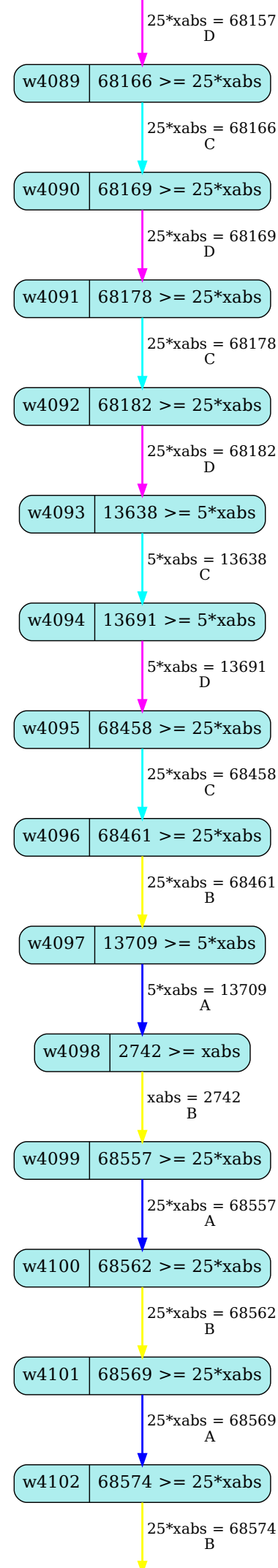
25*xabs = 68157
D
w4089
68166 >= 25*xabs
25*xabs = 68166
C
w4090
68169 >= 25*xabs
25*xabs = 68169
D
w4091
68178 >= 25*xabs
25*xabs = 68178
C
w4092
68182 >= 25*xabs
25*xabs = 68182
D
w4093
13638 >= 5*xabs
5*xabs = 13638
C
w4094
13691 >= 5*xabs
5*xabs = 13691
D
w4095
68458 >= 25*xabs
25*xabs = 68458
C
w4096
68461 >= 25*xabs
25*xabs = 68461
B
w4097
13709 >= 5*xabs
5*xabs = 13709
A
w4098
2742 >= xabs
xabs = 2742
B
w4099
68557 >= 25*xabs
25*xabs = 68557
A
w4100
68562 >= 25*xabs
25*xabs = 68562
B
w4101
68569 >= 25*xabs
25*xabs = 68569
A
w4102
68574 >= 25*xabs
25*xabs = 68574
B

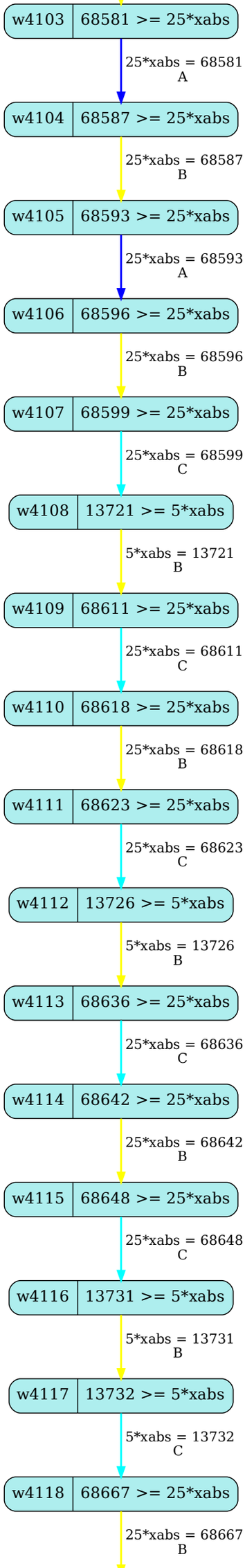
w4103
68581 >= 25*xabs
25*xabs = 68581
A
w4104
68587 >= 25*xabs
25*xabs = 68587
B
w4105
68593 >= 25*xabs
25*xabs = 68593
A
w4106
68596 >= 25*xabs
25*xabs = 68596
B
w4107
68599 >= 25*xabs
25*xabs = 68599
C
w4108
13721 >= 5*xabs
5*xabs = 13721
B
w4109
68611 >= 25*xabs
25*xabs = 68611
C
w4110
68618 >= 25*xabs
25*xabs = 68618
B
w4111
68623 >= 25*xabs
25*xabs = 68623
C
w4112
13726 >= 5*xabs
5*xabs = 13726
B
w4113
68636 >= 25*xabs
25*xabs = 68636
C
w4114
68642 >= 25*xabs
25*xabs = 68642
B
w4115
68648 >= 25*xabs
25*xabs = 68648
C
w4116
13731 >= 5*xabs
5*xabs = 13731
B
w4117
13732 >= 5*xabs
5*xabs = 13732
C
w4118
68667 >= 25*xabs
25*xabs = 68667
B

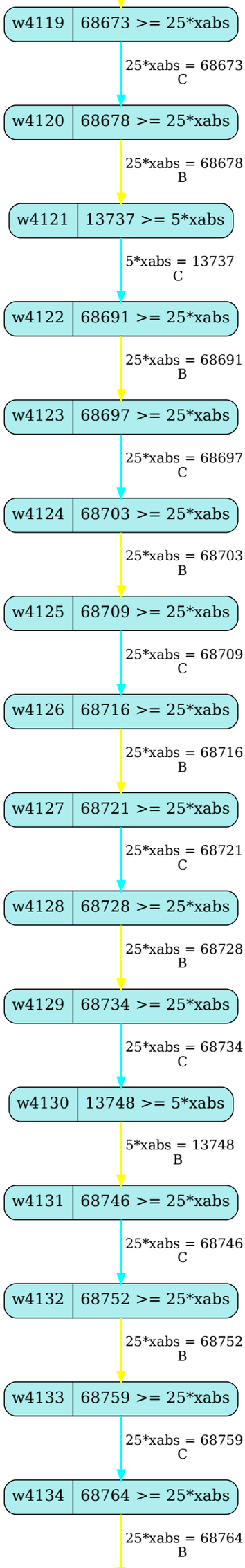
w4119
68673 >= 25*xabs
25*xabs = 68673
C
w4120
68678 >= 25*xabs
25*xabs = 68678
B
w4121
13737 >= 5*xabs
5*xabs = 13737
C
w4122
68691 >= 25*xabs
25*xabs = 68691
B
w4123
68697 >= 25*xabs
25*xabs = 68697
C
w4124
68703 >= 25*xabs
25*xabs = 68703
B
w4125
68709 >= 25*xabs
25*xabs = 68709
C
w4126
68716 >= 25*xabs
25*xabs = 68716
B
w4127
68721 >= 25*xabs
25*xabs = 68721
C
w4128
68728 >= 25*xabs
25*xabs = 68728
B
w4129
68734 >= 25*xabs
25*xabs = 68734
C
w4130
13748 >= 5*xabs
5*xabs = 13748
B
w4131
68746 >= 25*xabs
25*xabs = 68746
C
w4132
68752 >= 25*xabs
25*xabs = 68752
B
w4133
68759 >= 25*xabs
25*xabs = 68759
C
w4134
68764 >= 25*xabs
25*xabs = 68764
B

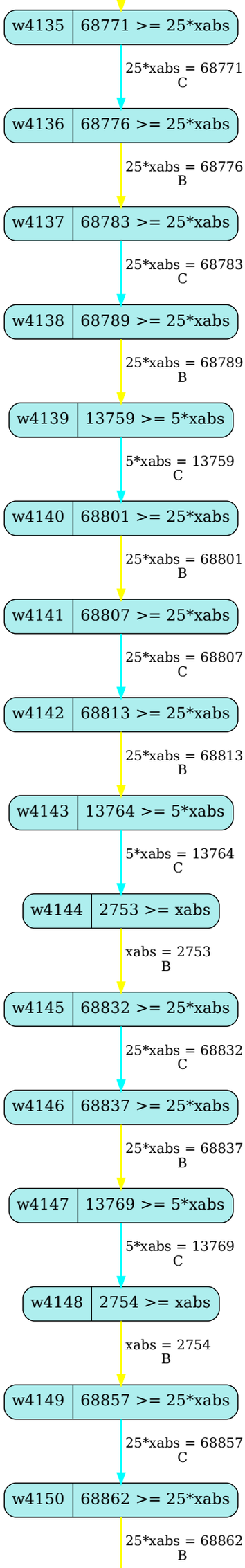
w4135
68771 >= 25*xabs
25*xabs = 68771
C
w4136
68776 >= 25*xabs
25*xabs = 68776
B
w4137
68783 >= 25*xabs
25*xabs = 68783
C
w4138
68789 >= 25*xabs
25*xabs = 68789
B
w4139
13759 >= 5*xabs
5*xabs = 13759
C
w4140
68801 >= 25*xabs
25*xabs = 68801
B
w4141
68807 >= 25*xabs
25*xabs = 68807
C
w4142
68813 >= 25*xabs
25*xabs = 68813
B
w4143
13764 >= 5*xabs
5*xabs = 13764
C
w4144
2753 >= xabs
xabs = 2753
B
w4145
68832 >= 25*xabs
25*xabs = 68832
C
w4146
68837 >= 25*xabs
25*xabs = 68837
B
w4147
13769 >= 5*xabs
5*xabs = 13769
C
w4148
2754 >= xabs
xabs = 2754
B
w4149
68857 >= 25*xabs
25*xabs = 68857
C
w4150
68862 >= 25*xabs
25*xabs = 68862
B

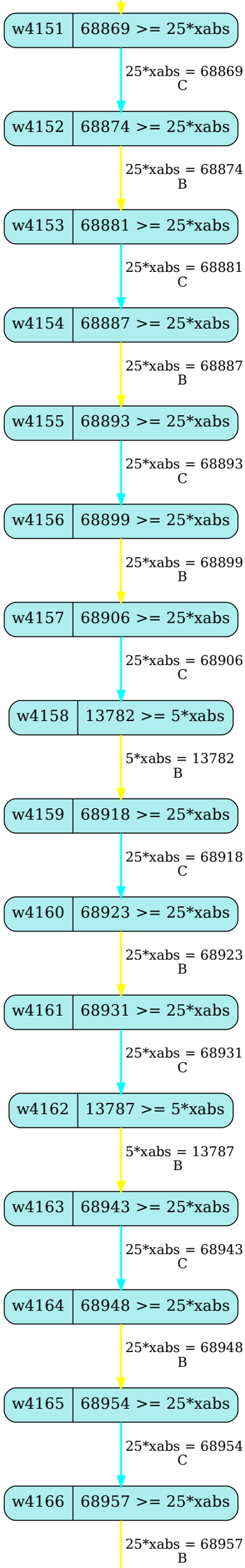
w4151
68869 >= 25*xabs
25*xabs = 68869
C
w4152
68874 >= 25*xabs
25*xabs = 68874
B
w4153
68881 >= 25*xabs
25*xabs = 68881
C
w4154
68887 >= 25*xabs
25*xabs = 68887
B
w4155
68893 >= 25*xabs
25*xabs = 68893
C
w4156
68899 >= 25*xabs
25*xabs = 68899
B
w4157
68906 >= 25*xabs
25*xabs = 68906
C
w4158
13782 >= 5*xabs
5*xabs = 13782
B
w4159
68918 >= 25*xabs
25*xabs = 68918
C
w4160
68923 >= 25*xabs
25*xabs = 68923
B
w4161
68931 >= 25*xabs
25*xabs = 68931
C
w4162
13787 >= 5*xabs
5*xabs = 13787
B
w4163
68943 >= 25*xabs
25*xabs = 68943
C
w4164
68948 >= 25*xabs
25*xabs = 68948
B
w4165
68954 >= 25*xabs
25*xabs = 68954
C
w4166
68957 >= 25*xabs
25*xabs = 68957
B

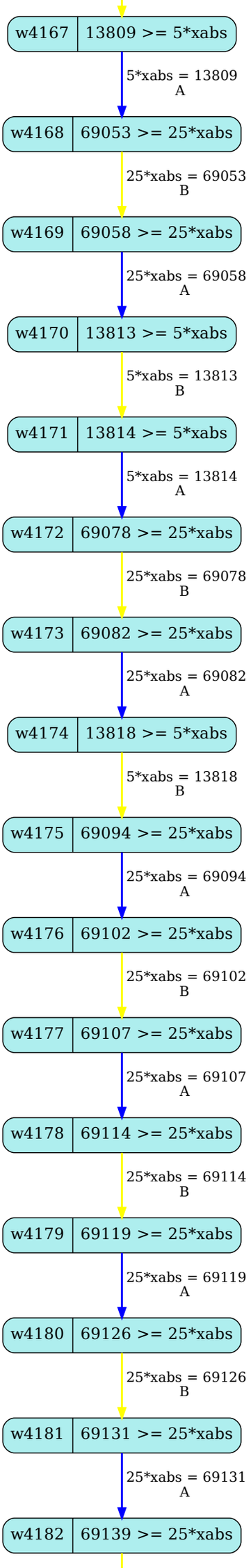
w4167
13809 >= 5*xabs
5*xabs = 13809
A
w4168
69053 >= 25*xabs
25*xabs = 69053
B
w4169
69058 >= 25*xabs
25*xabs = 69058
A
w4170
13813 >= 5*xabs
5*xabs = 13813
B
w4171
13814 >= 5*xabs
5*xabs = 13814
A
w4172
69078 >= 25*xabs
25*xabs = 69078
B
w4173
69082 >= 25*xabs
25*xabs = 69082
A
w4174
13818 >= 5*xabs
5*xabs = 13818
B
w4175
69094 >= 25*xabs
25*xabs = 69094
A
w4176
69102 >= 25*xabs
25*xabs = 69102
B
w4177
69107 >= 25*xabs
25*xabs = 69107
A
w4178
69114 >= 25*xabs
25*xabs = 69114
B
w4179
69119 >= 25*xabs
25*xabs = 69119
A
w4180
69126 >= 25*xabs
25*xabs = 69126
B
w4181
69131 >= 25*xabs
25*xabs = 69131
A
w4182
69139 >= 25*xabs

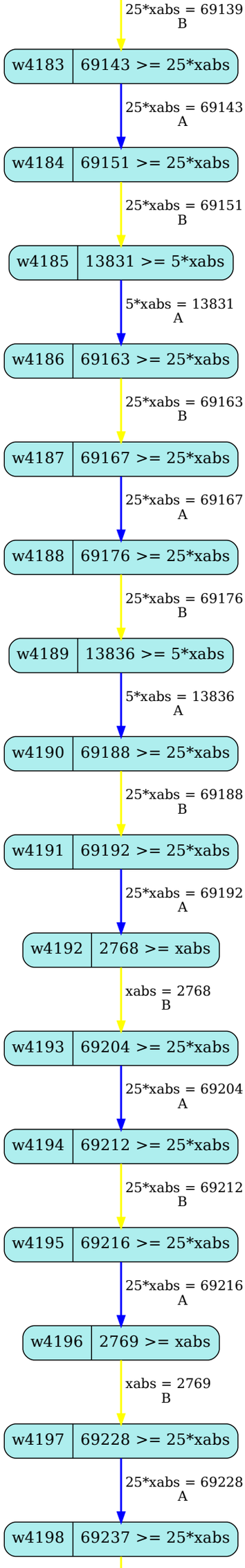
25*xabs = 69139
B
w4183
69143 >= 25*xabs
25*xabs = 69143
A
w4184
69151 >= 25*xabs
25*xabs = 69151
B
w4185
13831 >= 5*xabs
5*xabs = 13831
A
w4186
69163 >= 25*xabs
25*xabs = 69163
B
w4187
69167 >= 25*xabs
25*xabs = 69167
A
w4188
69176 >= 25*xabs
25*xabs = 69176
B
w4189
13836 >= 5*xabs
5*xabs = 13836
A
w4190
69188 >= 25*xabs
25*xabs = 69188
B
w4191
69192 >= 25*xabs
25*xabs = 69192
A
w4192
2768 >= xabs
xabs = 2768
B
w4193
69204 >= 25*xabs
25*xabs = 69204
A
w4194
69212 >= 25*xabs
25*xabs = 69212
B
w4195
69216 >= 25*xabs
25*xabs = 69216
A
w4196
2769 >= xabs
xabs = 2769
B
w4197
69228 >= 25*xabs
25*xabs = 69228
A
w4198
69237 >= 25*xabs

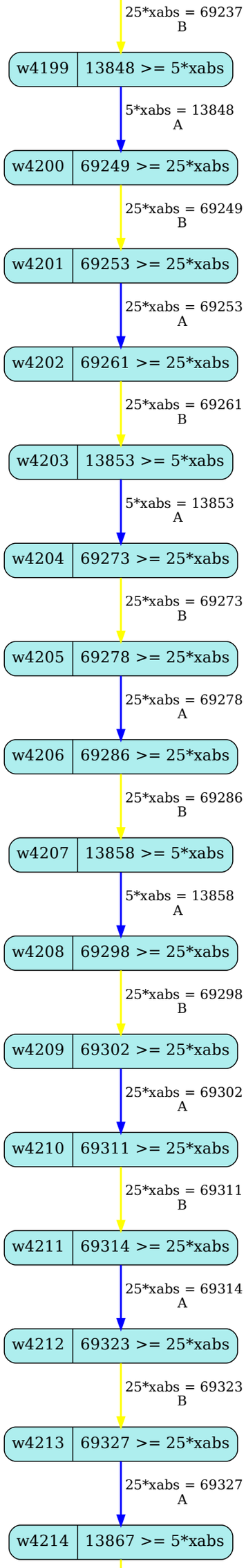
25*xabs = 69237
B
w4199
13848 >= 5*xabs
5*xabs = 13848
A
w4200
69249 >= 25*xabs
25*xabs = 69249
B
w4201
69253 >= 25*xabs
25*xabs = 69253
A
w4202
69261 >= 25*xabs
25*xabs = 69261
B
w4203
13853 >= 5*xabs
5*xabs = 13853
A
w4204
69273 >= 25*xabs
25*xabs = 69273
B
w4205
69278 >= 25*xabs
25*xabs = 69278
A
w4206
69286 >= 25*xabs
25*xabs = 69286
B
w4207
13858 >= 5*xabs
5*xabs = 13858
A
w4208
69298 >= 25*xabs
25*xabs = 69298
B
w4209
69302 >= 25*xabs
25*xabs = 69302
A
w4210
69311 >= 25*xabs
25*xabs = 69311
B
w4211
69314 >= 25*xabs
25*xabs = 69314
A
w4212
69323 >= 25*xabs
25*xabs = 69323
B
w4213
69327 >= 25*xabs
25*xabs = 69327
A
w4214
13867 >= 5*xabs

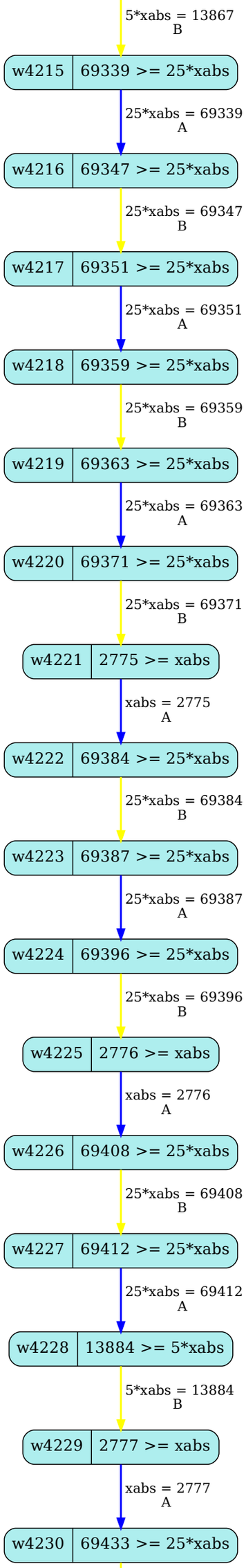
5*xabs = 13867
B
w4215
69339 >= 25*xabs
25*xabs = 69339
A
w4216
69347 >= 25*xabs
25*xabs = 69347
B
w4217
69351 >= 25*xabs
25*xabs = 69351
A
w4218
69359 >= 25*xabs
25*xabs = 69359
B
w4219
69363 >= 25*xabs
25*xabs = 69363
A
w4220
69371 >= 25*xabs
25*xabs = 69371
B
w4221
2775 >= xabs
xabs = 2775
A
w4222
69384 >= 25*xabs
25*xabs = 69384
B
w4223
69387 >= 25*xabs
25*xabs = 69387
A
w4224
69396 >= 25*xabs
25*xabs = 69396
B
w4225
2776 >= xabs
xabs = 2776
A
w4226
69408 >= 25*xabs
25*xabs = 69408
B
w4227
69412 >= 25*xabs
25*xabs = 69412
A
w4228
13884 >= 5*xabs
5*xabs = 13884
B
w4229
2777 >= xabs
xabs = 2777
A
w4230
69433 >= 25*xabs

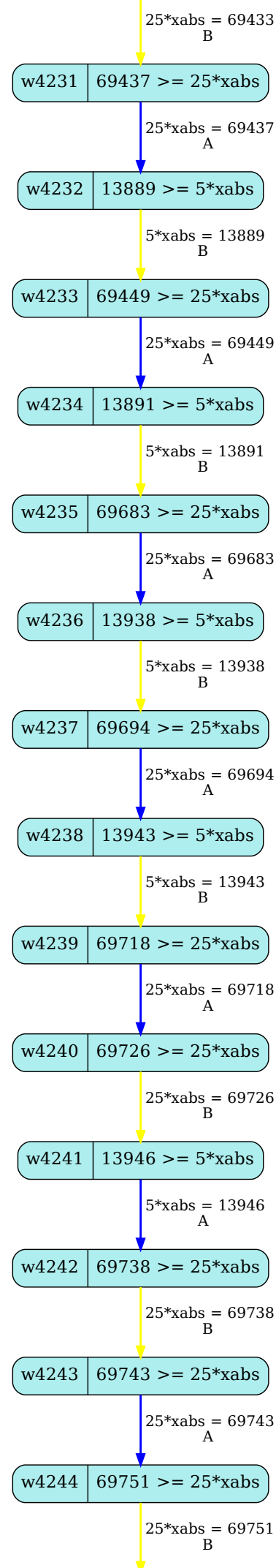
25*xabs = 69433
B
w4231
69437 >= 25*xabs
25*xabs = 69437
A
w4232
13889 >= 5*xabs
5*xabs = 13889
B
w4233
69449 >= 25*xabs
25*xabs = 69449
A
w4234
13891 >= 5*xabs
5*xabs = 13891
B
w4235
69683 >= 25*xabs
25*xabs = 69683
A
w4236
13938 >= 5*xabs
5*xabs = 13938
B
w4237
69694 >= 25*xabs
25*xabs = 69694
A
w4238
13943 >= 5*xabs
5*xabs = 13943
B
w4239
69718 >= 25*xabs
25*xabs = 69718
A
w4240
69726 >= 25*xabs
25*xabs = 69726
B
w4241
13946 >= 5*xabs
5*xabs = 13946
A
w4242
69738 >= 25*xabs
25*xabs = 69738
B
w4243
69743 >= 25*xabs
25*xabs = 69743
A
w4244
69751 >= 25*xabs
25*xabs = 69751
B

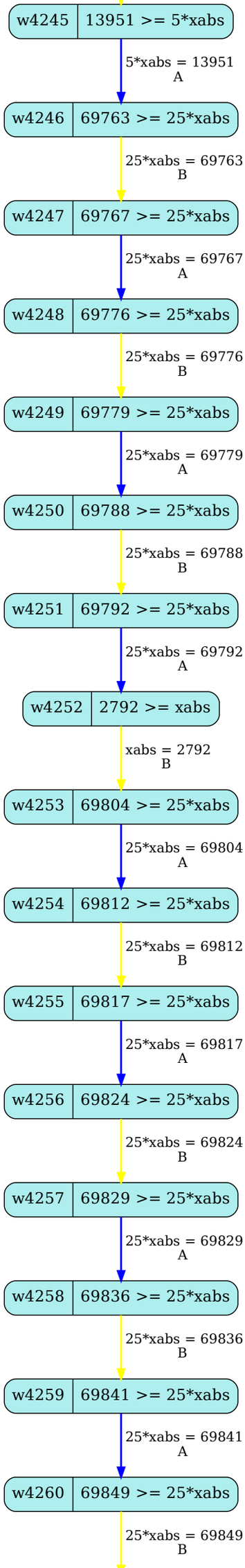
w4245
13951 >= 5*xabs
5*xabs = 13951
A
w4246
69763 >= 25*xabs
25*xabs = 69763
B
w4247
69767 >= 25*xabs
25*xabs = 69767
A
w4248
69776 >= 25*xabs
25*xabs = 69776
B
w4249
69779 >= 25*xabs
25*xabs = 69779
A
w4250
69788 >= 25*xabs
25*xabs = 69788
B
w4251
69792 >= 25*xabs
25*xabs = 69792
A
w4252
2792 >= xabs
xabs = 2792
B
w4253
69804 >= 25*xabs
25*xabs = 69804
A
w4254
69812 >= 25*xabs
25*xabs = 69812
B
w4255
69817 >= 25*xabs
25*xabs = 69817
A
w4256
69824 >= 25*xabs
25*xabs = 69824
B
w4257
69829 >= 25*xabs
25*xabs = 69829
A
w4258
69836 >= 25*xabs
25*xabs = 69836
B
w4259
69841 >= 25*xabs
25*xabs = 69841
A
w4260
69849 >= 25*xabs
25*xabs = 69849
B

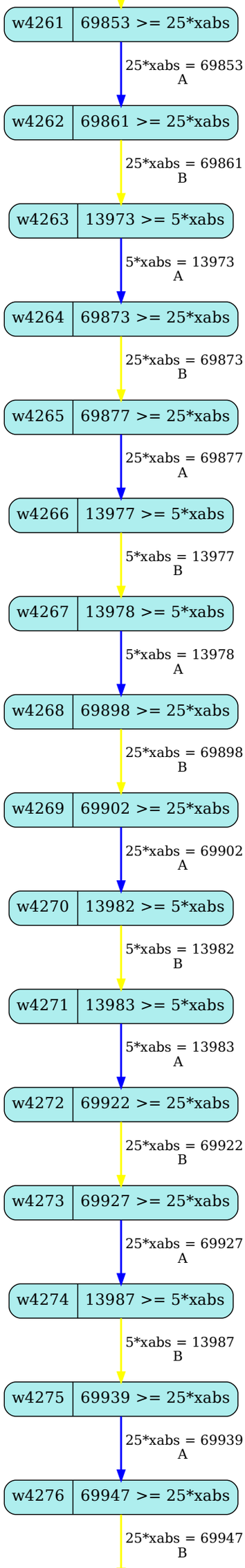
w4261
69853 >= 25*xabs
25*xabs = 69853
A
w4262
69861 >= 25*xabs
25*xabs = 69861
B
w4263
13973 >= 5*xabs
5*xabs = 13973
A
w4264
69873 >= 25*xabs
25*xabs = 69873
B
w4265
69877 >= 25*xabs
25*xabs = 69877
A
w4266
13977 >= 5*xabs
5*xabs = 13977
B
w4267
13978 >= 5*xabs
5*xabs = 13978
A
w4268
69898 >= 25*xabs
25*xabs = 69898
B
w4269
69902 >= 25*xabs
25*xabs = 69902
A
w4270
13982 >= 5*xabs
5*xabs = 13982
B
w4271
13983 >= 5*xabs
5*xabs = 13983
A
w4272
69922 >= 25*xabs
25*xabs = 69922
B
w4273
69927 >= 25*xabs
25*xabs = 69927
A
w4274
13987 >= 5*xabs
5*xabs = 13987
B
w4275
69939 >= 25*xabs
25*xabs = 69939
A
w4276
69947 >= 25*xabs
25*xabs = 69947
B

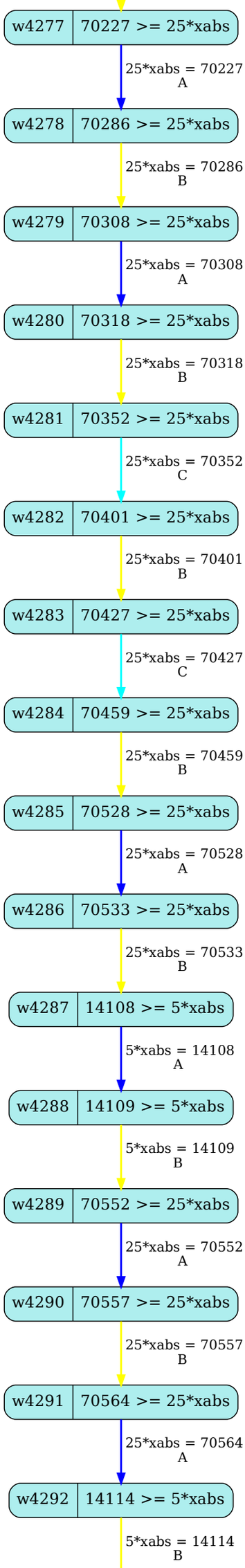
w4277
70227 >= 25*xabs
25*xabs = 70227
A
w4278
70286 >= 25*xabs
25*xabs = 70286
B
w4279
70308 >= 25*xabs
25*xabs = 70308
A
w4280
70318 >= 25*xabs
25*xabs = 70318
B
w4281
70352 >= 25*xabs
25*xabs = 70352
C
w4282
70401 >= 25*xabs
25*xabs = 70401
B
w4283
70427 >= 25*xabs
25*xabs = 70427
C
w4284
70459 >= 25*xabs
25*xabs = 70459
B
w4285
70528 >= 25*xabs
25*xabs = 70528
A
w4286
70533 >= 25*xabs
25*xabs = 70533
B
w4287
14108 >= 5*xabs
5*xabs = 14108
A
w4288
14109 >= 5*xabs
5*xabs = 14109
B
w4289
70552 >= 25*xabs
25*xabs = 70552
A
w4290
70557 >= 25*xabs
25*xabs = 70557
B
w4291
70564 >= 25*xabs
25*xabs = 70564
A
w4292
14114 >= 5*xabs
5*xabs = 14114
B

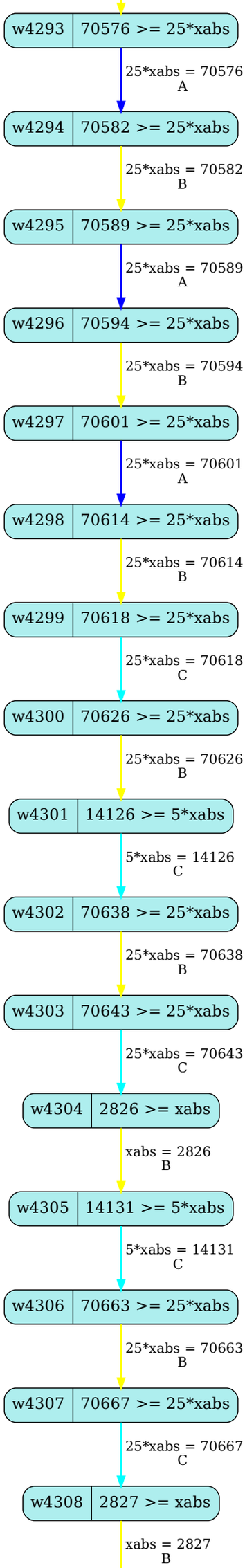
w4293
70576 >= 25*xabs
25*xabs = 70576
A
w4294
70582 >= 25*xabs
25*xabs = 70582
B
w4295
70589 >= 25*xabs
25*xabs = 70589
A
w4296
70594 >= 25*xabs
25*xabs = 70594
B
w4297
70601 >= 25*xabs
25*xabs = 70601
A
w4298
70614 >= 25*xabs
25*xabs = 70614
B
w4299
70618 >= 25*xabs
25*xabs = 70618
C
w4300
70626 >= 25*xabs
25*xabs = 70626
B
w4301
14126 >= 5*xabs
5*xabs = 14126
C
w4302
70638 >= 25*xabs
25*xabs = 70638
B
w4303
70643 >= 25*xabs
25*xabs = 70643
C
w4304
2826 >= xabs
xabs = 2826
B
w4305
14131 >= 5*xabs
5*xabs = 14131
C
w4306
70663 >= 25*xabs
25*xabs = 70663
B
w4307
70667 >= 25*xabs
25*xabs = 70667
C
w4308
2827 >= xabs
xabs = 2827
B

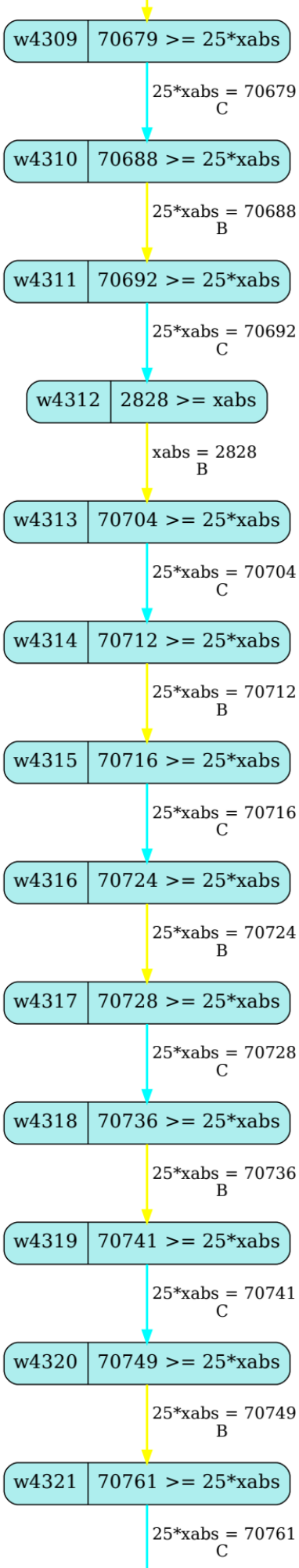
w4309
70679 >= 25*xabs
25*xabs = 70679
C
w4310
70688 >= 25*xabs
25*xabs = 70688
B
w4311
70692 >= 25*xabs
25*xabs = 70692
C
w4312
2828 >= xabs
xabs = 2828
B
w4313
70704 >= 25*xabs
25*xabs = 70704
C
w4314
70712 >= 25*xabs
25*xabs = 70712
B
w4315
70716 >= 25*xabs
25*xabs = 70716
C
w4316
70724 >= 25*xabs
25*xabs = 70724
B
w4317
70728 >= 25*xabs
25*xabs = 70728
C
w4318
70736 >= 25*xabs
25*xabs = 70736
B
w4319
70741 >= 25*xabs
25*xabs = 70741
C
w4320
70749 >= 25*xabs
25*xabs = 70749
B
w4321
70761 >= 25*xabs
25*xabs = 70761
C

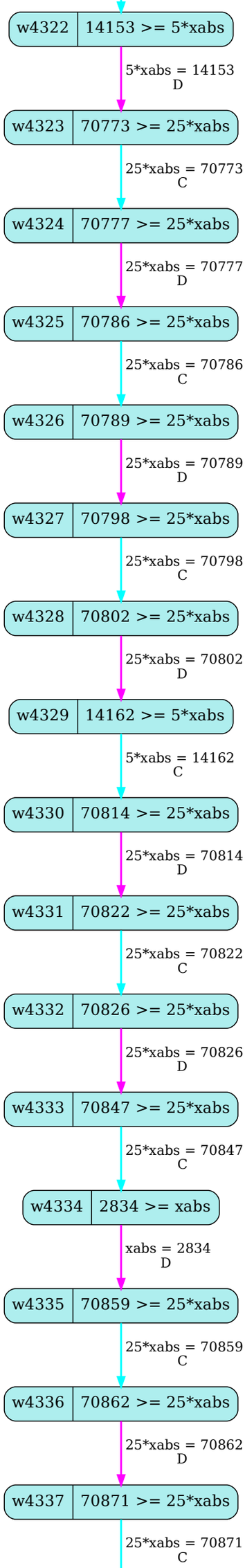
w4322
14153 >= 5*xabs
5*xabs = 14153
D
w4323
70773 >= 25*xabs
25*xabs = 70773
C
w4324
70777 >= 25*xabs
25*xabs = 70777
D
w4325
70786 >= 25*xabs
25*xabs = 70786
C
w4326
70789 >= 25*xabs
25*xabs = 70789
D
w4327
70798 >= 25*xabs
25*xabs = 70798
C
w4328
70802 >= 25*xabs
25*xabs = 70802
D
w4329
14162 >= 5*xabs
5*xabs = 14162
C
w4330
70814 >= 25*xabs
25*xabs = 70814
D
w4331
70822 >= 25*xabs
25*xabs = 70822
C
w4332
70826 >= 25*xabs
25*xabs = 70826
D
w4333
70847 >= 25*xabs
25*xabs = 70847
C
w4334
2834 >= xabs
xabs = 2834
D
w4335
70859 >= 25*xabs
25*xabs = 70859
C
w4336
70862 >= 25*xabs
25*xabs = 70862
D
w4337
70871 >= 25*xabs
25*xabs = 70871
C

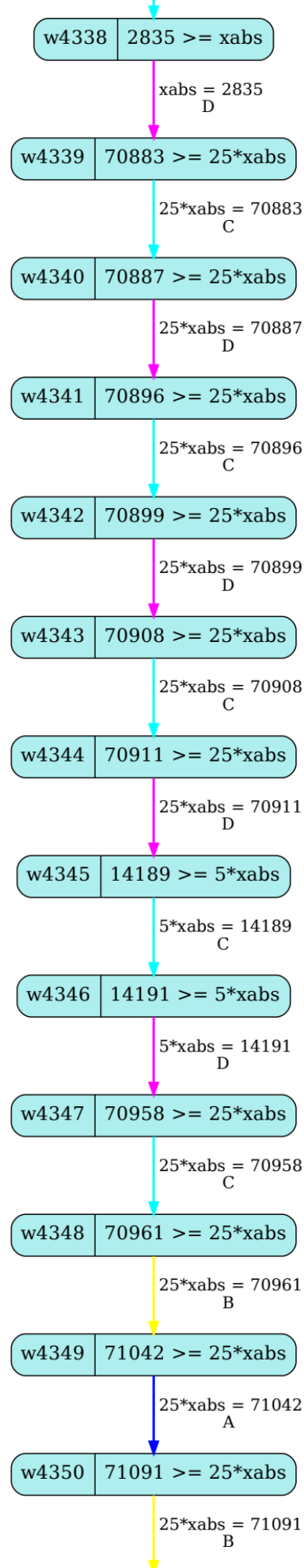
w4338
2835 >= xabs
xabs = 2835
D
w4339
70883 >= 25*xabs
25*xabs = 70883
C
w4340
70887 >= 25*xabs
25*xabs = 70887
D
w4341
70896 >= 25*xabs
25*xabs = 70896
C
w4342
70899 >= 25*xabs
25*xabs = 70899
D
w4343
70908 >= 25*xabs
25*xabs = 70908
C
w4344
70911 >= 25*xabs
25*xabs = 70911
D
w4345
14189 >= 5*xabs
5*xabs = 14189
C
w4346
14191 >= 5*xabs
5*xabs = 14191
D
w4347
70958 >= 25*xabs
25*xabs = 70958
C
w4348
70961 >= 25*xabs
25*xabs = 70961
B
w4349
71042 >= 25*xabs
25*xabs = 71042
A
w4350
71091 >= 25*xabs
25*xabs = 71091
B

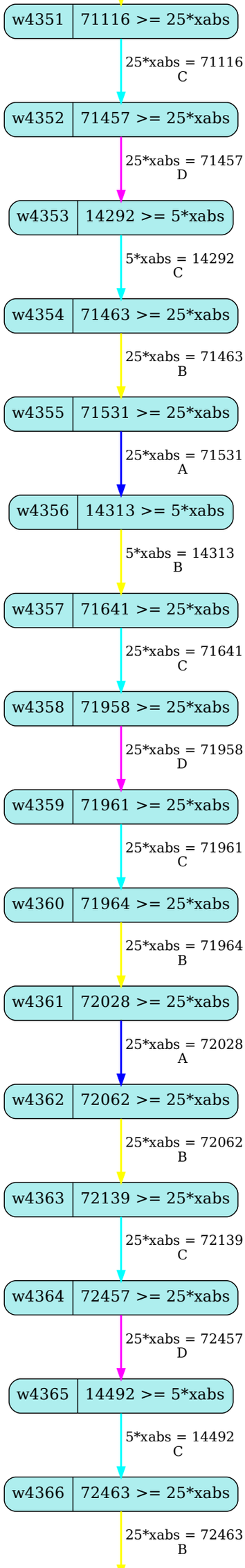
w4351
71116 >= 25*xabs
25*xabs = 71116
C
w4352
71457 >= 25*xabs
25*xabs = 71457
D
w4353
14292 >= 5*xabs
5*xabs = 14292
C
w4354
71463 >= 25*xabs
25*xabs = 71463
B
w4355
71531 >= 25*xabs
25*xabs = 71531
A
w4356
14313 >= 5*xabs
5*xabs = 14313
B
w4357
71641 >= 25*xabs
25*xabs = 71641
C
w4358
71958 >= 25*xabs
25*xabs = 71958
D
w4359
71961 >= 25*xabs
25*xabs = 71961
C
w4360
71964 >= 25*xabs
25*xabs = 71964
B
w4361
72028 >= 25*xabs
25*xabs = 72028
A
w4362
72062 >= 25*xabs
25*xabs = 72062
B
w4363
72139 >= 25*xabs
25*xabs = 72139
C
w4364
72457 >= 25*xabs
25*xabs = 72457
D
w4365
14492 >= 5*xabs
5*xabs = 14492
C
w4366
72463 >= 25*xabs
25*xabs = 72463
B

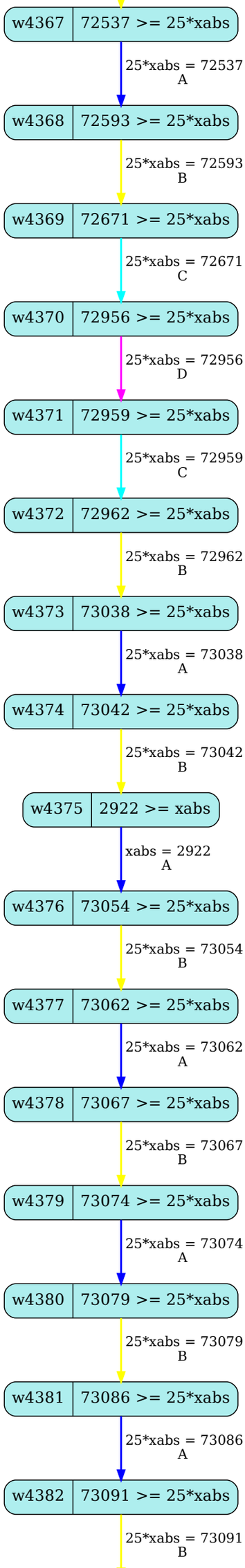
w4367
72537 >= 25*xabs
25*xabs = 72537
A
w4368
72593 >= 25*xabs
25*xabs = 72593
B
w4369
72671 >= 25*xabs
25*xabs = 72671
C
w4370
72956 >= 25*xabs
25*xabs = 72956
D
w4371
72959 >= 25*xabs
25*xabs = 72959
C
w4372
72962 >= 25*xabs
25*xabs = 72962
B
w4373
73038 >= 25*xabs
25*xabs = 73038
A
w4374
73042 >= 25*xabs
25*xabs = 73042
B
w4375
2922 >= xabs
xabs = 2922
A
w4376
73054 >= 25*xabs
25*xabs = 73054
B
w4377
73062 >= 25*xabs
25*xabs = 73062
A
w4378
73067 >= 25*xabs
25*xabs = 73067
B
w4379
73074 >= 25*xabs
25*xabs = 73074
A
w4380
73079 >= 25*xabs
25*xabs = 73079
B
w4381
73086 >= 25*xabs
25*xabs = 73086
A
w4382
73091 >= 25*xabs
25*xabs = 73091
B

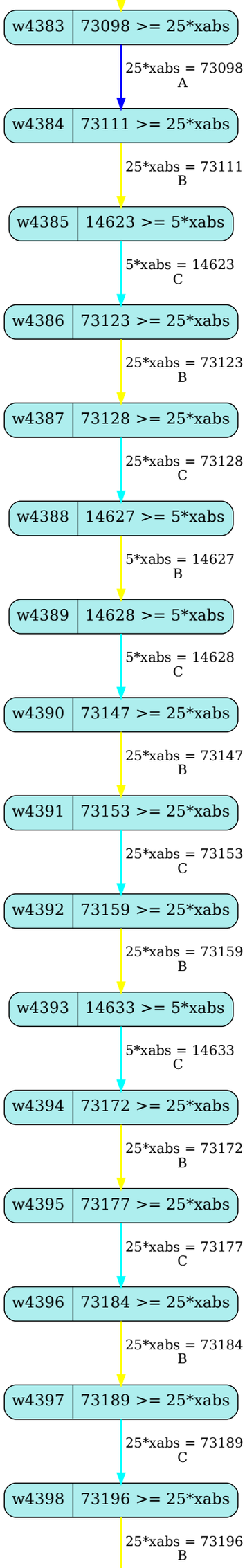
w4383
73098 >= 25*xabs
25*xabs = 73098
A
w4384
73111 >= 25*xabs
25*xabs = 73111
B
w4385
14623 >= 5*xabs
5*xabs = 14623
C
w4386
73123 >= 25*xabs
25*xabs = 73123
B
w4387
73128 >= 25*xabs
25*xabs = 73128
C
w4388
14627 >= 5*xabs
5*xabs = 14627
B
w4389
14628 >= 5*xabs
5*xabs = 14628
C
w4390
73147 >= 25*xabs
25*xabs = 73147
B
w4391
73153 >= 25*xabs
25*xabs = 73153
C
w4392
73159 >= 25*xabs
25*xabs = 73159
B
w4393
14633 >= 5*xabs
5*xabs = 14633
C
w4394
73172 >= 25*xabs
25*xabs = 73172
B
w4395
73177 >= 25*xabs
25*xabs = 73177
C
w4396
73184 >= 25*xabs
25*xabs = 73184
B
w4397
73189 >= 25*xabs
25*xabs = 73189
C
w4398
73196 >= 25*xabs
25*xabs = 73196
B

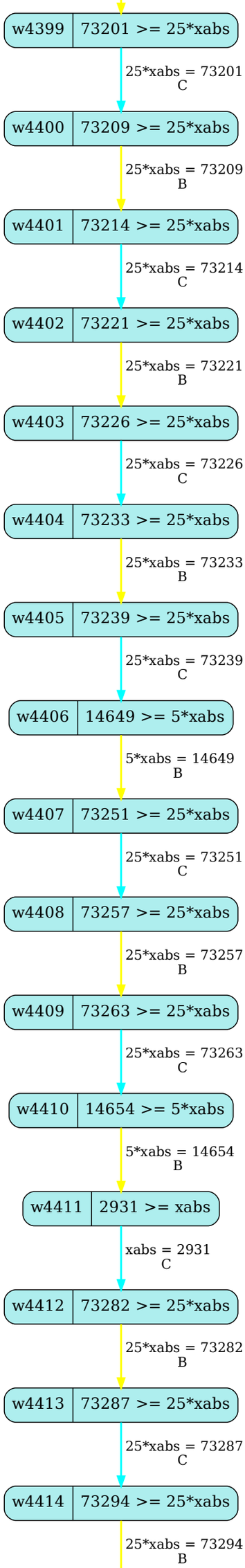
w4399
73201 >= 25*xabs
25*xabs = 73201
C
w4400
73209 >= 25*xabs
25*xabs = 73209
B
w4401
73214 >= 25*xabs
25*xabs = 73214
C
w4402
73221 >= 25*xabs
25*xabs = 73221
B
w4403
73226 >= 25*xabs
25*xabs = 73226
C
w4404
73233 >= 25*xabs
25*xabs = 73233
B
w4405
73239 >= 25*xabs
25*xabs = 73239
C
w4406
14649 >= 5*xabs
5*xabs = 14649
B
w4407
73251 >= 25*xabs
25*xabs = 73251
C
w4408
73257 >= 25*xabs
25*xabs = 73257
B
w4409
73263 >= 25*xabs
25*xabs = 73263
C
w4410
14654 >= 5*xabs
5*xabs = 14654
B
w4411
2931 >= xabs
xabs = 2931
C
w4412
73282 >= 25*xabs
25*xabs = 73282
B
w4413
73287 >= 25*xabs
25*xabs = 73287
C
w4414
73294 >= 25*xabs
25*xabs = 73294
B

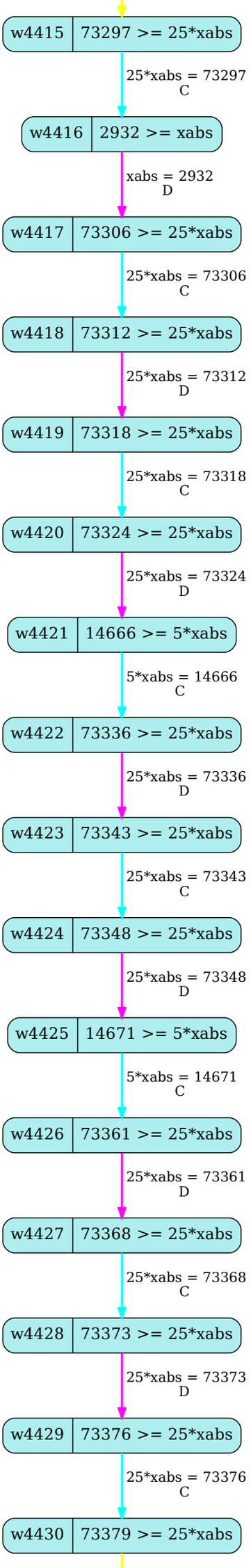
w4415
73297 >= 25*xabs
25*xabs = 73297
C
w4416
2932 >= xabs
xabs = 2932
D
w4417
73306 >= 25*xabs
25*xabs = 73306
C
w4418
73312 >= 25*xabs
25*xabs = 73312
D
w4419
73318 >= 25*xabs
25*xabs = 73318
C
w4420
73324 >= 25*xabs
25*xabs = 73324
D
w4421
14666 >= 5*xabs
5*xabs = 14666
C
w4422
73336 >= 25*xabs
25*xabs = 73336
D
w4423
73343 >= 25*xabs
25*xabs = 73343
C
w4424
73348 >= 25*xabs
25*xabs = 73348
D
w4425
14671 >= 5*xabs
5*xabs = 14671
C
w4426
73361 >= 25*xabs
25*xabs = 73361
D
w4427
73368 >= 25*xabs
25*xabs = 73368
C
w4428
73373 >= 25*xabs
25*xabs = 73373
D
w4429
73376 >= 25*xabs
25*xabs = 73376
C
w4430
73379 >= 25*xabs

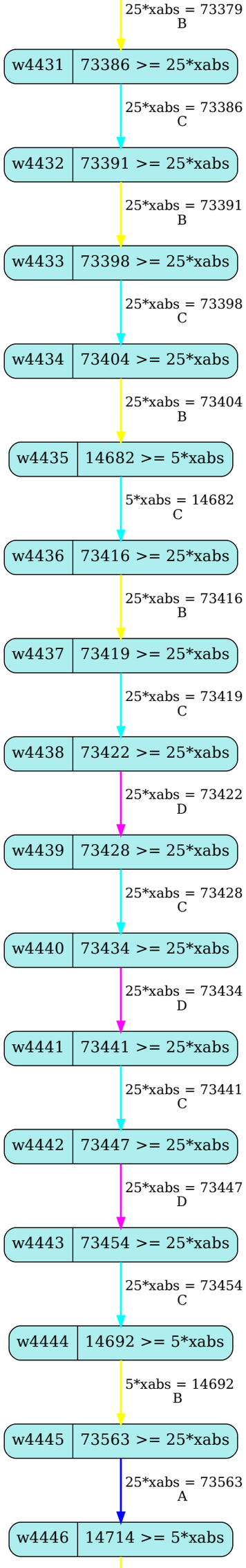
25*xabs = 73379
B
w4431
73386 >= 25*xabs
25*xabs = 73386
C
w4432
73391 >= 25*xabs
25*xabs = 73391
B
w4433
73398 >= 25*xabs
25*xabs = 73398
C
w4434
73404 >= 25*xabs
25*xabs = 73404
B
w4435
14682 >= 5*xabs
5*xabs = 14682
C
w4436
73416 >= 25*xabs
25*xabs = 73416
B
w4437
73419 >= 25*xabs
25*xabs = 73419
C
w4438
73422 >= 25*xabs
25*xabs = 73422
D
w4439
73428 >= 25*xabs
25*xabs = 73428
C
w4440
73434 >= 25*xabs
25*xabs = 73434
D
w4441
73441 >= 25*xabs
25*xabs = 73441
C
w4442
73447 >= 25*xabs
25*xabs = 73447
D
w4443
73454 >= 25*xabs
25*xabs = 73454
C
w4444
14692 >= 5*xabs
5*xabs = 14692
B
w4445
73563 >= 25*xabs
25*xabs = 73563
A
w4446
14714 >= 5*xabs

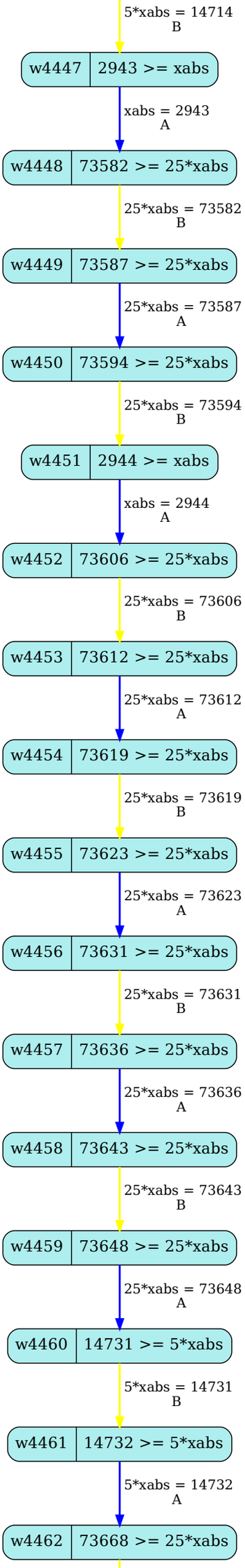
5*xabs = 14714
B
w4447
2943 >= xabs
xabs = 2943
A
w4448
73582 >= 25*xabs
25*xabs = 73582
B
w4449
73587 >= 25*xabs
25*xabs = 73587
A
w4450
73594 >= 25*xabs
25*xabs = 73594
B
w4451
2944 >= xabs
xabs = 2944
A
w4452
73606 >= 25*xabs
25*xabs = 73606
B
w4453
73612 >= 25*xabs
25*xabs = 73612
A
w4454
73619 >= 25*xabs
25*xabs = 73619
B
w4455
73623 >= 25*xabs
25*xabs = 73623
A
w4456
73631 >= 25*xabs
25*xabs = 73631
B
w4457
73636 >= 25*xabs
25*xabs = 73636
A
w4458
73643 >= 25*xabs
25*xabs = 73643
B
w4459
73648 >= 25*xabs
25*xabs = 73648
A
w4460
14731 >= 5*xabs
5*xabs = 14731
B
w4461
14732 >= 5*xabs
5*xabs = 14732
A
w4462
73668 >= 25*xabs

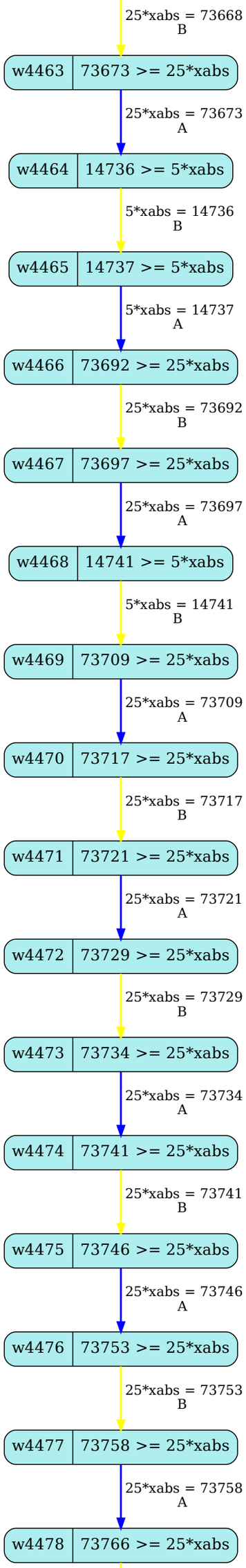
25*xabs = 73668
B
w4463
73673 >= 25*xabs
25*xabs = 73673
A
w4464
14736 >= 5*xabs
5*xabs = 14736
B
w4465
14737 >= 5*xabs
5*xabs = 14737
A
w4466
73692 >= 25*xabs
25*xabs = 73692
B
w4467
73697 >= 25*xabs
25*xabs = 73697
A
w4468
14741 >= 5*xabs
5*xabs = 14741
B
w4469
73709 >= 25*xabs
25*xabs = 73709
A
w4470
73717 >= 25*xabs
25*xabs = 73717
B
w4471
73721 >= 25*xabs
25*xabs = 73721
A
w4472
73729 >= 25*xabs
25*xabs = 73729
B
w4473
73734 >= 25*xabs
25*xabs = 73734
A
w4474
73741 >= 25*xabs
25*xabs = 73741
B
w4475
73746 >= 25*xabs
25*xabs = 73746
A
w4476
73753 >= 25*xabs
25*xabs = 73753
B
w4477
73758 >= 25*xabs
25*xabs = 73758
A
w4478
73766 >= 25*xabs

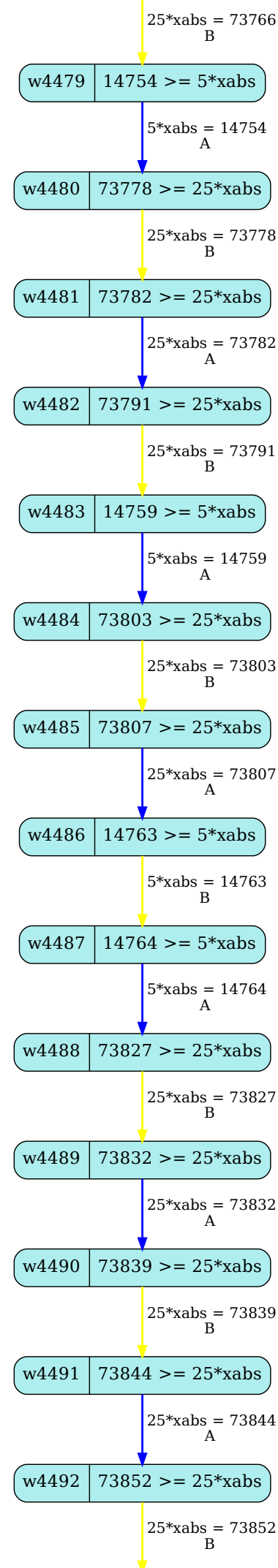
25*xabs = 73766
B
w4479
14754 >= 5*xabs
5*xabs = 14754
A
w4480
73778 >= 25*xabs
25*xabs = 73778
B
w4481
73782 >= 25*xabs
25*xabs = 73782
A
w4482
73791 >= 25*xabs
25*xabs = 73791
B
w4483
14759 >= 5*xabs
5*xabs = 14759
A
w4484
73803 >= 25*xabs
25*xabs = 73803
B
w4485
73807 >= 25*xabs
25*xabs = 73807
A
w4486
14763 >= 5*xabs
5*xabs = 14763
B
w4487
14764 >= 5*xabs
5*xabs = 14764
A
w4488
73827 >= 25*xabs
25*xabs = 73827
B
w4489
73832 >= 25*xabs
25*xabs = 73832
A
w4490
73839 >= 25*xabs
25*xabs = 73839
B
w4491
73844 >= 25*xabs
25*xabs = 73844
A
w4492
73852 >= 25*xabs
25*xabs = 73852
B

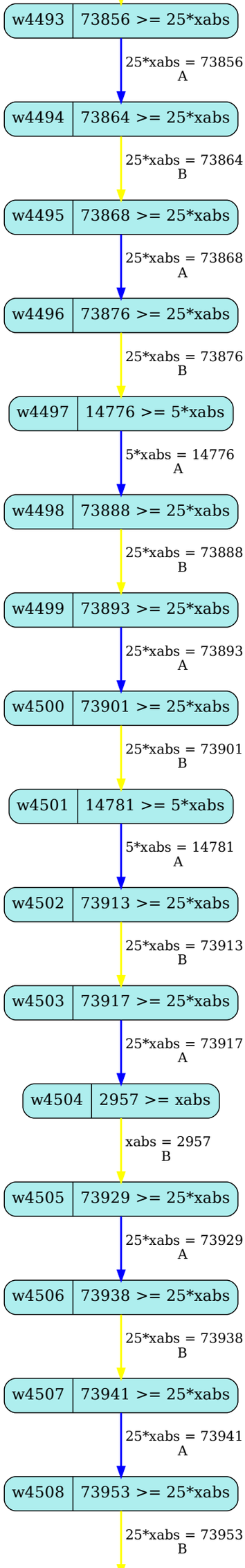
w4493
73856 >= 25*xabs
25*xabs = 73856
A
w4494
73864 >= 25*xabs
25*xabs = 73864
B
w4495
73868 >= 25*xabs
25*xabs = 73868
A
w4496
73876 >= 25*xabs
25*xabs = 73876
B
w4497
14776 >= 5*xabs
5*xabs = 14776
A
w4498
73888 >= 25*xabs
25*xabs = 73888
B
w4499
73893 >= 25*xabs
25*xabs = 73893
A
w4500
73901 >= 25*xabs
25*xabs = 73901
B
w4501
14781 >= 5*xabs
5*xabs = 14781
A
w4502
73913 >= 25*xabs
25*xabs = 73913
B
w4503
73917 >= 25*xabs
25*xabs = 73917
A
w4504
2957 >= xabs
xabs = 2957
B
w4505
73929 >= 25*xabs
25*xabs = 73929
A
w4506
73938 >= 25*xabs
25*xabs = 73938
B
w4507
73941 >= 25*xabs
25*xabs = 73941
A
w4508
73953 >= 25*xabs
25*xabs = 73953
B

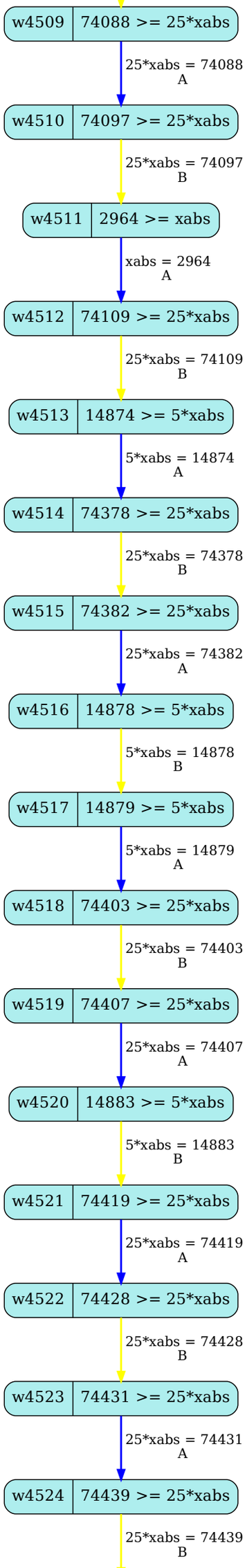
w4509
74088 >= 25*xabs
25*xabs = 74088
A
w4510
74097 >= 25*xabs
25*xabs = 74097
B
w4511
2964 >= xabs
xabs = 2964
A
w4512
74109 >= 25*xabs
25*xabs = 74109
B
w4513
14874 >= 5*xabs
5*xabs = 14874
A
w4514
74378 >= 25*xabs
25*xabs = 74378
B
w4515
74382 >= 25*xabs
25*xabs = 74382
A
w4516
14878 >= 5*xabs
5*xabs = 14878
B
w4517
14879 >= 5*xabs
5*xabs = 14879
A
w4518
74403 >= 25*xabs
25*xabs = 74403
B
w4519
74407 >= 25*xabs
25*xabs = 74407
A
w4520
14883 >= 5*xabs
5*xabs = 14883
B
w4521
74419 >= 25*xabs
25*xabs = 74419
A
w4522
74428 >= 25*xabs
25*xabs = 74428
B
w4523
74431 >= 25*xabs
25*xabs = 74431
A
w4524
74439 >= 25*xabs
25*xabs = 74439
B

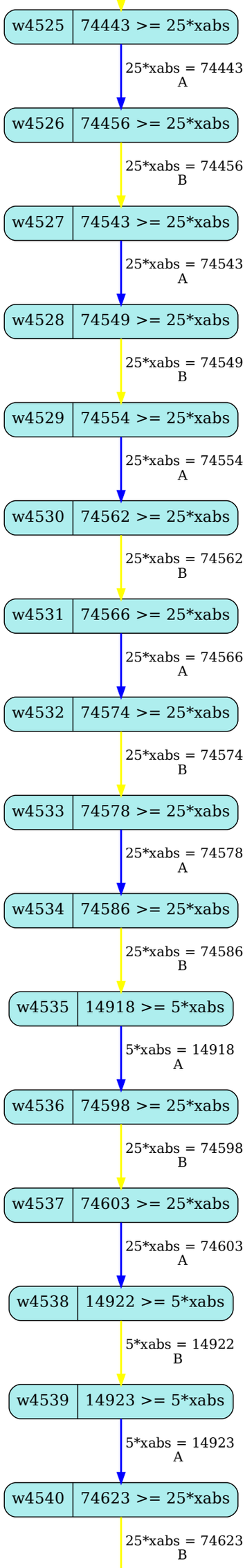
w4525
74443 >= 25*xabs
25*xabs = 74443
A
w4526
74456 >= 25*xabs
25*xabs = 74456
B
w4527
74543 >= 25*xabs
25*xabs = 74543
A
w4528
74549 >= 25*xabs
25*xabs = 74549
B
w4529
74554 >= 25*xabs
25*xabs = 74554
A
w4530
74562 >= 25*xabs
25*xabs = 74562
B
w4531
74566 >= 25*xabs
25*xabs = 74566
A
w4532
74574 >= 25*xabs
25*xabs = 74574
B
w4533
74578 >= 25*xabs
25*xabs = 74578
A
w4534
74586 >= 25*xabs
25*xabs = 74586
B
w4535
14918 >= 5*xabs
5*xabs = 14918
A
w4536
74598 >= 25*xabs
25*xabs = 74598
B
w4537
74603 >= 25*xabs
25*xabs = 74603
A
w4538
14922 >= 5*xabs
5*xabs = 14922
B
w4539
14923 >= 5*xabs
5*xabs = 14923
A
w4540
74623 >= 25*xabs
25*xabs = 74623
B

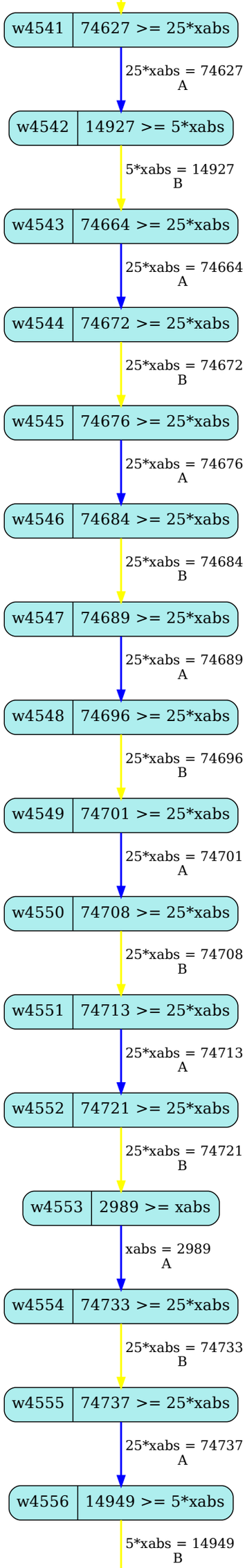
w4541
74627 >= 25*xabs
25*xabs = 74627
A
w4542
14927 >= 5*xabs
5*xabs = 14927
B
w4543
74664 >= 25*xabs
25*xabs = 74664
A
w4544
74672 >= 25*xabs
25*xabs = 74672
B
w4545
74676 >= 25*xabs
25*xabs = 74676
A
w4546
74684 >= 25*xabs
25*xabs = 74684
B
w4547
74689 >= 25*xabs
25*xabs = 74689
A
w4548
74696 >= 25*xabs
25*xabs = 74696
B
w4549
74701 >= 25*xabs
25*xabs = 74701
A
w4550
74708 >= 25*xabs
25*xabs = 74708
B
w4551
74713 >= 25*xabs
25*xabs = 74713
A
w4552
74721 >= 25*xabs
25*xabs = 74721
B
w4553
2989 >= xabs
xabs = 2989
A
w4554
74733 >= 25*xabs
25*xabs = 74733
B
w4555
74737 >= 25*xabs
25*xabs = 74737
A
w4556
14949 >= 5*xabs
5*xabs = 14949
B

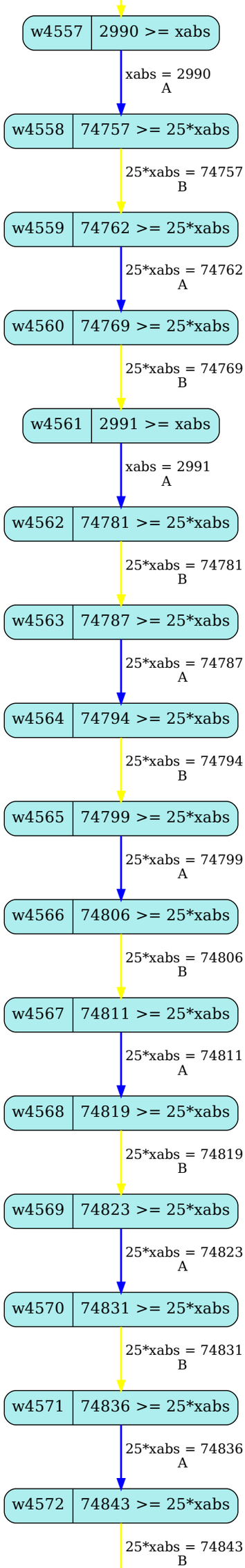
w4557
2990 >= xabs
xabs = 2990
A
w4558
74757 >= 25*xabs
25*xabs = 74757
B
w4559
74762 >= 25*xabs
25*xabs = 74762
A
w4560
74769 >= 25*xabs
25*xabs = 74769
B
w4561
2991 >= xabs
xabs = 2991
A
w4562
74781 >= 25*xabs
25*xabs = 74781
B
w4563
74787 >= 25*xabs
25*xabs = 74787
A
w4564
74794 >= 25*xabs
25*xabs = 74794
B
w4565
74799 >= 25*xabs
25*xabs = 74799
A
w4566
74806 >= 25*xabs
25*xabs = 74806
B
w4567
74811 >= 25*xabs
25*xabs = 74811
A
w4568
74819 >= 25*xabs
25*xabs = 74819
B
w4569
74823 >= 25*xabs
25*xabs = 74823
A
w4570
74831 >= 25*xabs
25*xabs = 74831
B
w4571
74836 >= 25*xabs
25*xabs = 74836
A
w4572
74843 >= 25*xabs
25*xabs = 74843
B

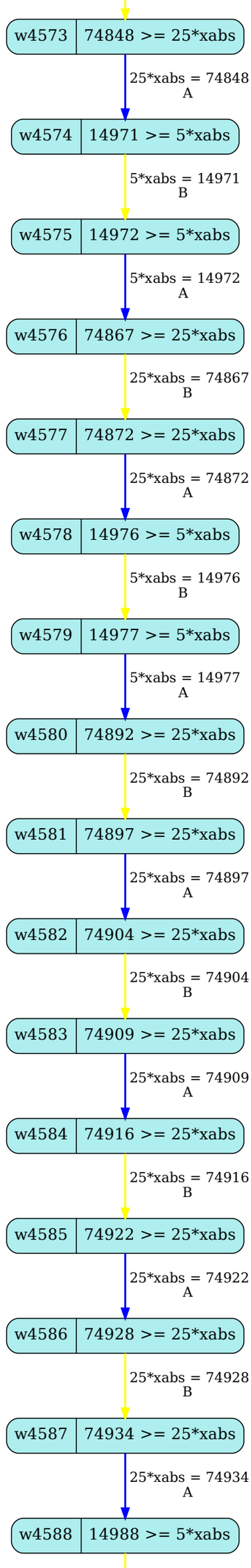
w4573
74848 >= 25*xabs
25*xabs = 74848
A
w4574
14971 >= 5*xabs
5*xabs = 14971
B
w4575
14972 >= 5*xabs
5*xabs = 14972
A
w4576
74867 >= 25*xabs
25*xabs = 74867
B
w4577
74872 >= 25*xabs
25*xabs = 74872
A
w4578
14976 >= 5*xabs
5*xabs = 14976
B
w4579
14977 >= 5*xabs
5*xabs = 14977
A
w4580
74892 >= 25*xabs
25*xabs = 74892
B
w4581
74897 >= 25*xabs
25*xabs = 74897
A
w4582
74904 >= 25*xabs
25*xabs = 74904
B
w4583
74909 >= 25*xabs
25*xabs = 74909
A
w4584
74916 >= 25*xabs
25*xabs = 74916
B
w4585
74922 >= 25*xabs
25*xabs = 74922
A
w4586
74928 >= 25*xabs
25*xabs = 74928
B
w4587
74934 >= 25*xabs
25*xabs = 74934
A
w4588
14988 >= 5*xabs

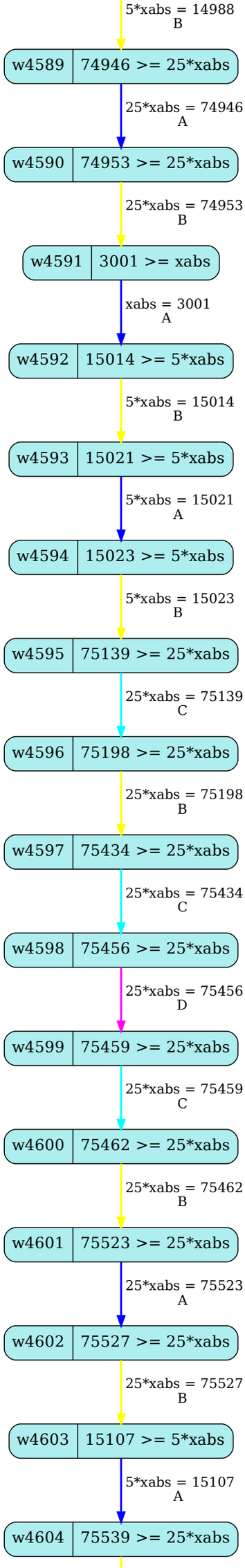
5*xabs = 14988
B
w4589
74946 >= 25*xabs
25*xabs = 74946
A
w4590
74953 >= 25*xabs
25*xabs = 74953
B
w4591
3001 >= xabs
xabs = 3001
A
w4592
15014 >= 5*xabs
5*xabs = 15014
B
w4593
15021 >= 5*xabs
5*xabs = 15021
A
w4594
15023 >= 5*xabs
5*xabs = 15023
B
w4595
75139 >= 25*xabs
25*xabs = 75139
C
w4596
75198 >= 25*xabs
25*xabs = 75198
B
w4597
75434 >= 25*xabs
25*xabs = 75434
C
w4598
75456 >= 25*xabs
25*xabs = 75456
D
w4599
75459 >= 25*xabs
25*xabs = 75459
C
w4600
75462 >= 25*xabs
25*xabs = 75462
B
w4601
75523 >= 25*xabs
25*xabs = 75523
A
w4602
75527 >= 25*xabs
25*xabs = 75527
B
w4603
15107 >= 5*xabs
5*xabs = 15107
A
w4604
75539 >= 25*xabs

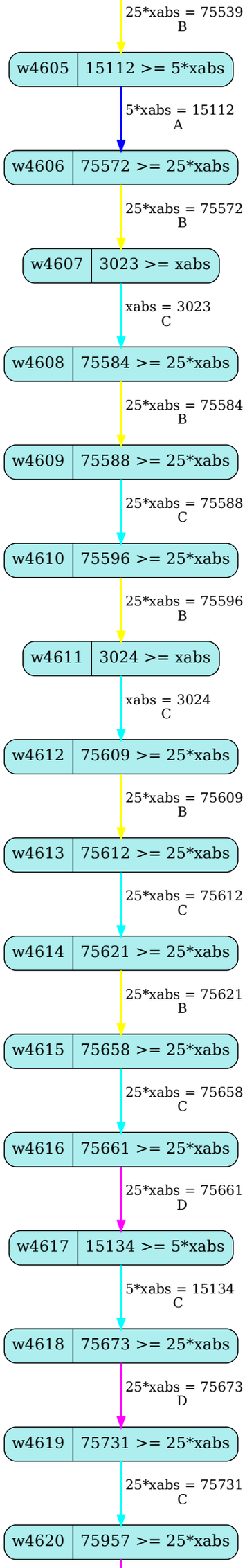
25*xabs = 75539
B
w4605
15112 >= 5*xabs
5*xabs = 15112
A
w4606
75572 >= 25*xabs
25*xabs = 75572
B
w4607
3023 >= xabs
xabs = 3023
C
w4608
75584 >= 25*xabs
25*xabs = 75584
B
w4609
75588 >= 25*xabs
25*xabs = 75588
C
w4610
75596 >= 25*xabs
25*xabs = 75596
B
w4611
3024 >= xabs
xabs = 3024
C
w4612
75609 >= 25*xabs
25*xabs = 75609
B
w4613
75612 >= 25*xabs
25*xabs = 75612
C
w4614
75621 >= 25*xabs
25*xabs = 75621
B
w4615
75658 >= 25*xabs
25*xabs = 75658
C
w4616
75661 >= 25*xabs
25*xabs = 75661
D
w4617
15134 >= 5*xabs
5*xabs = 15134
C
w4618
75673 >= 25*xabs
25*xabs = 75673
D
w4619
75731 >= 25*xabs
25*xabs = 75731
C
w4620
75957 >= 25*xabs

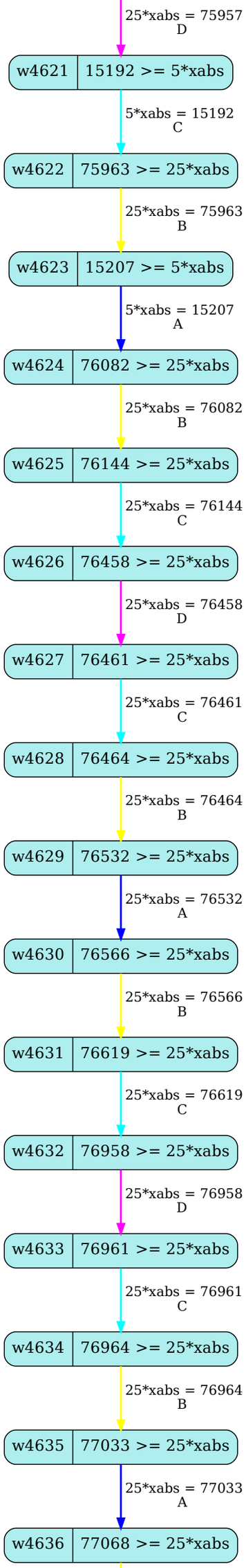
25*xabs = 75957
D
w4621
15192 >= 5*xabs
5*xabs = 15192
C
w4622
75963 >= 25*xabs
25*xabs = 75963
B
w4623
15207 >= 5*xabs
5*xabs = 15207
A
w4624
76082 >= 25*xabs
25*xabs = 76082
B
w4625
76144 >= 25*xabs
25*xabs = 76144
C
w4626
76458 >= 25*xabs
25*xabs = 76458
D
w4627
76461 >= 25*xabs
25*xabs = 76461
C
w4628
76464 >= 25*xabs
25*xabs = 76464
B
w4629
76532 >= 25*xabs
25*xabs = 76532
A
w4630
76566 >= 25*xabs
25*xabs = 76566
B
w4631
76619 >= 25*xabs
25*xabs = 76619
C
w4632
76958 >= 25*xabs
25*xabs = 76958
D
w4633
76961 >= 25*xabs
25*xabs = 76961
C
w4634
76964 >= 25*xabs
25*xabs = 76964
B
w4635
77033 >= 25*xabs
25*xabs = 77033
A
w4636
77068 >= 25*xabs

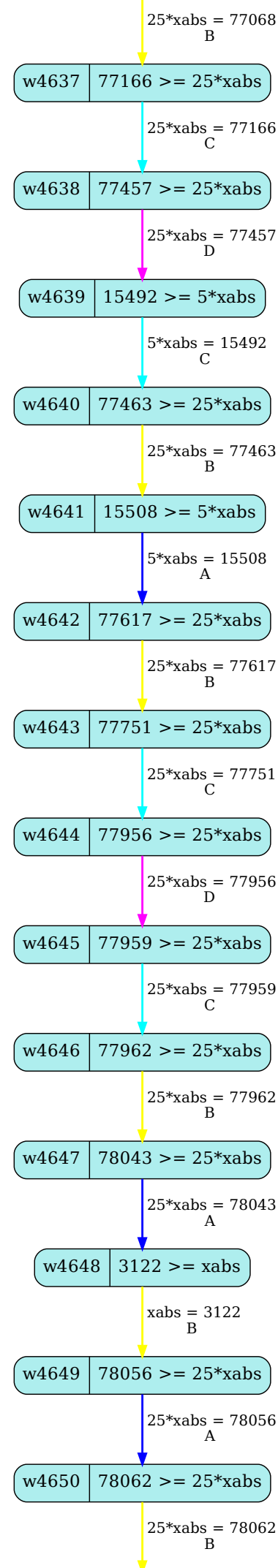
25*xabs = 77068
B
w4637
77166 >= 25*xabs
25*xabs = 77166
C
w4638
77457 >= 25*xabs
25*xabs = 77457
D
w4639
15492 >= 5*xabs
5*xabs = 15492
C
w4640
77463 >= 25*xabs
25*xabs = 77463
B
w4641
15508 >= 5*xabs
5*xabs = 15508
A
w4642
77617 >= 25*xabs
25*xabs = 77617
B
w4643
77751 >= 25*xabs
25*xabs = 77751
C
w4644
77956 >= 25*xabs
25*xabs = 77956
D
w4645
77959 >= 25*xabs
25*xabs = 77959
C
w4646
77962 >= 25*xabs
25*xabs = 77962
B
w4647
78043 >= 25*xabs
25*xabs = 78043
A
w4648
3122 >= xabs
xabs = 3122
B
w4649
78056 >= 25*xabs
25*xabs = 78056
A
w4650
78062 >= 25*xabs
25*xabs = 78062
B

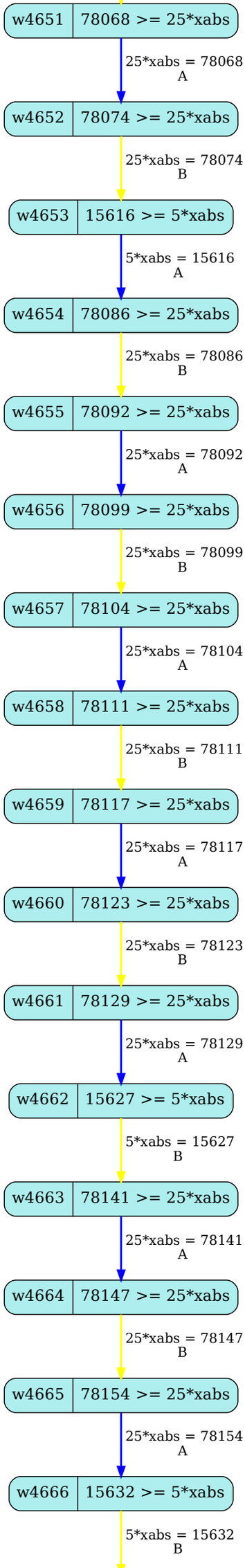
w4651
78068 >= 25*xabs
25*xabs = 78068
A
w4652
78074 >= 25*xabs
25*xabs = 78074
B
w4653
15616 >= 5*xabs
5*xabs = 15616
A
w4654
78086 >= 25*xabs
25*xabs = 78086
B
w4655
78092 >= 25*xabs
25*xabs = 78092
A
w4656
78099 >= 25*xabs
25*xabs = 78099
B
w4657
78104 >= 25*xabs
25*xabs = 78104
A
w4658
78111 >= 25*xabs
25*xabs = 78111
B
w4659
78117 >= 25*xabs
25*xabs = 78117
A
w4660
78123 >= 25*xabs
25*xabs = 78123
B
w4661
78129 >= 25*xabs
25*xabs = 78129
A
w4662
15627 >= 5*xabs
5*xabs = 15627
B
w4663
78141 >= 25*xabs
25*xabs = 78141
A
w4664
78147 >= 25*xabs
25*xabs = 78147
B
w4665
78154 >= 25*xabs
25*xabs = 78154
A
w4666
15632 >= 5*xabs
5*xabs = 15632
B

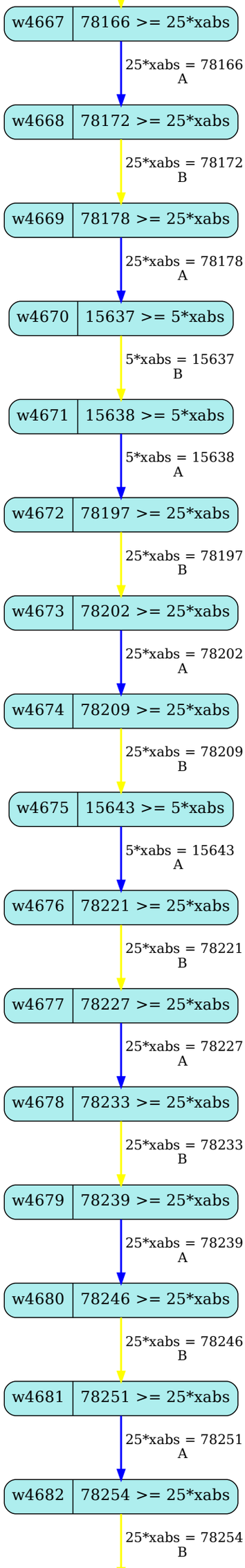
w4667
78166 >= 25*xabs
25*xabs = 78166
A
w4668
78172 >= 25*xabs
25*xabs = 78172
B
w4669
78178 >= 25*xabs
25*xabs = 78178
A
w4670
15637 >= 5*xabs
5*xabs = 15637
B
w4671
15638 >= 5*xabs
5*xabs = 15638
A
w4672
78197 >= 25*xabs
25*xabs = 78197
B
w4673
78202 >= 25*xabs
25*xabs = 78202
A
w4674
78209 >= 25*xabs
25*xabs = 78209
B
w4675
15643 >= 5*xabs
5*xabs = 15643
A
w4676
78221 >= 25*xabs
25*xabs = 78221
B
w4677
78227 >= 25*xabs
25*xabs = 78227
A
w4678
78233 >= 25*xabs
25*xabs = 78233
B
w4679
78239 >= 25*xabs
25*xabs = 78239
A
w4680
78246 >= 25*xabs
25*xabs = 78246
B
w4681
78251 >= 25*xabs
25*xabs = 78251
A
w4682
78254 >= 25*xabs
25*xabs = 78254
B

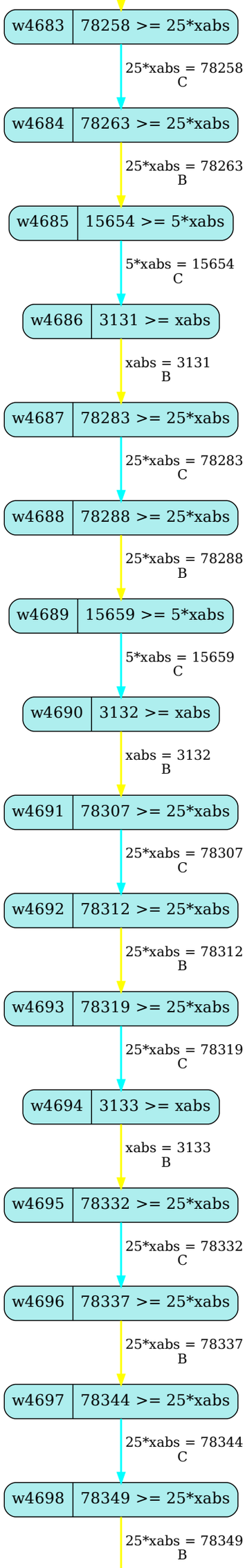
w4683
78258 >= 25*xabs
25*xabs = 78258
C
w4684
78263 >= 25*xabs
25*xabs = 78263
B
w4685
15654 >= 5*xabs
5*xabs = 15654
C
w4686
3131 >= xabs
xabs = 3131
B
w4687
78283 >= 25*xabs
25*xabs = 78283
C
w4688
78288 >= 25*xabs
25*xabs = 78288
B
w4689
15659 >= 5*xabs
5*xabs = 15659
C
w4690
3132 >= xabs
xabs = 3132
B
w4691
78307 >= 25*xabs
25*xabs = 78307
C
w4692
78312 >= 25*xabs
25*xabs = 78312
B
w4693
78319 >= 25*xabs
25*xabs = 78319
C
w4694
3133 >= xabs
xabs = 3133
B
w4695
78332 >= 25*xabs
25*xabs = 78332
C
w4696
78337 >= 25*xabs
25*xabs = 78337
B
w4697
78344 >= 25*xabs
25*xabs = 78344
C
w4698
78349 >= 25*xabs
25*xabs = 78349
B

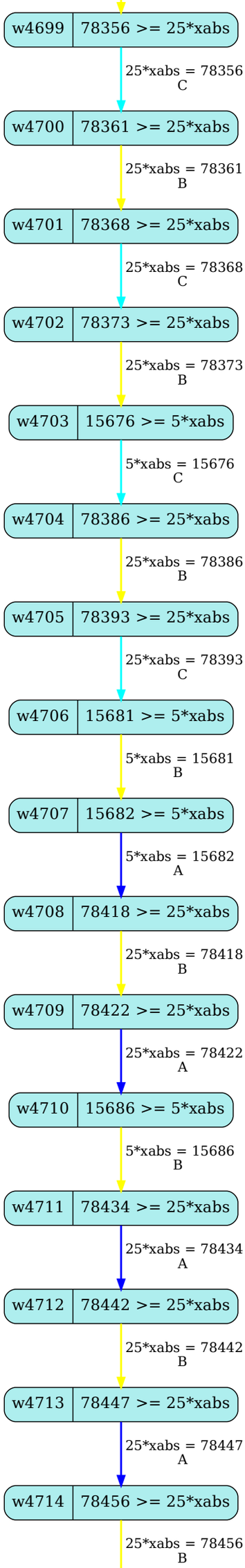
w4699
78356 >= 25*xabs
25*xabs = 78356
C
w4700
78361 >= 25*xabs
25*xabs = 78361
B
w4701
78368 >= 25*xabs
25*xabs = 78368
C
w4702
78373 >= 25*xabs
25*xabs = 78373
B
w4703
15676 >= 5*xabs
5*xabs = 15676
C
w4704
78386 >= 25*xabs
25*xabs = 78386
B
w4705
78393 >= 25*xabs
25*xabs = 78393
C
w4706
15681 >= 5*xabs
5*xabs = 15681
B
w4707
15682 >= 5*xabs
5*xabs = 15682
A
w4708
78418 >= 25*xabs
25*xabs = 78418
B
w4709
78422 >= 25*xabs
25*xabs = 78422
A
w4710
15686 >= 5*xabs
5*xabs = 15686
B
w4711
78434 >= 25*xabs
25*xabs = 78434
A
w4712
78442 >= 25*xabs
25*xabs = 78442
B
w4713
78447 >= 25*xabs
25*xabs = 78447
A
w4714
78456 >= 25*xabs
25*xabs = 78456
B

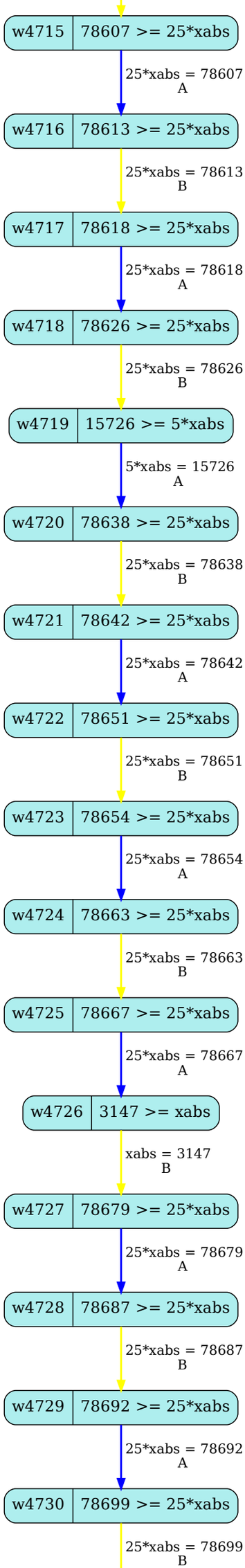
w4715
78607 >= 25*xabs
25*xabs = 78607
A
w4716
78613 >= 25*xabs
25*xabs = 78613
B
w4717
78618 >= 25*xabs
25*xabs = 78618
A
w4718
78626 >= 25*xabs
25*xabs = 78626
B
w4719
15726 >= 5*xabs
5*xabs = 15726
A
w4720
78638 >= 25*xabs
25*xabs = 78638
B
w4721
78642 >= 25*xabs
25*xabs = 78642
A
w4722
78651 >= 25*xabs
25*xabs = 78651
B
w4723
78654 >= 25*xabs
25*xabs = 78654
A
w4724
78663 >= 25*xabs
25*xabs = 78663
B
w4725
78667 >= 25*xabs
25*xabs = 78667
A
w4726
3147 >= xabs
xabs = 3147
B
w4727
78679 >= 25*xabs
25*xabs = 78679
A
w4728
78687 >= 25*xabs
25*xabs = 78687
B
w4729
78692 >= 25*xabs
25*xabs = 78692
A
w4730
78699 >= 25*xabs
25*xabs = 78699
B

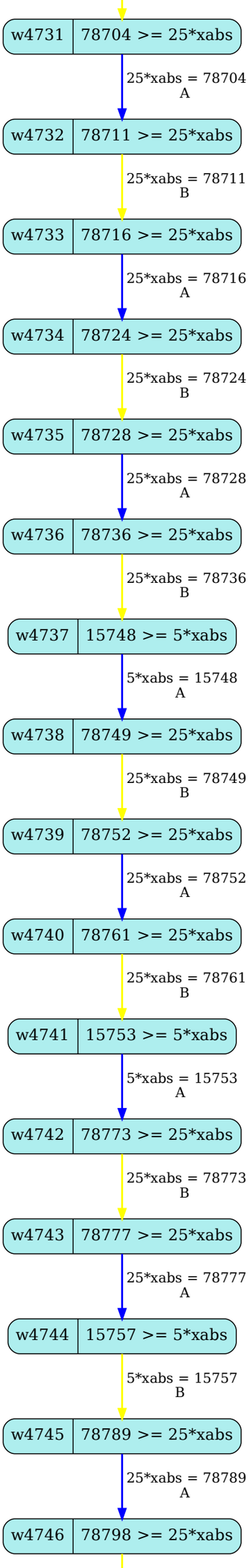
w4731
78704 >= 25*xabs
25*xabs = 78704
A
w4732
78711 >= 25*xabs
25*xabs = 78711
B
w4733
78716 >= 25*xabs
25*xabs = 78716
A
w4734
78724 >= 25*xabs
25*xabs = 78724
B
w4735
78728 >= 25*xabs
25*xabs = 78728
A
w4736
78736 >= 25*xabs
25*xabs = 78736
B
w4737
15748 >= 5*xabs
5*xabs = 15748
A
w4738
78749 >= 25*xabs
25*xabs = 78749
B
w4739
78752 >= 25*xabs
25*xabs = 78752
A
w4740
78761 >= 25*xabs
25*xabs = 78761
B
w4741
15753 >= 5*xabs
5*xabs = 15753
A
w4742
78773 >= 25*xabs
25*xabs = 78773
B
w4743
78777 >= 25*xabs
25*xabs = 78777
A
w4744
15757 >= 5*xabs
5*xabs = 15757
B
w4745
78789 >= 25*xabs
25*xabs = 78789
A
w4746
78798 >= 25*xabs

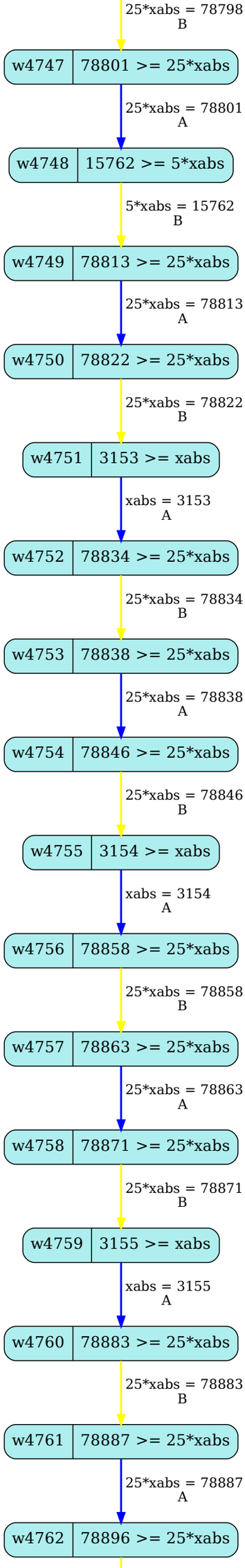
25*xabs = 78798
B
w4747
78801 >= 25*xabs
25*xabs = 78801
A
w4748
15762 >= 5*xabs
5*xabs = 15762
B
w4749
78813 >= 25*xabs
25*xabs = 78813
A
w4750
78822 >= 25*xabs
25*xabs = 78822
B
w4751
3153 >= xabs
xabs = 3153
A
w4752
78834 >= 25*xabs
25*xabs = 78834
B
w4753
78838 >= 25*xabs
25*xabs = 78838
A
w4754
78846 >= 25*xabs
25*xabs = 78846
B
w4755
3154 >= xabs
xabs = 3154
A
w4756
78858 >= 25*xabs
25*xabs = 78858
B
w4757
78863 >= 25*xabs
25*xabs = 78863
A
w4758
78871 >= 25*xabs
25*xabs = 78871
B
w4759
3155 >= xabs
xabs = 3155
A
w4760
78883 >= 25*xabs
25*xabs = 78883
B
w4761
78887 >= 25*xabs
25*xabs = 78887
A
w4762
78896 >= 25*xabs

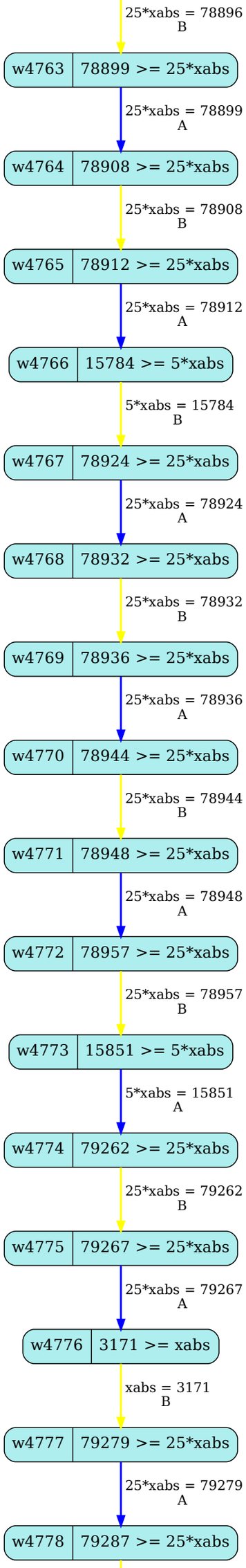
25*xabs = 78896
B
w4763
78899 >= 25*xabs
25*xabs = 78899
A
w4764
78908 >= 25*xabs
25*xabs = 78908
B
w4765
78912 >= 25*xabs
25*xabs = 78912
A
w4766
15784 >= 5*xabs
5*xabs = 15784
B
w4767
78924 >= 25*xabs
25*xabs = 78924
A
w4768
78932 >= 25*xabs
25*xabs = 78932
B
w4769
78936 >= 25*xabs
25*xabs = 78936
A
w4770
78944 >= 25*xabs
25*xabs = 78944
B
w4771
78948 >= 25*xabs
25*xabs = 78948
A
w4772
78957 >= 25*xabs
25*xabs = 78957
B
w4773
15851 >= 5*xabs
5*xabs = 15851
A
w4774
79262 >= 25*xabs
25*xabs = 79262
B
w4775
79267 >= 25*xabs
25*xabs = 79267
A
w4776
3171 >= xabs
xabs = 3171
B
w4777
79279 >= 25*xabs
25*xabs = 79279
A
w4778
79287 >= 25*xabs

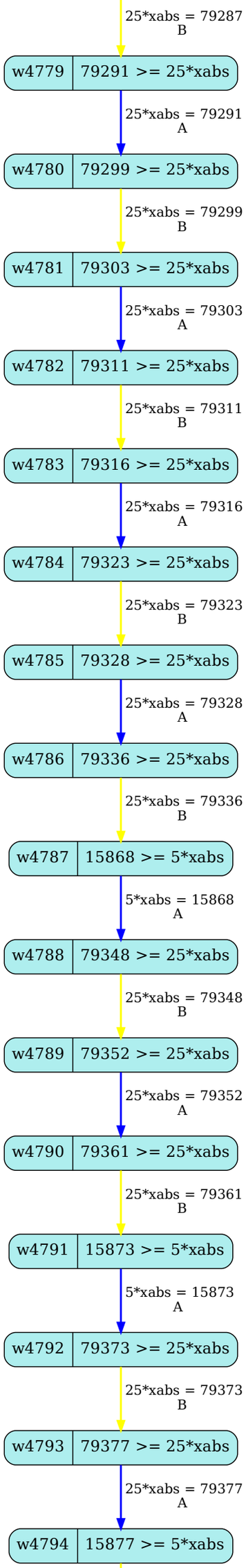
25*xabs = 79287
B
w4779
79291 >= 25*xabs
25*xabs = 79291
A
w4780
79299 >= 25*xabs
25*xabs = 79299
B
w4781
79303 >= 25*xabs
25*xabs = 79303
A
w4782
79311 >= 25*xabs
25*xabs = 79311
B
w4783
79316 >= 25*xabs
25*xabs = 79316
A
w4784
79323 >= 25*xabs
25*xabs = 79323
B
w4785
79328 >= 25*xabs
25*xabs = 79328
A
w4786
79336 >= 25*xabs
25*xabs = 79336
B
w4787
15868 >= 5*xabs
5*xabs = 15868
A
w4788
79348 >= 25*xabs
25*xabs = 79348
B
w4789
79352 >= 25*xabs
25*xabs = 79352
A
w4790
79361 >= 25*xabs
25*xabs = 79361
B
w4791
15873 >= 5*xabs
5*xabs = 15873
A
w4792
79373 >= 25*xabs
25*xabs = 79373
B
w4793
79377 >= 25*xabs
25*xabs = 79377
A
w4794
15877 >= 5*xabs

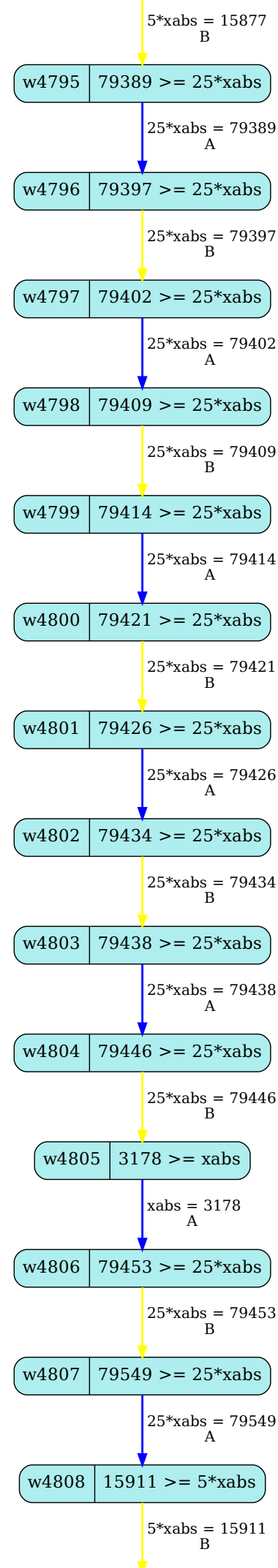
5*xabs = 15877
B
w4795
79389 >= 25*xabs
25*xabs = 79389
A
w4796
79397 >= 25*xabs
25*xabs = 79397
B
w4797
79402 >= 25*xabs
25*xabs = 79402
A
w4798
79409 >= 25*xabs
25*xabs = 79409
B
w4799
79414 >= 25*xabs
25*xabs = 79414
A
w4800
79421 >= 25*xabs
25*xabs = 79421
B
w4801
79426 >= 25*xabs
25*xabs = 79426
A
w4802
79434 >= 25*xabs
25*xabs = 79434
B
w4803
79438 >= 25*xabs
25*xabs = 79438
A
w4804
79446 >= 25*xabs
25*xabs = 79446
B
w4805
3178 >= xabs
xabs = 3178
A
w4806
79453 >= 25*xabs
25*xabs = 79453
B
w4807
79549 >= 25*xabs
25*xabs = 79549
A
w4808
15911 >= 5*xabs
5*xabs = 15911
B

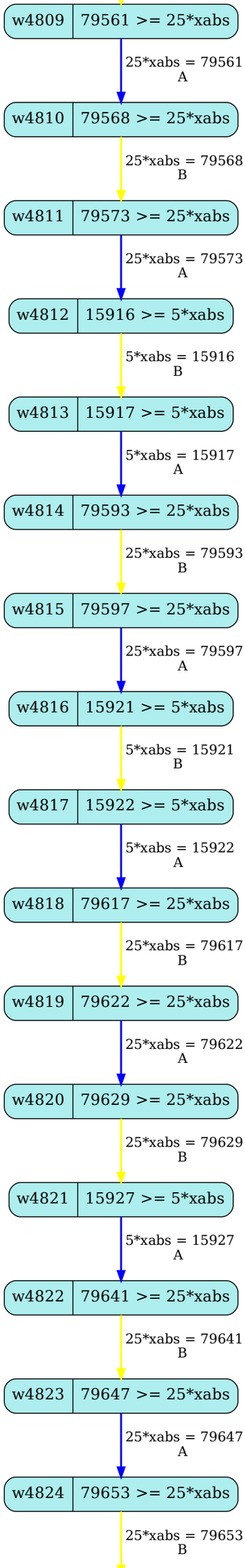
w4809
79561 >= 25*xabs
25*xabs = 79561
A
w4810
79568 >= 25*xabs
25*xabs = 79568
B
w4811
79573 >= 25*xabs
25*xabs = 79573
A
w4812
15916 >= 5*xabs
5*xabs = 15916
B
w4813
15917 >= 5*xabs
5*xabs = 15917
A
w4814
79593 >= 25*xabs
25*xabs = 79593
B
w4815
79597 >= 25*xabs
25*xabs = 79597
A
w4816
15921 >= 5*xabs
5*xabs = 15921
B
w4817
15922 >= 5*xabs
5*xabs = 15922
A
w4818
79617 >= 25*xabs
25*xabs = 79617
B
w4819
79622 >= 25*xabs
25*xabs = 79622
A
w4820
79629 >= 25*xabs
25*xabs = 79629
B
w4821
15927 >= 5*xabs
5*xabs = 15927
A
w4822
79641 >= 25*xabs
25*xabs = 79641
B
w4823
79647 >= 25*xabs
25*xabs = 79647
A
w4824
79653 >= 25*xabs
25*xabs = 79653
B

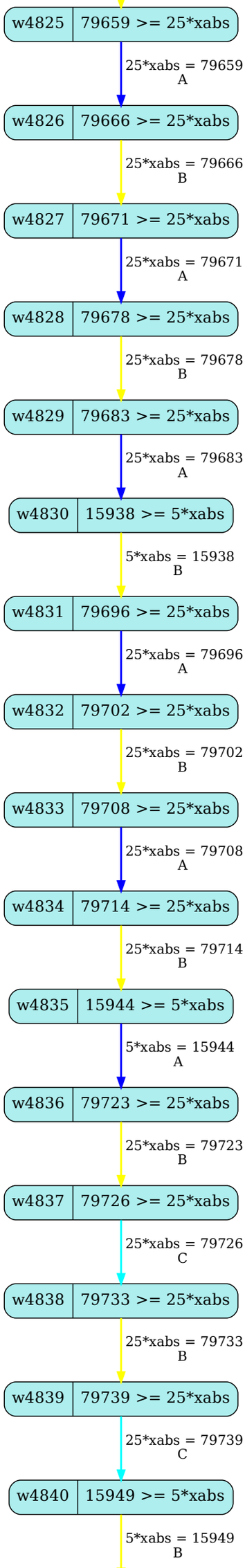
w4825
79659 >= 25*xabs
25*xabs = 79659
A
w4826
79666 >= 25*xabs
25*xabs = 79666
B
w4827
79671 >= 25*xabs
25*xabs = 79671
A
w4828
79678 >= 25*xabs
25*xabs = 79678
B
w4829
79683 >= 25*xabs
25*xabs = 79683
A
w4830
15938 >= 5*xabs
5*xabs = 15938
B
w4831
79696 >= 25*xabs
25*xabs = 79696
A
w4832
79702 >= 25*xabs
25*xabs = 79702
B
w4833
79708 >= 25*xabs
25*xabs = 79708
A
w4834
79714 >= 25*xabs
25*xabs = 79714
B
w4835
15944 >= 5*xabs
5*xabs = 15944
A
w4836
79723 >= 25*xabs
25*xabs = 79723
B
w4837
79726 >= 25*xabs
25*xabs = 79726
C
w4838
79733 >= 25*xabs
25*xabs = 79733
B
w4839
79739 >= 25*xabs
25*xabs = 79739
C
w4840
15949 >= 5*xabs
5*xabs = 15949
B

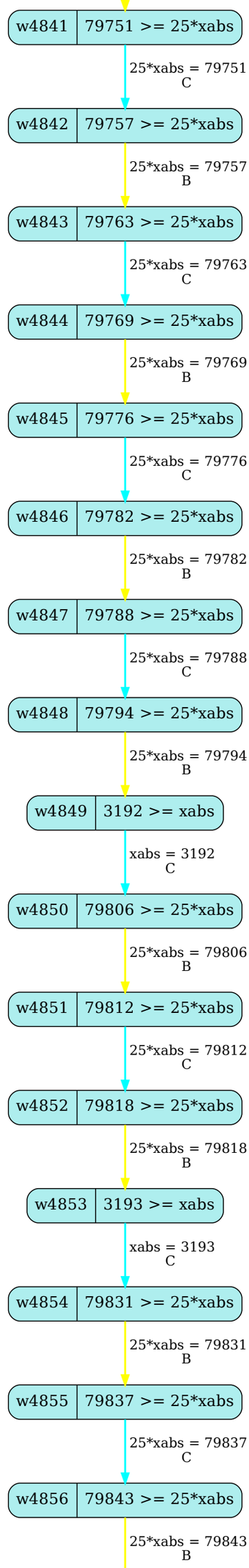
w4841
79751 >= 25*xabs
25*xabs = 79751
C
w4842
79757 >= 25*xabs
25*xabs = 79757
B
w4843
79763 >= 25*xabs
25*xabs = 79763
C
w4844
79769 >= 25*xabs
25*xabs = 79769
B
w4845
79776 >= 25*xabs
25*xabs = 79776
C
w4846
79782 >= 25*xabs
25*xabs = 79782
B
w4847
79788 >= 25*xabs
25*xabs = 79788
C
w4848
79794 >= 25*xabs
25*xabs = 79794
B
w4849
3192 >= xabs
xabs = 3192
C
w4850
79806 >= 25*xabs
25*xabs = 79806
B
w4851
79812 >= 25*xabs
25*xabs = 79812
C
w4852
79818 >= 25*xabs
25*xabs = 79818
B
w4853
3193 >= xabs
xabs = 3193
C
w4854
79831 >= 25*xabs
25*xabs = 79831
B
w4855
79837 >= 25*xabs
25*xabs = 79837
C
w4856
79843 >= 25*xabs
25*xabs = 79843
B

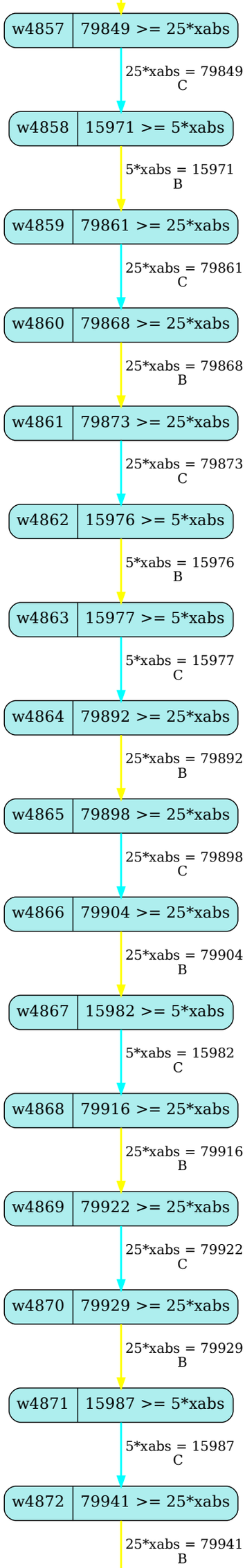
w4857
79849 >= 25*xabs
25*xabs = 79849
C
w4858
15971 >= 5*xabs
5*xabs = 15971
B
w4859
79861 >= 25*xabs
25*xabs = 79861
C
w4860
79868 >= 25*xabs
25*xabs = 79868
B
w4861
79873 >= 25*xabs
25*xabs = 79873
C
w4862
15976 >= 5*xabs
5*xabs = 15976
B
w4863
15977 >= 5*xabs
5*xabs = 15977
C
w4864
79892 >= 25*xabs
25*xabs = 79892
B
w4865
79898 >= 25*xabs
25*xabs = 79898
C
w4866
79904 >= 25*xabs
25*xabs = 79904
B
w4867
15982 >= 5*xabs
5*xabs = 15982
C
w4868
79916 >= 25*xabs
25*xabs = 79916
B
w4869
79922 >= 25*xabs
25*xabs = 79922
C
w4870
79929 >= 25*xabs
25*xabs = 79929
B
w4871
15987 >= 5*xabs
5*xabs = 15987
C
w4872
79941 >= 25*xabs
25*xabs = 79941
B

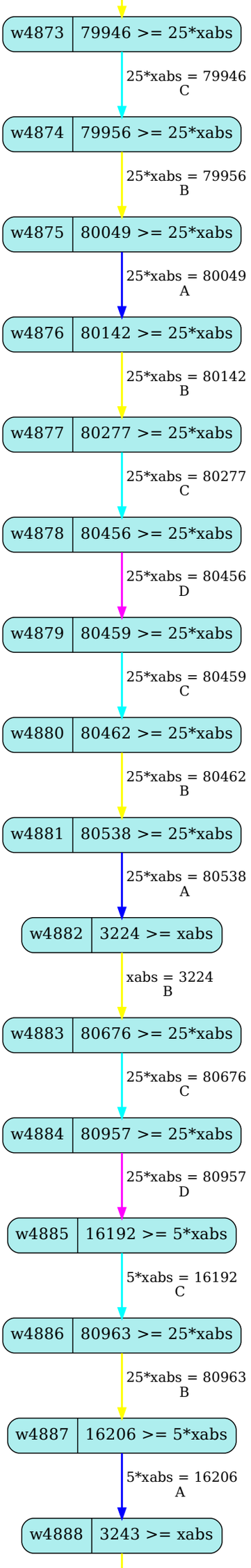
w4873
79946 >= 25*xabs
25*xabs = 79946
C
w4874
79956 >= 25*xabs
25*xabs = 79956
B
w4875
80049 >= 25*xabs
25*xabs = 80049
A
w4876
80142 >= 25*xabs
25*xabs = 80142
B
w4877
80277 >= 25*xabs
25*xabs = 80277
C
w4878
80456 >= 25*xabs
25*xabs = 80456
D
w4879
80459 >= 25*xabs
25*xabs = 80459
C
w4880
80462 >= 25*xabs
25*xabs = 80462
B
w4881
80538 >= 25*xabs
25*xabs = 80538
A
w4882
3224 >= xabs
xabs = 3224
B
w4883
80676 >= 25*xabs
25*xabs = 80676
C
w4884
80957 >= 25*xabs
25*xabs = 80957
D
w4885
16192 >= 5*xabs
5*xabs = 16192
C
w4886
80963 >= 25*xabs
25*xabs = 80963
B
w4887
16206 >= 5*xabs
5*xabs = 16206
A
w4888
3243 >= xabs

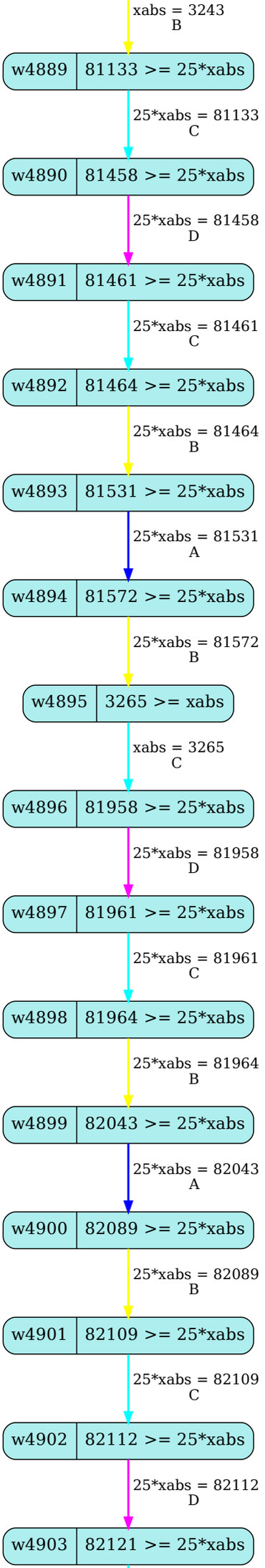
xabs = 3243
B
w4889
81133 >= 25*xabs
25*xabs = 81133
C
w4890
81458 >= 25*xabs
25*xabs = 81458
D
w4891
81461 >= 25*xabs
25*xabs = 81461
C
w4892
81464 >= 25*xabs
25*xabs = 81464
B
w4893
81531 >= 25*xabs
25*xabs = 81531
A
w4894
81572 >= 25*xabs
25*xabs = 81572
B
w4895
3265 >= xabs
xabs = 3265
C
w4896
81958 >= 25*xabs
25*xabs = 81958
D
w4897
81961 >= 25*xabs
25*xabs = 81961
C
w4898
81964 >= 25*xabs
25*xabs = 81964
B
w4899
82043 >= 25*xabs
25*xabs = 82043
A
w4900
82089 >= 25*xabs
25*xabs = 82089
B
w4901
82109 >= 25*xabs
25*xabs = 82109
C
w4902
82112 >= 25*xabs
25*xabs = 82112
D
w4903
82121 >= 25*xabs

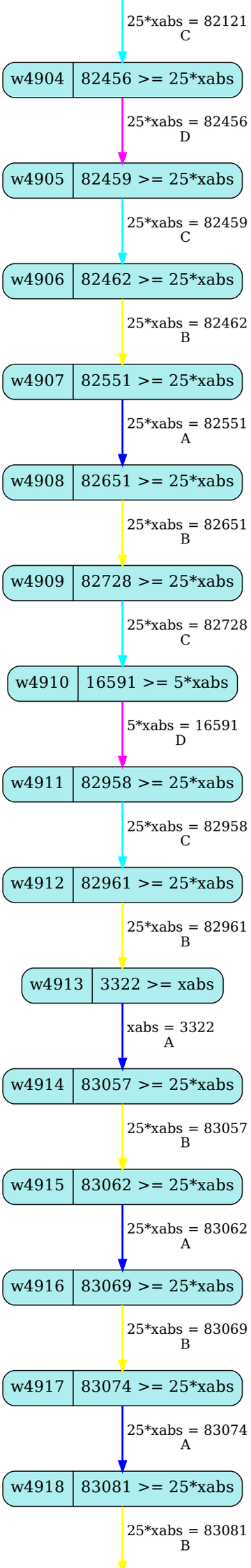
25*xabs = 82121
C
w4904
82456 >= 25*xabs
25*xabs = 82456
D
w4905
82459 >= 25*xabs
25*xabs = 82459
C
w4906
82462 >= 25*xabs
25*xabs = 82462
B
w4907
82551 >= 25*xabs
25*xabs = 82551
A
w4908
82651 >= 25*xabs
25*xabs = 82651
B
w4909
82728 >= 25*xabs
25*xabs = 82728
C
w4910
16591 >= 5*xabs
5*xabs = 16591
D
w4911
82958 >= 25*xabs
25*xabs = 82958
C
w4912
82961 >= 25*xabs
25*xabs = 82961
B
w4913
3322 >= xabs
xabs = 3322
A
w4914
83057 >= 25*xabs
25*xabs = 83057
B
w4915
83062 >= 25*xabs
25*xabs = 83062
A
w4916
83069 >= 25*xabs
25*xabs = 83069
B
w4917
83074 >= 25*xabs
25*xabs = 83074
A
w4918
83081 >= 25*xabs
25*xabs = 83081
B

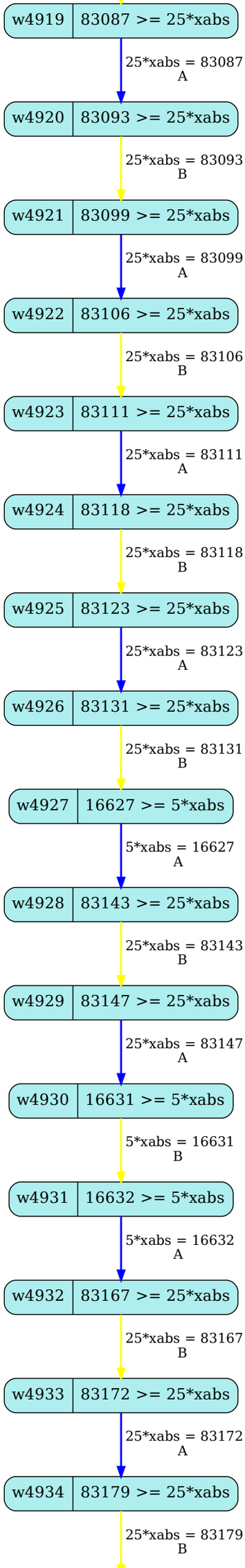
w4919
83087 >= 25*xabs
25*xabs = 83087
A
w4920
83093 >= 25*xabs
25*xabs = 83093
B
w4921
83099 >= 25*xabs
25*xabs = 83099
A
w4922
83106 >= 25*xabs
25*xabs = 83106
B
w4923
83111 >= 25*xabs
25*xabs = 83111
A
w4924
83118 >= 25*xabs
25*xabs = 83118
B
w4925
83123 >= 25*xabs
25*xabs = 83123
A
w4926
83131 >= 25*xabs
25*xabs = 83131
B
w4927
16627 >= 5*xabs
5*xabs = 16627
A
w4928
83143 >= 25*xabs
25*xabs = 83143
B
w4929
83147 >= 25*xabs
25*xabs = 83147
A
w4930
16631 >= 5*xabs
5*xabs = 16631
B
w4931
16632 >= 5*xabs
5*xabs = 16632
A
w4932
83167 >= 25*xabs
25*xabs = 83167
B
w4933
83172 >= 25*xabs
25*xabs = 83172
A
w4934
83179 >= 25*xabs
25*xabs = 83179
B

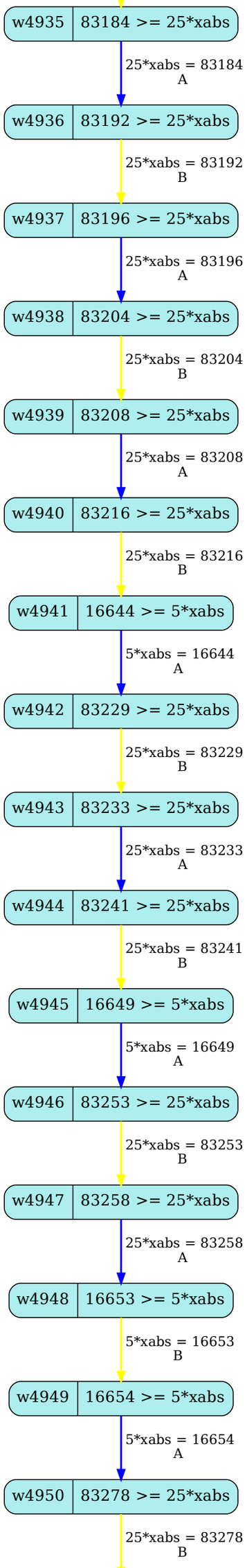
w4935
83184 >= 25*xabs
25*xabs = 83184
A
w4936
83192 >= 25*xabs
25*xabs = 83192
B
w4937
83196 >= 25*xabs
25*xabs = 83196
A
w4938
83204 >= 25*xabs
25*xabs = 83204
B
w4939
83208 >= 25*xabs
25*xabs = 83208
A
w4940
83216 >= 25*xabs
25*xabs = 83216
B
w4941
16644 >= 5*xabs
5*xabs = 16644
A
w4942
83229 >= 25*xabs
25*xabs = 83229
B
w4943
83233 >= 25*xabs
25*xabs = 83233
A
w4944
83241 >= 25*xabs
25*xabs = 83241
B
w4945
16649 >= 5*xabs
5*xabs = 16649
A
w4946
83253 >= 25*xabs
25*xabs = 83253
B
w4947
83258 >= 25*xabs
25*xabs = 83258
A
w4948
16653 >= 5*xabs
5*xabs = 16653
B
w4949
16654 >= 5*xabs
5*xabs = 16654
A
w4950
83278 >= 25*xabs
25*xabs = 83278
B

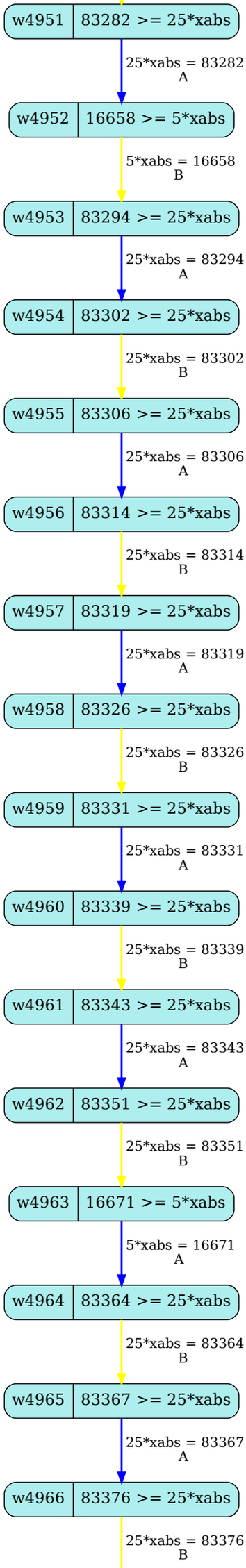
w4951
83282 >= 25*xabs
25*xabs = 83282
A
w4952
16658 >= 5*xabs
5*xabs = 16658
B
w4953
83294 >= 25*xabs
25*xabs = 83294
A
w4954
83302 >= 25*xabs
25*xabs = 83302
B
w4955
83306 >= 25*xabs
25*xabs = 83306
A
w4956
83314 >= 25*xabs
25*xabs = 83314
B
w4957
83319 >= 25*xabs
25*xabs = 83319
A
w4958
83326 >= 25*xabs
25*xabs = 83326
B
w4959
83331 >= 25*xabs
25*xabs = 83331
A
w4960
83339 >= 25*xabs
25*xabs = 83339
B
w4961
83343 >= 25*xabs
25*xabs = 83343
A
w4962
83351 >= 25*xabs
25*xabs = 83351
B
w4963
16671 >= 5*xabs
5*xabs = 16671
A
w4964
83364 >= 25*xabs
25*xabs = 83364
B
w4965
83367 >= 25*xabs
25*xabs = 83367
A
w4966
83376 >= 25*xabs
25*xabs = 83376
B

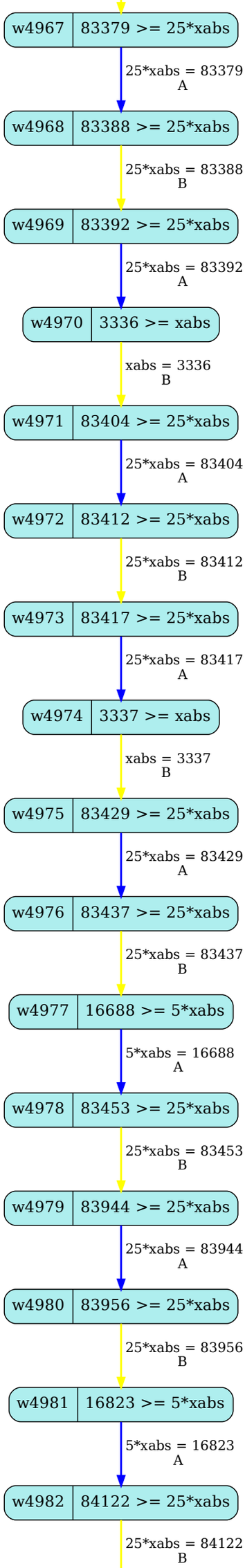
w4967
83379 >= 25*xabs
25*xabs = 83379
A
w4968
83388 >= 25*xabs
25*xabs = 83388
B
w4969
83392 >= 25*xabs
25*xabs = 83392
A
w4970
3336 >= xabs
xabs = 3336
B
w4971
83404 >= 25*xabs
25*xabs = 83404
A
w4972
83412 >= 25*xabs
25*xabs = 83412
B
w4973
83417 >= 25*xabs
25*xabs = 83417
A
w4974
3337 >= xabs
xabs = 3337
B
w4975
83429 >= 25*xabs
25*xabs = 83429
A
w4976
83437 >= 25*xabs
25*xabs = 83437
B
w4977
16688 >= 5*xabs
5*xabs = 16688
A
w4978
83453 >= 25*xabs
25*xabs = 83453
B
w4979
83944 >= 25*xabs
25*xabs = 83944
A
w4980
83956 >= 25*xabs
25*xabs = 83956
B
w4981
16823 >= 5*xabs
5*xabs = 16823
A
w4982
84122 >= 25*xabs
25*xabs = 84122
B

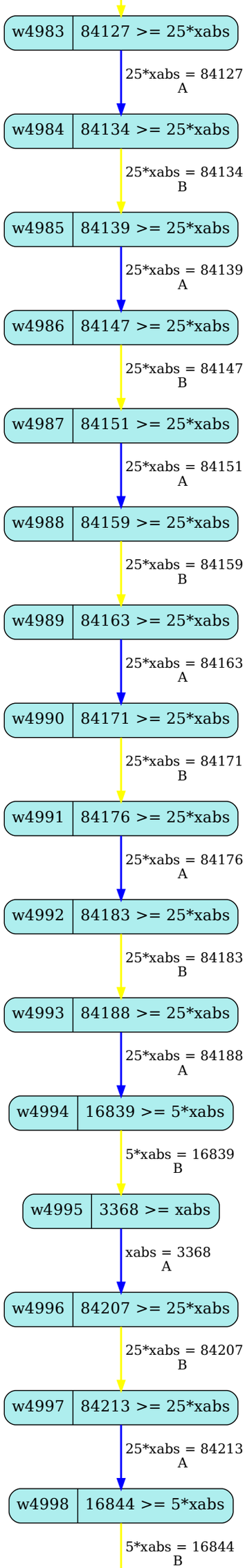
w4983
84127 >= 25*xabs
25*xabs = 84127
A
w4984
84134 >= 25*xabs
25*xabs = 84134
B
w4985
84139 >= 25*xabs
25*xabs = 84139
A
w4986
84147 >= 25*xabs
25*xabs = 84147
B
w4987
84151 >= 25*xabs
25*xabs = 84151
A
w4988
84159 >= 25*xabs
25*xabs = 84159
B
w4989
84163 >= 25*xabs
25*xabs = 84163
A
w4990
84171 >= 25*xabs
25*xabs = 84171
B
w4991
84176 >= 25*xabs
25*xabs = 84176
A
w4992
84183 >= 25*xabs
25*xabs = 84183
B
w4993
84188 >= 25*xabs
25*xabs = 84188
A
w4994
16839 >= 5*xabs
5*xabs = 16839
B
w4995
3368 >= xabs
xabs = 3368
A
w4996
84207 >= 25*xabs
25*xabs = 84207
B
w4997
84213 >= 25*xabs
25*xabs = 84213
A
w4998
16844 >= 5*xabs
5*xabs = 16844
B

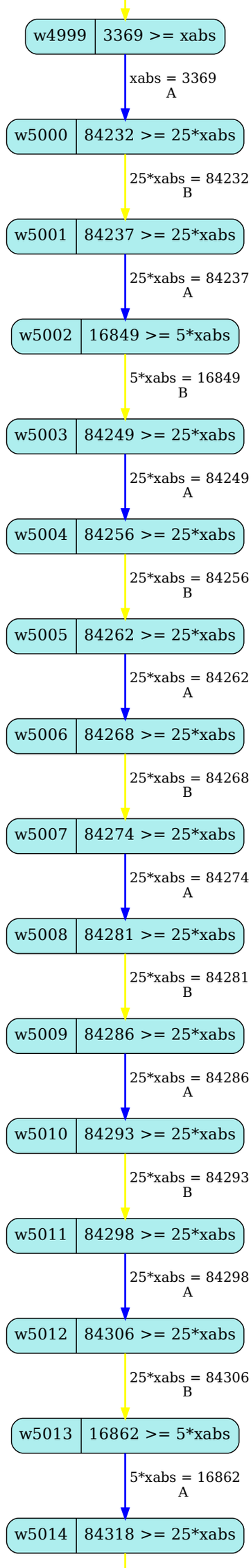
w4999
3369 >= xabs
xabs = 3369
A
w5000
84232 >= 25*xabs
25*xabs = 84232
B
w5001
84237 >= 25*xabs
25*xabs = 84237
A
w5002
16849 >= 5*xabs
5*xabs = 16849
B
w5003
84249 >= 25*xabs
25*xabs = 84249
A
w5004
84256 >= 25*xabs
25*xabs = 84256
B
w5005
84262 >= 25*xabs
25*xabs = 84262
A
w5006
84268 >= 25*xabs
25*xabs = 84268
B
w5007
84274 >= 25*xabs
25*xabs = 84274
A
w5008
84281 >= 25*xabs
25*xabs = 84281
B
w5009
84286 >= 25*xabs
25*xabs = 84286
A
w5010
84293 >= 25*xabs
25*xabs = 84293
B
w5011
84298 >= 25*xabs
25*xabs = 84298
A
w5012
84306 >= 25*xabs
25*xabs = 84306
B
w5013
16862 >= 5*xabs
5*xabs = 16862
A
w5014
84318 >= 25*xabs

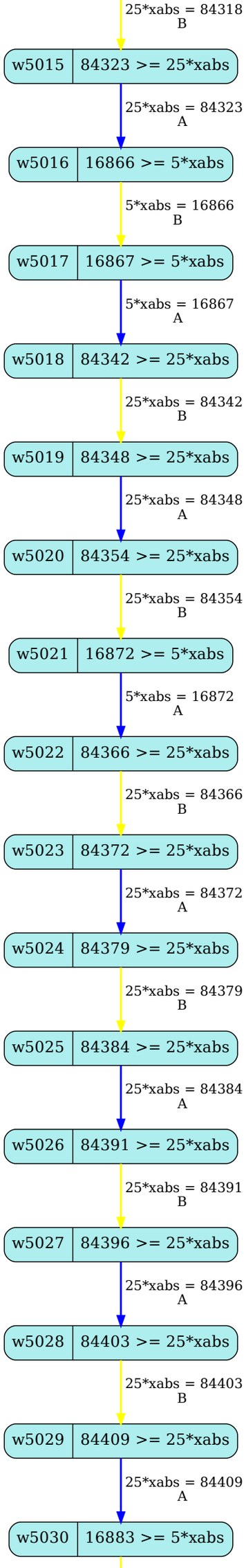
25*xabs = 84318
B
w5015
84323 >= 25*xabs
25*xabs = 84323
A
w5016
16866 >= 5*xabs
5*xabs = 16866
B
w5017
16867 >= 5*xabs
5*xabs = 16867
A
w5018
84342 >= 25*xabs
25*xabs = 84342
B
w5019
84348 >= 25*xabs
25*xabs = 84348
A
w5020
84354 >= 25*xabs
25*xabs = 84354
B
w5021
16872 >= 5*xabs
5*xabs = 16872
A
w5022
84366 >= 25*xabs
25*xabs = 84366
B
w5023
84372 >= 25*xabs
25*xabs = 84372
A
w5024
84379 >= 25*xabs
25*xabs = 84379
B
w5025
84384 >= 25*xabs
25*xabs = 84384
A
w5026
84391 >= 25*xabs
25*xabs = 84391
B
w5027
84396 >= 25*xabs
25*xabs = 84396
A
w5028
84403 >= 25*xabs
25*xabs = 84403
B
w5029
84409 >= 25*xabs
25*xabs = 84409
A
w5030
16883 >= 5*xabs

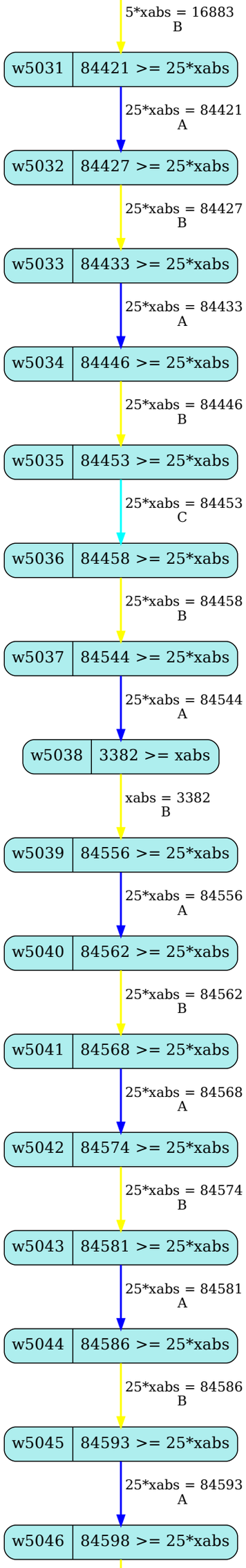
5*xabs = 16883
B
w5031
84421 >= 25*xabs
25*xabs = 84421
A
w5032
84427 >= 25*xabs
25*xabs = 84427
B
w5033
84433 >= 25*xabs
25*xabs = 84433
A
w5034
84446 >= 25*xabs
25*xabs = 84446
B
w5035
84453 >= 25*xabs
25*xabs = 84453
C
w5036
84458 >= 25*xabs
25*xabs = 84458
B
w5037
84544 >= 25*xabs
25*xabs = 84544
A
w5038
3382 >= xabs
xabs = 3382
B
w5039
84556 >= 25*xabs
25*xabs = 84556
A
w5040
84562 >= 25*xabs
25*xabs = 84562
B
w5041
84568 >= 25*xabs
25*xabs = 84568
A
w5042
84574 >= 25*xabs
25*xabs = 84574
B
w5043
84581 >= 25*xabs
25*xabs = 84581
A
w5044
84586 >= 25*xabs
25*xabs = 84586
B
w5045
84593 >= 25*xabs
25*xabs = 84593
A
w5046
84598 >= 25*xabs

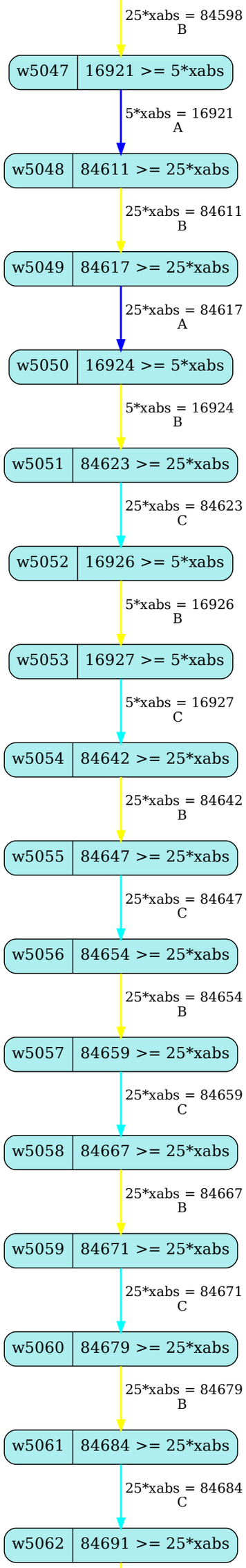
25*xabs = 84598
B
w5047
16921 >= 5*xabs
5*xabs = 16921
A
w5048
84611 >= 25*xabs
25*xabs = 84611
B
w5049
84617 >= 25*xabs
25*xabs = 84617
A
w5050
16924 >= 5*xabs
5*xabs = 16924
B
w5051
84623 >= 25*xabs
25*xabs = 84623
C
w5052
16926 >= 5*xabs
5*xabs = 16926
B
w5053
16927 >= 5*xabs
5*xabs = 16927
C
w5054
84642 >= 25*xabs
25*xabs = 84642
B
w5055
84647 >= 25*xabs
25*xabs = 84647
C
w5056
84654 >= 25*xabs
25*xabs = 84654
B
w5057
84659 >= 25*xabs
25*xabs = 84659
C
w5058
84667 >= 25*xabs
25*xabs = 84667
B
w5059
84671 >= 25*xabs
25*xabs = 84671
C
w5060
84679 >= 25*xabs
25*xabs = 84679
B
w5061
84684 >= 25*xabs
25*xabs = 84684
C
w5062
84691 >= 25*xabs

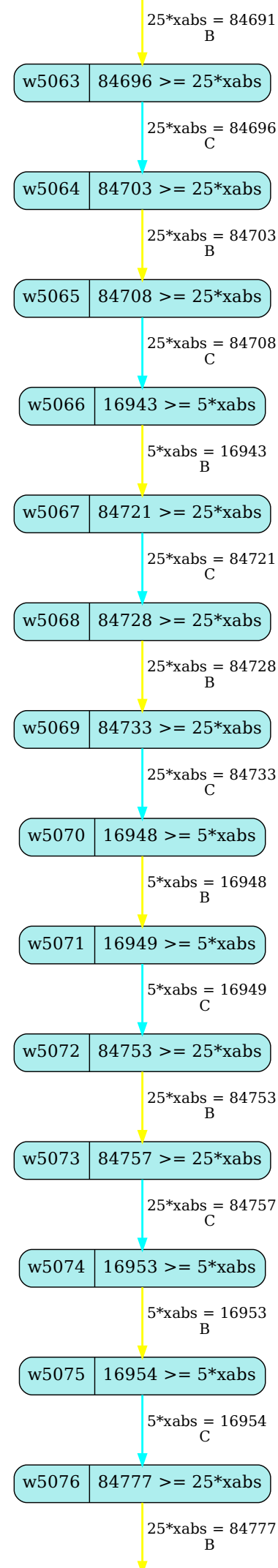
25*xabs = 84691
B
w5063
84696 >= 25*xabs
25*xabs = 84696
C
w5064
84703 >= 25*xabs
25*xabs = 84703
B
w5065
84708 >= 25*xabs
25*xabs = 84708
C
w5066
16943 >= 5*xabs
5*xabs = 16943
B
w5067
84721 >= 25*xabs
25*xabs = 84721
C
w5068
84728 >= 25*xabs
25*xabs = 84728
B
w5069
84733 >= 25*xabs
25*xabs = 84733
C
w5070
16948 >= 5*xabs
5*xabs = 16948
B
w5071
16949 >= 5*xabs
5*xabs = 16949
C
w5072
84753 >= 25*xabs
25*xabs = 84753
B
w5073
84757 >= 25*xabs
25*xabs = 84757
C
w5074
16953 >= 5*xabs
5*xabs = 16953
B
w5075
16954 >= 5*xabs
5*xabs = 16954
C
w5076
84777 >= 25*xabs
25*xabs = 84777
B

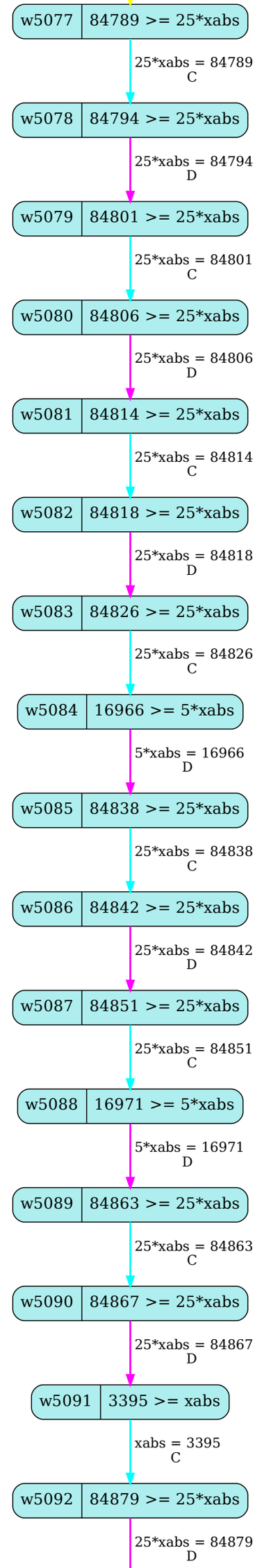
w5077
84789 >= 25*xabs
25*xabs = 84789
C
w5078
84794 >= 25*xabs
25*xabs = 84794
D
w5079
84801 >= 25*xabs
25*xabs = 84801
C
w5080
84806 >= 25*xabs
25*xabs = 84806
D
w5081
84814 >= 25*xabs
25*xabs = 84814
C
w5082
84818 >= 25*xabs
25*xabs = 84818
D
w5083
84826 >= 25*xabs
25*xabs = 84826
C
w5084
16966 >= 5*xabs
5*xabs = 16966
D
w5085
84838 >= 25*xabs
25*xabs = 84838
C
w5086
84842 >= 25*xabs
25*xabs = 84842
D
w5087
84851 >= 25*xabs
25*xabs = 84851
C
w5088
16971 >= 5*xabs
5*xabs = 16971
D
w5089
84863 >= 25*xabs
25*xabs = 84863
C
w5090
84867 >= 25*xabs
25*xabs = 84867
D
w5091
3395 >= xabs
xabs = 3395
C
w5092
84879 >= 25*xabs
25*xabs = 84879
D

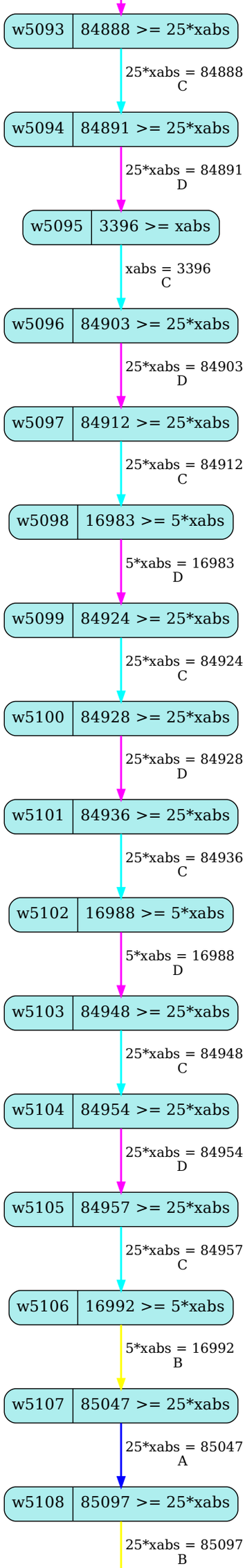
w5093
84888 >= 25*xabs
25*xabs = 84888
C
w5094
84891 >= 25*xabs
25*xabs = 84891
D
w5095
3396 >= xabs
xabs = 3396
C
w5096
84903 >= 25*xabs
25*xabs = 84903
D
w5097
84912 >= 25*xabs
25*xabs = 84912
C
w5098
16983 >= 5*xabs
5*xabs = 16983
D
w5099
84924 >= 25*xabs
25*xabs = 84924
C
w5100
84928 >= 25*xabs
25*xabs = 84928
D
w5101
84936 >= 25*xabs
25*xabs = 84936
C
w5102
16988 >= 5*xabs
5*xabs = 16988
D
w5103
84948 >= 25*xabs
25*xabs = 84948
C
w5104
84954 >= 25*xabs
25*xabs = 84954
D
w5105
84957 >= 25*xabs
25*xabs = 84957
C
w5106
16992 >= 5*xabs
5*xabs = 16992
B
w5107
85047 >= 25*xabs
25*xabs = 85047
A
w5108
85097 >= 25*xabs
25*xabs = 85097
B

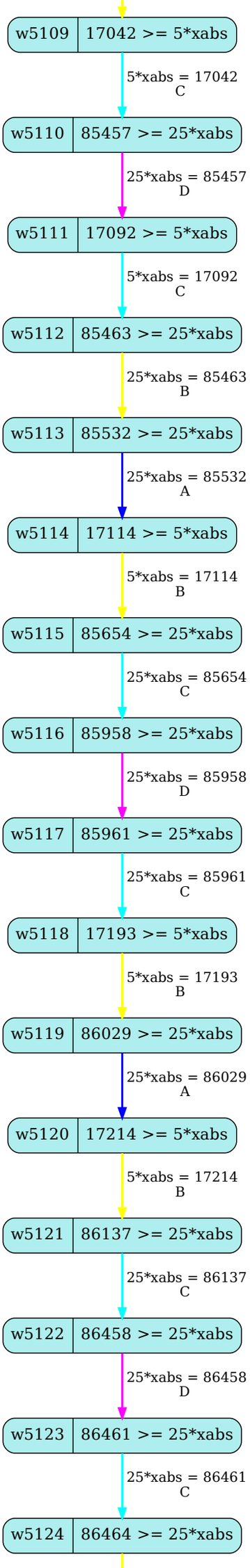
w5109
17042 >= 5*xabs
5*xabs = 17042
C
w5110
85457 >= 25*xabs
25*xabs = 85457
D
w5111
17092 >= 5*xabs
5*xabs = 17092
C
w5112
85463 >= 25*xabs
25*xabs = 85463
B
w5113
85532 >= 25*xabs
25*xabs = 85532
A
w5114
17114 >= 5*xabs
5*xabs = 17114
B
w5115
85654 >= 25*xabs
25*xabs = 85654
C
w5116
85958 >= 25*xabs
25*xabs = 85958
D
w5117
85961 >= 25*xabs
25*xabs = 85961
C
w5118
17193 >= 5*xabs
5*xabs = 17193
B
w5119
86029 >= 25*xabs
25*xabs = 86029
A
w5120
17214 >= 5*xabs
5*xabs = 17214
B
w5121
86137 >= 25*xabs
25*xabs = 86137
C
w5122
86458 >= 25*xabs
25*xabs = 86458
D
w5123
86461 >= 25*xabs
25*xabs = 86461
C
w5124
86464 >= 25*xabs

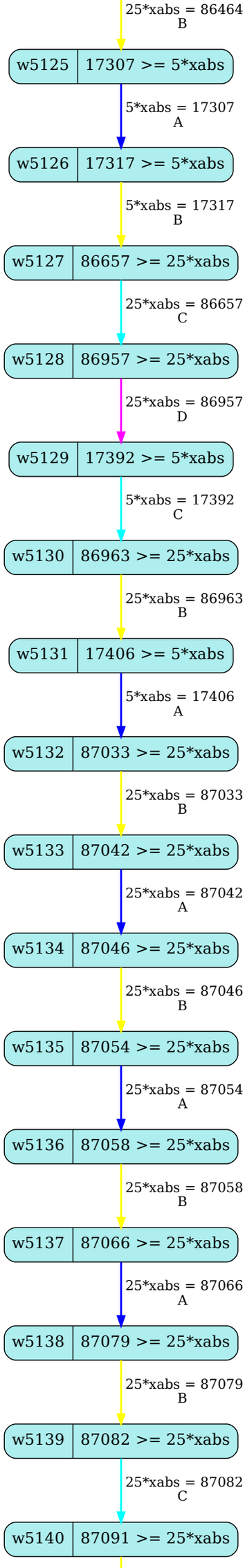
25*xabs = 86464
B
w5125
17307 >= 5*xabs
5*xabs = 17307
A
w5126
17317 >= 5*xabs
5*xabs = 17317
B
w5127
86657 >= 25*xabs
25*xabs = 86657
C
w5128
86957 >= 25*xabs
25*xabs = 86957
D
w5129
17392 >= 5*xabs
5*xabs = 17392
C
w5130
86963 >= 25*xabs
25*xabs = 86963
B
w5131
17406 >= 5*xabs
5*xabs = 17406
A
w5132
87033 >= 25*xabs
25*xabs = 87033
B
w5133
87042 >= 25*xabs
25*xabs = 87042
A
w5134
87046 >= 25*xabs
25*xabs = 87046
B
w5135
87054 >= 25*xabs
25*xabs = 87054
A
w5136
87058 >= 25*xabs
25*xabs = 87058
B
w5137
87066 >= 25*xabs
25*xabs = 87066
A
w5138
87079 >= 25*xabs
25*xabs = 87079
B
w5139
87082 >= 25*xabs
25*xabs = 87082
C
w5140
87091 >= 25*xabs

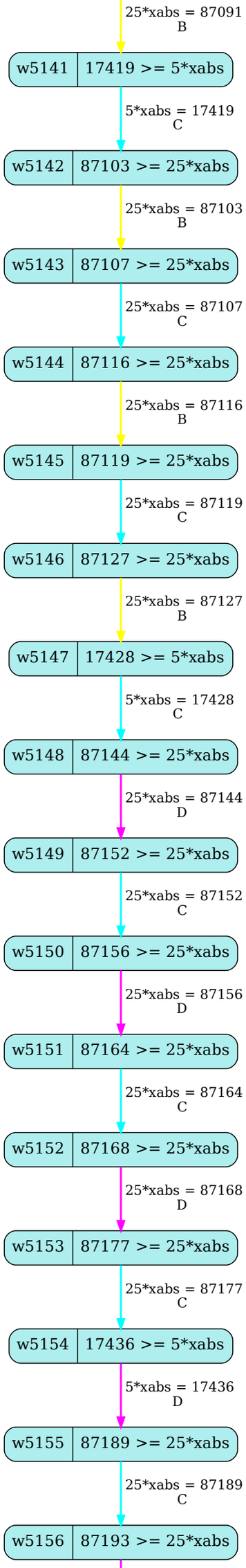
25*xabs = 87091
B
w5141
17419 >= 5*xabs
5*xabs = 17419
C
w5142
87103 >= 25*xabs
25*xabs = 87103
B
w5143
87107 >= 25*xabs
25*xabs = 87107
C
w5144
87116 >= 25*xabs
25*xabs = 87116
B
w5145
87119 >= 25*xabs
25*xabs = 87119
C
w5146
87127 >= 25*xabs
25*xabs = 87127
B
w5147
17428 >= 5*xabs
5*xabs = 17428
C
w5148
87144 >= 25*xabs
25*xabs = 87144
D
w5149
87152 >= 25*xabs
25*xabs = 87152
C
w5150
87156 >= 25*xabs
25*xabs = 87156
D
w5151
87164 >= 25*xabs
25*xabs = 87164
C
w5152
87168 >= 25*xabs
25*xabs = 87168
D
w5153
87177 >= 25*xabs
25*xabs = 87177
C
w5154
17436 >= 5*xabs
5*xabs = 17436
D
w5155
87189 >= 25*xabs
25*xabs = 87189
C
w5156
87193 >= 25*xabs

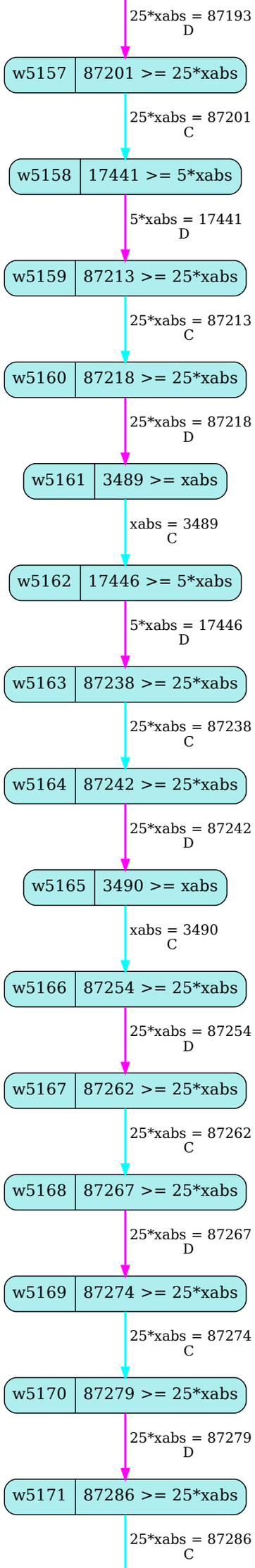
25*xabs = 87193
D
w5157
87201 >= 25*xabs
25*xabs = 87201
C
w5158
17441 >= 5*xabs
5*xabs = 17441
D
w5159
87213 >= 25*xabs
25*xabs = 87213
C
w5160
87218 >= 25*xabs
25*xabs = 87218
D
w5161
3489 >= xabs
xabs = 3489
C
w5162
17446 >= 5*xabs
5*xabs = 17446
D
w5163
87238 >= 25*xabs
25*xabs = 87238
C
w5164
87242 >= 25*xabs
25*xabs = 87242
D
w5165
3490 >= xabs
xabs = 3490
C
w5166
87254 >= 25*xabs
25*xabs = 87254
D
w5167
87262 >= 25*xabs
25*xabs = 87262
C
w5168
87267 >= 25*xabs
25*xabs = 87267
D
w5169
87274 >= 25*xabs
25*xabs = 87274
C
w5170
87279 >= 25*xabs
25*xabs = 87279
D
w5171
87286 >= 25*xabs
25*xabs = 87286
C

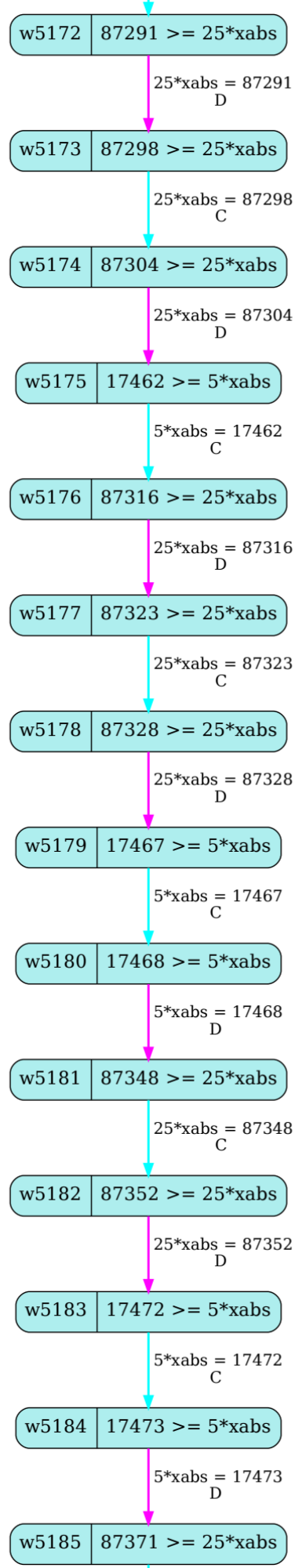
w5172
87291 >= 25*xabs
25*xabs = 87291
D
w5173
87298 >= 25*xabs
25*xabs = 87298
C
w5174
87304 >= 25*xabs
25*xabs = 87304
D
w5175
17462 >= 5*xabs
5*xabs = 17462
C
w5176
87316 >= 25*xabs
25*xabs = 87316
D
w5177
87323 >= 25*xabs
25*xabs = 87323
C
w5178
87328 >= 25*xabs
25*xabs = 87328
D
w5179
17467 >= 5*xabs
5*xabs = 17467
C
w5180
17468 >= 5*xabs
5*xabs = 17468
D
w5181
87348 >= 25*xabs
25*xabs = 87348
C
w5182
87352 >= 25*xabs
25*xabs = 87352
D
w5183
17472 >= 5*xabs
5*xabs = 17472
C
w5184
17473 >= 5*xabs
5*xabs = 17473
D
w5185
87371 >= 25*xabs

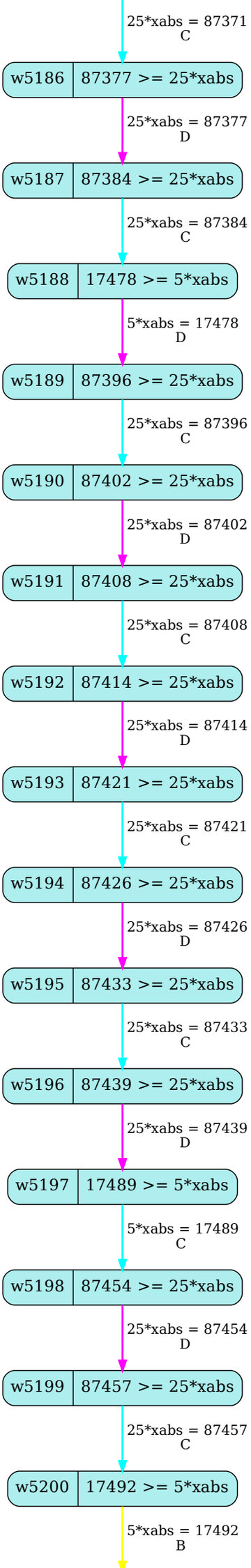
25*xabs = 87371
C
w5186
87377 >= 25*xabs
25*xabs = 87377
D
w5187
87384 >= 25*xabs
25*xabs = 87384
C
w5188
17478 >= 5*xabs
5*xabs = 17478
D
w5189
87396 >= 25*xabs
25*xabs = 87396
C
w5190
87402 >= 25*xabs
25*xabs = 87402
D
w5191
87408 >= 25*xabs
25*xabs = 87408
C
w5192
87414 >= 25*xabs
25*xabs = 87414
D
w5193
87421 >= 25*xabs
25*xabs = 87421
C
w5194
87426 >= 25*xabs
25*xabs = 87426
D
w5195
87433 >= 25*xabs
25*xabs = 87433
C
w5196
87439 >= 25*xabs
25*xabs = 87439
D
w5197
17489 >= 5*xabs
5*xabs = 17489
C
w5198
87454 >= 25*xabs
25*xabs = 87454
D
w5199
87457 >= 25*xabs
25*xabs = 87457
C
w5200
17492 >= 5*xabs
5*xabs = 17492
B

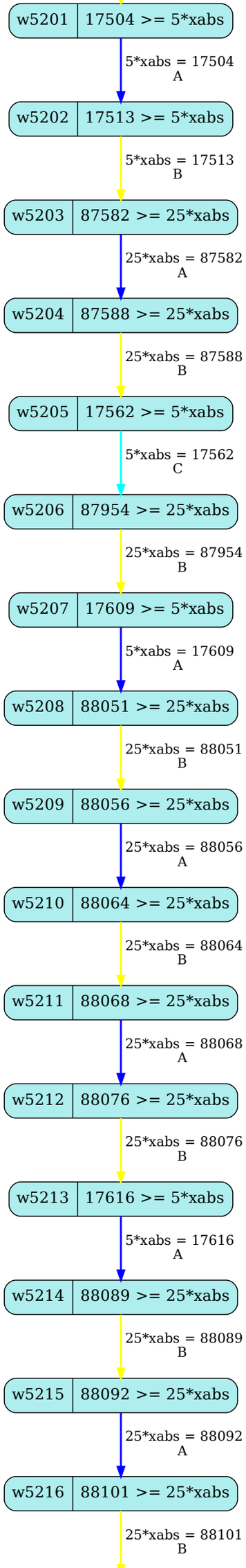
w5201
17504 >= 5*xabs
5*xabs = 17504
A
w5202
17513 >= 5*xabs
5*xabs = 17513
B
w5203
87582 >= 25*xabs
25*xabs = 87582
A
w5204
87588 >= 25*xabs
25*xabs = 87588
B
w5205
17562 >= 5*xabs
5*xabs = 17562
C
w5206
87954 >= 25*xabs
25*xabs = 87954
B
w5207
17609 >= 5*xabs
5*xabs = 17609
A
w5208
88051 >= 25*xabs
25*xabs = 88051
B
w5209
88056 >= 25*xabs
25*xabs = 88056
A
w5210
88064 >= 25*xabs
25*xabs = 88064
B
w5211
88068 >= 25*xabs
25*xabs = 88068
A
w5212
88076 >= 25*xabs
25*xabs = 88076
B
w5213
17616 >= 5*xabs
5*xabs = 17616
A
w5214
88089 >= 25*xabs
25*xabs = 88089
B
w5215
88092 >= 25*xabs
25*xabs = 88092
A
w5216
88101 >= 25*xabs
25*xabs = 88101
B

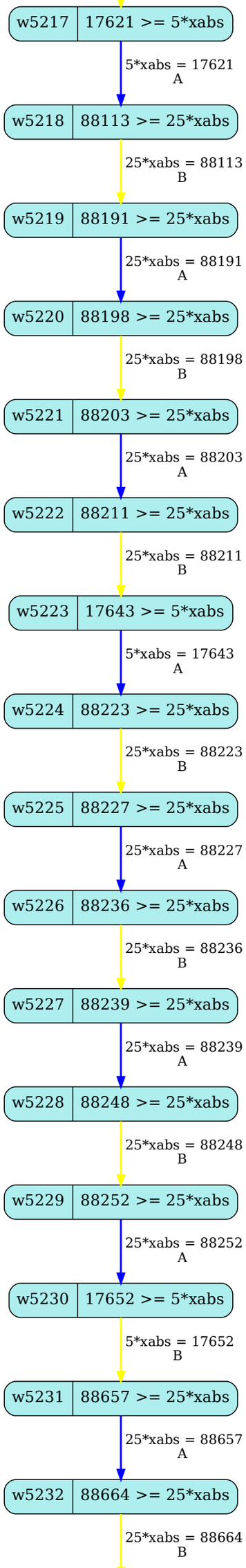
w5217
17621 >= 5*xabs
5*xabs = 17621
A
w5218
88113 >= 25*xabs
25*xabs = 88113
B
w5219
88191 >= 25*xabs
25*xabs = 88191
A
w5220
88198 >= 25*xabs
25*xabs = 88198
B
w5221
88203 >= 25*xabs
25*xabs = 88203
A
w5222
88211 >= 25*xabs
25*xabs = 88211
B
w5223
17643 >= 5*xabs
5*xabs = 17643
A
w5224
88223 >= 25*xabs
25*xabs = 88223
B
w5225
88227 >= 25*xabs
25*xabs = 88227
A
w5226
88236 >= 25*xabs
25*xabs = 88236
B
w5227
88239 >= 25*xabs
25*xabs = 88239
A
w5228
88248 >= 25*xabs
25*xabs = 88248
B
w5229
88252 >= 25*xabs
25*xabs = 88252
A
w5230
17652 >= 5*xabs
5*xabs = 17652
B
w5231
88657 >= 25*xabs
25*xabs = 88657
A
w5232
88664 >= 25*xabs
25*xabs = 88664
B

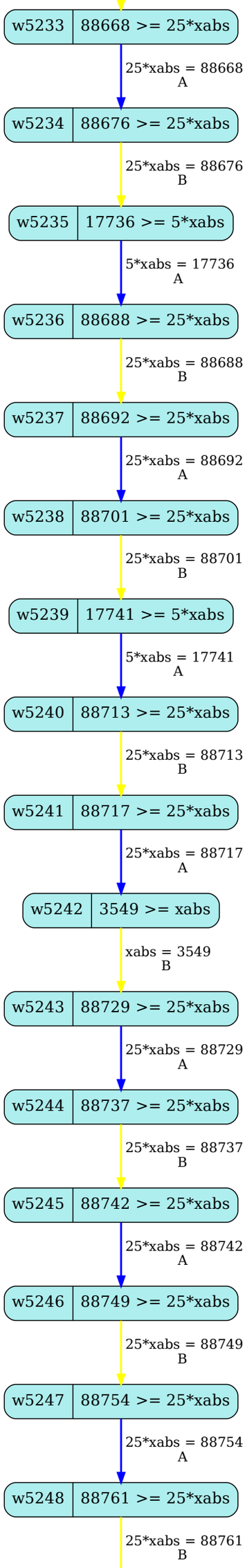
w5233
88668 >= 25*xabs
25*xabs = 88668
A
w5234
88676 >= 25*xabs
25*xabs = 88676
B
w5235
17736 >= 5*xabs
5*xabs = 17736
A
w5236
88688 >= 25*xabs
25*xabs = 88688
B
w5237
88692 >= 25*xabs
25*xabs = 88692
A
w5238
88701 >= 25*xabs
25*xabs = 88701
B
w5239
17741 >= 5*xabs
5*xabs = 17741
A
w5240
88713 >= 25*xabs
25*xabs = 88713
B
w5241
88717 >= 25*xabs
25*xabs = 88717
A
w5242
3549 >= xabs
xabs = 3549
B
w5243
88729 >= 25*xabs
25*xabs = 88729
A
w5244
88737 >= 25*xabs
25*xabs = 88737
B
w5245
88742 >= 25*xabs
25*xabs = 88742
A
w5246
88749 >= 25*xabs
25*xabs = 88749
B
w5247
88754 >= 25*xabs
25*xabs = 88754
A
w5248
88761 >= 25*xabs
25*xabs = 88761
B

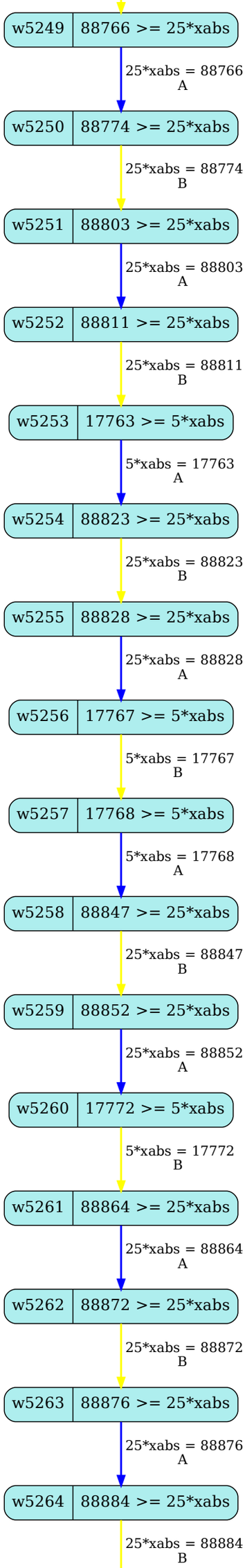
w5249
88766 >= 25*xabs
25*xabs = 88766
A
w5250
88774 >= 25*xabs
25*xabs = 88774
B
w5251
88803 >= 25*xabs
25*xabs = 88803
A
w5252
88811 >= 25*xabs
25*xabs = 88811
B
w5253
17763 >= 5*xabs
5*xabs = 17763
A
w5254
88823 >= 25*xabs
25*xabs = 88823
B
w5255
88828 >= 25*xabs
25*xabs = 88828
A
w5256
17767 >= 5*xabs
5*xabs = 17767
B
w5257
17768 >= 5*xabs
5*xabs = 17768
A
w5258
88847 >= 25*xabs
25*xabs = 88847
B
w5259
88852 >= 25*xabs
25*xabs = 88852
A
w5260
17772 >= 5*xabs
5*xabs = 17772
B
w5261
88864 >= 25*xabs
25*xabs = 88864
A
w5262
88872 >= 25*xabs
25*xabs = 88872
B
w5263
88876 >= 25*xabs
25*xabs = 88876
A
w5264
88884 >= 25*xabs
25*xabs = 88884
B

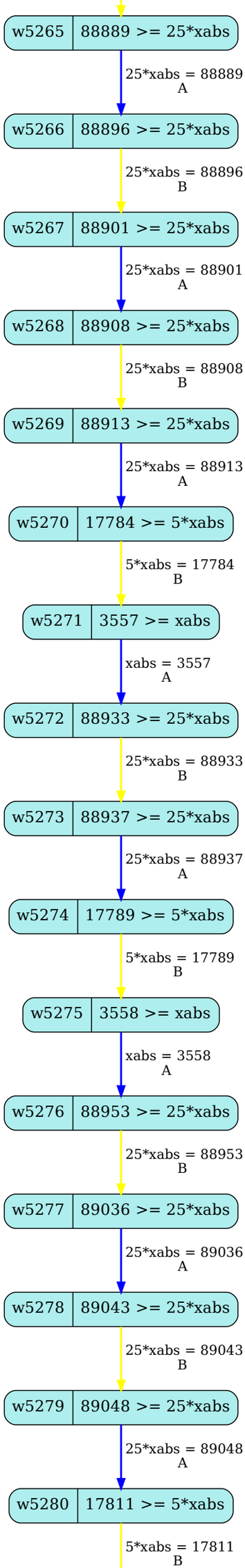
w5265
88889 >= 25*xabs
25*xabs = 88889
A
w5266
88896 >= 25*xabs
25*xabs = 88896
B
w5267
88901 >= 25*xabs
25*xabs = 88901
A
w5268
88908 >= 25*xabs
25*xabs = 88908
B
w5269
88913 >= 25*xabs
25*xabs = 88913
A
w5270
17784 >= 5*xabs
5*xabs = 17784
B
w5271
3557 >= xabs
xabs = 3557
A
w5272
88933 >= 25*xabs
25*xabs = 88933
B
w5273
88937 >= 25*xabs
25*xabs = 88937
A
w5274
17789 >= 5*xabs
5*xabs = 17789
B
w5275
3558 >= xabs
xabs = 3558
A
w5276
88953 >= 25*xabs
25*xabs = 88953
B
w5277
89036 >= 25*xabs
25*xabs = 89036
A
w5278
89043 >= 25*xabs
25*xabs = 89043
B
w5279
89048 >= 25*xabs
25*xabs = 89048
A
w5280
17811 >= 5*xabs
5*xabs = 17811
B

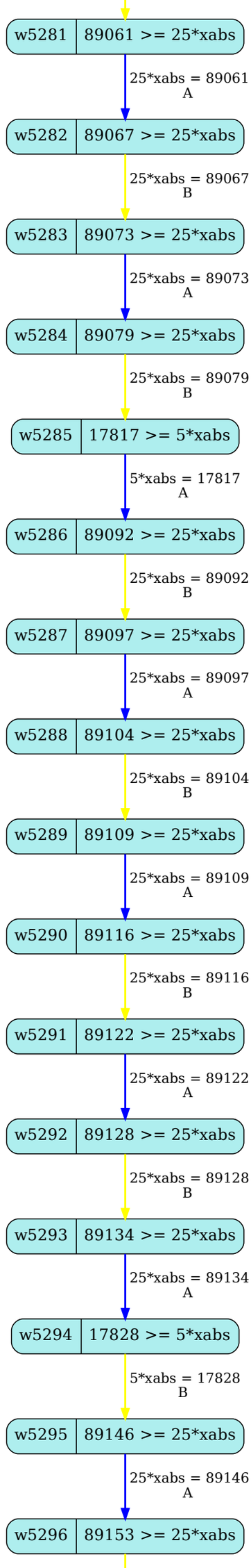
w5281
89061 >= 25*xabs
25*xabs = 89061
A
w5282
89067 >= 25*xabs
25*xabs = 89067
B
w5283
89073 >= 25*xabs
25*xabs = 89073
A
w5284
89079 >= 25*xabs
25*xabs = 89079
B
w5285
17817 >= 5*xabs
5*xabs = 17817
A
w5286
89092 >= 25*xabs
25*xabs = 89092
B
w5287
89097 >= 25*xabs
25*xabs = 89097
A
w5288
89104 >= 25*xabs
25*xabs = 89104
B
w5289
89109 >= 25*xabs
25*xabs = 89109
A
w5290
89116 >= 25*xabs
25*xabs = 89116
B
w5291
89122 >= 25*xabs
25*xabs = 89122
A
w5292
89128 >= 25*xabs
25*xabs = 89128
B
w5293
89134 >= 25*xabs
25*xabs = 89134
A
w5294
17828 >= 5*xabs
5*xabs = 17828
B
w5295
89146 >= 25*xabs
25*xabs = 89146
A
w5296
89153 >= 25*xabs

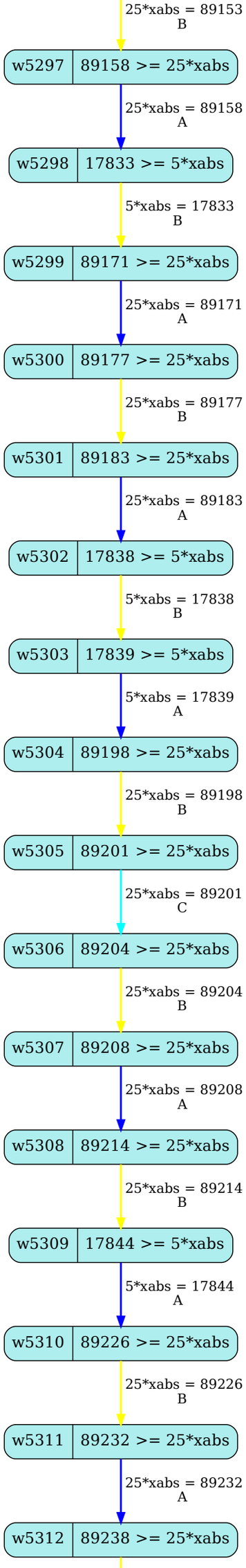
25*xabs = 89153
B
w5297
89158 >= 25*xabs
25*xabs = 89158
A
w5298
17833 >= 5*xabs
5*xabs = 17833
B
w5299
89171 >= 25*xabs
25*xabs = 89171
A
w5300
89177 >= 25*xabs
25*xabs = 89177
B
w5301
89183 >= 25*xabs
25*xabs = 89183
A
w5302
17838 >= 5*xabs
5*xabs = 17838
B
w5303
17839 >= 5*xabs
5*xabs = 17839
A
w5304
89198 >= 25*xabs
25*xabs = 89198
B
w5305
89201 >= 25*xabs
25*xabs = 89201
C
w5306
89204 >= 25*xabs
25*xabs = 89204
B
w5307
89208 >= 25*xabs
25*xabs = 89208
A
w5308
89214 >= 25*xabs
25*xabs = 89214
B
w5309
17844 >= 5*xabs
5*xabs = 17844
A
w5310
89226 >= 25*xabs
25*xabs = 89226
B
w5311
89232 >= 25*xabs
25*xabs = 89232
A
w5312
89238 >= 25*xabs

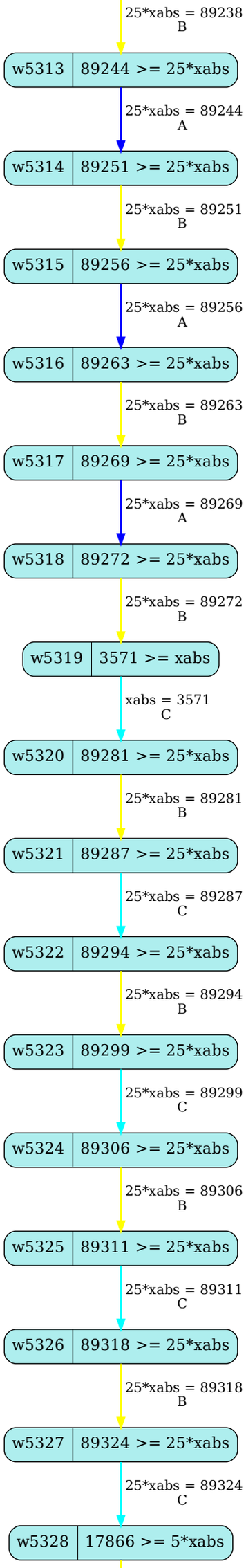
25*xabs = 89238
B
w5313
89244 >= 25*xabs
25*xabs = 89244
A
w5314
89251 >= 25*xabs
25*xabs = 89251
B
w5315
89256 >= 25*xabs
25*xabs = 89256
A
w5316
89263 >= 25*xabs
25*xabs = 89263
B
w5317
89269 >= 25*xabs
25*xabs = 89269
A
w5318
89272 >= 25*xabs
25*xabs = 89272
B
w5319
3571 >= xabs
xabs = 3571
C
w5320
89281 >= 25*xabs
25*xabs = 89281
B
w5321
89287 >= 25*xabs
25*xabs = 89287
C
w5322
89294 >= 25*xabs
25*xabs = 89294
B
w5323
89299 >= 25*xabs
25*xabs = 89299
C
w5324
89306 >= 25*xabs
25*xabs = 89306
B
w5325
89311 >= 25*xabs
25*xabs = 89311
C
w5326
89318 >= 25*xabs
25*xabs = 89318
B
w5327
89324 >= 25*xabs
25*xabs = 89324
C
w5328
17866 >= 5*xabs

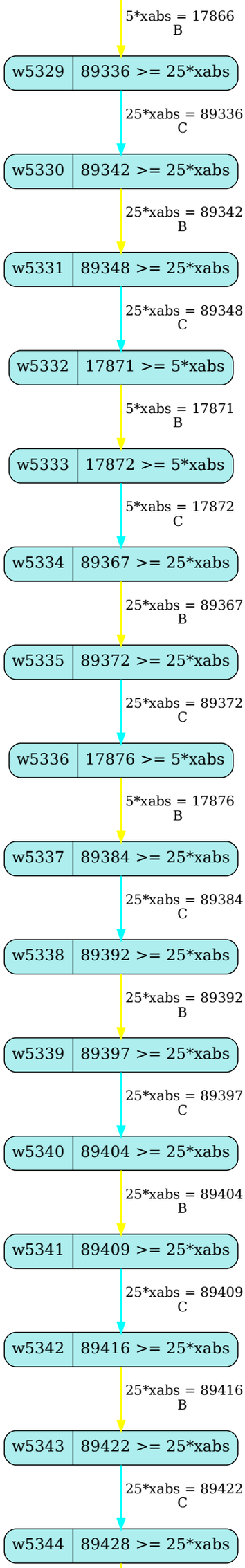
5*xabs = 17866
B
w5329
89336 >= 25*xabs
25*xabs = 89336
C
w5330
89342 >= 25*xabs
25*xabs = 89342
B
w5331
89348 >= 25*xabs
25*xabs = 89348
C
w5332
17871 >= 5*xabs
5*xabs = 17871
B
w5333
17872 >= 5*xabs
5*xabs = 17872
C
w5334
89367 >= 25*xabs
25*xabs = 89367
B
w5335
89372 >= 25*xabs
25*xabs = 89372
C
w5336
17876 >= 5*xabs
5*xabs = 17876
B
w5337
89384 >= 25*xabs
25*xabs = 89384
C
w5338
89392 >= 25*xabs
25*xabs = 89392
B
w5339
89397 >= 25*xabs
25*xabs = 89397
C
w5340
89404 >= 25*xabs
25*xabs = 89404
B
w5341
89409 >= 25*xabs
25*xabs = 89409
C
w5342
89416 >= 25*xabs
25*xabs = 89416
B
w5343
89422 >= 25*xabs
25*xabs = 89422
C
w5344
89428 >= 25*xabs

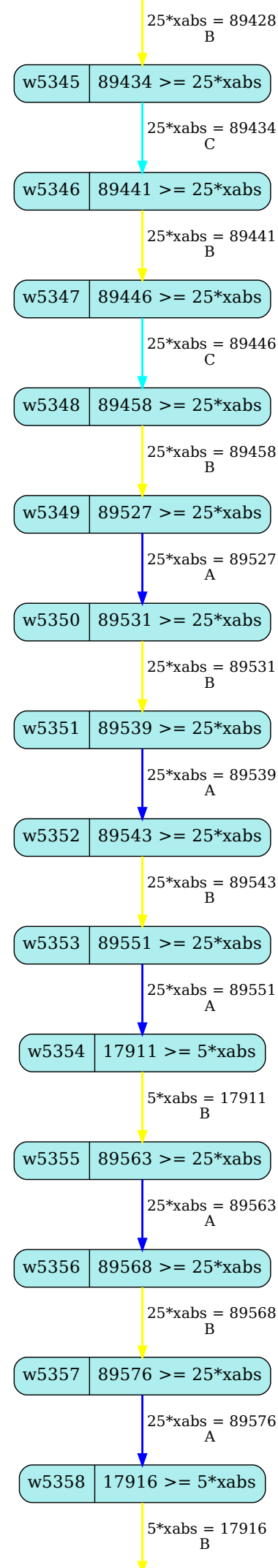
25*xabs = 89428
B
w5345
89434 >= 25*xabs
25*xabs = 89434
C
w5346
89441 >= 25*xabs
25*xabs = 89441
B
w5347
89446 >= 25*xabs
25*xabs = 89446
C
w5348
89458 >= 25*xabs
25*xabs = 89458
B
w5349
89527 >= 25*xabs
25*xabs = 89527
A
w5350
89531 >= 25*xabs
25*xabs = 89531
B
w5351
89539 >= 25*xabs
25*xabs = 89539
A
w5352
89543 >= 25*xabs
25*xabs = 89543
B
w5353
89551 >= 25*xabs
25*xabs = 89551
A
w5354
17911 >= 5*xabs
5*xabs = 17911
B
w5355
89563 >= 25*xabs
25*xabs = 89563
A
w5356
89568 >= 25*xabs
25*xabs = 89568
B
w5357
89576 >= 25*xabs
25*xabs = 89576
A
w5358
17916 >= 5*xabs
5*xabs = 17916
B

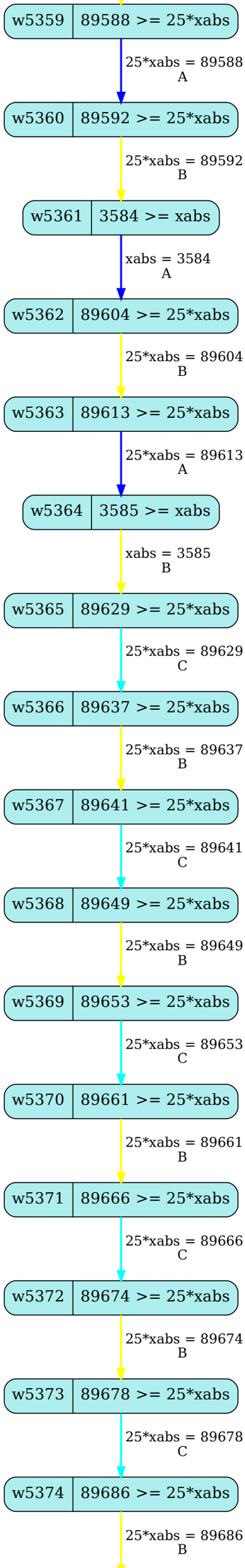
w5359
89588 >= 25*xabs
25*xabs = 89588
A
w5360
89592 >= 25*xabs
25*xabs = 89592
B
w5361
3584 >= xabs
xabs = 3584
A
w5362
89604 >= 25*xabs
25*xabs = 89604
B
w5363
89613 >= 25*xabs
25*xabs = 89613
A
w5364
3585 >= xabs
xabs = 3585
B
w5365
89629 >= 25*xabs
25*xabs = 89629
C
w5366
89637 >= 25*xabs
25*xabs = 89637
B
w5367
89641 >= 25*xabs
25*xabs = 89641
C
w5368
89649 >= 25*xabs
25*xabs = 89649
B
w5369
89653 >= 25*xabs
25*xabs = 89653
C
w5370
89661 >= 25*xabs
25*xabs = 89661
B
w5371
89666 >= 25*xabs
25*xabs = 89666
C
w5372
89674 >= 25*xabs
25*xabs = 89674
B
w5373
89678 >= 25*xabs
25*xabs = 89678
C
w5374
89686 >= 25*xabs
25*xabs = 89686
B

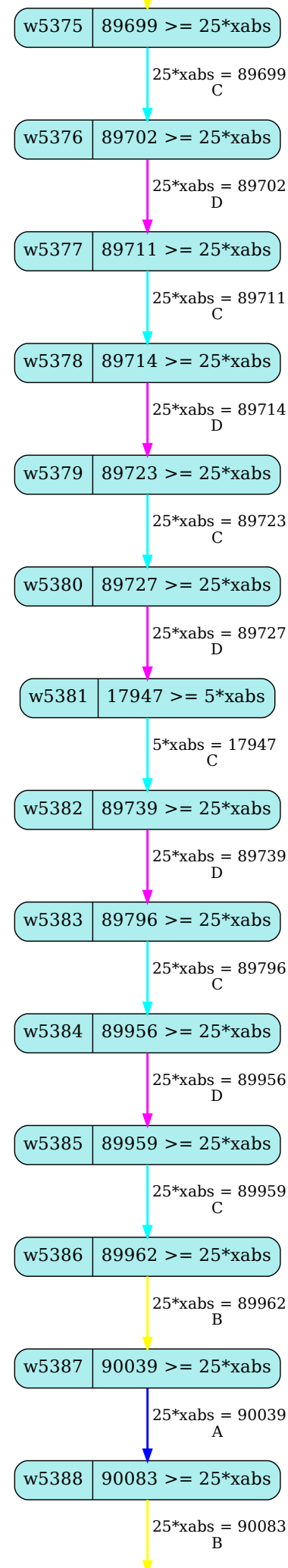
w5375
89699 >= 25*xabs
25*xabs = 89699
C
w5376
89702 >= 25*xabs
25*xabs = 89702
D
w5377
89711 >= 25*xabs
25*xabs = 89711
C
w5378
89714 >= 25*xabs
25*xabs = 89714
D
w5379
89723 >= 25*xabs
25*xabs = 89723
C
w5380
89727 >= 25*xabs
25*xabs = 89727
D
w5381
17947 >= 5*xabs
5*xabs = 17947
C
w5382
89739 >= 25*xabs
25*xabs = 89739
D
w5383
89796 >= 25*xabs
25*xabs = 89796
C
w5384
89956 >= 25*xabs
25*xabs = 89956
D
w5385
89959 >= 25*xabs
25*xabs = 89959
C
w5386
89962 >= 25*xabs
25*xabs = 89962
B
w5387
90039 >= 25*xabs
25*xabs = 90039
A
w5388
90083 >= 25*xabs
25*xabs = 90083
B

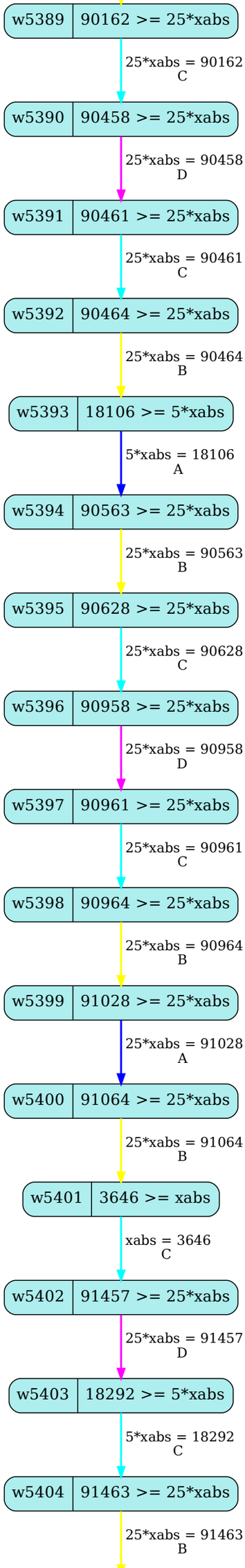
w5389
90162 >= 25*xabs
25*xabs = 90162
C
w5390
90458 >= 25*xabs
25*xabs = 90458
D
w5391
90461 >= 25*xabs
25*xabs = 90461
C
w5392
90464 >= 25*xabs
25*xabs = 90464
B
w5393
18106 >= 5*xabs
5*xabs = 18106
A
w5394
90563 >= 25*xabs
25*xabs = 90563
B
w5395
90628 >= 25*xabs
25*xabs = 90628
C
w5396
90958 >= 25*xabs
25*xabs = 90958
D
w5397
90961 >= 25*xabs
25*xabs = 90961
C
w5398
90964 >= 25*xabs
25*xabs = 90964
B
w5399
91028 >= 25*xabs
25*xabs = 91028
A
w5400
91064 >= 25*xabs
25*xabs = 91064
B
w5401
3646 >= xabs
xabs = 3646
C
w5402
91457 >= 25*xabs
25*xabs = 91457
D
w5403
18292 >= 5*xabs
5*xabs = 18292
C
w5404
91463 >= 25*xabs
25*xabs = 91463
B

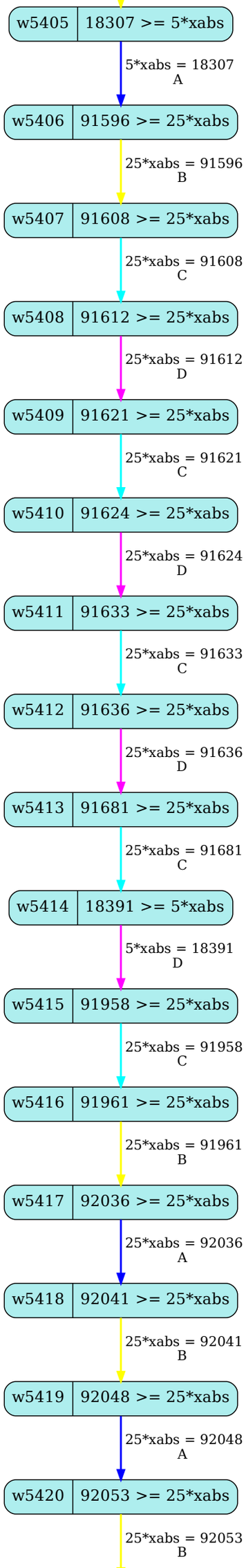
w5405
18307 >= 5*xabs
5*xabs = 18307
A
w5406
91596 >= 25*xabs
25*xabs = 91596
B
w5407
91608 >= 25*xabs
25*xabs = 91608
C
w5408
91612 >= 25*xabs
25*xabs = 91612
D
w5409
91621 >= 25*xabs
25*xabs = 91621
C
w5410
91624 >= 25*xabs
25*xabs = 91624
D
w5411
91633 >= 25*xabs
25*xabs = 91633
C
w5412
91636 >= 25*xabs
25*xabs = 91636
D
w5413
91681 >= 25*xabs
25*xabs = 91681
C
w5414
18391 >= 5*xabs
5*xabs = 18391
D
w5415
91958 >= 25*xabs
25*xabs = 91958
C
w5416
91961 >= 25*xabs
25*xabs = 91961
B
w5417
92036 >= 25*xabs
25*xabs = 92036
A
w5418
92041 >= 25*xabs
25*xabs = 92041
B
w5419
92048 >= 25*xabs
25*xabs = 92048
A
w5420
92053 >= 25*xabs
25*xabs = 92053
B

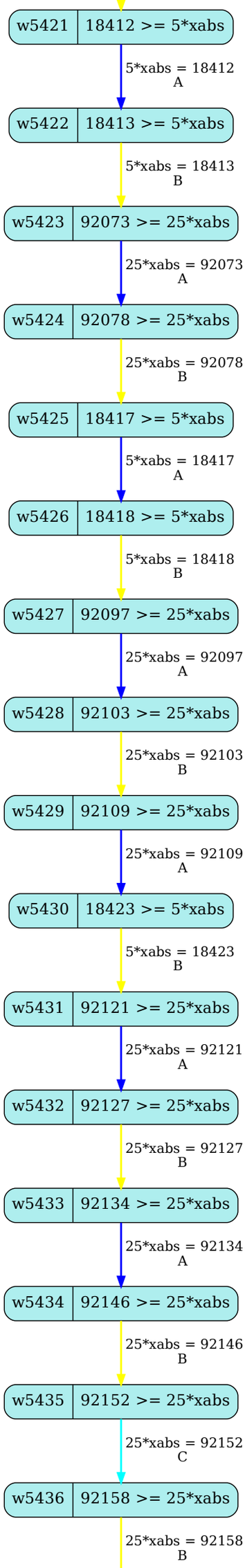
w5421
18412 >= 5*xabs
5*xabs = 18412
A
w5422
18413 >= 5*xabs
5*xabs = 18413
B
w5423
92073 >= 25*xabs
25*xabs = 92073
A
w5424
92078 >= 25*xabs
25*xabs = 92078
B
w5425
18417 >= 5*xabs
5*xabs = 18417
A
w5426
18418 >= 5*xabs
5*xabs = 18418
B
w5427
92097 >= 25*xabs
25*xabs = 92097
A
w5428
92103 >= 25*xabs
25*xabs = 92103
B
w5429
92109 >= 25*xabs
25*xabs = 92109
A
w5430
18423 >= 5*xabs
5*xabs = 18423
B
w5431
92121 >= 25*xabs
25*xabs = 92121
A
w5432
92127 >= 25*xabs
25*xabs = 92127
B
w5433
92134 >= 25*xabs
25*xabs = 92134
A
w5434
92146 >= 25*xabs
25*xabs = 92146
B
w5435
92152 >= 25*xabs
25*xabs = 92152
C
w5436
92158 >= 25*xabs
25*xabs = 92158
B

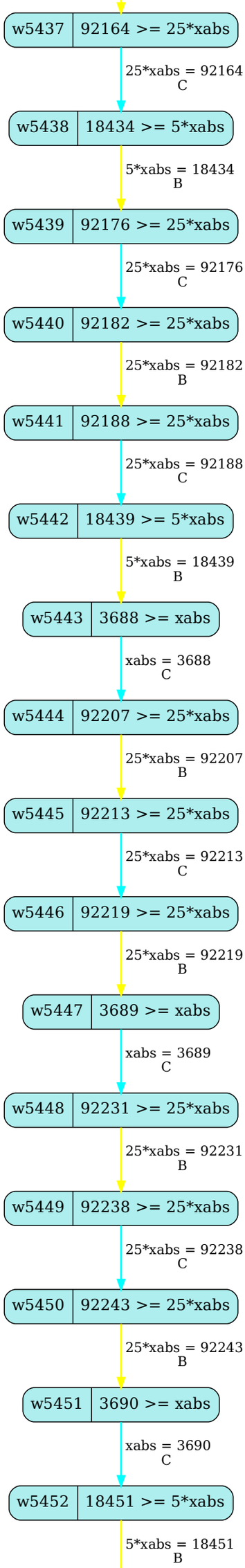
w5437
92164 >= 25*xabs
25*xabs = 92164
C
w5438
18434 >= 5*xabs
5*xabs = 18434
B
w5439
92176 >= 25*xabs
25*xabs = 92176
C
w5440
92182 >= 25*xabs
25*xabs = 92182
B
w5441
92188 >= 25*xabs
25*xabs = 92188
C
w5442
18439 >= 5*xabs
5*xabs = 18439
B
w5443
3688 >= xabs
xabs = 3688
C
w5444
92207 >= 25*xabs
25*xabs = 92207
B
w5445
92213 >= 25*xabs
25*xabs = 92213
C
w5446
92219 >= 25*xabs
25*xabs = 92219
B
w5447
3689 >= xabs
xabs = 3689
C
w5448
92231 >= 25*xabs
25*xabs = 92231
B
w5449
92238 >= 25*xabs
25*xabs = 92238
C
w5450
92243 >= 25*xabs
25*xabs = 92243
B
w5451
3690 >= xabs
xabs = 3690
C
w5452
18451 >= 5*xabs
5*xabs = 18451
B

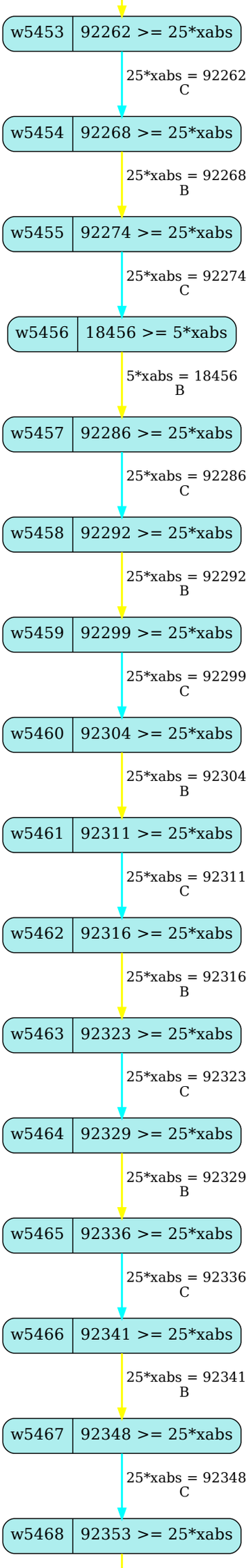
w5453
92262 >= 25*xabs
25*xabs = 92262
C
w5454
92268 >= 25*xabs
25*xabs = 92268
B
w5455
92274 >= 25*xabs
25*xabs = 92274
C
w5456
18456 >= 5*xabs
5*xabs = 18456
B
w5457
92286 >= 25*xabs
25*xabs = 92286
C
w5458
92292 >= 25*xabs
25*xabs = 92292
B
w5459
92299 >= 25*xabs
25*xabs = 92299
C
w5460
92304 >= 25*xabs
25*xabs = 92304
B
w5461
92311 >= 25*xabs
25*xabs = 92311
C
w5462
92316 >= 25*xabs
25*xabs = 92316
B
w5463
92323 >= 25*xabs
25*xabs = 92323
C
w5464
92329 >= 25*xabs
25*xabs = 92329
B
w5465
92336 >= 25*xabs
25*xabs = 92336
C
w5466
92341 >= 25*xabs
25*xabs = 92341
B
w5467
92348 >= 25*xabs
25*xabs = 92348
C
w5468
92353 >= 25*xabs

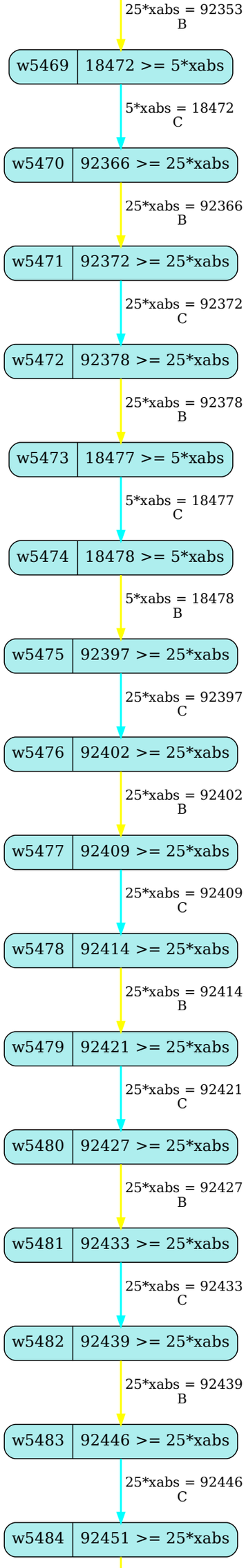
25*xabs = 92353
B
w5469
18472 >= 5*xabs
5*xabs = 18472
C
w5470
92366 >= 25*xabs
25*xabs = 92366
B
w5471
92372 >= 25*xabs
25*xabs = 92372
C
w5472
92378 >= 25*xabs
25*xabs = 92378
B
w5473
18477 >= 5*xabs
5*xabs = 18477
C
w5474
18478 >= 5*xabs
5*xabs = 18478
B
w5475
92397 >= 25*xabs
25*xabs = 92397
C
w5476
92402 >= 25*xabs
25*xabs = 92402
B
w5477
92409 >= 25*xabs
25*xabs = 92409
C
w5478
92414 >= 25*xabs
25*xabs = 92414
B
w5479
92421 >= 25*xabs
25*xabs = 92421
C
w5480
92427 >= 25*xabs
25*xabs = 92427
B
w5481
92433 >= 25*xabs
25*xabs = 92433
C
w5482
92439 >= 25*xabs
25*xabs = 92439
B
w5483
92446 >= 25*xabs
25*xabs = 92446
C
w5484
92451 >= 25*xabs

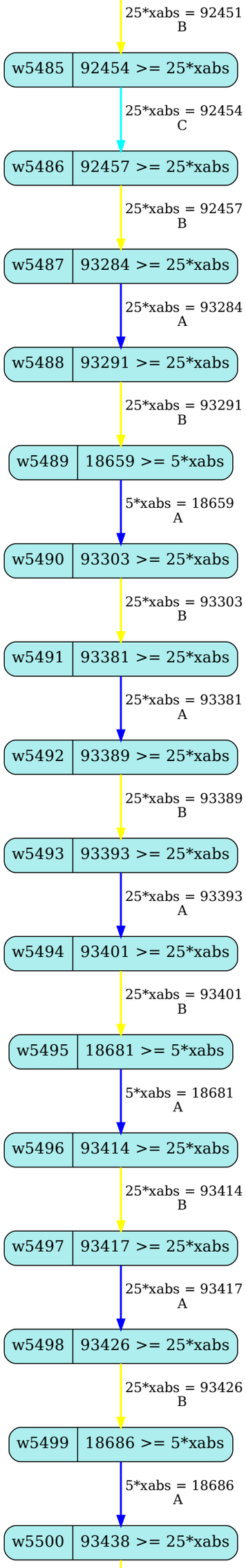
25*xabs = 92451
B
w5485
92454 >= 25*xabs
25*xabs = 92454
C
w5486
92457 >= 25*xabs
25*xabs = 92457
B
w5487
93284 >= 25*xabs
25*xabs = 93284
A
w5488
93291 >= 25*xabs
25*xabs = 93291
B
w5489
18659 >= 5*xabs
5*xabs = 18659
A
w5490
93303 >= 25*xabs
25*xabs = 93303
B
w5491
93381 >= 25*xabs
25*xabs = 93381
A
w5492
93389 >= 25*xabs
25*xabs = 93389
B
w5493
93393 >= 25*xabs
25*xabs = 93393
A
w5494
93401 >= 25*xabs
25*xabs = 93401
B
w5495
18681 >= 5*xabs
5*xabs = 18681
A
w5496
93414 >= 25*xabs
25*xabs = 93414
B
w5497
93417 >= 25*xabs
25*xabs = 93417
A
w5498
93426 >= 25*xabs
25*xabs = 93426
B
w5499
18686 >= 5*xabs
5*xabs = 18686
A
w5500
93438 >= 25*xabs

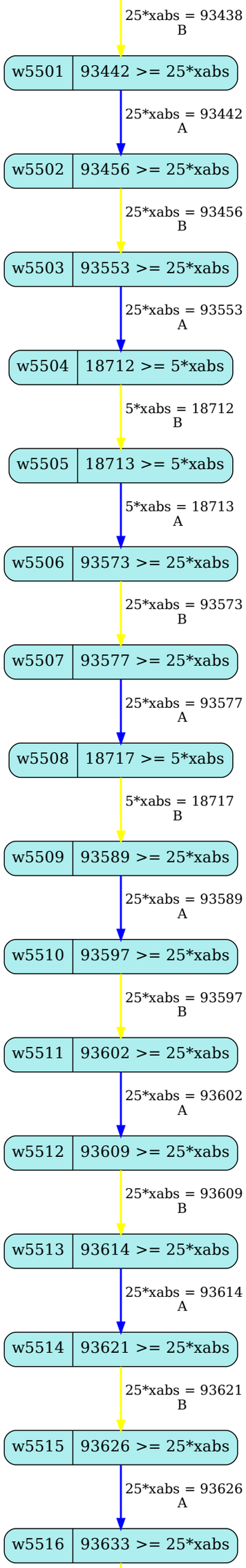
25*xabs = 93438
B
w5501
93442 >= 25*xabs
25*xabs = 93442
A
w5502
93456 >= 25*xabs
25*xabs = 93456
B
w5503
93553 >= 25*xabs
25*xabs = 93553
A
w5504
18712 >= 5*xabs
5*xabs = 18712
B
w5505
18713 >= 5*xabs
5*xabs = 18713
A
w5506
93573 >= 25*xabs
25*xabs = 93573
B
w5507
93577 >= 25*xabs
25*xabs = 93577
A
w5508
18717 >= 5*xabs
5*xabs = 18717
B
w5509
93589 >= 25*xabs
25*xabs = 93589
A
w5510
93597 >= 25*xabs
25*xabs = 93597
B
w5511
93602 >= 25*xabs
25*xabs = 93602
A
w5512
93609 >= 25*xabs
25*xabs = 93609
B
w5513
93614 >= 25*xabs
25*xabs = 93614
A
w5514
93621 >= 25*xabs
25*xabs = 93621
B
w5515
93626 >= 25*xabs
25*xabs = 93626
A
w5516
93633 >= 25*xabs

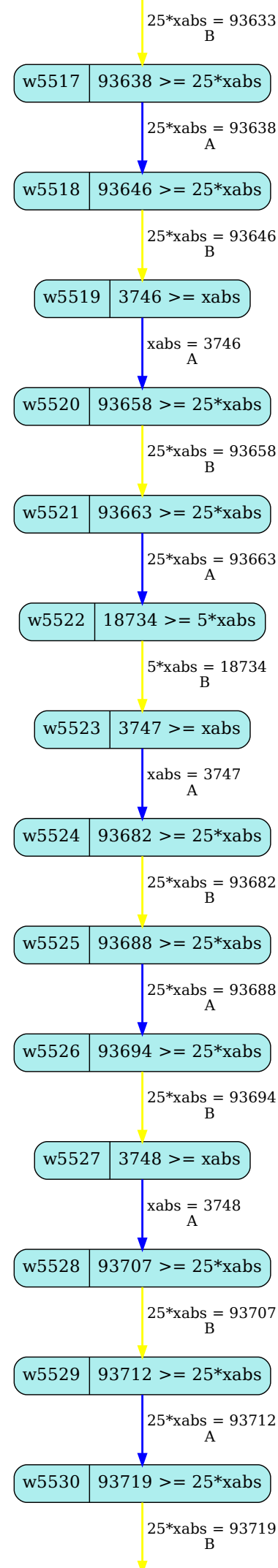
25*xabs = 93633
B
w5517
93638 >= 25*xabs
25*xabs = 93638
A
w5518
93646 >= 25*xabs
25*xabs = 93646
B
w5519
3746 >= xabs
xabs = 3746
A
w5520
93658 >= 25*xabs
25*xabs = 93658
B
w5521
93663 >= 25*xabs
25*xabs = 93663
A
w5522
18734 >= 5*xabs
5*xabs = 18734
B
w5523
3747 >= xabs
xabs = 3747
A
w5524
93682 >= 25*xabs
25*xabs = 93682
B
w5525
93688 >= 25*xabs
25*xabs = 93688
A
w5526
93694 >= 25*xabs
25*xabs = 93694
B
w5527
3748 >= xabs
xabs = 3748
A
w5528
93707 >= 25*xabs
25*xabs = 93707
B
w5529
93712 >= 25*xabs
25*xabs = 93712
A
w5530
93719 >= 25*xabs
25*xabs = 93719
B

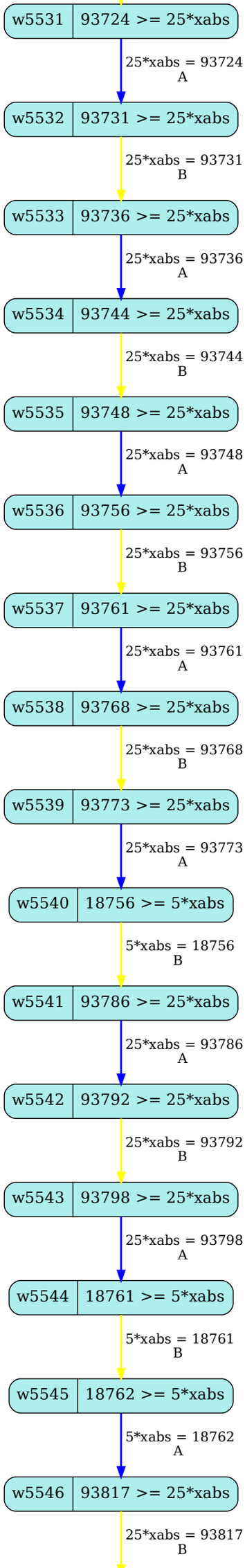
w5531
93724 >= 25*xabs
25*xabs = 93724
A
w5532
93731 >= 25*xabs
25*xabs = 93731
B
w5533
93736 >= 25*xabs
25*xabs = 93736
A
w5534
93744 >= 25*xabs
25*xabs = 93744
B
w5535
93748 >= 25*xabs
25*xabs = 93748
A
w5536
93756 >= 25*xabs
25*xabs = 93756
B
w5537
93761 >= 25*xabs
25*xabs = 93761
A
w5538
93768 >= 25*xabs
25*xabs = 93768
B
w5539
93773 >= 25*xabs
25*xabs = 93773
A
w5540
18756 >= 5*xabs
5*xabs = 18756
B
w5541
93786 >= 25*xabs
25*xabs = 93786
A
w5542
93792 >= 25*xabs
25*xabs = 93792
B
w5543
93798 >= 25*xabs
25*xabs = 93798
A
w5544
18761 >= 5*xabs
5*xabs = 18761
B
w5545
18762 >= 5*xabs
5*xabs = 18762
A
w5546
93817 >= 25*xabs
25*xabs = 93817
B

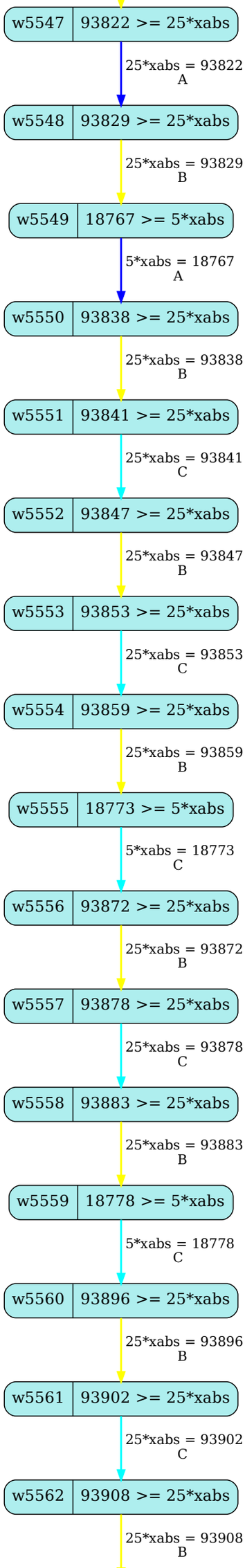
w5547
93822 >= 25*xabs
25*xabs = 93822
A
w5548
93829 >= 25*xabs
25*xabs = 93829
B
w5549
18767 >= 5*xabs
5*xabs = 18767
A
w5550
93838 >= 25*xabs
25*xabs = 93838
B
w5551
93841 >= 25*xabs
25*xabs = 93841
C
w5552
93847 >= 25*xabs
25*xabs = 93847
B
w5553
93853 >= 25*xabs
25*xabs = 93853
C
w5554
93859 >= 25*xabs
25*xabs = 93859
B
w5555
18773 >= 5*xabs
5*xabs = 18773
C
w5556
93872 >= 25*xabs
25*xabs = 93872
B
w5557
93878 >= 25*xabs
25*xabs = 93878
C
w5558
93883 >= 25*xabs
25*xabs = 93883
B
w5559
18778 >= 5*xabs
5*xabs = 18778
C
w5560
93896 >= 25*xabs
25*xabs = 93896
B
w5561
93902 >= 25*xabs
25*xabs = 93902
C
w5562
93908 >= 25*xabs
25*xabs = 93908
B

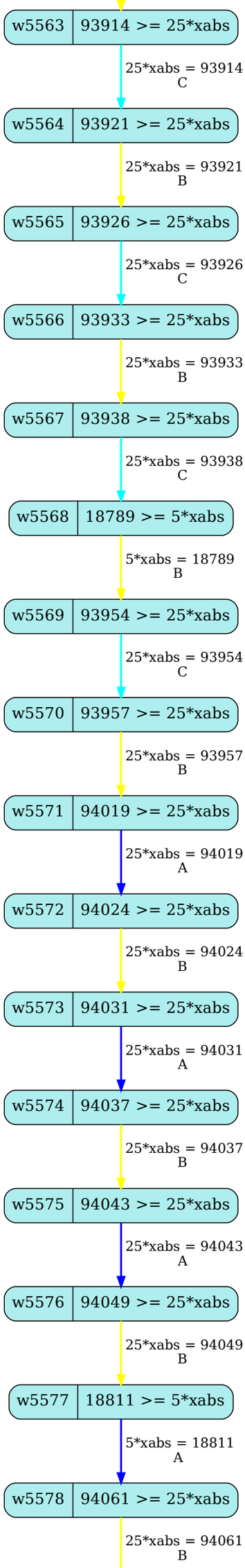
w5563
93914 >= 25*xabs
25*xabs = 93914
C
w5564
93921 >= 25*xabs
25*xabs = 93921
B
w5565
93926 >= 25*xabs
25*xabs = 93926
C
w5566
93933 >= 25*xabs
25*xabs = 93933
B
w5567
93938 >= 25*xabs
25*xabs = 93938
C
w5568
18789 >= 5*xabs
5*xabs = 18789
B
w5569
93954 >= 25*xabs
25*xabs = 93954
C
w5570
93957 >= 25*xabs
25*xabs = 93957
B
w5571
94019 >= 25*xabs
25*xabs = 94019
A
w5572
94024 >= 25*xabs
25*xabs = 94024
B
w5573
94031 >= 25*xabs
25*xabs = 94031
A
w5574
94037 >= 25*xabs
25*xabs = 94037
B
w5575
94043 >= 25*xabs
25*xabs = 94043
A
w5576
94049 >= 25*xabs
25*xabs = 94049
B
w5577
18811 >= 5*xabs
5*xabs = 18811
A
w5578
94061 >= 25*xabs
25*xabs = 94061
B

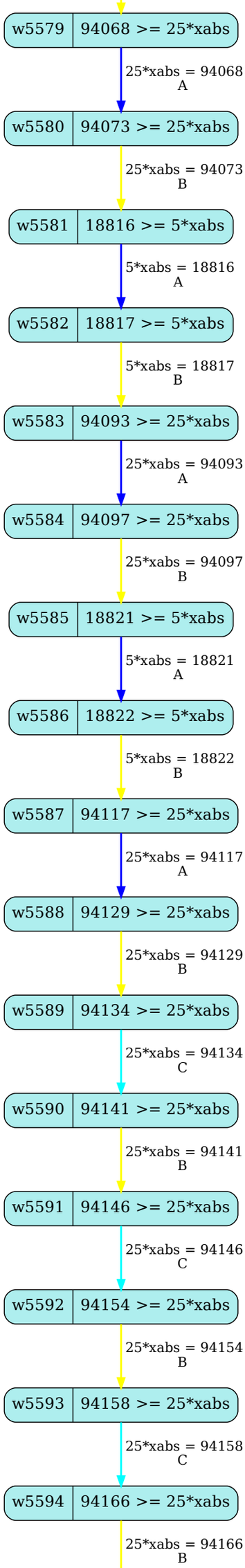
w5579
94068 >= 25*xabs
25*xabs = 94068
A
w5580
94073 >= 25*xabs
25*xabs = 94073
B
w5581
18816 >= 5*xabs
5*xabs = 18816
A
w5582
18817 >= 5*xabs
5*xabs = 18817
B
w5583
94093 >= 25*xabs
25*xabs = 94093
A
w5584
94097 >= 25*xabs
25*xabs = 94097
B
w5585
18821 >= 5*xabs
5*xabs = 18821
A
w5586
18822 >= 5*xabs
5*xabs = 18822
B
w5587
94117 >= 25*xabs
25*xabs = 94117
A
w5588
94129 >= 25*xabs
25*xabs = 94129
B
w5589
94134 >= 25*xabs
25*xabs = 94134
C
w5590
94141 >= 25*xabs
25*xabs = 94141
B
w5591
94146 >= 25*xabs
25*xabs = 94146
C
w5592
94154 >= 25*xabs
25*xabs = 94154
B
w5593
94158 >= 25*xabs
25*xabs = 94158
C
w5594
94166 >= 25*xabs
25*xabs = 94166
B

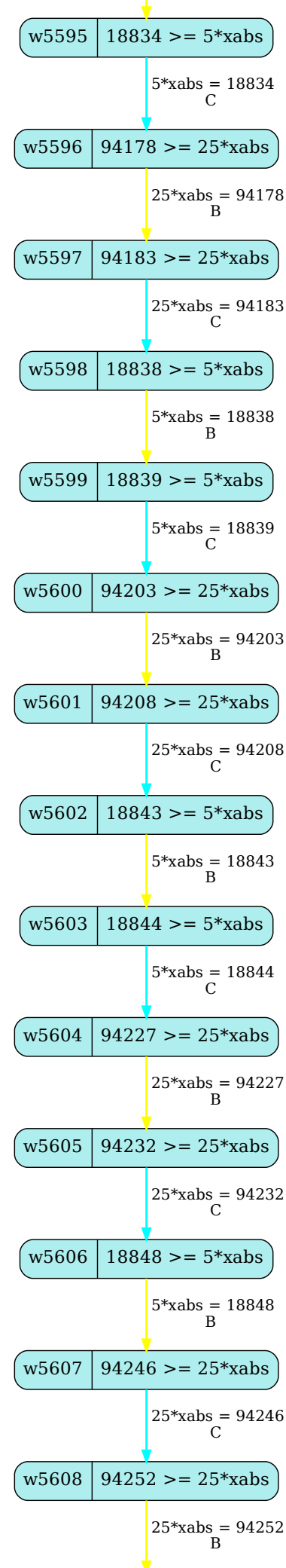
w5595
18834 >= 5*xabs
5*xabs = 18834
C
w5596
94178 >= 25*xabs
25*xabs = 94178
B
w5597
94183 >= 25*xabs
25*xabs = 94183
C
w5598
18838 >= 5*xabs
5*xabs = 18838
B
w5599
18839 >= 5*xabs
5*xabs = 18839
C
w5600
94203 >= 25*xabs
25*xabs = 94203
B
w5601
94208 >= 25*xabs
25*xabs = 94208
C
w5602
18843 >= 5*xabs
5*xabs = 18843
B
w5603
18844 >= 5*xabs
5*xabs = 18844
C
w5604
94227 >= 25*xabs
25*xabs = 94227
B
w5605
94232 >= 25*xabs
25*xabs = 94232
C
w5606
18848 >= 5*xabs
5*xabs = 18848
B
w5607
94246 >= 25*xabs
25*xabs = 94246
C
w5608
94252 >= 25*xabs
25*xabs = 94252
B

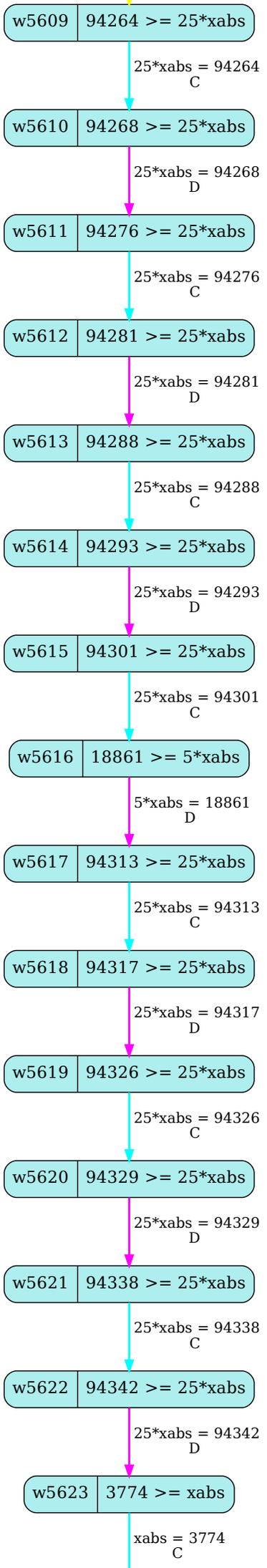
w5609
94264 >= 25*xabs
25*xabs = 94264
C
w5610
94268 >= 25*xabs
25*xabs = 94268
D
w5611
94276 >= 25*xabs
25*xabs = 94276
C
w5612
94281 >= 25*xabs
25*xabs = 94281
D
w5613
94288 >= 25*xabs
25*xabs = 94288
C
w5614
94293 >= 25*xabs
25*xabs = 94293
D
w5615
94301 >= 25*xabs
25*xabs = 94301
C
w5616
18861 >= 5*xabs
5*xabs = 18861
D
w5617
94313 >= 25*xabs
25*xabs = 94313
C
w5618
94317 >= 25*xabs
25*xabs = 94317
D
w5619
94326 >= 25*xabs
25*xabs = 94326
C
w5620
94329 >= 25*xabs
25*xabs = 94329
D
w5621
94338 >= 25*xabs
25*xabs = 94338
C
w5622
94342 >= 25*xabs
25*xabs = 94342
D
w5623
3774 >= xabs
xabs = 3774
C

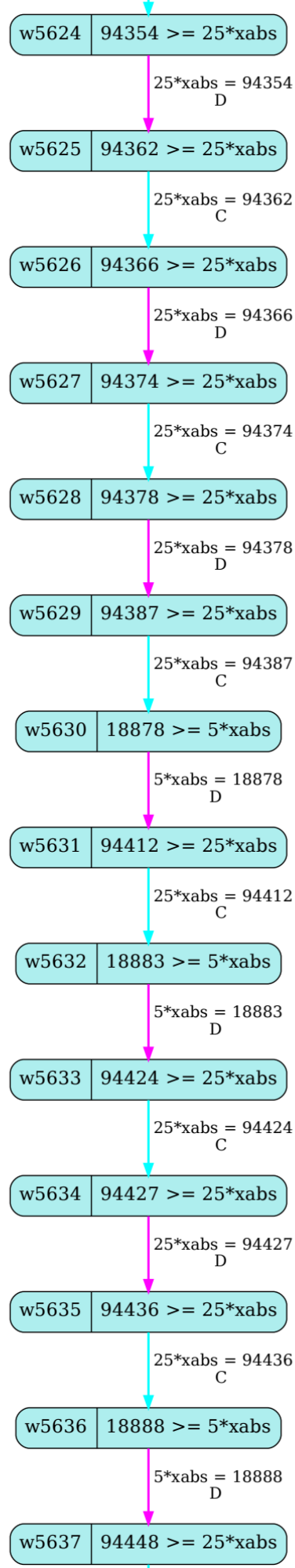
w5624
94354 >= 25*xabs
25*xabs = 94354
D
w5625
94362 >= 25*xabs
25*xabs = 94362
C
w5626
94366 >= 25*xabs
25*xabs = 94366
D
w5627
94374 >= 25*xabs
25*xabs = 94374
C
w5628
94378 >= 25*xabs
25*xabs = 94378
D
w5629
94387 >= 25*xabs
25*xabs = 94387
C
w5630
18878 >= 5*xabs
5*xabs = 18878
D
w5631
94412 >= 25*xabs
25*xabs = 94412
C
w5632
18883 >= 5*xabs
5*xabs = 18883
D
w5633
94424 >= 25*xabs
25*xabs = 94424
C
w5634
94427 >= 25*xabs
25*xabs = 94427
D
w5635
94436 >= 25*xabs
25*xabs = 94436
C
w5636
18888 >= 5*xabs
5*xabs = 18888
D
w5637
94448 >= 25*xabs

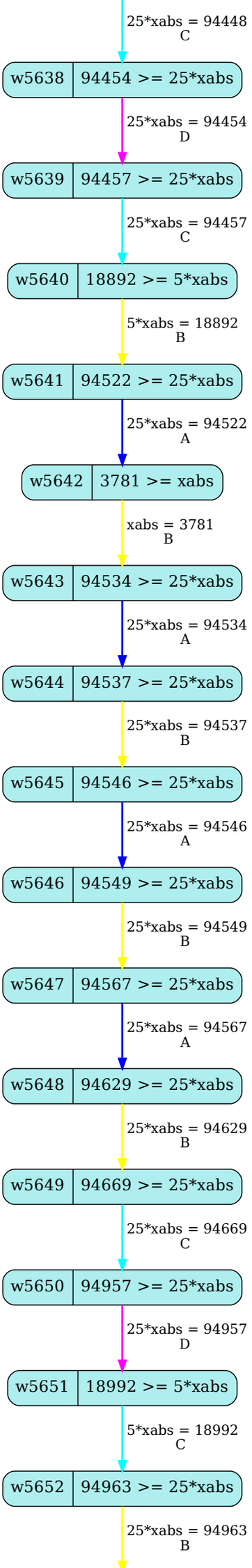
25*xabs = 94448
C
w5638
94454 >= 25*xabs
25*xabs = 94454
D
w5639
94457 >= 25*xabs
25*xabs = 94457
C
w5640
18892 >= 5*xabs
5*xabs = 18892
B
w5641
94522 >= 25*xabs
25*xabs = 94522
A
w5642
3781 >= xabs
xabs = 3781
B
w5643
94534 >= 25*xabs
25*xabs = 94534
A
w5644
94537 >= 25*xabs
25*xabs = 94537
B
w5645
94546 >= 25*xabs
25*xabs = 94546
A
w5646
94549 >= 25*xabs
25*xabs = 94549
B
w5647
94567 >= 25*xabs
25*xabs = 94567
A
w5648
94629 >= 25*xabs
25*xabs = 94629
B
w5649
94669 >= 25*xabs
25*xabs = 94669
C
w5650
94957 >= 25*xabs
25*xabs = 94957
D
w5651
18992 >= 5*xabs
5*xabs = 18992
C
w5652
94963 >= 25*xabs
25*xabs = 94963
B

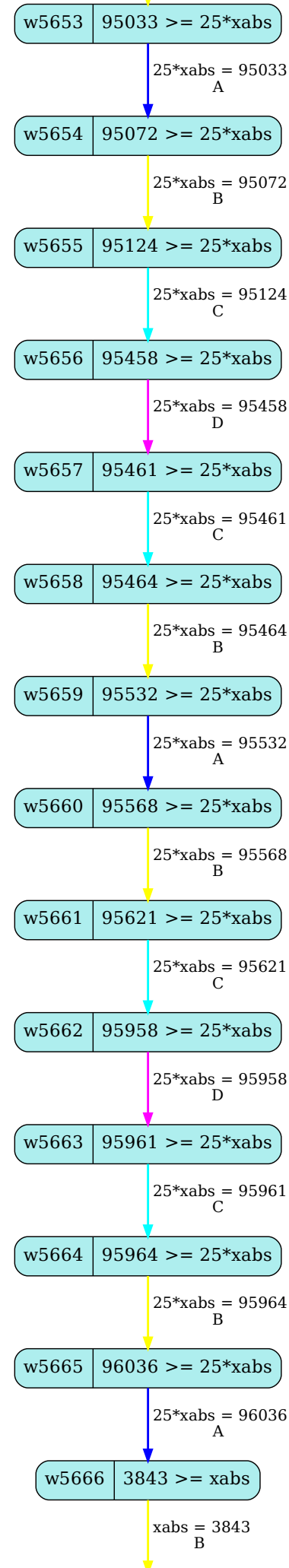
w5653
95033 >= 25*xabs
25*xabs = 95033
A
w5654
95072 >= 25*xabs
25*xabs = 95072
B
w5655
95124 >= 25*xabs
25*xabs = 95124
C
w5656
95458 >= 25*xabs
25*xabs = 95458
D
w5657
95461 >= 25*xabs
25*xabs = 95461
C
w5658
95464 >= 25*xabs
25*xabs = 95464
B
w5659
95532 >= 25*xabs
25*xabs = 95532
A
w5660
95568 >= 25*xabs
25*xabs = 95568
B
w5661
95621 >= 25*xabs
25*xabs = 95621
C
w5662
95958 >= 25*xabs
25*xabs = 95958
D
w5663
95961 >= 25*xabs
25*xabs = 95961
C
w5664
95964 >= 25*xabs
25*xabs = 95964
B
w5665
96036 >= 25*xabs
25*xabs = 96036
A
w5666
3843 >= xabs
xabs = 3843
B

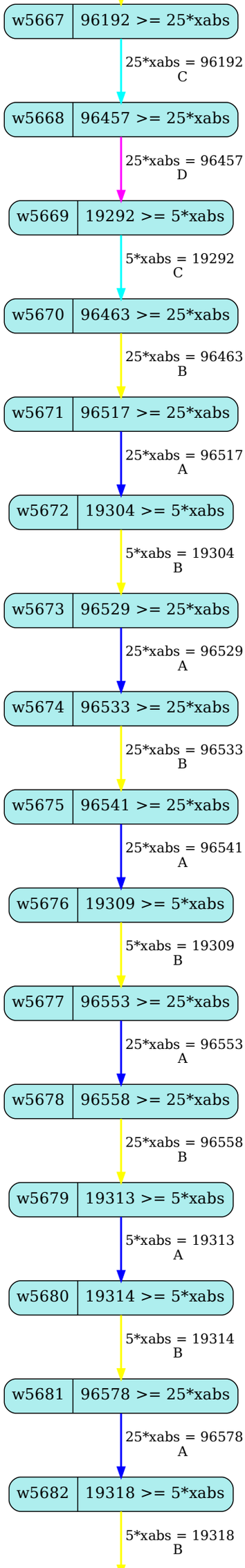
w5667
96192 >= 25*xabs
25*xabs = 96192
C
w5668
96457 >= 25*xabs
25*xabs = 96457
D
w5669
19292 >= 5*xabs
5*xabs = 19292
C
w5670
96463 >= 25*xabs
25*xabs = 96463
B
w5671
96517 >= 25*xabs
25*xabs = 96517
A
w5672
19304 >= 5*xabs
5*xabs = 19304
B
w5673
96529 >= 25*xabs
25*xabs = 96529
A
w5674
96533 >= 25*xabs
25*xabs = 96533
B
w5675
96541 >= 25*xabs
25*xabs = 96541
A
w5676
19309 >= 5*xabs
5*xabs = 19309
B
w5677
96553 >= 25*xabs
25*xabs = 96553
A
w5678
96558 >= 25*xabs
25*xabs = 96558
B
w5679
19313 >= 5*xabs
5*xabs = 19313
A
w5680
19314 >= 5*xabs
5*xabs = 19314
B
w5681
96578 >= 25*xabs
25*xabs = 96578
A
w5682
19318 >= 5*xabs
5*xabs = 19318
B

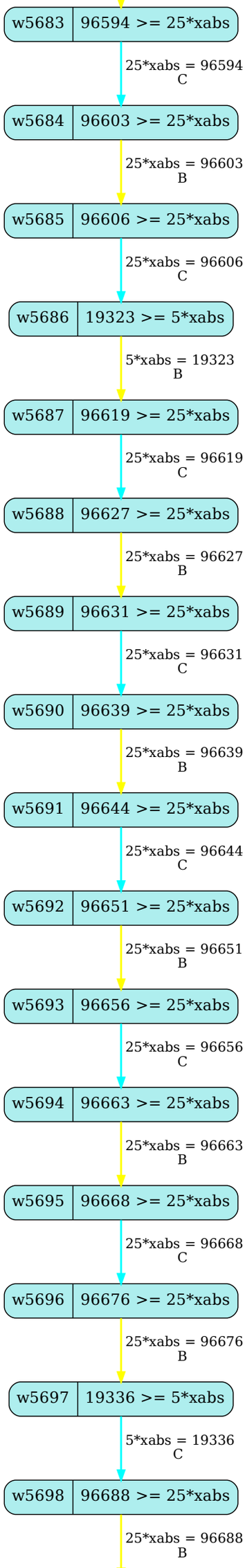
w5683
96594 >= 25*xabs
25*xabs = 96594
C
w5684
96603 >= 25*xabs
25*xabs = 96603
B
w5685
96606 >= 25*xabs
25*xabs = 96606
C
w5686
19323 >= 5*xabs
5*xabs = 19323
B
w5687
96619 >= 25*xabs
25*xabs = 96619
C
w5688
96627 >= 25*xabs
25*xabs = 96627
B
w5689
96631 >= 25*xabs
25*xabs = 96631
C
w5690
96639 >= 25*xabs
25*xabs = 96639
B
w5691
96644 >= 25*xabs
25*xabs = 96644
C
w5692
96651 >= 25*xabs
25*xabs = 96651
B
w5693
96656 >= 25*xabs
25*xabs = 96656
C
w5694
96663 >= 25*xabs
25*xabs = 96663
B
w5695
96668 >= 25*xabs
25*xabs = 96668
C
w5696
96676 >= 25*xabs
25*xabs = 96676
B
w5697
19336 >= 5*xabs
5*xabs = 19336
C
w5698
96688 >= 25*xabs
25*xabs = 96688
B

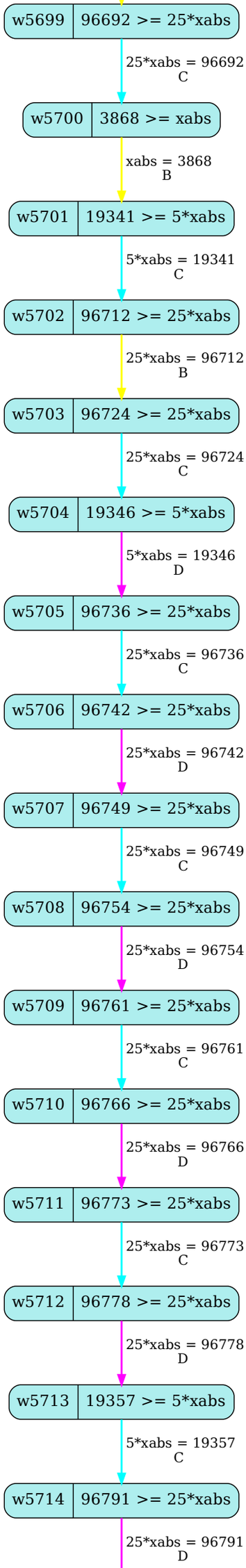
w5699
96692 >= 25*xabs
25*xabs = 96692
C
w5700
3868 >= xabs
xabs = 3868
B
w5701
19341 >= 5*xabs
5*xabs = 19341
C
w5702
96712 >= 25*xabs
25*xabs = 96712
B
w5703
96724 >= 25*xabs
25*xabs = 96724
C
w5704
19346 >= 5*xabs
5*xabs = 19346
D
w5705
96736 >= 25*xabs
25*xabs = 96736
C
w5706
96742 >= 25*xabs
25*xabs = 96742
D
w5707
96749 >= 25*xabs
25*xabs = 96749
C
w5708
96754 >= 25*xabs
25*xabs = 96754
D
w5709
96761 >= 25*xabs
25*xabs = 96761
C
w5710
96766 >= 25*xabs
25*xabs = 96766
D
w5711
96773 >= 25*xabs
25*xabs = 96773
C
w5712
96778 >= 25*xabs
25*xabs = 96778
D
w5713
19357 >= 5*xabs
5*xabs = 19357
C
w5714
96791 >= 25*xabs
25*xabs = 96791
D

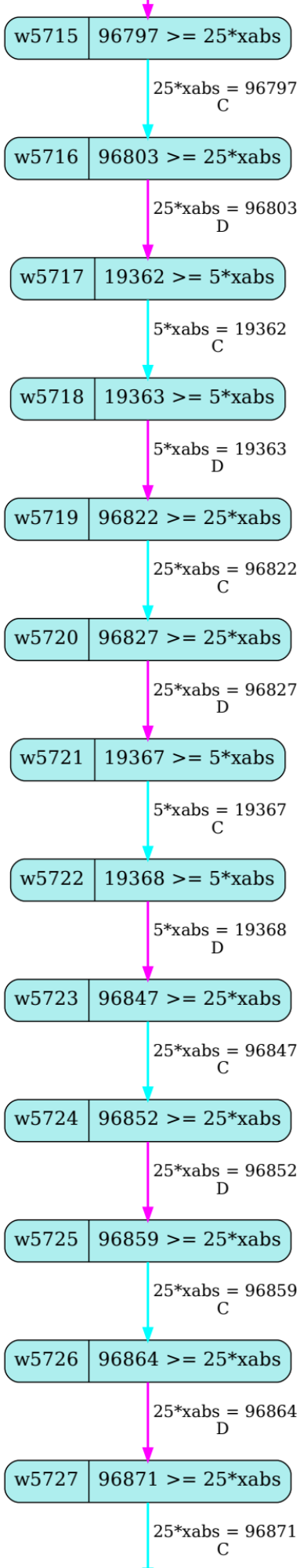
w5715
96797 >= 25*xabs
25*xabs = 96797
C
w5716
96803 >= 25*xabs
25*xabs = 96803
D
w5717
19362 >= 5*xabs
5*xabs = 19362
C
w5718
19363 >= 5*xabs
5*xabs = 19363
D
w5719
96822 >= 25*xabs
25*xabs = 96822
C
w5720
96827 >= 25*xabs
25*xabs = 96827
D
w5721
19367 >= 5*xabs
5*xabs = 19367
C
w5722
19368 >= 5*xabs
5*xabs = 19368
D
w5723
96847 >= 25*xabs
25*xabs = 96847
C
w5724
96852 >= 25*xabs
25*xabs = 96852
D
w5725
96859 >= 25*xabs
25*xabs = 96859
C
w5726
96864 >= 25*xabs
25*xabs = 96864
D
w5727
96871 >= 25*xabs
25*xabs = 96871
C

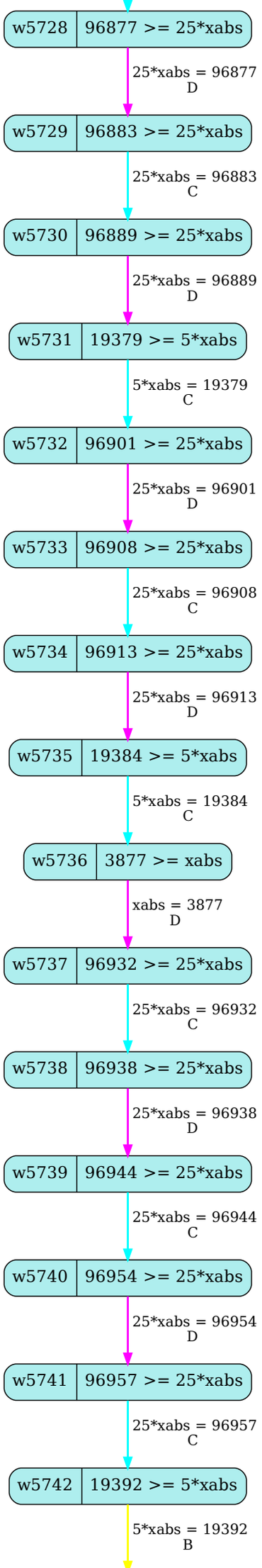
w5728
96877 >= 25*xabs
25*xabs = 96877
D
w5729
96883 >= 25*xabs
25*xabs = 96883
C
w5730
96889 >= 25*xabs
25*xabs = 96889
D
w5731
19379 >= 5*xabs
5*xabs = 19379
C
w5732
96901 >= 25*xabs
25*xabs = 96901
D
w5733
96908 >= 25*xabs
25*xabs = 96908
C
w5734
96913 >= 25*xabs
25*xabs = 96913
D
w5735
19384 >= 5*xabs
5*xabs = 19384
C
w5736
3877 >= xabs
xabs = 3877
D
w5737
96932 >= 25*xabs
25*xabs = 96932
C
w5738
96938 >= 25*xabs
25*xabs = 96938
D
w5739
96944 >= 25*xabs
25*xabs = 96944
C
w5740
96954 >= 25*xabs
25*xabs = 96954
D
w5741
96957 >= 25*xabs
25*xabs = 96957
C
w5742
19392 >= 5*xabs
5*xabs = 19392
B

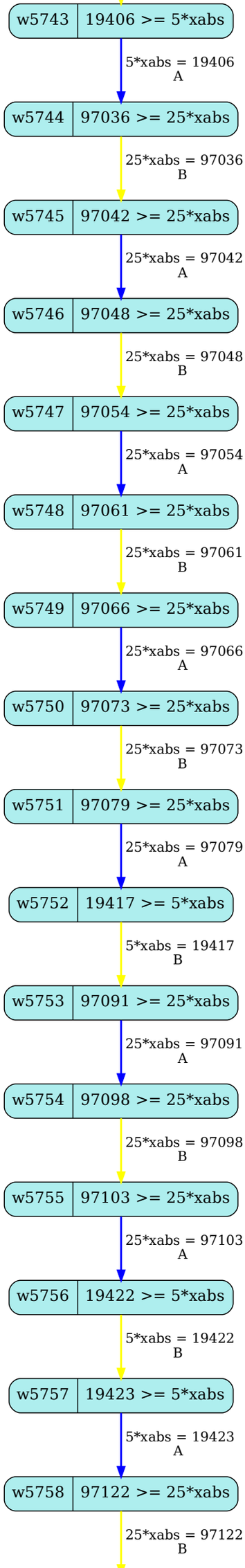
w5743
19406 >= 5*xabs
5*xabs = 19406
A
w5744
97036 >= 25*xabs
25*xabs = 97036
B
w5745
97042 >= 25*xabs
25*xabs = 97042
A
w5746
97048 >= 25*xabs
25*xabs = 97048
B
w5747
97054 >= 25*xabs
25*xabs = 97054
A
w5748
97061 >= 25*xabs
25*xabs = 97061
B
w5749
97066 >= 25*xabs
25*xabs = 97066
A
w5750
97073 >= 25*xabs
25*xabs = 97073
B
w5751
97079 >= 25*xabs
25*xabs = 97079
A
w5752
19417 >= 5*xabs
5*xabs = 19417
B
w5753
97091 >= 25*xabs
25*xabs = 97091
A
w5754
97098 >= 25*xabs
25*xabs = 97098
B
w5755
97103 >= 25*xabs
25*xabs = 97103
A
w5756
19422 >= 5*xabs
5*xabs = 19422
B
w5757
19423 >= 5*xabs
5*xabs = 19423
A
w5758
97122 >= 25*xabs
25*xabs = 97122
B

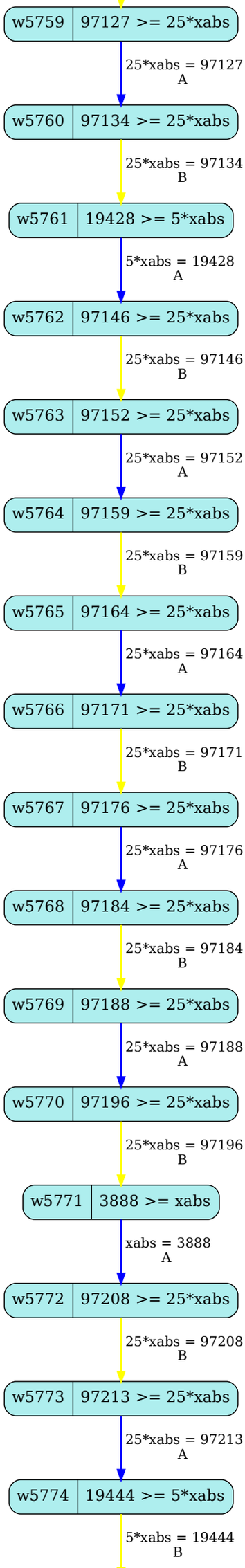
w5759
97127 >= 25*xabs
25*xabs = 97127
A
w5760
97134 >= 25*xabs
25*xabs = 97134
B
w5761
19428 >= 5*xabs
5*xabs = 19428
A
w5762
97146 >= 25*xabs
25*xabs = 97146
B
w5763
97152 >= 25*xabs
25*xabs = 97152
A
w5764
97159 >= 25*xabs
25*xabs = 97159
B
w5765
97164 >= 25*xabs
25*xabs = 97164
A
w5766
97171 >= 25*xabs
25*xabs = 97171
B
w5767
97176 >= 25*xabs
25*xabs = 97176
A
w5768
97184 >= 25*xabs
25*xabs = 97184
B
w5769
97188 >= 25*xabs
25*xabs = 97188
A
w5770
97196 >= 25*xabs
25*xabs = 97196
B
w5771
3888 >= xabs
xabs = 3888
A
w5772
97208 >= 25*xabs
25*xabs = 97208
B
w5773
97213 >= 25*xabs
25*xabs = 97213
A
w5774
19444 >= 5*xabs
5*xabs = 19444
B

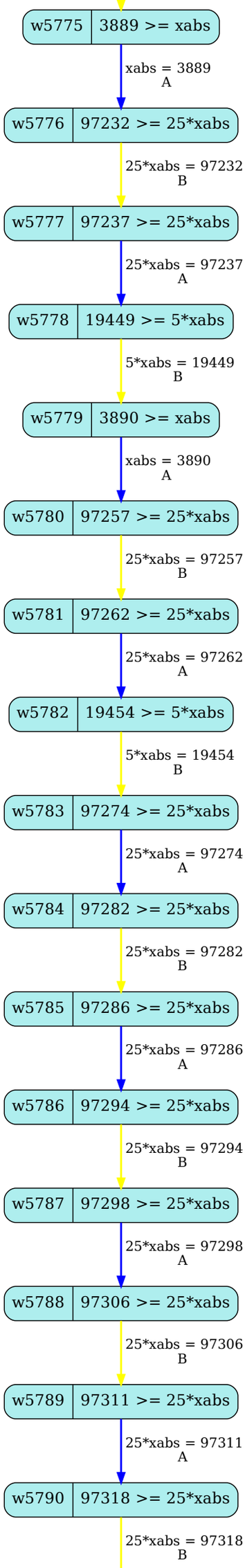
w5775
3889 >= xabs
xabs = 3889
A
w5776
97232 >= 25*xabs
25*xabs = 97232
B
w5777
97237 >= 25*xabs
25*xabs = 97237
A
w5778
19449 >= 5*xabs
5*xabs = 19449
B
w5779
3890 >= xabs
xabs = 3890
A
w5780
97257 >= 25*xabs
25*xabs = 97257
B
w5781
97262 >= 25*xabs
25*xabs = 97262
A
w5782
19454 >= 5*xabs
5*xabs = 19454
B
w5783
97274 >= 25*xabs
25*xabs = 97274
A
w5784
97282 >= 25*xabs
25*xabs = 97282
B
w5785
97286 >= 25*xabs
25*xabs = 97286
A
w5786
97294 >= 25*xabs
25*xabs = 97294
B
w5787
97298 >= 25*xabs
25*xabs = 97298
A
w5788
97306 >= 25*xabs
25*xabs = 97306
B
w5789
97311 >= 25*xabs
25*xabs = 97311
A
w5790
97318 >= 25*xabs
25*xabs = 97318
B

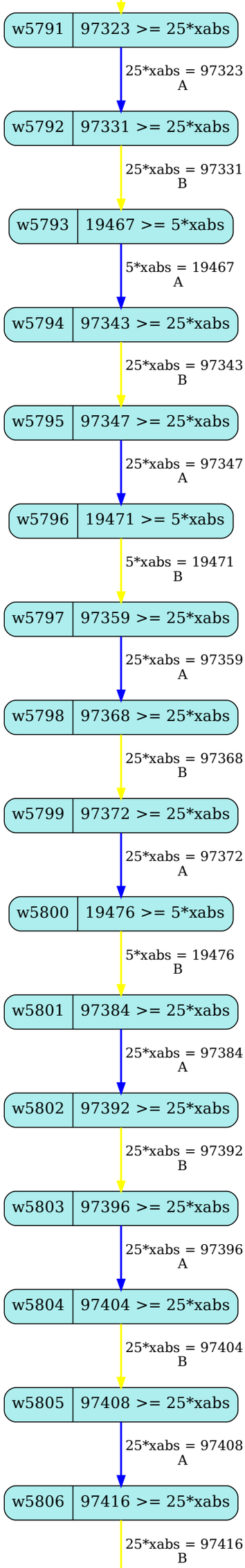
w5791
97323 >= 25*xabs
25*xabs = 97323
A
w5792
97331 >= 25*xabs
25*xabs = 97331
B
w5793
19467 >= 5*xabs
5*xabs = 19467
A
w5794
97343 >= 25*xabs
25*xabs = 97343
B
w5795
97347 >= 25*xabs
25*xabs = 97347
A
w5796
19471 >= 5*xabs
5*xabs = 19471
B
w5797
97359 >= 25*xabs
25*xabs = 97359
A
w5798
97368 >= 25*xabs
25*xabs = 97368
B
w5799
97372 >= 25*xabs
25*xabs = 97372
A
w5800
19476 >= 5*xabs
5*xabs = 19476
B
w5801
97384 >= 25*xabs
25*xabs = 97384
A
w5802
97392 >= 25*xabs
25*xabs = 97392
B
w5803
97396 >= 25*xabs
25*xabs = 97396
A
w5804
97404 >= 25*xabs
25*xabs = 97404
B
w5805
97408 >= 25*xabs
25*xabs = 97408
A
w5806
97416 >= 25*xabs
25*xabs = 97416
B

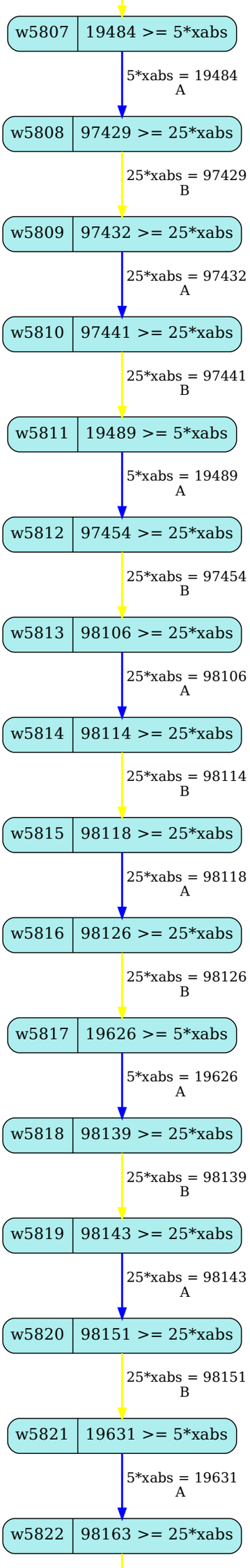
w5807
19484 >= 5*xabs
5*xabs = 19484
A
w5808
97429 >= 25*xabs
25*xabs = 97429
B
w5809
97432 >= 25*xabs
25*xabs = 97432
A
w5810
97441 >= 25*xabs
25*xabs = 97441
B
w5811
19489 >= 5*xabs
5*xabs = 19489
A
w5812
97454 >= 25*xabs
25*xabs = 97454
B
w5813
98106 >= 25*xabs
25*xabs = 98106
A
w5814
98114 >= 25*xabs
25*xabs = 98114
B
w5815
98118 >= 25*xabs
25*xabs = 98118
A
w5816
98126 >= 25*xabs
25*xabs = 98126
B
w5817
19626 >= 5*xabs
5*xabs = 19626
A
w5818
98139 >= 25*xabs
25*xabs = 98139
B
w5819
98143 >= 25*xabs
25*xabs = 98143
A
w5820
98151 >= 25*xabs
25*xabs = 98151
B
w5821
19631 >= 5*xabs
5*xabs = 19631
A
w5822
98163 >= 25*xabs

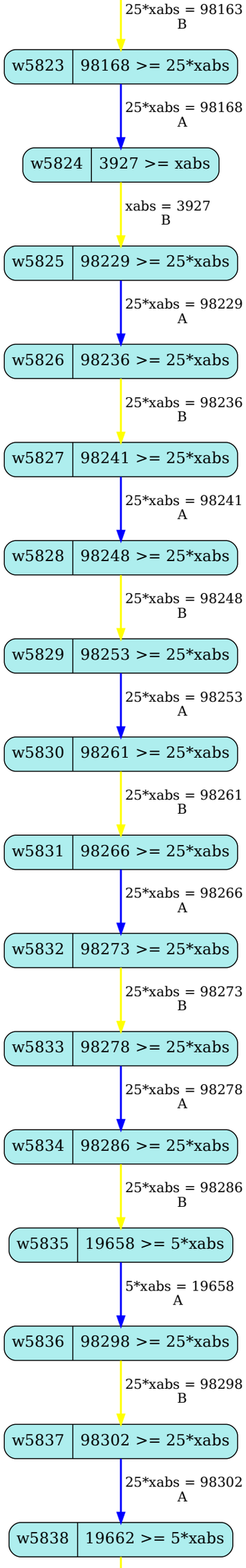
25*xabs = 98163
B
w5823
98168 >= 25*xabs
25*xabs = 98168
A
w5824
3927 >= xabs
xabs = 3927
B
w5825
98229 >= 25*xabs
25*xabs = 98229
A
w5826
98236 >= 25*xabs
25*xabs = 98236
B
w5827
98241 >= 25*xabs
25*xabs = 98241
A
w5828
98248 >= 25*xabs
25*xabs = 98248
B
w5829
98253 >= 25*xabs
25*xabs = 98253
A
w5830
98261 >= 25*xabs
25*xabs = 98261
B
w5831
98266 >= 25*xabs
25*xabs = 98266
A
w5832
98273 >= 25*xabs
25*xabs = 98273
B
w5833
98278 >= 25*xabs
25*xabs = 98278
A
w5834
98286 >= 25*xabs
25*xabs = 98286
B
w5835
19658 >= 5*xabs
5*xabs = 19658
A
w5836
98298 >= 25*xabs
25*xabs = 98298
B
w5837
98302 >= 25*xabs
25*xabs = 98302
A
w5838
19662 >= 5*xabs

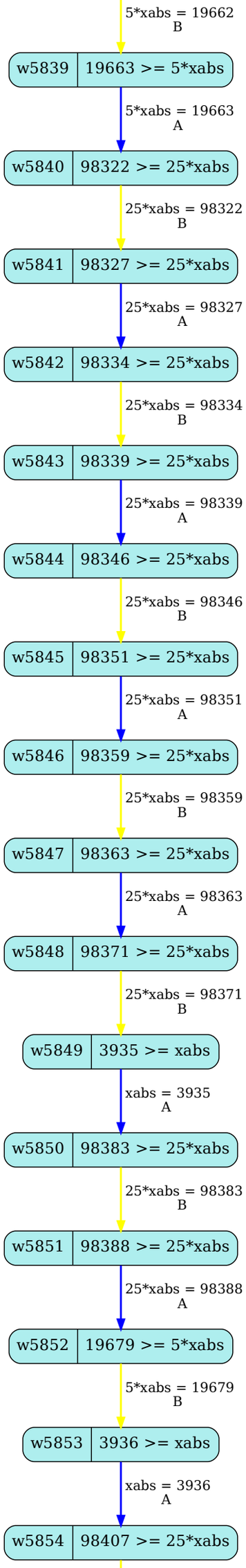
5*xabs = 19662
B
w5839
19663 >= 5*xabs
5*xabs = 19663
A
w5840
98322 >= 25*xabs
25*xabs = 98322
B
w5841
98327 >= 25*xabs
25*xabs = 98327
A
w5842
98334 >= 25*xabs
25*xabs = 98334
B
w5843
98339 >= 25*xabs
25*xabs = 98339
A
w5844
98346 >= 25*xabs
25*xabs = 98346
B
w5845
98351 >= 25*xabs
25*xabs = 98351
A
w5846
98359 >= 25*xabs
25*xabs = 98359
B
w5847
98363 >= 25*xabs
25*xabs = 98363
A
w5848
98371 >= 25*xabs
25*xabs = 98371
B
w5849
3935 >= xabs
xabs = 3935
A
w5850
98383 >= 25*xabs
25*xabs = 98383
B
w5851
98388 >= 25*xabs
25*xabs = 98388
A
w5852
19679 >= 5*xabs
5*xabs = 19679
B
w5853
3936 >= xabs
xabs = 3936
A
w5854
98407 >= 25*xabs

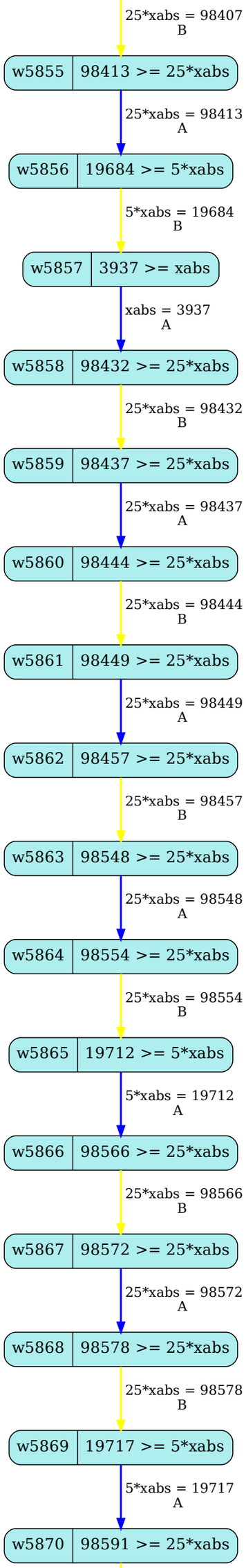
25*xabs = 98407
B
w5855
98413 >= 25*xabs
25*xabs = 98413
A
w5856
19684 >= 5*xabs
5*xabs = 19684
B
w5857
3937 >= xabs
xabs = 3937
A
w5858
98432 >= 25*xabs
25*xabs = 98432
B
w5859
98437 >= 25*xabs
25*xabs = 98437
A
w5860
98444 >= 25*xabs
25*xabs = 98444
B
w5861
98449 >= 25*xabs
25*xabs = 98449
A
w5862
98457 >= 25*xabs
25*xabs = 98457
B
w5863
98548 >= 25*xabs
25*xabs = 98548
A
w5864
98554 >= 25*xabs
25*xabs = 98554
B
w5865
19712 >= 5*xabs
5*xabs = 19712
A
w5866
98566 >= 25*xabs
25*xabs = 98566
B
w5867
98572 >= 25*xabs
25*xabs = 98572
A
w5868
98578 >= 25*xabs
25*xabs = 98578
B
w5869
19717 >= 5*xabs
5*xabs = 19717
A
w5870
98591 >= 25*xabs

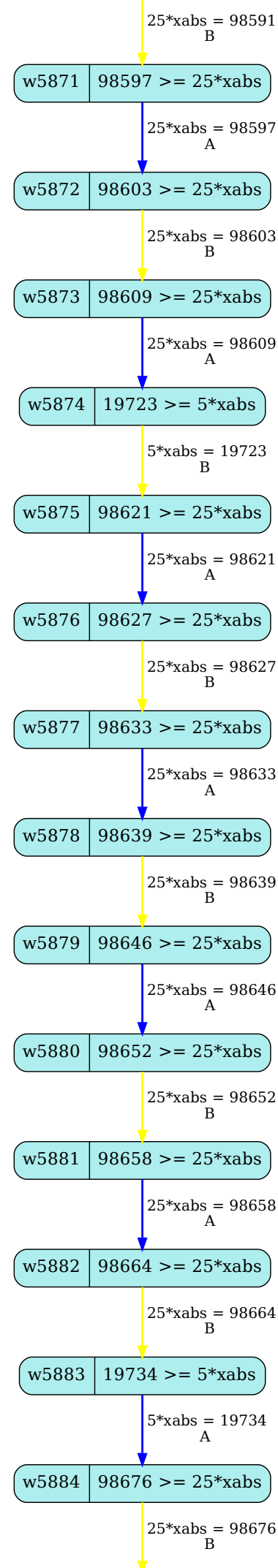
25*xabs = 98591
B
w5871
98597 >= 25*xabs
25*xabs = 98597
A
w5872
98603 >= 25*xabs
25*xabs = 98603
B
w5873
98609 >= 25*xabs
25*xabs = 98609
A
w5874
19723 >= 5*xabs
5*xabs = 19723
B
w5875
98621 >= 25*xabs
25*xabs = 98621
A
w5876
98627 >= 25*xabs
25*xabs = 98627
B
w5877
98633 >= 25*xabs
25*xabs = 98633
A
w5878
98639 >= 25*xabs
25*xabs = 98639
B
w5879
98646 >= 25*xabs
25*xabs = 98646
A
w5880
98652 >= 25*xabs
25*xabs = 98652
B
w5881
98658 >= 25*xabs
25*xabs = 98658
A
w5882
98664 >= 25*xabs
25*xabs = 98664
B
w5883
19734 >= 5*xabs
5*xabs = 19734
A
w5884
98676 >= 25*xabs
25*xabs = 98676
B

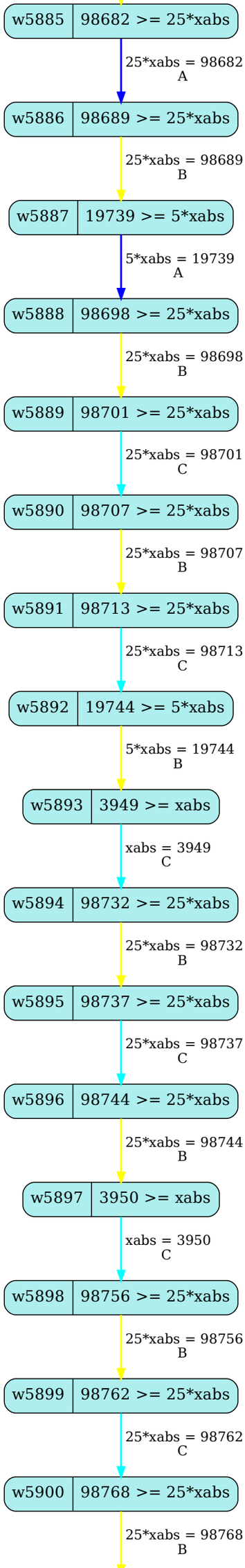
w5885
98682 >= 25*xabs
25*xabs = 98682
A
w5886
98689 >= 25*xabs
25*xabs = 98689
B
w5887
19739 >= 5*xabs
5*xabs = 19739
A
w5888
98698 >= 25*xabs
25*xabs = 98698
B
w5889
98701 >= 25*xabs
25*xabs = 98701
C
w5890
98707 >= 25*xabs
25*xabs = 98707
B
w5891
98713 >= 25*xabs
25*xabs = 98713
C
w5892
19744 >= 5*xabs
5*xabs = 19744
B
w5893
3949 >= xabs
xabs = 3949
C
w5894
98732 >= 25*xabs
25*xabs = 98732
B
w5895
98737 >= 25*xabs
25*xabs = 98737
C
w5896
98744 >= 25*xabs
25*xabs = 98744
B
w5897
3950 >= xabs
xabs = 3950
C
w5898
98756 >= 25*xabs
25*xabs = 98756
B
w5899
98762 >= 25*xabs
25*xabs = 98762
C
w5900
98768 >= 25*xabs
25*xabs = 98768
B

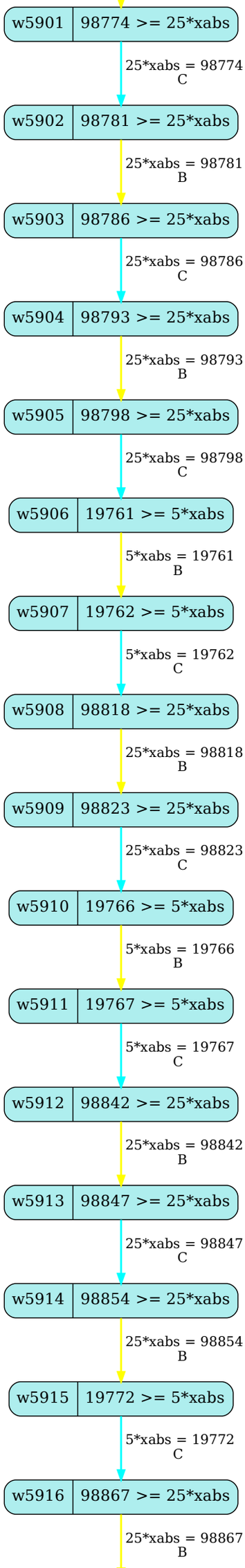
w5901
98774 >= 25*xabs
25*xabs = 98774
C
w5902
98781 >= 25*xabs
25*xabs = 98781
B
w5903
98786 >= 25*xabs
25*xabs = 98786
C
w5904
98793 >= 25*xabs
25*xabs = 98793
B
w5905
98798 >= 25*xabs
25*xabs = 98798
C
w5906
19761 >= 5*xabs
5*xabs = 19761
B
w5907
19762 >= 5*xabs
5*xabs = 19762
C
w5908
98818 >= 25*xabs
25*xabs = 98818
B
w5909
98823 >= 25*xabs
25*xabs = 98823
C
w5910
19766 >= 5*xabs
5*xabs = 19766
B
w5911
19767 >= 5*xabs
5*xabs = 19767
C
w5912
98842 >= 25*xabs
25*xabs = 98842
B
w5913
98847 >= 25*xabs
25*xabs = 98847
C
w5914
98854 >= 25*xabs
25*xabs = 98854
B
w5915
19772 >= 5*xabs
5*xabs = 19772
C
w5916
98867 >= 25*xabs
25*xabs = 98867
B

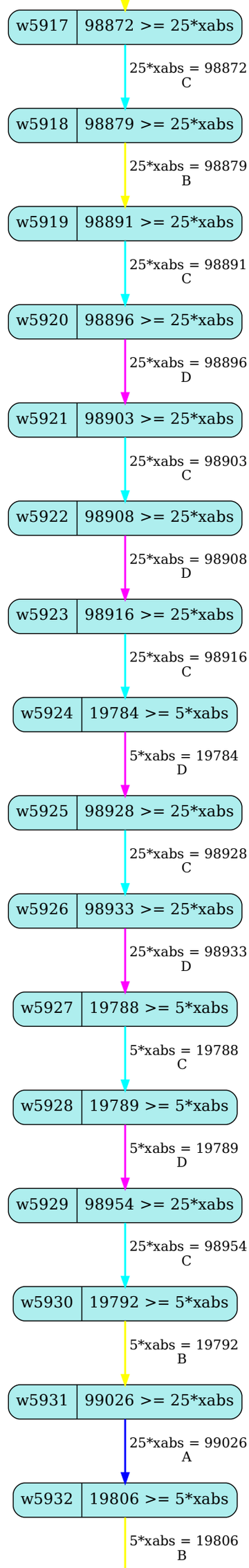
w5917
98872 >= 25*xabs
25*xabs = 98872
C
w5918
98879 >= 25*xabs
25*xabs = 98879
B
w5919
98891 >= 25*xabs
25*xabs = 98891
C
w5920
98896 >= 25*xabs
25*xabs = 98896
D
w5921
98903 >= 25*xabs
25*xabs = 98903
C
w5922
98908 >= 25*xabs
25*xabs = 98908
D
w5923
98916 >= 25*xabs
25*xabs = 98916
C
w5924
19784 >= 5*xabs
5*xabs = 19784
D
w5925
98928 >= 25*xabs
25*xabs = 98928
C
w5926
98933 >= 25*xabs
25*xabs = 98933
D
w5927
19788 >= 5*xabs
5*xabs = 19788
C
w5928
19789 >= 5*xabs
5*xabs = 19789
D
w5929
98954 >= 25*xabs
25*xabs = 98954
C
w5930
19792 >= 5*xabs
5*xabs = 19792
B
w5931
99026 >= 25*xabs
25*xabs = 99026
A
w5932
19806 >= 5*xabs
5*xabs = 19806
B

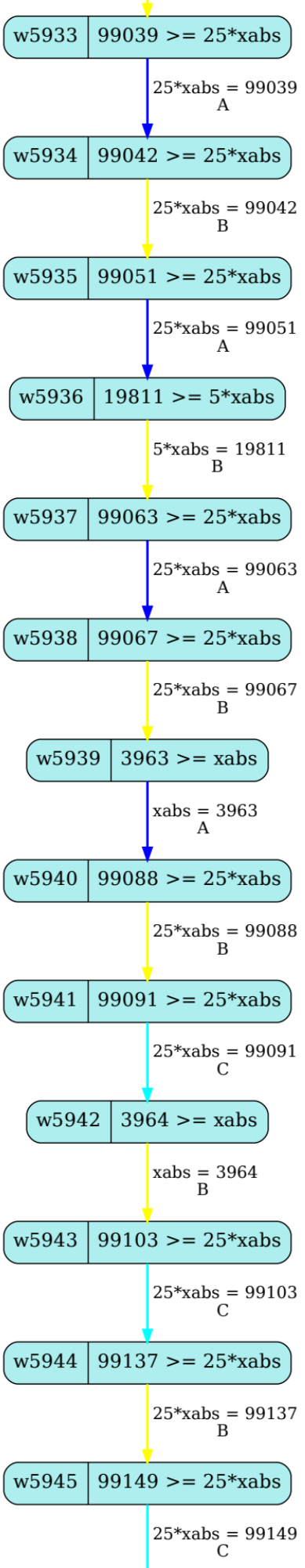
w5933
99039 >= 25*xabs
25*xabs = 99039
A
w5934
99042 >= 25*xabs
25*xabs = 99042
B
w5935
99051 >= 25*xabs
25*xabs = 99051
A
w5936
19811 >= 5*xabs
5*xabs = 19811
B
w5937
99063 >= 25*xabs
25*xabs = 99063
A
w5938
99067 >= 25*xabs
25*xabs = 99067
B
w5939
3963 >= xabs
xabs = 3963
A
w5940
99088 >= 25*xabs
25*xabs = 99088
B
w5941
99091 >= 25*xabs
25*xabs = 99091
C
w5942
3964 >= xabs
xabs = 3964
B
w5943
99103 >= 25*xabs
25*xabs = 99103
C
w5944
99137 >= 25*xabs
25*xabs = 99137
B
w5945
99149 >= 25*xabs
25*xabs = 99149
C

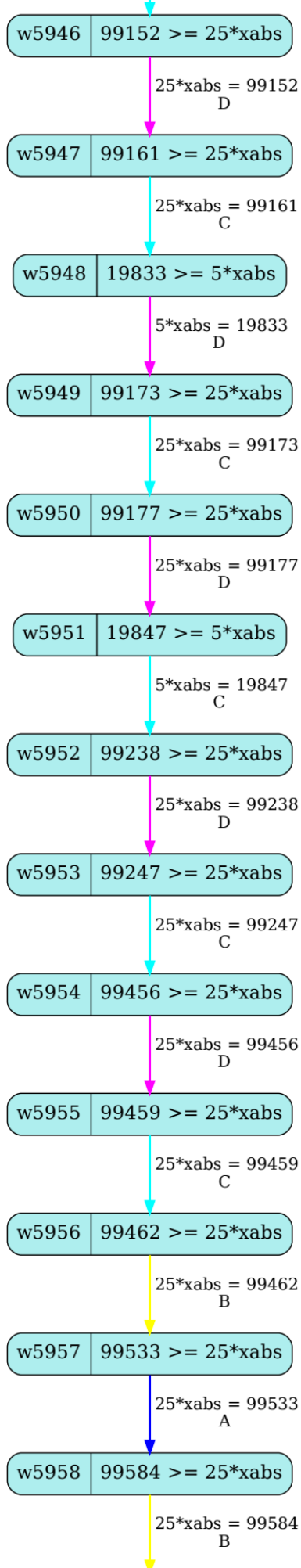
w5946
99152 >= 25*xabs
25*xabs = 99152
D
w5947
99161 >= 25*xabs
25*xabs = 99161
C
w5948
19833 >= 5*xabs
5*xabs = 19833
D
w5949
99173 >= 25*xabs
25*xabs = 99173
C
w5950
99177 >= 25*xabs
25*xabs = 99177
D
w5951
19847 >= 5*xabs
5*xabs = 19847
C
w5952
99238 >= 25*xabs
25*xabs = 99238
D
w5953
99247 >= 25*xabs
25*xabs = 99247
C
w5954
99456 >= 25*xabs
25*xabs = 99456
D
w5955
99459 >= 25*xabs
25*xabs = 99459
C
w5956
99462 >= 25*xabs
25*xabs = 99462
B
w5957
99533 >= 25*xabs
25*xabs = 99533
A
w5958
99584 >= 25*xabs
25*xabs = 99584
B

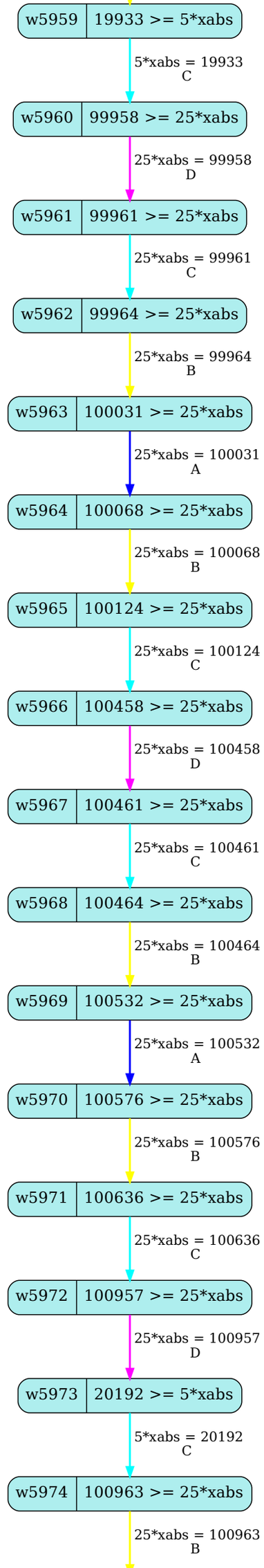
w5959
19933 >= 5*xabs
5*xabs = 19933
C
w5960
99958 >= 25*xabs
25*xabs = 99958
D
w5961
99961 >= 25*xabs
25*xabs = 99961
C
w5962
99964 >= 25*xabs
25*xabs = 99964
B
w5963
100031 >= 25*xabs
25*xabs = 100031
A
w5964
100068 >= 25*xabs
25*xabs = 100068
B
w5965
100124 >= 25*xabs
25*xabs = 100124
C
w5966
100458 >= 25*xabs
25*xabs = 100458
D
w5967
100461 >= 25*xabs
25*xabs = 100461
C
w5968
100464 >= 25*xabs
25*xabs = 100464
B
w5969
100532 >= 25*xabs
25*xabs = 100532
A
w5970
100576 >= 25*xabs
25*xabs = 100576
B
w5971
100636 >= 25*xabs
25*xabs = 100636
C
w5972
100957 >= 25*xabs
25*xabs = 100957
D
w5973
20192 >= 5*xabs
5*xabs = 20192
C
w5974
100963 >= 25*xabs
25*xabs = 100963
B

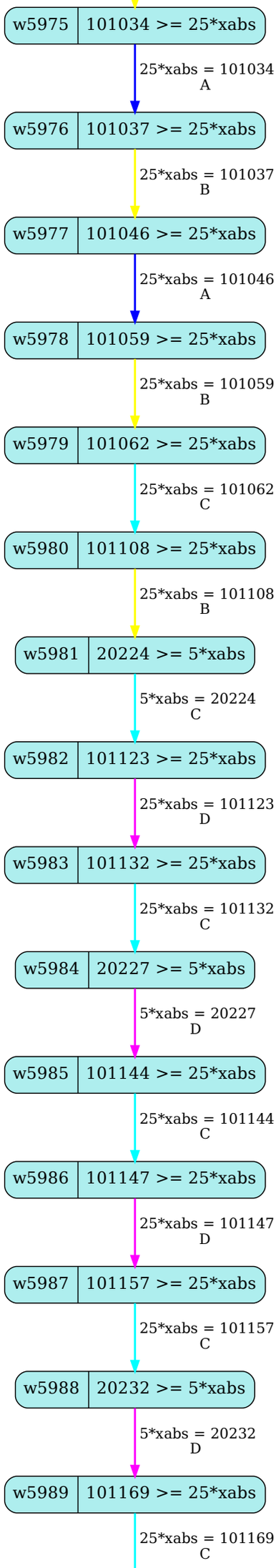
w5975
101034 >= 25*xabs
25*xabs = 101034
A
w5976
101037 >= 25*xabs
25*xabs = 101037
B
w5977
101046 >= 25*xabs
25*xabs = 101046
A
w5978
101059 >= 25*xabs
25*xabs = 101059
B
w5979
101062 >= 25*xabs
25*xabs = 101062
C
w5980
101108 >= 25*xabs
25*xabs = 101108
B
w5981
20224 >= 5*xabs
5*xabs = 20224
C
w5982
101123 >= 25*xabs
25*xabs = 101123
D
w5983
101132 >= 25*xabs
25*xabs = 101132
C
w5984
20227 >= 5*xabs
5*xabs = 20227
D
w5985
101144 >= 25*xabs
25*xabs = 101144
C
w5986
101147 >= 25*xabs
25*xabs = 101147
D
w5987
101157 >= 25*xabs
25*xabs = 101157
C
w5988
20232 >= 5*xabs
5*xabs = 20232
D
w5989
101169 >= 25*xabs
25*xabs = 101169
C

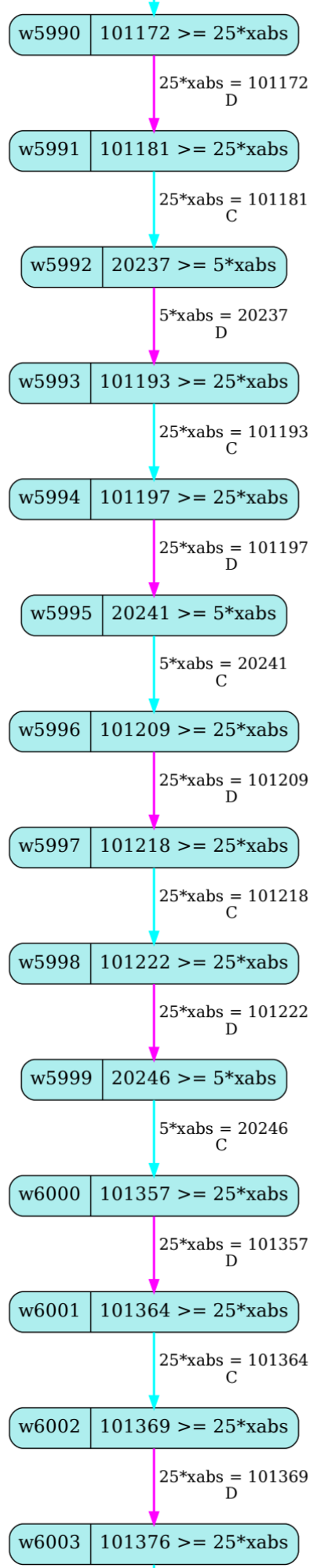
w5990
101172 >= 25*xabs
25*xabs = 101172
D
w5991
101181 >= 25*xabs
25*xabs = 101181
C
w5992
20237 >= 5*xabs
5*xabs = 20237
D
w5993
101193 >= 25*xabs
25*xabs = 101193
C
w5994
101197 >= 25*xabs
25*xabs = 101197
D
w5995
20241 >= 5*xabs
5*xabs = 20241
C
w5996
101209 >= 25*xabs
25*xabs = 101209
D
w5997
101218 >= 25*xabs
25*xabs = 101218
C
w5998
101222 >= 25*xabs
25*xabs = 101222
D
w5999
20246 >= 5*xabs
5*xabs = 20246
C
w6000
101357 >= 25*xabs
25*xabs = 101357
D
w6001
101364 >= 25*xabs
25*xabs = 101364
C
w6002
101369 >= 25*xabs
25*xabs = 101369
D
w6003
101376 >= 25*xabs

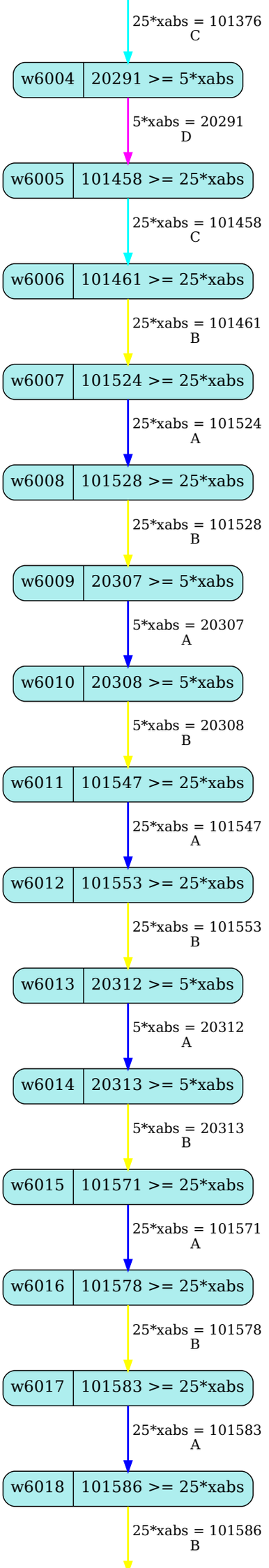
25*xabs = 101376
C
w6004
20291 >= 5*xabs
5*xabs = 20291
D
w6005
101458 >= 25*xabs
25*xabs = 101458
C
w6006
101461 >= 25*xabs
25*xabs = 101461
B
w6007
101524 >= 25*xabs
25*xabs = 101524
A
w6008
101528 >= 25*xabs
25*xabs = 101528
B
w6009
20307 >= 5*xabs
5*xabs = 20307
A
w6010
20308 >= 5*xabs
5*xabs = 20308
B
w6011
101547 >= 25*xabs
25*xabs = 101547
A
w6012
101553 >= 25*xabs
25*xabs = 101553
B
w6013
20312 >= 5*xabs
5*xabs = 20312
A
w6014
20313 >= 5*xabs
5*xabs = 20313
B
w6015
101571 >= 25*xabs
25*xabs = 101571
A
w6016
101578 >= 25*xabs
25*xabs = 101578
B
w6017
101583 >= 25*xabs
25*xabs = 101583
A
w6018
101586 >= 25*xabs
25*xabs = 101586
B

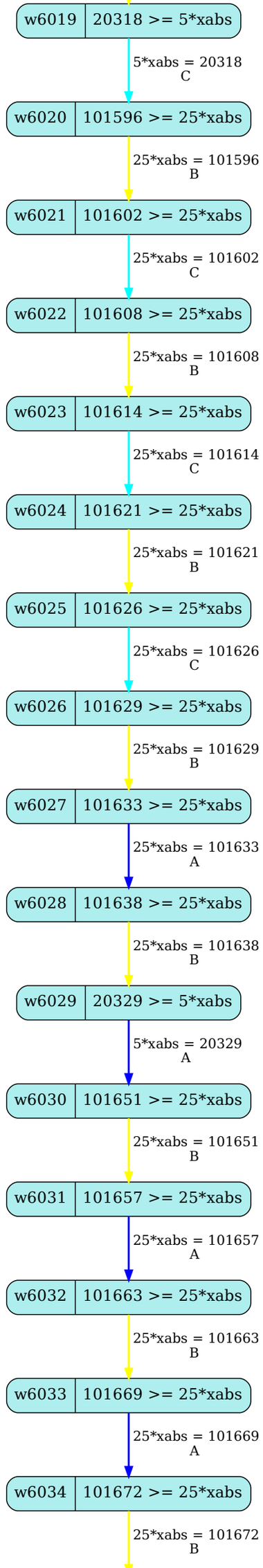
w6019
20318 >= 5*xabs
5*xabs = 20318
C
w6020
101596 >= 25*xabs
25*xabs = 101596
B
w6021
101602 >= 25*xabs
25*xabs = 101602
C
w6022
101608 >= 25*xabs
25*xabs = 101608
B
w6023
101614 >= 25*xabs
25*xabs = 101614
C
w6024
101621 >= 25*xabs
25*xabs = 101621
B
w6025
101626 >= 25*xabs
25*xabs = 101626
C
w6026
101629 >= 25*xabs
25*xabs = 101629
B
w6027
101633 >= 25*xabs
25*xabs = 101633
A
w6028
101638 >= 25*xabs
25*xabs = 101638
B
w6029
20329 >= 5*xabs
5*xabs = 20329
A
w6030
101651 >= 25*xabs
25*xabs = 101651
B
w6031
101657 >= 25*xabs
25*xabs = 101657
A
w6032
101663 >= 25*xabs
25*xabs = 101663
B
w6033
101669 >= 25*xabs
25*xabs = 101669
A
w6034
101672 >= 25*xabs
25*xabs = 101672
B

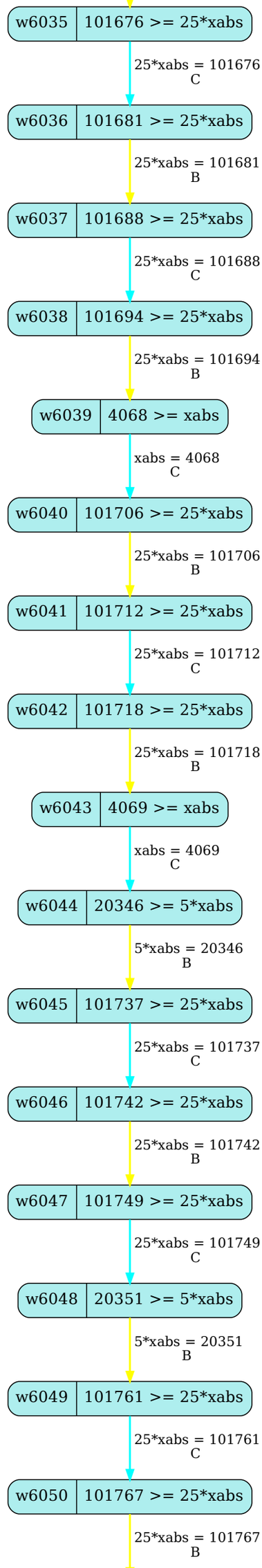
w6035
101676 >= 25*xabs
25*xabs = 101676
C
w6036
101681 >= 25*xabs
25*xabs = 101681
B
w6037
101688 >= 25*xabs
25*xabs = 101688
C
w6038
101694 >= 25*xabs
25*xabs = 101694
B
w6039
4068 >= xabs
xabs = 4068
C
w6040
101706 >= 25*xabs
25*xabs = 101706
B
w6041
101712 >= 25*xabs
25*xabs = 101712
C
w6042
101718 >= 25*xabs
25*xabs = 101718
B
w6043
4069 >= xabs
xabs = 4069
C
w6044
20346 >= 5*xabs
5*xabs = 20346
B
w6045
101737 >= 25*xabs
25*xabs = 101737
C
w6046
101742 >= 25*xabs
25*xabs = 101742
B
w6047
101749 >= 25*xabs
25*xabs = 101749
C
w6048
20351 >= 5*xabs
5*xabs = 20351
B
w6049
101761 >= 25*xabs
25*xabs = 101761
C
w6050
101767 >= 25*xabs
25*xabs = 101767
B

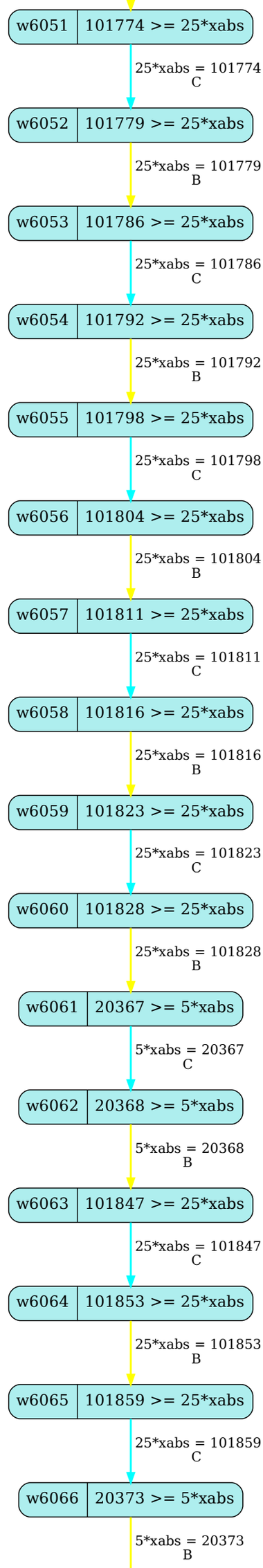
w6051
101774 >= 25*xabs
25*xabs = 101774
C
w6052
101779 >= 25*xabs
25*xabs = 101779
B
w6053
101786 >= 25*xabs
25*xabs = 101786
C
w6054
101792 >= 25*xabs
25*xabs = 101792
B
w6055
101798 >= 25*xabs
25*xabs = 101798
C
w6056
101804 >= 25*xabs
25*xabs = 101804
B
w6057
101811 >= 25*xabs
25*xabs = 101811
C
w6058
101816 >= 25*xabs
25*xabs = 101816
B
w6059
101823 >= 25*xabs
25*xabs = 101823
C
w6060
101828 >= 25*xabs
25*xabs = 101828
B
w6061
20367 >= 5*xabs
5*xabs = 20367
C
w6062
20368 >= 5*xabs
5*xabs = 20368
B
w6063
101847 >= 25*xabs
25*xabs = 101847
C
w6064
101853 >= 25*xabs
25*xabs = 101853
B
w6065
101859 >= 25*xabs
25*xabs = 101859
C
w6066
20373 >= 5*xabs
5*xabs = 20373
B

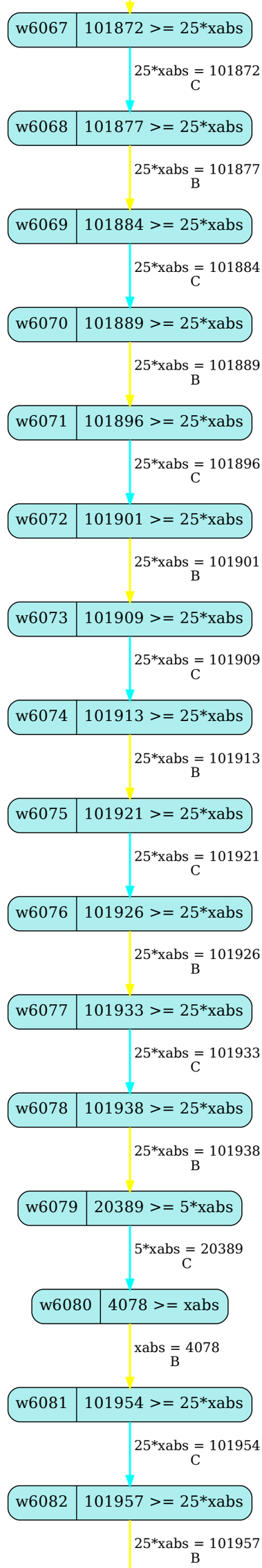
w6067
101872 >= 25*xabs
25*xabs = 101872
C
w6068
101877 >= 25*xabs
25*xabs = 101877
B
w6069
101884 >= 25*xabs
25*xabs = 101884
C
w6070
101889 >= 25*xabs
25*xabs = 101889
B
w6071
101896 >= 25*xabs
25*xabs = 101896
C
w6072
101901 >= 25*xabs
25*xabs = 101901
B
w6073
101909 >= 25*xabs
25*xabs = 101909
C
w6074
101913 >= 25*xabs
25*xabs = 101913
B
w6075
101921 >= 25*xabs
25*xabs = 101921
C
w6076
101926 >= 25*xabs
25*xabs = 101926
B
w6077
101933 >= 25*xabs
25*xabs = 101933
C
w6078
101938 >= 25*xabs
25*xabs = 101938
B
w6079
20389 >= 5*xabs
5*xabs = 20389
C
w6080
4078 >= xabs
xabs = 4078
B
w6081
101954 >= 25*xabs
25*xabs = 101954
C
w6082
101957 >= 25*xabs
25*xabs = 101957
B

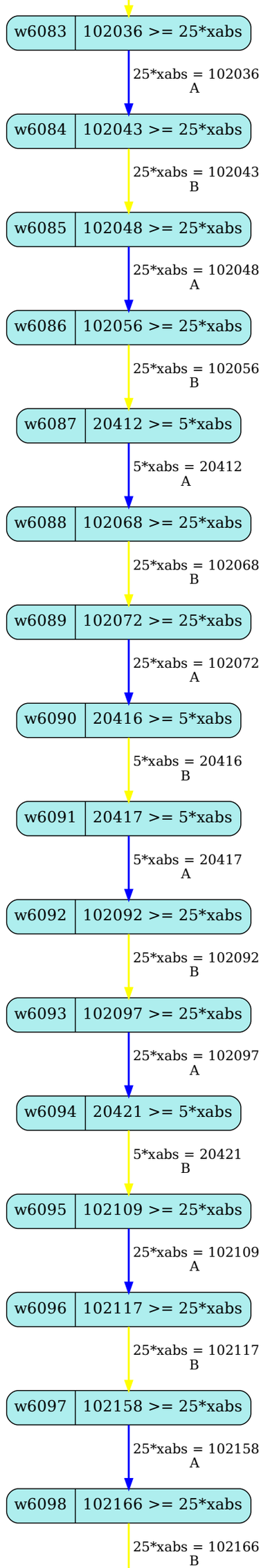
w6083
102036 >= 25*xabs
25*xabs = 102036
A
w6084
102043 >= 25*xabs
25*xabs = 102043
B
w6085
102048 >= 25*xabs
25*xabs = 102048
A
w6086
102056 >= 25*xabs
25*xabs = 102056
B
w6087
20412 >= 5*xabs
5*xabs = 20412
A
w6088
102068 >= 25*xabs
25*xabs = 102068
B
w6089
102072 >= 25*xabs
25*xabs = 102072
A
w6090
20416 >= 5*xabs
5*xabs = 20416
B
w6091
20417 >= 5*xabs
5*xabs = 20417
A
w6092
102092 >= 25*xabs
25*xabs = 102092
B
w6093
102097 >= 25*xabs
25*xabs = 102097
A
w6094
20421 >= 5*xabs
5*xabs = 20421
B
w6095
102109 >= 25*xabs
25*xabs = 102109
A
w6096
102117 >= 25*xabs
25*xabs = 102117
B
w6097
102158 >= 25*xabs
25*xabs = 102158
A
w6098
102166 >= 25*xabs
25*xabs = 102166
B

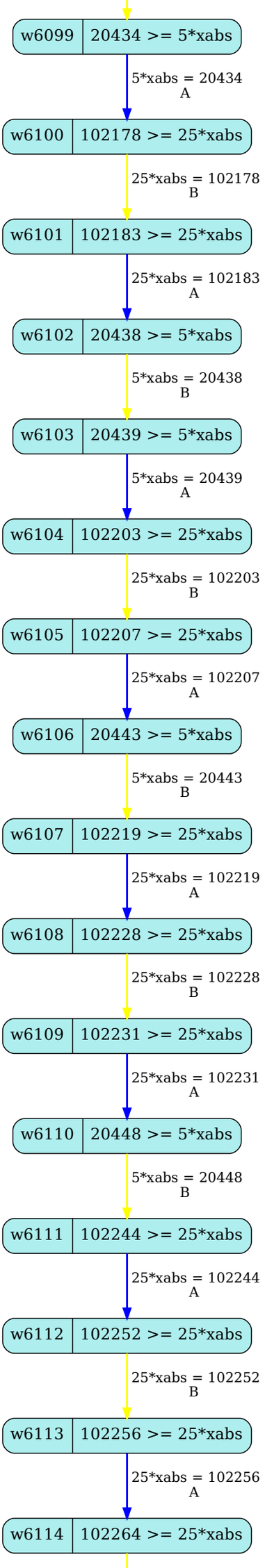
w6099
20434 >= 5*xabs
5*xabs = 20434
A
w6100
102178 >= 25*xabs
25*xabs = 102178
B
w6101
102183 >= 25*xabs
25*xabs = 102183
A
w6102
20438 >= 5*xabs
5*xabs = 20438
B
w6103
20439 >= 5*xabs
5*xabs = 20439
A
w6104
102203 >= 25*xabs
25*xabs = 102203
B
w6105
102207 >= 25*xabs
25*xabs = 102207
A
w6106
20443 >= 5*xabs
5*xabs = 20443
B
w6107
102219 >= 25*xabs
25*xabs = 102219
A
w6108
102228 >= 25*xabs
25*xabs = 102228
B
w6109
102231 >= 25*xabs
25*xabs = 102231
A
w6110
20448 >= 5*xabs
5*xabs = 20448
B
w6111
102244 >= 25*xabs
25*xabs = 102244
A
w6112
102252 >= 25*xabs
25*xabs = 102252
B
w6113
102256 >= 25*xabs
25*xabs = 102256
A
w6114
102264 >= 25*xabs

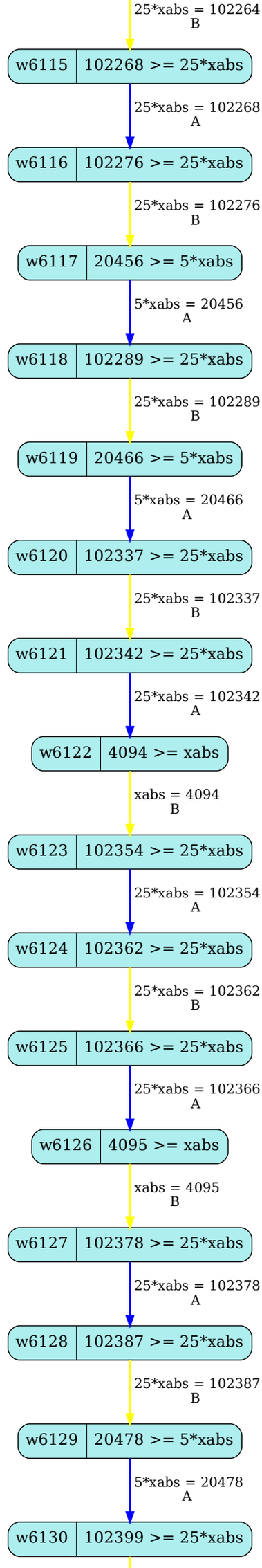
25*xabs = 102264
B
w6115
102268 >= 25*xabs
25*xabs = 102268
A
w6116
102276 >= 25*xabs
25*xabs = 102276
B
w6117
20456 >= 5*xabs
5*xabs = 20456
A
w6118
102289 >= 25*xabs
25*xabs = 102289
B
w6119
20466 >= 5*xabs
5*xabs = 20466
A
w6120
102337 >= 25*xabs
25*xabs = 102337
B
w6121
102342 >= 25*xabs
25*xabs = 102342
A
w6122
4094 >= xabs
xabs = 4094
B
w6123
102354 >= 25*xabs
25*xabs = 102354
A
w6124
102362 >= 25*xabs
25*xabs = 102362
B
w6125
102366 >= 25*xabs
25*xabs = 102366
A
w6126
4095 >= xabs
xabs = 4095
B
w6127
102378 >= 25*xabs
25*xabs = 102378
A
w6128
102387 >= 25*xabs
25*xabs = 102387
B
w6129
20478 >= 5*xabs
5*xabs = 20478
A
w6130
102399 >= 25*xabs

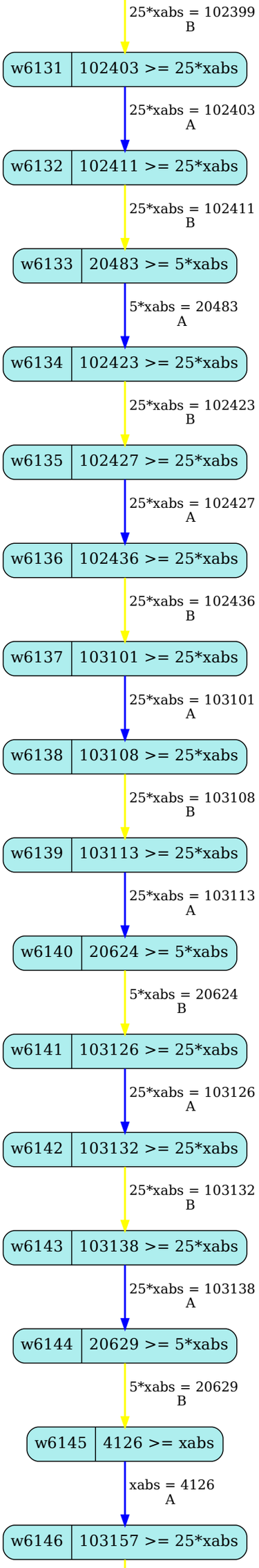
25*xabs = 102399
B
w6131
102403 >= 25*xabs
25*xabs = 102403
A
w6132
102411 >= 25*xabs
25*xabs = 102411
B
w6133
20483 >= 5*xabs
5*xabs = 20483
A
w6134
102423 >= 25*xabs
25*xabs = 102423
B
w6135
102427 >= 25*xabs
25*xabs = 102427
A
w6136
102436 >= 25*xabs
25*xabs = 102436
B
w6137
103101 >= 25*xabs
25*xabs = 103101
A
w6138
103108 >= 25*xabs
25*xabs = 103108
B
w6139
103113 >= 25*xabs
25*xabs = 103113
A
w6140
20624 >= 5*xabs
5*xabs = 20624
B
w6141
103126 >= 25*xabs
25*xabs = 103126
A
w6142
103132 >= 25*xabs
25*xabs = 103132
B
w6143
103138 >= 25*xabs
25*xabs = 103138
A
w6144
20629 >= 5*xabs
5*xabs = 20629
B
w6145
4126 >= xabs
xabs = 4126
A
w6146
103157 >= 25*xabs

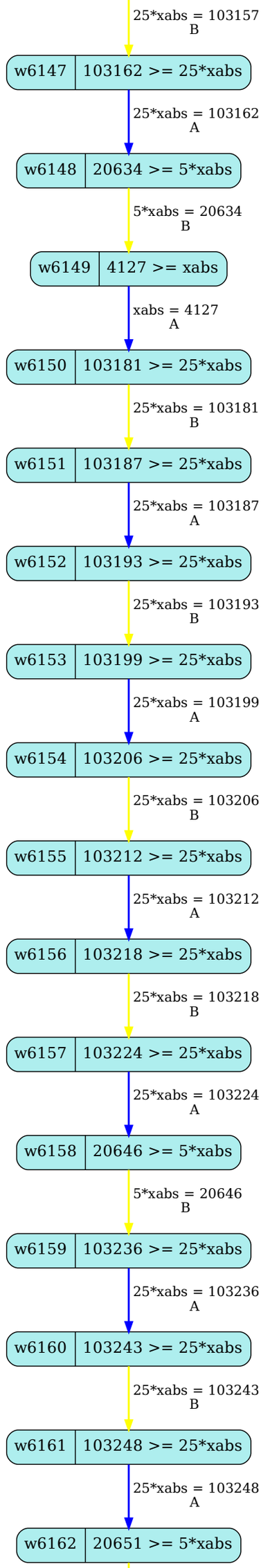
25*xabs = 103157
B
w6147
103162 >= 25*xabs
25*xabs = 103162
A
w6148
20634 >= 5*xabs
5*xabs = 20634
B
w6149
4127 >= xabs
xabs = 4127
A
w6150
103181 >= 25*xabs
25*xabs = 103181
B
w6151
103187 >= 25*xabs
25*xabs = 103187
A
w6152
103193 >= 25*xabs
25*xabs = 103193
B
w6153
103199 >= 25*xabs
25*xabs = 103199
A
w6154
103206 >= 25*xabs
25*xabs = 103206
B
w6155
103212 >= 25*xabs
25*xabs = 103212
A
w6156
103218 >= 25*xabs
25*xabs = 103218
B
w6157
103224 >= 25*xabs
25*xabs = 103224
A
w6158
20646 >= 5*xabs
5*xabs = 20646
B
w6159
103236 >= 25*xabs
25*xabs = 103236
A
w6160
103243 >= 25*xabs
25*xabs = 103243
B
w6161
103248 >= 25*xabs
25*xabs = 103248
A
w6162
20651 >= 5*xabs

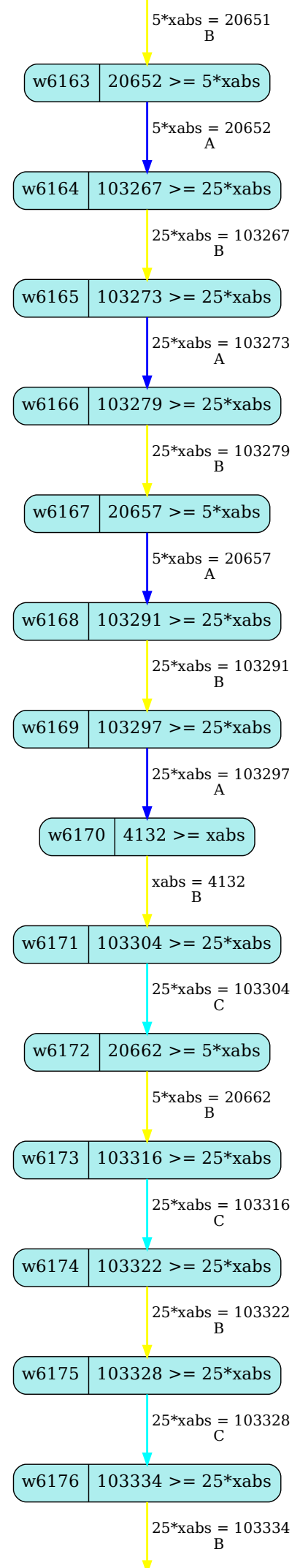
5*xabs = 20651
B
w6163
20652 >= 5*xabs
5*xabs = 20652
A
w6164
103267 >= 25*xabs
25*xabs = 103267
B
w6165
103273 >= 25*xabs
25*xabs = 103273
A
w6166
103279 >= 25*xabs
25*xabs = 103279
B
w6167
20657 >= 5*xabs
5*xabs = 20657
A
w6168
103291 >= 25*xabs
25*xabs = 103291
B
w6169
103297 >= 25*xabs
25*xabs = 103297
A
w6170
4132 >= xabs
xabs = 4132
B
w6171
103304 >= 25*xabs
25*xabs = 103304
C
w6172
20662 >= 5*xabs
5*xabs = 20662
B
w6173
103316 >= 25*xabs
25*xabs = 103316
C
w6174
103322 >= 25*xabs
25*xabs = 103322
B
w6175
103328 >= 25*xabs
25*xabs = 103328
C
w6176
103334 >= 25*xabs
25*xabs = 103334
B

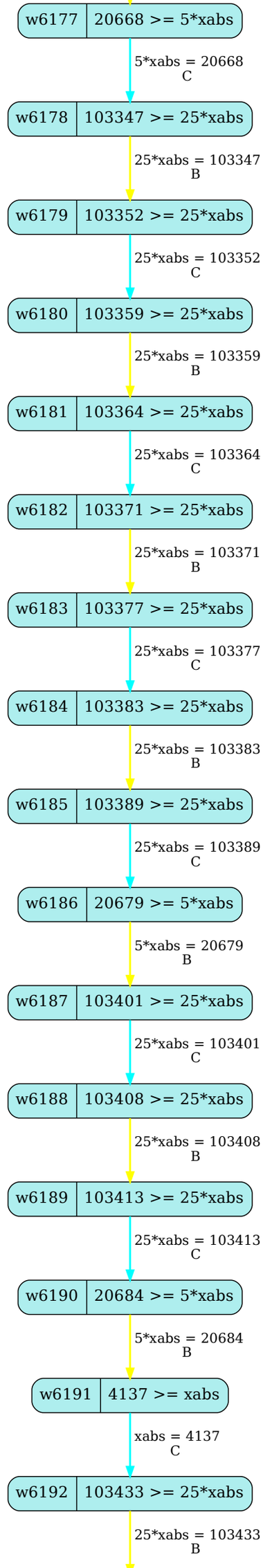
w6177
20668 >= 5*xabs
5*xabs = 20668
C
w6178
103347 >= 25*xabs
25*xabs = 103347
B
w6179
103352 >= 25*xabs
25*xabs = 103352
C
w6180
103359 >= 25*xabs
25*xabs = 103359
B
w6181
103364 >= 25*xabs
25*xabs = 103364
C
w6182
103371 >= 25*xabs
25*xabs = 103371
B
w6183
103377 >= 25*xabs
25*xabs = 103377
C
w6184
103383 >= 25*xabs
25*xabs = 103383
B
w6185
103389 >= 25*xabs
25*xabs = 103389
C
w6186
20679 >= 5*xabs
5*xabs = 20679
B
w6187
103401 >= 25*xabs
25*xabs = 103401
C
w6188
103408 >= 25*xabs
25*xabs = 103408
B
w6189
103413 >= 25*xabs
25*xabs = 103413
C
w6190
20684 >= 5*xabs
5*xabs = 20684
B
w6191
4137 >= xabs
xabs = 4137
C
w6192
103433 >= 25*xabs
25*xabs = 103433
B

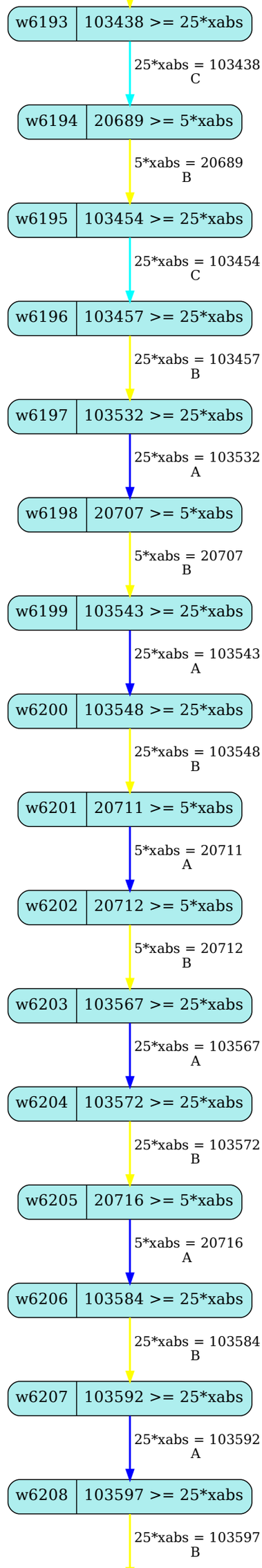
w6193
103438 >= 25*xabs
25*xabs = 103438
C
w6194
20689 >= 5*xabs
5*xabs = 20689
B
w6195
103454 >= 25*xabs
25*xabs = 103454
C
w6196
103457 >= 25*xabs
25*xabs = 103457
B
w6197
103532 >= 25*xabs
25*xabs = 103532
A
w6198
20707 >= 5*xabs
5*xabs = 20707
B
w6199
103543 >= 25*xabs
25*xabs = 103543
A
w6200
103548 >= 25*xabs
25*xabs = 103548
B
w6201
20711 >= 5*xabs
5*xabs = 20711
A
w6202
20712 >= 5*xabs
5*xabs = 20712
B
w6203
103567 >= 25*xabs
25*xabs = 103567
A
w6204
103572 >= 25*xabs
25*xabs = 103572
B
w6205
20716 >= 5*xabs
5*xabs = 20716
A
w6206
103584 >= 25*xabs
25*xabs = 103584
B
w6207
103592 >= 25*xabs
25*xabs = 103592
A
w6208
103597 >= 25*xabs
25*xabs = 103597
B

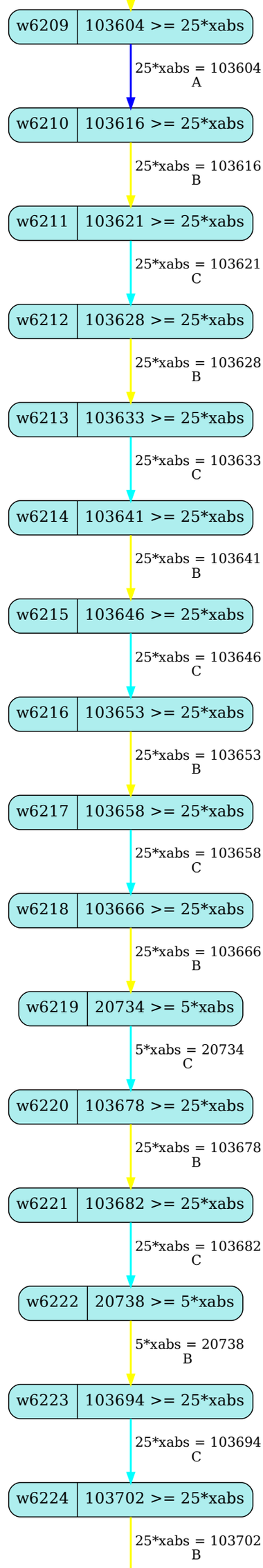
w6209
103604 >= 25*xabs
25*xabs = 103604
A
w6210
103616 >= 25*xabs
25*xabs = 103616
B
w6211
103621 >= 25*xabs
25*xabs = 103621
C
w6212
103628 >= 25*xabs
25*xabs = 103628
B
w6213
103633 >= 25*xabs
25*xabs = 103633
C
w6214
103641 >= 25*xabs
25*xabs = 103641
B
w6215
103646 >= 25*xabs
25*xabs = 103646
C
w6216
103653 >= 25*xabs
25*xabs = 103653
B
w6217
103658 >= 25*xabs
25*xabs = 103658
C
w6218
103666 >= 25*xabs
25*xabs = 103666
B
w6219
20734 >= 5*xabs
5*xabs = 20734
C
w6220
103678 >= 25*xabs
25*xabs = 103678
B
w6221
103682 >= 25*xabs
25*xabs = 103682
C
w6222
20738 >= 5*xabs
5*xabs = 20738
B
w6223
103694 >= 25*xabs
25*xabs = 103694
C
w6224
103702 >= 25*xabs
25*xabs = 103702
B

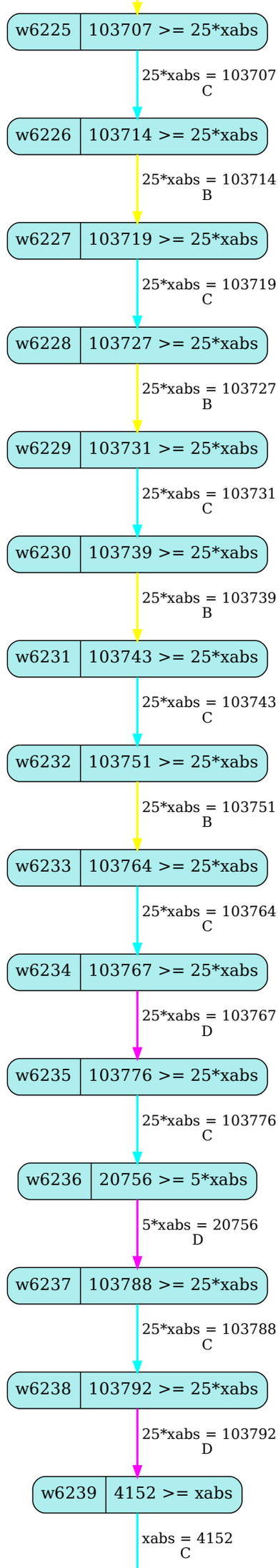
w6225
103707 >= 25*xabs
25*xabs = 103707
C
w6226
103714 >= 25*xabs
25*xabs = 103714
B
w6227
103719 >= 25*xabs
25*xabs = 103719
C
w6228
103727 >= 25*xabs
25*xabs = 103727
B
w6229
103731 >= 25*xabs
25*xabs = 103731
C
w6230
103739 >= 25*xabs
25*xabs = 103739
B
w6231
103743 >= 25*xabs
25*xabs = 103743
C
w6232
103751 >= 25*xabs
25*xabs = 103751
B
w6233
103764 >= 25*xabs
25*xabs = 103764
C
w6234
103767 >= 25*xabs
25*xabs = 103767
D
w6235
103776 >= 25*xabs
25*xabs = 103776
C
w6236
20756 >= 5*xabs
5*xabs = 20756
D
w6237
103788 >= 25*xabs
25*xabs = 103788
C
w6238
103792 >= 25*xabs
25*xabs = 103792
D
w6239
4152 >= xabs
xabs = 4152
C

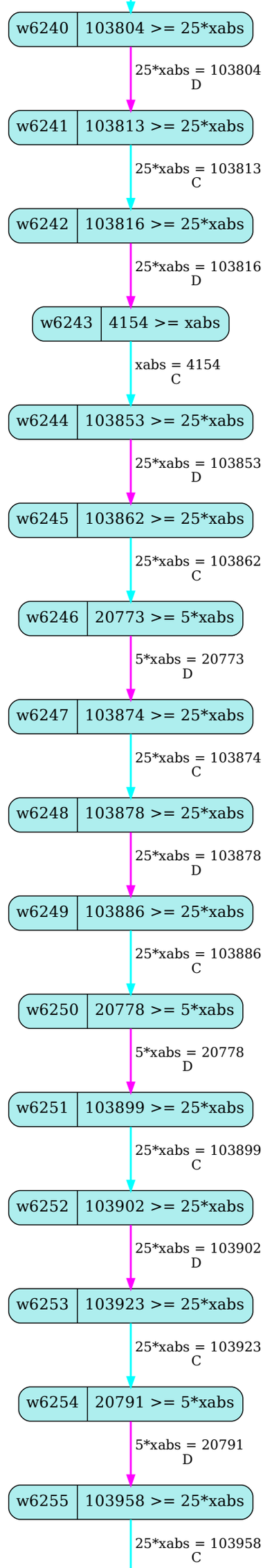
w6240
103804 >= 25*xabs
25*xabs = 103804
D
w6241
103813 >= 25*xabs
25*xabs = 103813
C
w6242
103816 >= 25*xabs
25*xabs = 103816
D
w6243
4154 >= xabs
xabs = 4154
C
w6244
103853 >= 25*xabs
25*xabs = 103853
D
w6245
103862 >= 25*xabs
25*xabs = 103862
C
w6246
20773 >= 5*xabs
5*xabs = 20773
D
w6247
103874 >= 25*xabs
25*xabs = 103874
C
w6248
103878 >= 25*xabs
25*xabs = 103878
D
w6249
103886 >= 25*xabs
25*xabs = 103886
C
w6250
20778 >= 5*xabs
5*xabs = 20778
D
w6251
103899 >= 25*xabs
25*xabs = 103899
C
w6252
103902 >= 25*xabs
25*xabs = 103902
D
w6253
103923 >= 25*xabs
25*xabs = 103923
C
w6254
20791 >= 5*xabs
5*xabs = 20791
D
w6255
103958 >= 25*xabs
25*xabs = 103958
C

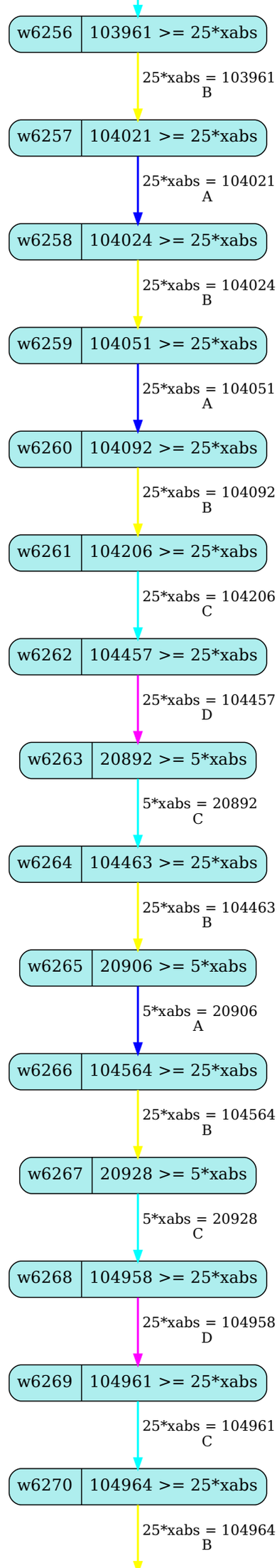
w6256
103961 >= 25*xabs
25*xabs = 103961
B
w6257
104021 >= 25*xabs
25*xabs = 104021
A
w6258
104024 >= 25*xabs
25*xabs = 104024
B
w6259
104051 >= 25*xabs
25*xabs = 104051
A
w6260
104092 >= 25*xabs
25*xabs = 104092
B
w6261
104206 >= 25*xabs
25*xabs = 104206
C
w6262
104457 >= 25*xabs
25*xabs = 104457
D
w6263
20892 >= 5*xabs
5*xabs = 20892
C
w6264
104463 >= 25*xabs
25*xabs = 104463
B
w6265
20906 >= 5*xabs
5*xabs = 20906
A
w6266
104564 >= 25*xabs
25*xabs = 104564
B
w6267
20928 >= 5*xabs
5*xabs = 20928
C
w6268
104958 >= 25*xabs
25*xabs = 104958
D
w6269
104961 >= 25*xabs
25*xabs = 104961
C
w6270
104964 >= 25*xabs
25*xabs = 104964
B

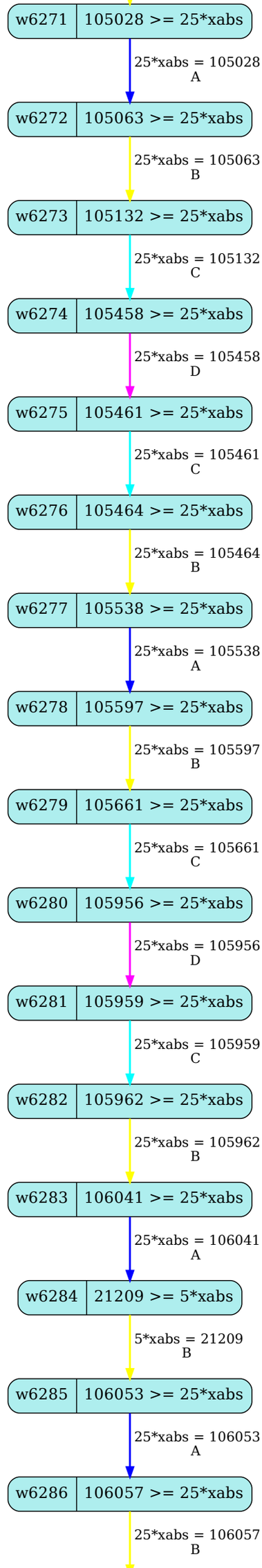
w6271
105028 >= 25*xabs
25*xabs = 105028
A
w6272
105063 >= 25*xabs
25*xabs = 105063
B
w6273
105132 >= 25*xabs
25*xabs = 105132
C
w6274
105458 >= 25*xabs
25*xabs = 105458
D
w6275
105461 >= 25*xabs
25*xabs = 105461
C
w6276
105464 >= 25*xabs
25*xabs = 105464
B
w6277
105538 >= 25*xabs
25*xabs = 105538
A
w6278
105597 >= 25*xabs
25*xabs = 105597
B
w6279
105661 >= 25*xabs
25*xabs = 105661
C
w6280
105956 >= 25*xabs
25*xabs = 105956
D
w6281
105959 >= 25*xabs
25*xabs = 105959
C
w6282
105962 >= 25*xabs
25*xabs = 105962
B
w6283
106041 >= 25*xabs
25*xabs = 106041
A
w6284
21209 >= 5*xabs
5*xabs = 21209
B
w6285
106053 >= 25*xabs
25*xabs = 106053
A
w6286
106057 >= 25*xabs
25*xabs = 106057
B

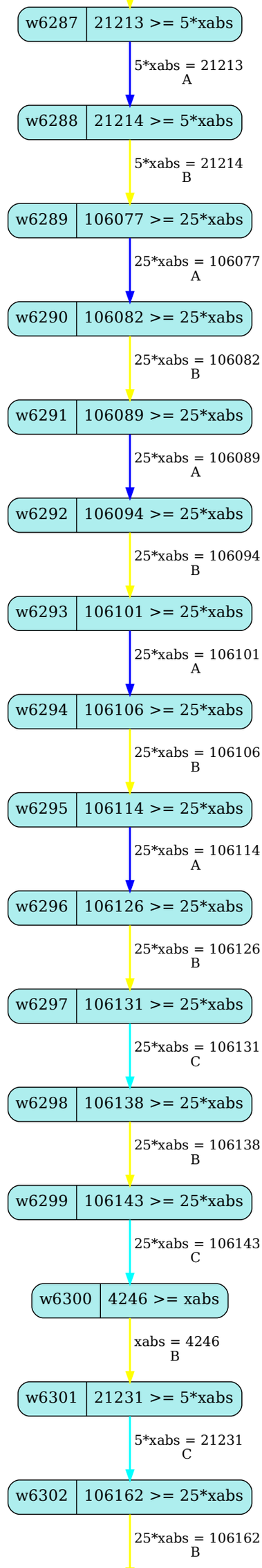
w6287
21213 >= 5*xabs
5*xabs = 21213
A
w6288
21214 >= 5*xabs
5*xabs = 21214
B
w6289
106077 >= 25*xabs
25*xabs = 106077
A
w6290
106082 >= 25*xabs
25*xabs = 106082
B
w6291
106089 >= 25*xabs
25*xabs = 106089
A
w6292
106094 >= 25*xabs
25*xabs = 106094
B
w6293
106101 >= 25*xabs
25*xabs = 106101
A
w6294
106106 >= 25*xabs
25*xabs = 106106
B
w6295
106114 >= 25*xabs
25*xabs = 106114
A
w6296
106126 >= 25*xabs
25*xabs = 106126
B
w6297
106131 >= 25*xabs
25*xabs = 106131
C
w6298
106138 >= 25*xabs
25*xabs = 106138
B
w6299
106143 >= 25*xabs
25*xabs = 106143
C
w6300
4246 >= xabs
xabs = 4246
B
w6301
21231 >= 5*xabs
5*xabs = 21231
C
w6302
106162 >= 25*xabs
25*xabs = 106162
B

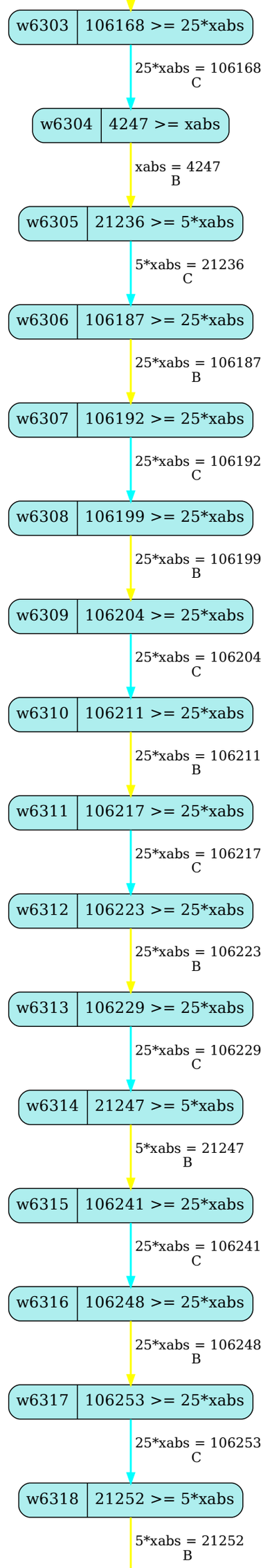
w6303
106168 >= 25*xabs
25*xabs = 106168
C
w6304
4247 >= xabs
xabs = 4247
B
w6305
21236 >= 5*xabs
5*xabs = 21236
C
w6306
106187 >= 25*xabs
25*xabs = 106187
B
w6307
106192 >= 25*xabs
25*xabs = 106192
C
w6308
106199 >= 25*xabs
25*xabs = 106199
B
w6309
106204 >= 25*xabs
25*xabs = 106204
C
w6310
106211 >= 25*xabs
25*xabs = 106211
B
w6311
106217 >= 25*xabs
25*xabs = 106217
C
w6312
106223 >= 25*xabs
25*xabs = 106223
B
w6313
106229 >= 25*xabs
25*xabs = 106229
C
w6314
21247 >= 5*xabs
5*xabs = 21247
B
w6315
106241 >= 25*xabs
25*xabs = 106241
C
w6316
106248 >= 25*xabs
25*xabs = 106248
B
w6317
106253 >= 25*xabs
25*xabs = 106253
C
w6318
21252 >= 5*xabs
5*xabs = 21252
B

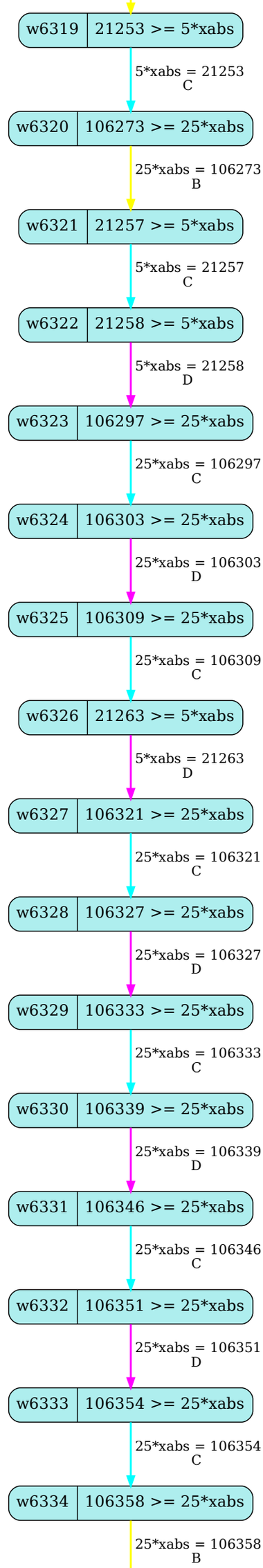
w6319
21253 >= 5*xabs
5*xabs = 21253
C
w6320
106273 >= 25*xabs
25*xabs = 106273
B
w6321
21257 >= 5*xabs
5*xabs = 21257
C
w6322
21258 >= 5*xabs
5*xabs = 21258
D
w6323
106297 >= 25*xabs
25*xabs = 106297
C
w6324
106303 >= 25*xabs
25*xabs = 106303
D
w6325
106309 >= 25*xabs
25*xabs = 106309
C
w6326
21263 >= 5*xabs
5*xabs = 21263
D
w6327
106321 >= 25*xabs
25*xabs = 106321
C
w6328
106327 >= 25*xabs
25*xabs = 106327
D
w6329
106333 >= 25*xabs
25*xabs = 106333
C
w6330
106339 >= 25*xabs
25*xabs = 106339
D
w6331
106346 >= 25*xabs
25*xabs = 106346
C
w6332
106351 >= 25*xabs
25*xabs = 106351
D
w6333
106354 >= 25*xabs
25*xabs = 106354
C
w6334
106358 >= 25*xabs
25*xabs = 106358
B

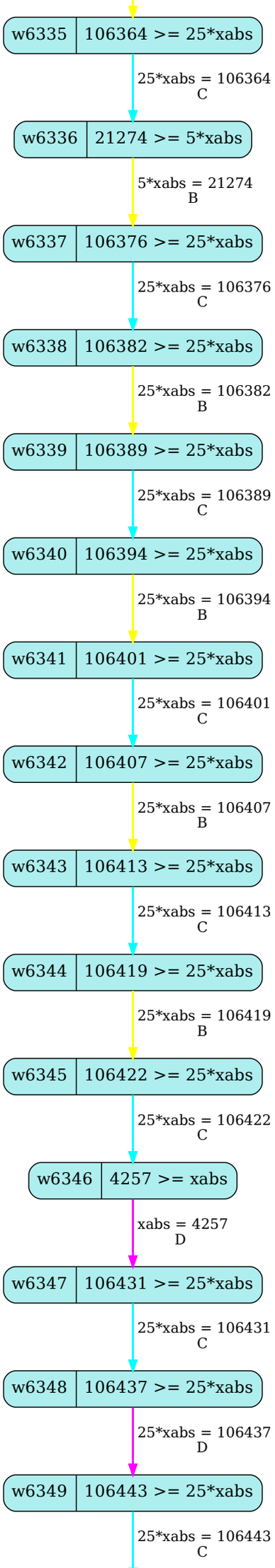
w6335
106364 >= 25*xabs
25*xabs = 106364
C
w6336
21274 >= 5*xabs
5*xabs = 21274
B
w6337
106376 >= 25*xabs
25*xabs = 106376
C
w6338
106382 >= 25*xabs
25*xabs = 106382
B
w6339
106389 >= 25*xabs
25*xabs = 106389
C
w6340
106394 >= 25*xabs
25*xabs = 106394
B
w6341
106401 >= 25*xabs
25*xabs = 106401
C
w6342
106407 >= 25*xabs
25*xabs = 106407
B
w6343
106413 >= 25*xabs
25*xabs = 106413
C
w6344
106419 >= 25*xabs
25*xabs = 106419
B
w6345
106422 >= 25*xabs
25*xabs = 106422
C
w6346
4257 >= xabs
xabs = 4257
D
w6347
106431 >= 25*xabs
25*xabs = 106431
C
w6348
106437 >= 25*xabs
25*xabs = 106437
D
w6349
106443 >= 25*xabs
25*xabs = 106443
C

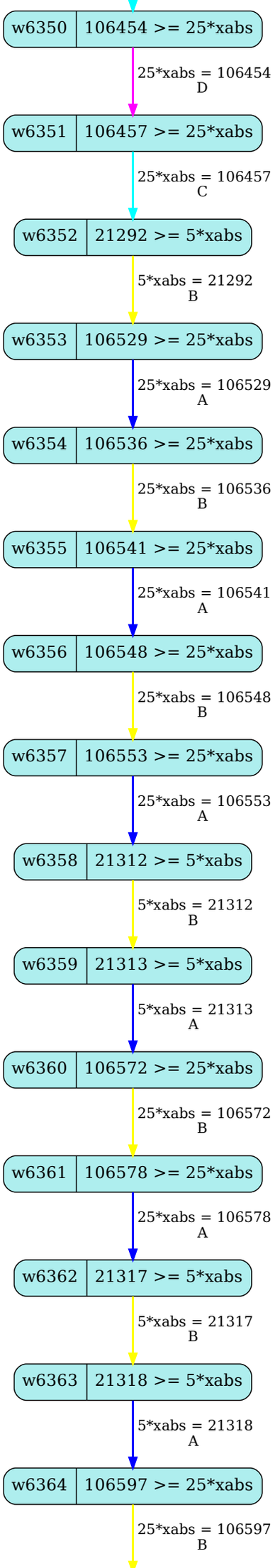
w6350
106454 >= 25*xabs
25*xabs = 106454
D
w6351
106457 >= 25*xabs
25*xabs = 106457
C
w6352
21292 >= 5*xabs
5*xabs = 21292
B
w6353
106529 >= 25*xabs
25*xabs = 106529
A
w6354
106536 >= 25*xabs
25*xabs = 106536
B
w6355
106541 >= 25*xabs
25*xabs = 106541
A
w6356
106548 >= 25*xabs
25*xabs = 106548
B
w6357
106553 >= 25*xabs
25*xabs = 106553
A
w6358
21312 >= 5*xabs
5*xabs = 21312
B
w6359
21313 >= 5*xabs
5*xabs = 21313
A
w6360
106572 >= 25*xabs
25*xabs = 106572
B
w6361
106578 >= 25*xabs
25*xabs = 106578
A
w6362
21317 >= 5*xabs
5*xabs = 21317
B
w6363
21318 >= 5*xabs
5*xabs = 21318
A
w6364
106597 >= 25*xabs
25*xabs = 106597
B

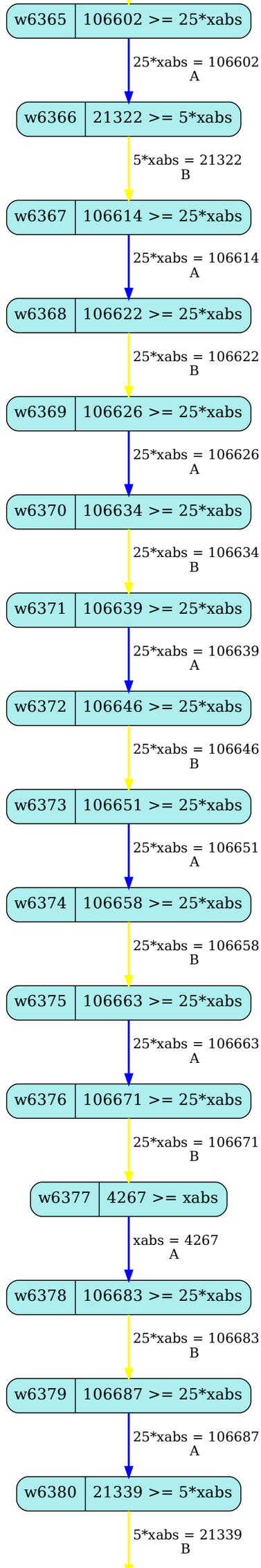
w6365
106602 >= 25*xabs
25*xabs = 106602
A
w6366
21322 >= 5*xabs
5*xabs = 21322
B
w6367
106614 >= 25*xabs
25*xabs = 106614
A
w6368
106622 >= 25*xabs
25*xabs = 106622
B
w6369
106626 >= 25*xabs
25*xabs = 106626
A
w6370
106634 >= 25*xabs
25*xabs = 106634
B
w6371
106639 >= 25*xabs
25*xabs = 106639
A
w6372
106646 >= 25*xabs
25*xabs = 106646
B
w6373
106651 >= 25*xabs
25*xabs = 106651
A
w6374
106658 >= 25*xabs
25*xabs = 106658
B
w6375
106663 >= 25*xabs
25*xabs = 106663
A
w6376
106671 >= 25*xabs
25*xabs = 106671
B
w6377
4267 >= xabs
xabs = 4267
A
w6378
106683 >= 25*xabs
25*xabs = 106683
B
w6379
106687 >= 25*xabs
25*xabs = 106687
A
w6380
21339 >= 5*xabs
5*xabs = 21339
B

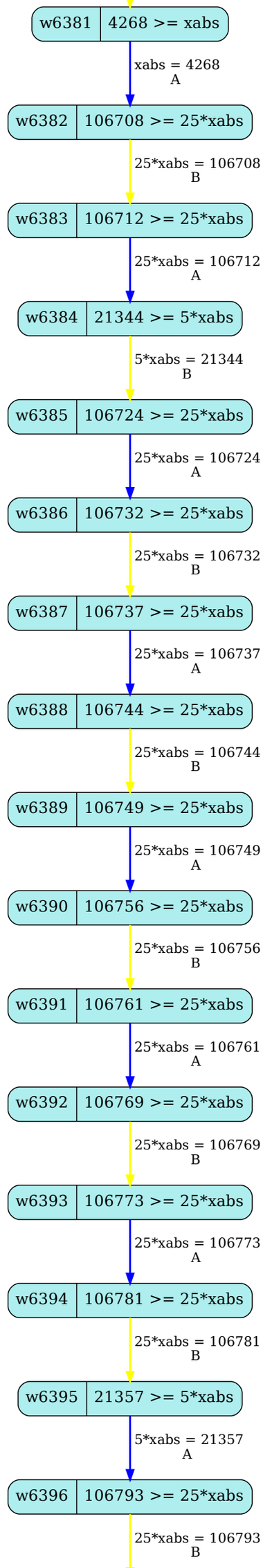
w6381
4268 >= xabs
xabs = 4268
A
w6382
106708 >= 25*xabs
25*xabs = 106708
B
w6383
106712 >= 25*xabs
25*xabs = 106712
A
w6384
21344 >= 5*xabs
5*xabs = 21344
B
w6385
106724 >= 25*xabs
25*xabs = 106724
A
w6386
106732 >= 25*xabs
25*xabs = 106732
B
w6387
106737 >= 25*xabs
25*xabs = 106737
A
w6388
106744 >= 25*xabs
25*xabs = 106744
B
w6389
106749 >= 25*xabs
25*xabs = 106749
A
w6390
106756 >= 25*xabs
25*xabs = 106756
B
w6391
106761 >= 25*xabs
25*xabs = 106761
A
w6392
106769 >= 25*xabs
25*xabs = 106769
B
w6393
106773 >= 25*xabs
25*xabs = 106773
A
w6394
106781 >= 25*xabs
25*xabs = 106781
B
w6395
21357 >= 5*xabs
5*xabs = 21357
A
w6396
106793 >= 25*xabs
25*xabs = 106793
B

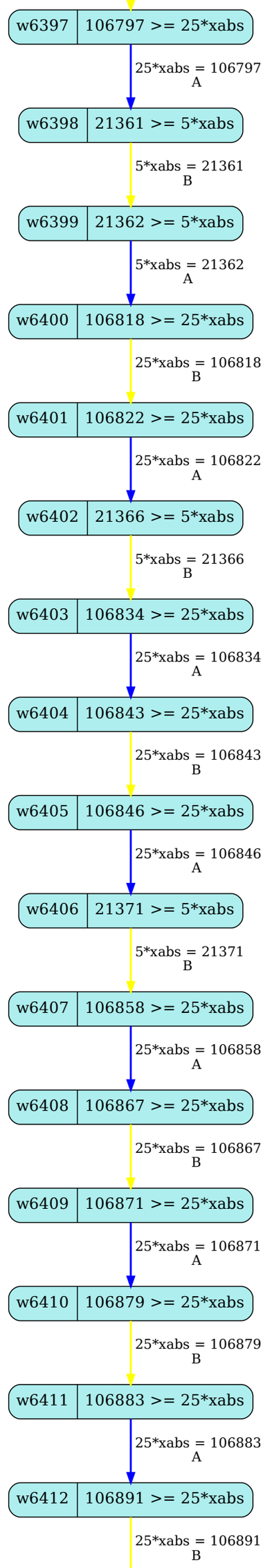
w6397
106797 >= 25*xabs
25*xabs = 106797
A
w6398
21361 >= 5*xabs
5*xabs = 21361
B
w6399
21362 >= 5*xabs
5*xabs = 21362
A
w6400
106818 >= 25*xabs
25*xabs = 106818
B
w6401
106822 >= 25*xabs
25*xabs = 106822
A
w6402
21366 >= 5*xabs
5*xabs = 21366
B
w6403
106834 >= 25*xabs
25*xabs = 106834
A
w6404
106843 >= 25*xabs
25*xabs = 106843
B
w6405
106846 >= 25*xabs
25*xabs = 106846
A
w6406
21371 >= 5*xabs
5*xabs = 21371
B
w6407
106858 >= 25*xabs
25*xabs = 106858
A
w6408
106867 >= 25*xabs
25*xabs = 106867
B
w6409
106871 >= 25*xabs
25*xabs = 106871
A
w6410
106879 >= 25*xabs
25*xabs = 106879
B
w6411
106883 >= 25*xabs
25*xabs = 106883
A
w6412
106891 >= 25*xabs
25*xabs = 106891
B

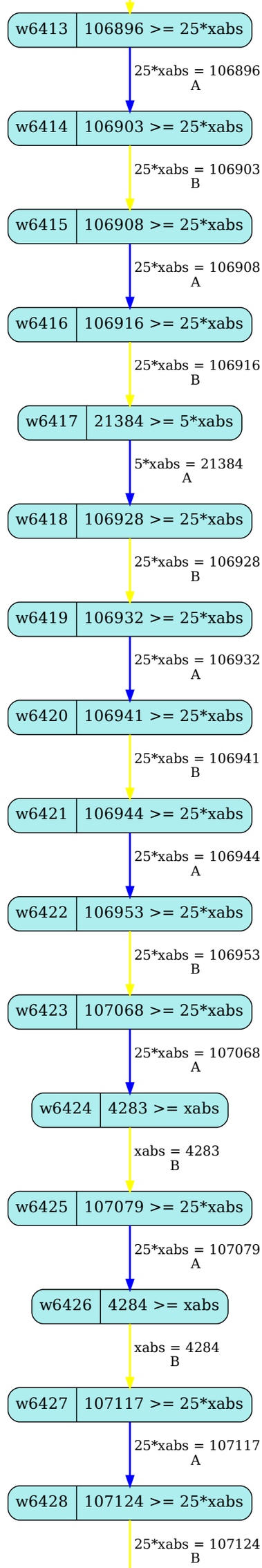
w6413
106896 >= 25*xabs
25*xabs = 106896
A
w6414
106903 >= 25*xabs
25*xabs = 106903
B
w6415
106908 >= 25*xabs
25*xabs = 106908
A
w6416
106916 >= 25*xabs
25*xabs = 106916
B
w6417
21384 >= 5*xabs
5*xabs = 21384
A
w6418
106928 >= 25*xabs
25*xabs = 106928
B
w6419
106932 >= 25*xabs
25*xabs = 106932
A
w6420
106941 >= 25*xabs
25*xabs = 106941
B
w6421
106944 >= 25*xabs
25*xabs = 106944
A
w6422
106953 >= 25*xabs
25*xabs = 106953
B
w6423
107068 >= 25*xabs
25*xabs = 107068
A
w6424
4283 >= xabs
xabs = 4283
B
w6425
107079 >= 25*xabs
25*xabs = 107079
A
w6426
4284 >= xabs
xabs = 4284
B
w6427
107117 >= 25*xabs
25*xabs = 107117
A
w6428
107124 >= 25*xabs
25*xabs = 107124
B

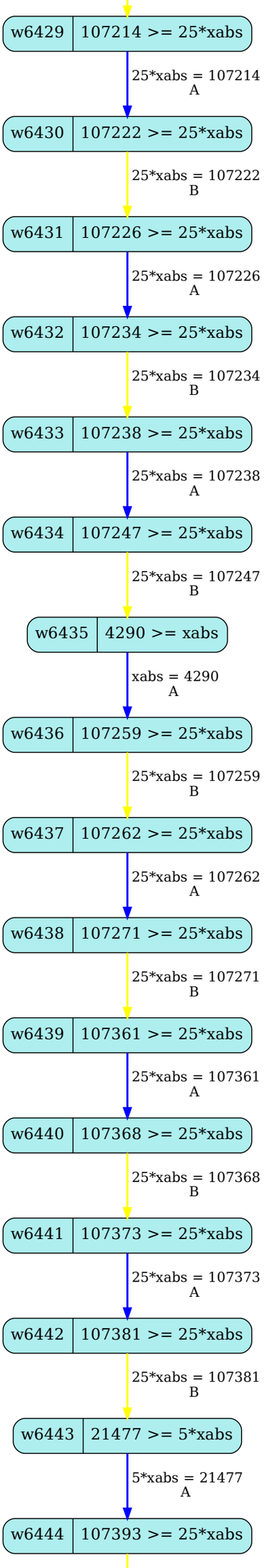
w6429
107214 >= 25*xabs
25*xabs = 107214
A
w6430
107222 >= 25*xabs
25*xabs = 107222
B
w6431
107226 >= 25*xabs
25*xabs = 107226
A
w6432
107234 >= 25*xabs
25*xabs = 107234
B
w6433
107238 >= 25*xabs
25*xabs = 107238
A
w6434
107247 >= 25*xabs
25*xabs = 107247
B
w6435
4290 >= xabs
xabs = 4290
A
w6436
107259 >= 25*xabs
25*xabs = 107259
B
w6437
107262 >= 25*xabs
25*xabs = 107262
A
w6438
107271 >= 25*xabs
25*xabs = 107271
B
w6439
107361 >= 25*xabs
25*xabs = 107361
A
w6440
107368 >= 25*xabs
25*xabs = 107368
B
w6441
107373 >= 25*xabs
25*xabs = 107373
A
w6442
107381 >= 25*xabs
25*xabs = 107381
B
w6443
21477 >= 5*xabs
5*xabs = 21477
A
w6444
107393 >= 25*xabs

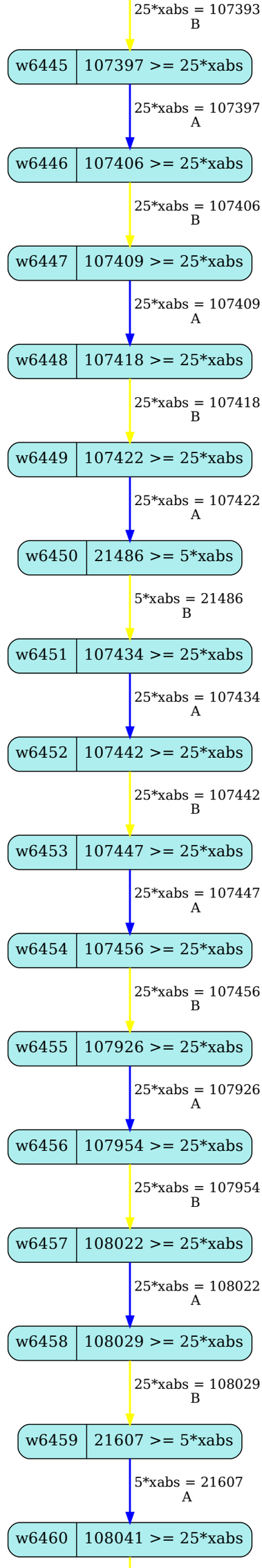
25*xabs = 107393
B
w6445
107397 >= 25*xabs
25*xabs = 107397
A
w6446
107406 >= 25*xabs
25*xabs = 107406
B
w6447
107409 >= 25*xabs
25*xabs = 107409
A
w6448
107418 >= 25*xabs
25*xabs = 107418
B
w6449
107422 >= 25*xabs
25*xabs = 107422
A
w6450
21486 >= 5*xabs
5*xabs = 21486
B
w6451
107434 >= 25*xabs
25*xabs = 107434
A
w6452
107442 >= 25*xabs
25*xabs = 107442
B
w6453
107447 >= 25*xabs
25*xabs = 107447
A
w6454
107456 >= 25*xabs
25*xabs = 107456
B
w6455
107926 >= 25*xabs
25*xabs = 107926
A
w6456
107954 >= 25*xabs
25*xabs = 107954
B
w6457
108022 >= 25*xabs
25*xabs = 108022
A
w6458
108029 >= 25*xabs
25*xabs = 108029
B
w6459
21607 >= 5*xabs
5*xabs = 21607
A
w6460
108041 >= 25*xabs

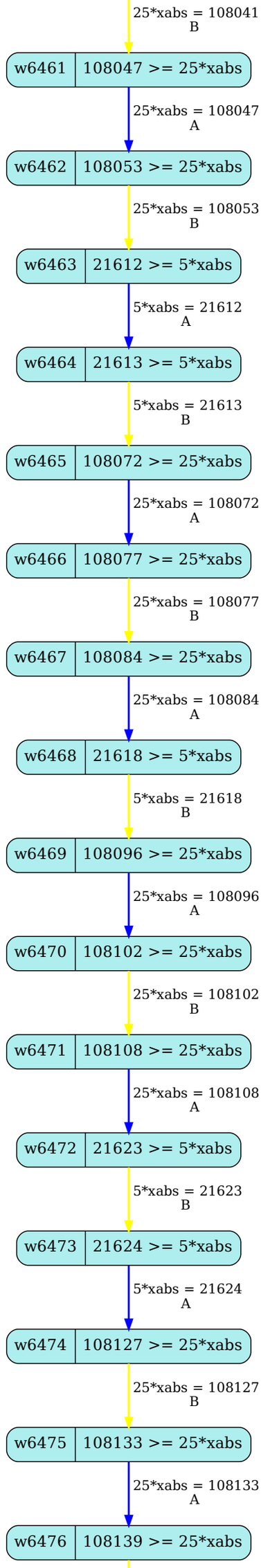
25*xabs = 108041
B
w6461
108047 >= 25*xabs
25*xabs = 108047
A
w6462
108053 >= 25*xabs
25*xabs = 108053
B
w6463
21612 >= 5*xabs
5*xabs = 21612
A
w6464
21613 >= 5*xabs
5*xabs = 21613
B
w6465
108072 >= 25*xabs
25*xabs = 108072
A
w6466
108077 >= 25*xabs
25*xabs = 108077
B
w6467
108084 >= 25*xabs
25*xabs = 108084
A
w6468
21618 >= 5*xabs
5*xabs = 21618
B
w6469
108096 >= 25*xabs
25*xabs = 108096
A
w6470
108102 >= 25*xabs
25*xabs = 108102
B
w6471
108108 >= 25*xabs
25*xabs = 108108
A
w6472
21623 >= 5*xabs
5*xabs = 21623
B
w6473
21624 >= 5*xabs
5*xabs = 21624
A
w6474
108127 >= 25*xabs
25*xabs = 108127
B
w6475
108133 >= 25*xabs
25*xabs = 108133
A
w6476
108139 >= 25*xabs

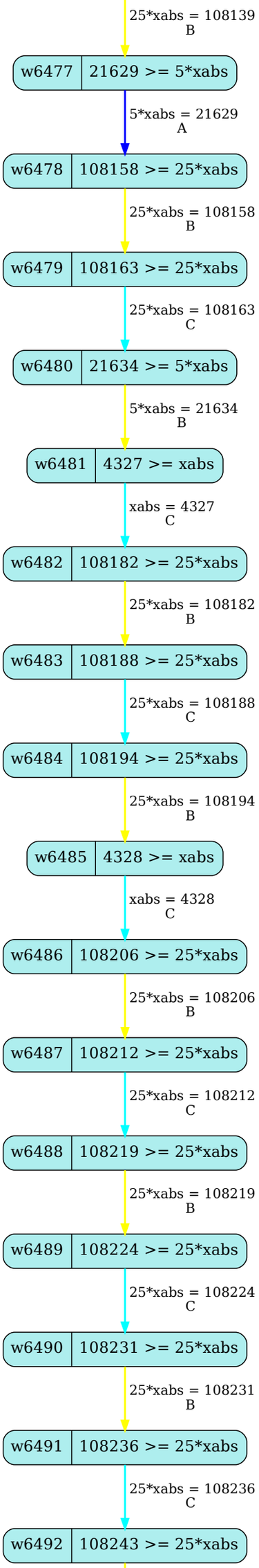
25*xabs = 108139
B
w6477
21629 >= 5*xabs
5*xabs = 21629
A
w6478
108158 >= 25*xabs
25*xabs = 108158
B
w6479
108163 >= 25*xabs
25*xabs = 108163
C
w6480
21634 >= 5*xabs
5*xabs = 21634
B
w6481
4327 >= xabs
xabs = 4327
C
w6482
108182 >= 25*xabs
25*xabs = 108182
B
w6483
108188 >= 25*xabs
25*xabs = 108188
C
w6484
108194 >= 25*xabs
25*xabs = 108194
B
w6485
4328 >= xabs
xabs = 4328
C
w6486
108206 >= 25*xabs
25*xabs = 108206
B
w6487
108212 >= 25*xabs
25*xabs = 108212
C
w6488
108219 >= 25*xabs
25*xabs = 108219
B
w6489
108224 >= 25*xabs
25*xabs = 108224
C
w6490
108231 >= 25*xabs
25*xabs = 108231
B
w6491
108236 >= 25*xabs
25*xabs = 108236
C
w6492
108243 >= 25*xabs

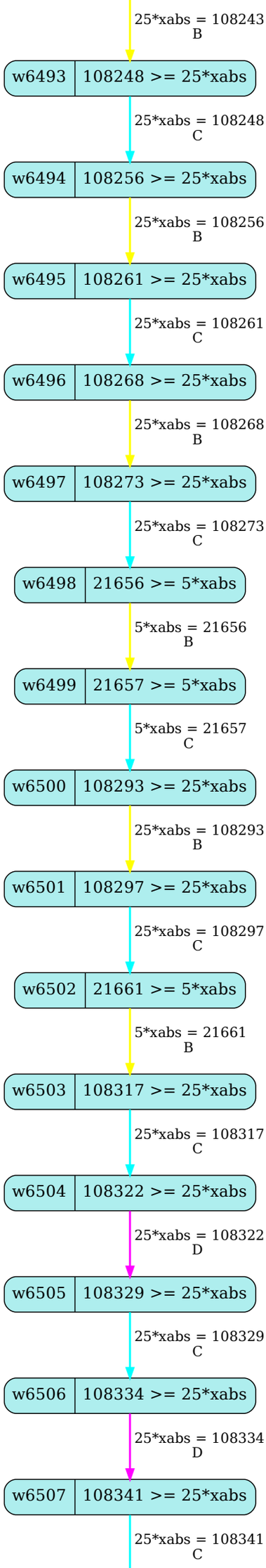
25*xabs = 108243
B
w6493
108248 >= 25*xabs
25*xabs = 108248
C
w6494
108256 >= 25*xabs
25*xabs = 108256
B
w6495
108261 >= 25*xabs
25*xabs = 108261
C
w6496
108268 >= 25*xabs
25*xabs = 108268
B
w6497
108273 >= 25*xabs
25*xabs = 108273
C
w6498
21656 >= 5*xabs
5*xabs = 21656
B
w6499
21657 >= 5*xabs
5*xabs = 21657
C
w6500
108293 >= 25*xabs
25*xabs = 108293
B
w6501
108297 >= 25*xabs
25*xabs = 108297
C
w6502
21661 >= 5*xabs
5*xabs = 21661
B
w6503
108317 >= 25*xabs
25*xabs = 108317
C
w6504
108322 >= 25*xabs
25*xabs = 108322
D
w6505
108329 >= 25*xabs
25*xabs = 108329
C
w6506
108334 >= 25*xabs
25*xabs = 108334
D
w6507
108341 >= 25*xabs
25*xabs = 108341
C

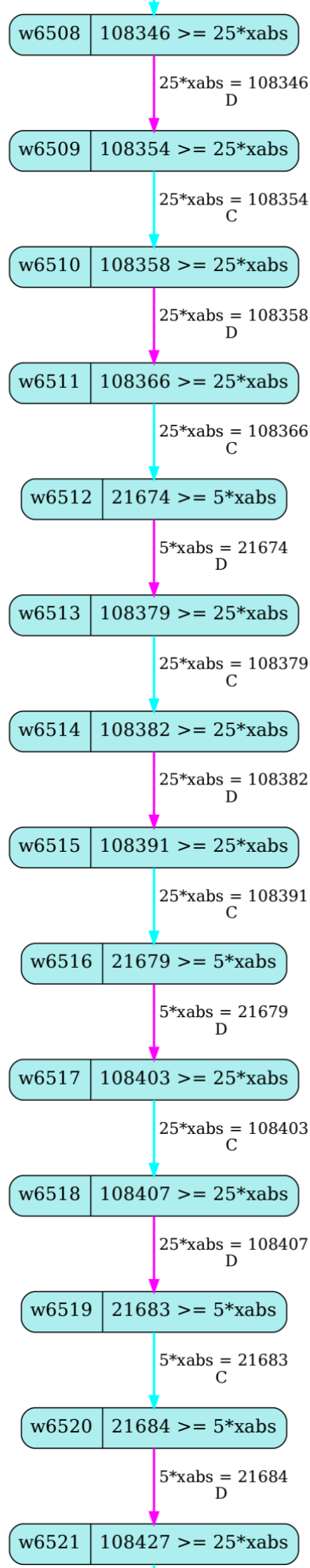
w6508
108346 >= 25*xabs
25*xabs = 108346
D
w6509
108354 >= 25*xabs
25*xabs = 108354
C
w6510
108358 >= 25*xabs
25*xabs = 108358
D
w6511
108366 >= 25*xabs
25*xabs = 108366
C
w6512
21674 >= 5*xabs
5*xabs = 21674
D
w6513
108379 >= 25*xabs
25*xabs = 108379
C
w6514
108382 >= 25*xabs
25*xabs = 108382
D
w6515
108391 >= 25*xabs
25*xabs = 108391
C
w6516
21679 >= 5*xabs
5*xabs = 21679
D
w6517
108403 >= 25*xabs
25*xabs = 108403
C
w6518
108407 >= 25*xabs
25*xabs = 108407
D
w6519
21683 >= 5*xabs
5*xabs = 21683
C
w6520
21684 >= 5*xabs
5*xabs = 21684
D
w6521
108427 >= 25*xabs

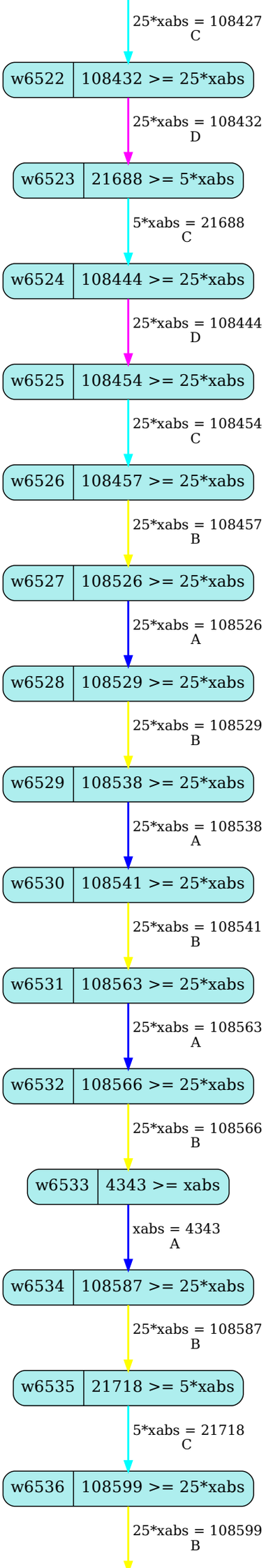
25*xabs = 108427
C
w6522
108432 >= 25*xabs
25*xabs = 108432
D
w6523
21688 >= 5*xabs
5*xabs = 21688
C
w6524
108444 >= 25*xabs
25*xabs = 108444
D
w6525
108454 >= 25*xabs
25*xabs = 108454
C
w6526
108457 >= 25*xabs
25*xabs = 108457
B
w6527
108526 >= 25*xabs
25*xabs = 108526
A
w6528
108529 >= 25*xabs
25*xabs = 108529
B
w6529
108538 >= 25*xabs
25*xabs = 108538
A
w6530
108541 >= 25*xabs
25*xabs = 108541
B
w6531
108563 >= 25*xabs
25*xabs = 108563
A
w6532
108566 >= 25*xabs
25*xabs = 108566
B
w6533
4343 >= xabs
xabs = 4343
A
w6534
108587 >= 25*xabs
25*xabs = 108587
B
w6535
21718 >= 5*xabs
5*xabs = 21718
C
w6536
108599 >= 25*xabs
25*xabs = 108599
B

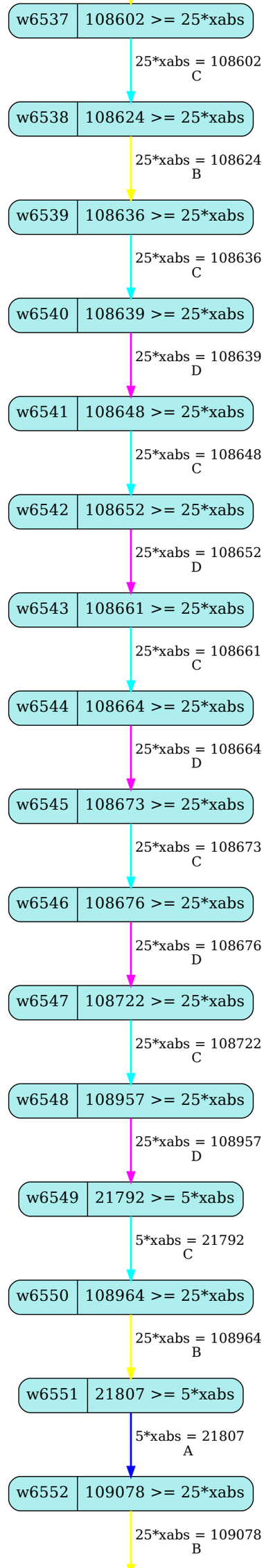
w6537
108602 >= 25*xabs
25*xabs = 108602
C
w6538
108624 >= 25*xabs
25*xabs = 108624
B
w6539
108636 >= 25*xabs
25*xabs = 108636
C
w6540
108639 >= 25*xabs
25*xabs = 108639
D
w6541
108648 >= 25*xabs
25*xabs = 108648
C
w6542
108652 >= 25*xabs
25*xabs = 108652
D
w6543
108661 >= 25*xabs
25*xabs = 108661
C
w6544
108664 >= 25*xabs
25*xabs = 108664
D
w6545
108673 >= 25*xabs
25*xabs = 108673
C
w6546
108676 >= 25*xabs
25*xabs = 108676
D
w6547
108722 >= 25*xabs
25*xabs = 108722
C
w6548
108957 >= 25*xabs
25*xabs = 108957
D
w6549
21792 >= 5*xabs
5*xabs = 21792
C
w6550
108964 >= 25*xabs
25*xabs = 108964
B
w6551
21807 >= 5*xabs
5*xabs = 21807
A
w6552
109078 >= 25*xabs
25*xabs = 109078
B

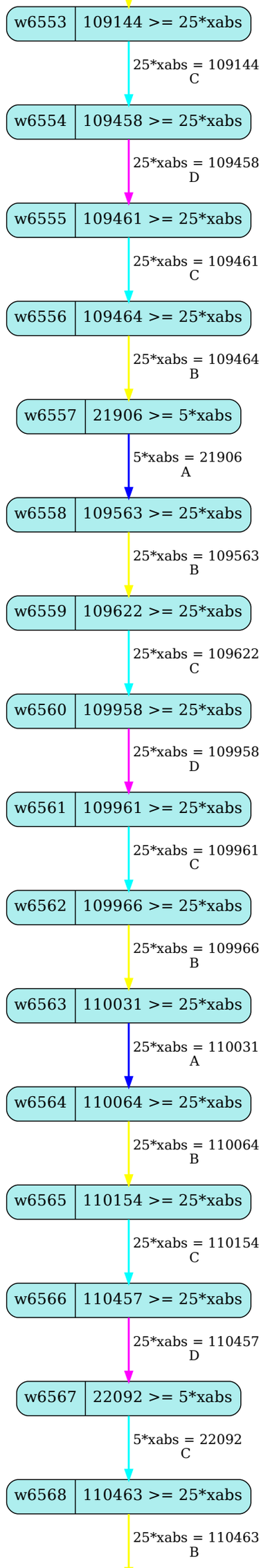
w6553
109144 >= 25*xabs
25*xabs = 109144
C
w6554
109458 >= 25*xabs
25*xabs = 109458
D
w6555
109461 >= 25*xabs
25*xabs = 109461
C
w6556
109464 >= 25*xabs
25*xabs = 109464
B
w6557
21906 >= 5*xabs
5*xabs = 21906
A
w6558
109563 >= 25*xabs
25*xabs = 109563
B
w6559
109622 >= 25*xabs
25*xabs = 109622
C
w6560
109958 >= 25*xabs
25*xabs = 109958
D
w6561
109961 >= 25*xabs
25*xabs = 109961
C
w6562
109966 >= 25*xabs
25*xabs = 109966
B
w6563
110031 >= 25*xabs
25*xabs = 110031
A
w6564
110064 >= 25*xabs
25*xabs = 110064
B
w6565
110154 >= 25*xabs
25*xabs = 110154
C
w6566
110457 >= 25*xabs
25*xabs = 110457
D
w6567
22092 >= 5*xabs
5*xabs = 22092
C
w6568
110463 >= 25*xabs
25*xabs = 110463
B

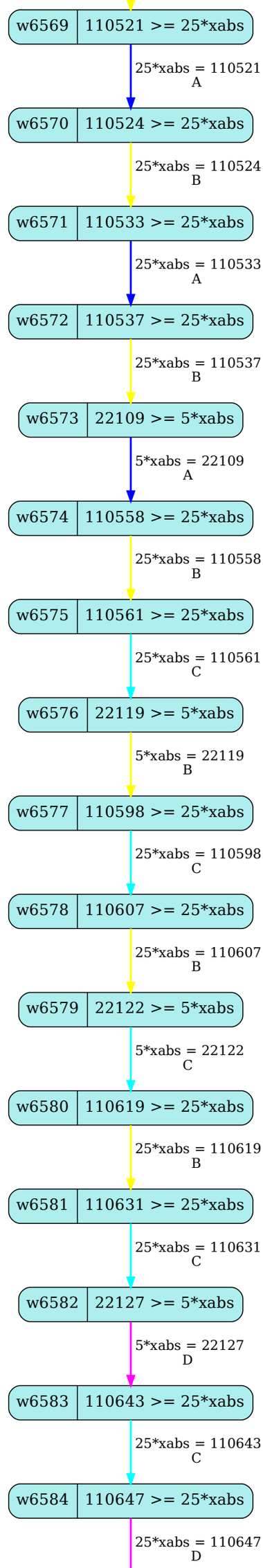
w6569
110521 >= 25*xabs
25*xabs = 110521
A
w6570
110524 >= 25*xabs
25*xabs = 110524
B
w6571
110533 >= 25*xabs
25*xabs = 110533
A
w6572
110537 >= 25*xabs
25*xabs = 110537
B
w6573
22109 >= 5*xabs
5*xabs = 22109
A
w6574
110558 >= 25*xabs
25*xabs = 110558
B
w6575
110561 >= 25*xabs
25*xabs = 110561
C
w6576
22119 >= 5*xabs
5*xabs = 22119
B
w6577
110598 >= 25*xabs
25*xabs = 110598
C
w6578
110607 >= 25*xabs
25*xabs = 110607
B
w6579
22122 >= 5*xabs
5*xabs = 22122
C
w6580
110619 >= 25*xabs
25*xabs = 110619
B
w6581
110631 >= 25*xabs
25*xabs = 110631
C
w6582
22127 >= 5*xabs
5*xabs = 22127
D
w6583
110643 >= 25*xabs
25*xabs = 110643
C
w6584
110647 >= 25*xabs
25*xabs = 110647
D

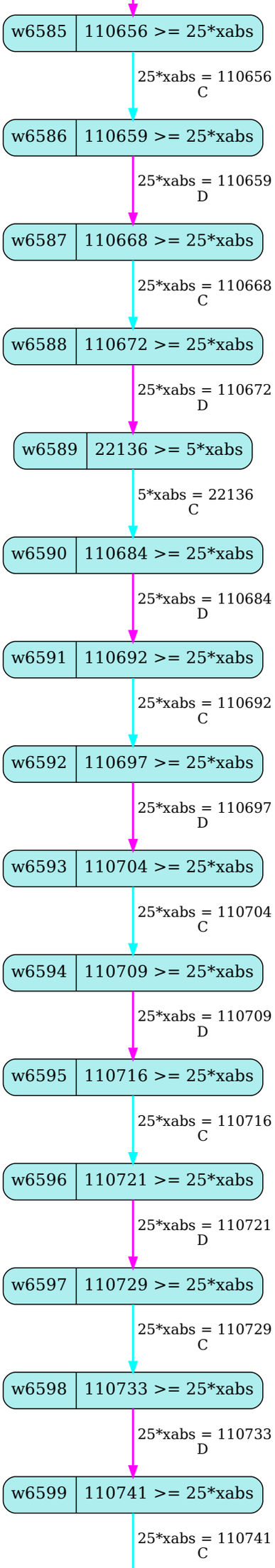
w6585
110656 >= 25*xabs
25*xabs = 110656
C
w6586
110659 >= 25*xabs
25*xabs = 110659
D
w6587
110668 >= 25*xabs
25*xabs = 110668
C
w6588
110672 >= 25*xabs
25*xabs = 110672
D
w6589
22136 >= 5*xabs
5*xabs = 22136
C
w6590
110684 >= 25*xabs
25*xabs = 110684
D
w6591
110692 >= 25*xabs
25*xabs = 110692
C
w6592
110697 >= 25*xabs
25*xabs = 110697
D
w6593
110704 >= 25*xabs
25*xabs = 110704
C
w6594
110709 >= 25*xabs
25*xabs = 110709
D
w6595
110716 >= 25*xabs
25*xabs = 110716
C
w6596
110721 >= 25*xabs
25*xabs = 110721
D
w6597
110729 >= 25*xabs
25*xabs = 110729
C
w6598
110733 >= 25*xabs
25*xabs = 110733
D
w6599
110741 >= 25*xabs
25*xabs = 110741
C

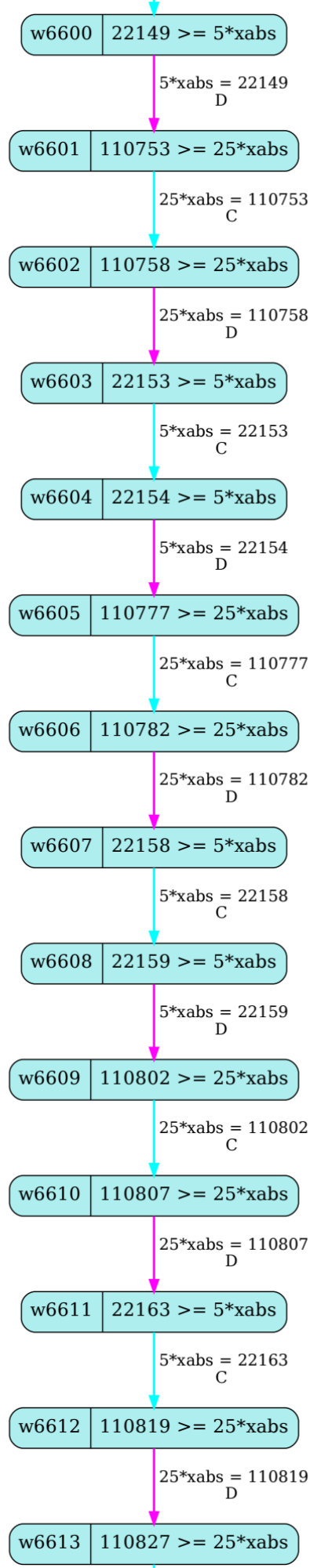
w6600
22149 >= 5*xabs
5*xabs = 22149
D
w6601
110753 >= 25*xabs
25*xabs = 110753
C
w6602
110758 >= 25*xabs
25*xabs = 110758
D
w6603
22153 >= 5*xabs
5*xabs = 22153
C
w6604
22154 >= 5*xabs
5*xabs = 22154
D
w6605
110777 >= 25*xabs
25*xabs = 110777
C
w6606
110782 >= 25*xabs
25*xabs = 110782
D
w6607
22158 >= 5*xabs
5*xabs = 22158
C
w6608
22159 >= 5*xabs
5*xabs = 22159
D
w6609
110802 >= 25*xabs
25*xabs = 110802
C
w6610
110807 >= 25*xabs
25*xabs = 110807
D
w6611
22163 >= 5*xabs
5*xabs = 22163
C
w6612
110819 >= 25*xabs
25*xabs = 110819
D
w6613
110827 >= 25*xabs

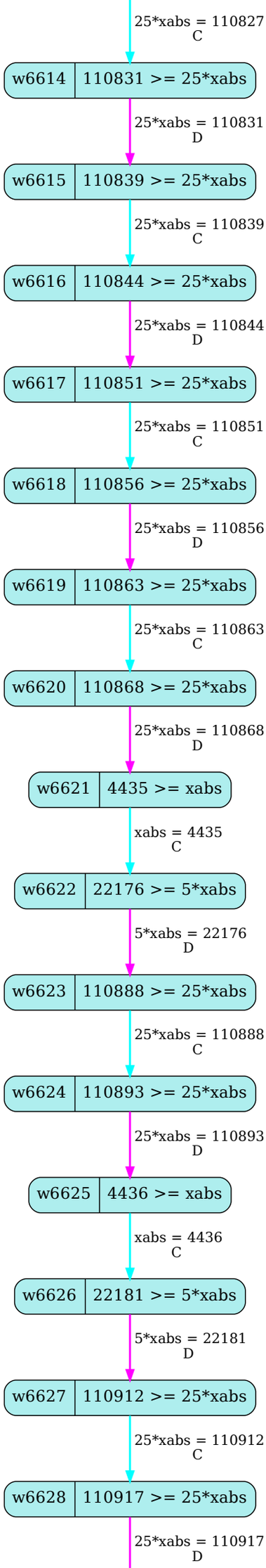
25*xabs = 110827
C
w6614
110831 >= 25*xabs
25*xabs = 110831
D
w6615
110839 >= 25*xabs
25*xabs = 110839
C
w6616
110844 >= 25*xabs
25*xabs = 110844
D
w6617
110851 >= 25*xabs
25*xabs = 110851
C
w6618
110856 >= 25*xabs
25*xabs = 110856
D
w6619
110863 >= 25*xabs
25*xabs = 110863
C
w6620
110868 >= 25*xabs
25*xabs = 110868
D
w6621
4435 >= xabs
xabs = 4435
C
w6622
22176 >= 5*xabs
5*xabs = 22176
D
w6623
110888 >= 25*xabs
25*xabs = 110888
C
w6624
110893 >= 25*xabs
25*xabs = 110893
D
w6625
4436 >= xabs
xabs = 4436
C
w6626
22181 >= 5*xabs
5*xabs = 22181
D
w6627
110912 >= 25*xabs
25*xabs = 110912
C
w6628
110917 >= 25*xabs
25*xabs = 110917
D

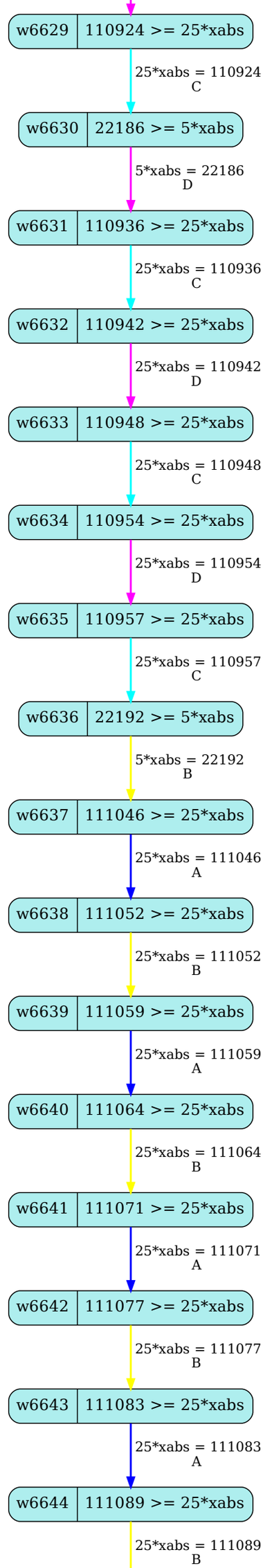
w6629
110924 >= 25*xabs
25*xabs = 110924
C
w6630
22186 >= 5*xabs
5*xabs = 22186
D
w6631
110936 >= 25*xabs
25*xabs = 110936
C
w6632
110942 >= 25*xabs
25*xabs = 110942
D
w6633
110948 >= 25*xabs
25*xabs = 110948
C
w6634
110954 >= 25*xabs
25*xabs = 110954
D
w6635
110957 >= 25*xabs
25*xabs = 110957
C
w6636
22192 >= 5*xabs
5*xabs = 22192
B
w6637
111046 >= 25*xabs
25*xabs = 111046
A
w6638
111052 >= 25*xabs
25*xabs = 111052
B
w6639
111059 >= 25*xabs
25*xabs = 111059
A
w6640
111064 >= 25*xabs
25*xabs = 111064
B
w6641
111071 >= 25*xabs
25*xabs = 111071
A
w6642
111077 >= 25*xabs
25*xabs = 111077
B
w6643
111083 >= 25*xabs
25*xabs = 111083
A
w6644
111089 >= 25*xabs
25*xabs = 111089
B

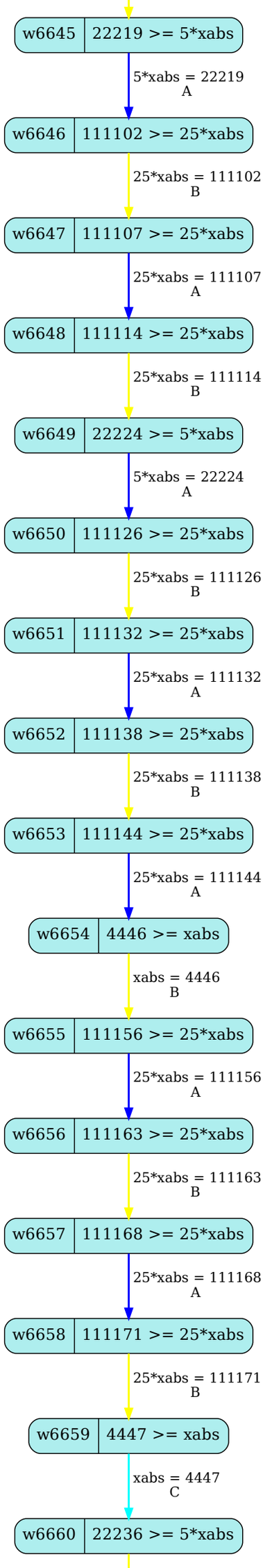
w6645
22219 >= 5*xabs
5*xabs = 22219
A
w6646
111102 >= 25*xabs
25*xabs = 111102
B
w6647
111107 >= 25*xabs
25*xabs = 111107
A
w6648
111114 >= 25*xabs
25*xabs = 111114
B
w6649
22224 >= 5*xabs
5*xabs = 22224
A
w6650
111126 >= 25*xabs
25*xabs = 111126
B
w6651
111132 >= 25*xabs
25*xabs = 111132
A
w6652
111138 >= 25*xabs
25*xabs = 111138
B
w6653
111144 >= 25*xabs
25*xabs = 111144
A
w6654
4446 >= xabs
xabs = 4446
B
w6655
111156 >= 25*xabs
25*xabs = 111156
A
w6656
111163 >= 25*xabs
25*xabs = 111163
B
w6657
111168 >= 25*xabs
25*xabs = 111168
A
w6658
111171 >= 25*xabs
25*xabs = 111171
B
w6659
4447 >= xabs
xabs = 4447
C
w6660
22236 >= 5*xabs

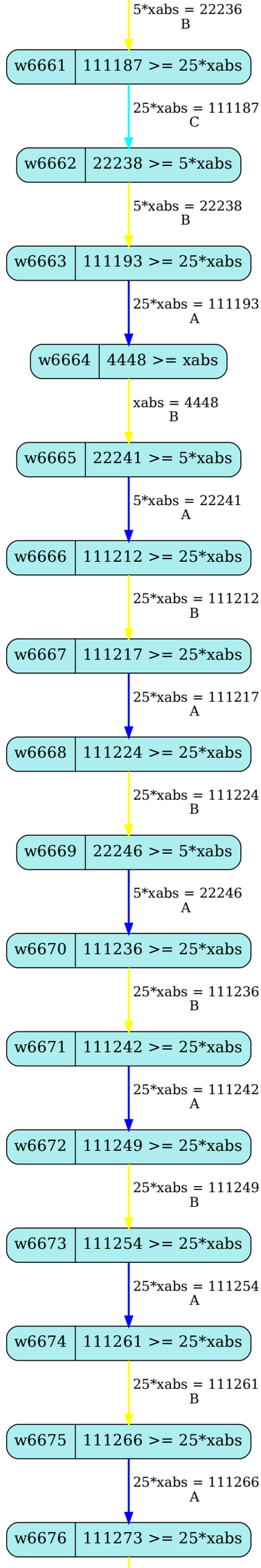
5*xabs = 22236
B
w6661
111187 >= 25*xabs
25*xabs = 111187
C
w6662
22238 >= 5*xabs
5*xabs = 22238
B
w6663
111193 >= 25*xabs
25*xabs = 111193
A
w6664
4448 >= xabs
xabs = 4448
B
w6665
22241 >= 5*xabs
5*xabs = 22241
A
w6666
111212 >= 25*xabs
25*xabs = 111212
B
w6667
111217 >= 25*xabs
25*xabs = 111217
A
w6668
111224 >= 25*xabs
25*xabs = 111224
B
w6669
22246 >= 5*xabs
5*xabs = 22246
A
w6670
111236 >= 25*xabs
25*xabs = 111236
B
w6671
111242 >= 25*xabs
25*xabs = 111242
A
w6672
111249 >= 25*xabs
25*xabs = 111249
B
w6673
111254 >= 25*xabs
25*xabs = 111254
A
w6674
111261 >= 25*xabs
25*xabs = 111261
B
w6675
111266 >= 25*xabs
25*xabs = 111266
A
w6676
111273 >= 25*xabs

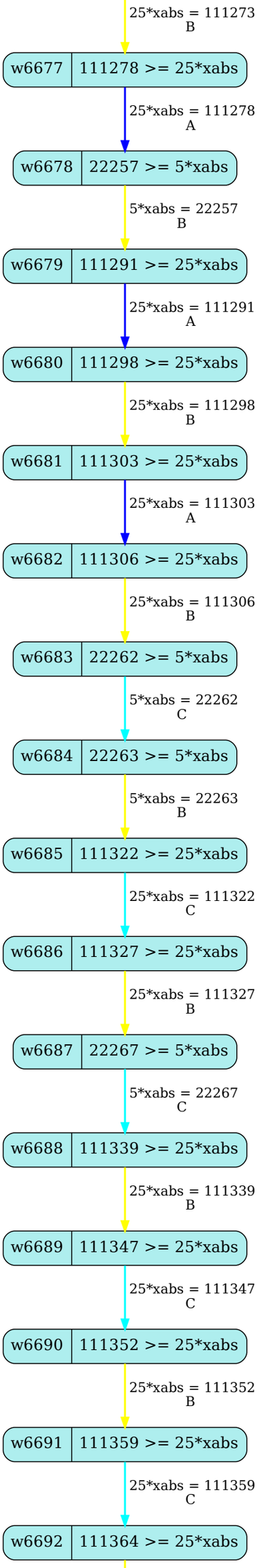
25*xabs = 111273
B
w6677
111278 >= 25*xabs
25*xabs = 111278
A
w6678
22257 >= 5*xabs
5*xabs = 22257
B
w6679
111291 >= 25*xabs
25*xabs = 111291
A
w6680
111298 >= 25*xabs
25*xabs = 111298
B
w6681
111303 >= 25*xabs
25*xabs = 111303
A
w6682
111306 >= 25*xabs
25*xabs = 111306
B
w6683
22262 >= 5*xabs
5*xabs = 22262
C
w6684
22263 >= 5*xabs
5*xabs = 22263
B
w6685
111322 >= 25*xabs
25*xabs = 111322
C
w6686
111327 >= 25*xabs
25*xabs = 111327
B
w6687
22267 >= 5*xabs
5*xabs = 22267
C
w6688
111339 >= 25*xabs
25*xabs = 111339
B
w6689
111347 >= 25*xabs
25*xabs = 111347
C
w6690
111352 >= 25*xabs
25*xabs = 111352
B
w6691
111359 >= 25*xabs
25*xabs = 111359
C
w6692
111364 >= 25*xabs

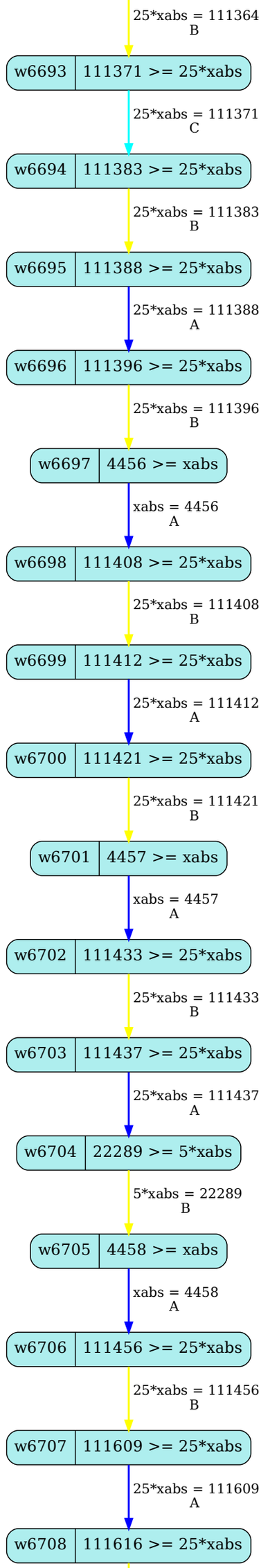
25*xabs = 111364
B
w6693
111371 >= 25*xabs
25*xabs = 111371
C
w6694
111383 >= 25*xabs
25*xabs = 111383
B
w6695
111388 >= 25*xabs
25*xabs = 111388
A
w6696
111396 >= 25*xabs
25*xabs = 111396
B
w6697
4456 >= xabs
xabs = 4456
A
w6698
111408 >= 25*xabs
25*xabs = 111408
B
w6699
111412 >= 25*xabs
25*xabs = 111412
A
w6700
111421 >= 25*xabs
25*xabs = 111421
B
w6701
4457 >= xabs
xabs = 4457
A
w6702
111433 >= 25*xabs
25*xabs = 111433
B
w6703
111437 >= 25*xabs
25*xabs = 111437
A
w6704
22289 >= 5*xabs
5*xabs = 22289
B
w6705
4458 >= xabs
xabs = 4458
A
w6706
111456 >= 25*xabs
25*xabs = 111456
B
w6707
111609 >= 25*xabs
25*xabs = 111609
A
w6708
111616 >= 25*xabs

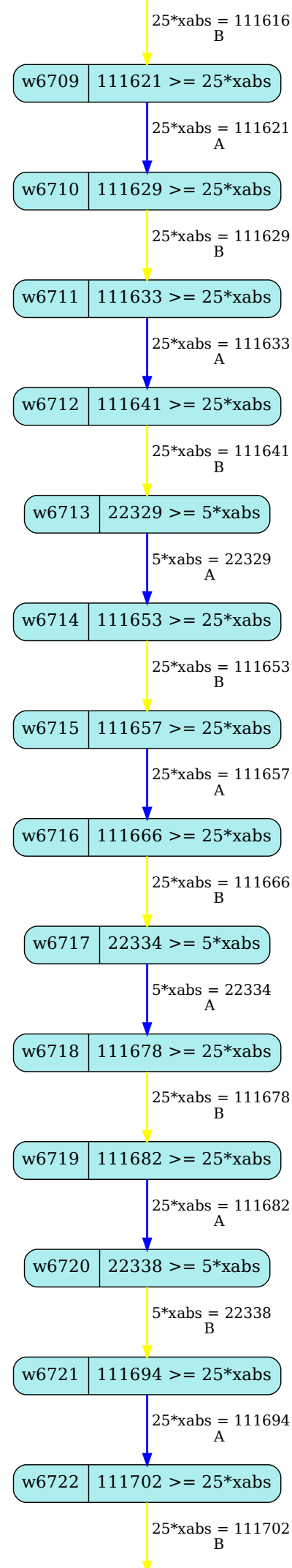
25*xabs = 111616
B
w6709
111621 >= 25*xabs
25*xabs = 111621
A
w6710
111629 >= 25*xabs
25*xabs = 111629
B
w6711
111633 >= 25*xabs
25*xabs = 111633
A
w6712
111641 >= 25*xabs
25*xabs = 111641
B
w6713
22329 >= 5*xabs
5*xabs = 22329
A
w6714
111653 >= 25*xabs
25*xabs = 111653
B
w6715
111657 >= 25*xabs
25*xabs = 111657
A
w6716
111666 >= 25*xabs
25*xabs = 111666
B
w6717
22334 >= 5*xabs
5*xabs = 22334
A
w6718
111678 >= 25*xabs
25*xabs = 111678
B
w6719
111682 >= 25*xabs
25*xabs = 111682
A
w6720
22338 >= 5*xabs
5*xabs = 22338
B
w6721
111694 >= 25*xabs
25*xabs = 111694
A
w6722
111702 >= 25*xabs
25*xabs = 111702
B

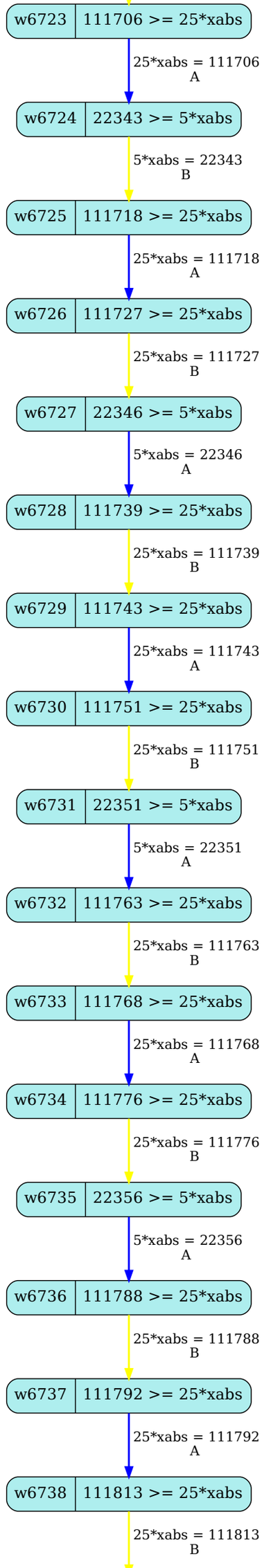
w6723
111706 >= 25*xabs
25*xabs = 111706
A
w6724
22343 >= 5*xabs
5*xabs = 22343
B
w6725
111718 >= 25*xabs
25*xabs = 111718
A
w6726
111727 >= 25*xabs
25*xabs = 111727
B
w6727
22346 >= 5*xabs
5*xabs = 22346
A
w6728
111739 >= 25*xabs
25*xabs = 111739
B
w6729
111743 >= 25*xabs
25*xabs = 111743
A
w6730
111751 >= 25*xabs
25*xabs = 111751
B
w6731
22351 >= 5*xabs
5*xabs = 22351
A
w6732
111763 >= 25*xabs
25*xabs = 111763
B
w6733
111768 >= 25*xabs
25*xabs = 111768
A
w6734
111776 >= 25*xabs
25*xabs = 111776
B
w6735
22356 >= 5*xabs
5*xabs = 22356
A
w6736
111788 >= 25*xabs
25*xabs = 111788
B
w6737
111792 >= 25*xabs
25*xabs = 111792
A
w6738
111813 >= 25*xabs
25*xabs = 111813
B

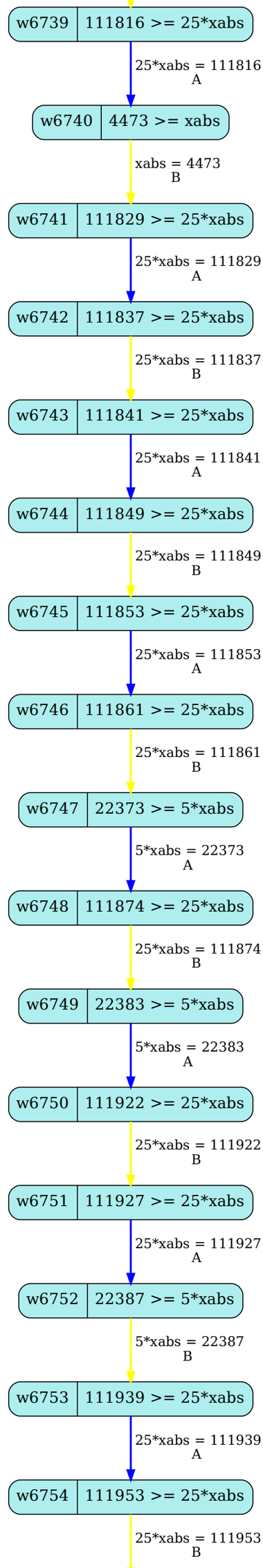
w6739
111816 >= 25*xabs
25*xabs = 111816
A
w6740
4473 >= xabs
xabs = 4473
B
w6741
111829 >= 25*xabs
25*xabs = 111829
A
w6742
111837 >= 25*xabs
25*xabs = 111837
B
w6743
111841 >= 25*xabs
25*xabs = 111841
A
w6744
111849 >= 25*xabs
25*xabs = 111849
B
w6745
111853 >= 25*xabs
25*xabs = 111853
A
w6746
111861 >= 25*xabs
25*xabs = 111861
B
w6747
22373 >= 5*xabs
5*xabs = 22373
A
w6748
111874 >= 25*xabs
25*xabs = 111874
B
w6749
22383 >= 5*xabs
5*xabs = 22383
A
w6750
111922 >= 25*xabs
25*xabs = 111922
B
w6751
111927 >= 25*xabs
25*xabs = 111927
A
w6752
22387 >= 5*xabs
5*xabs = 22387
B
w6753
111939 >= 25*xabs
25*xabs = 111939
A
w6754
111953 >= 25*xabs
25*xabs = 111953
B

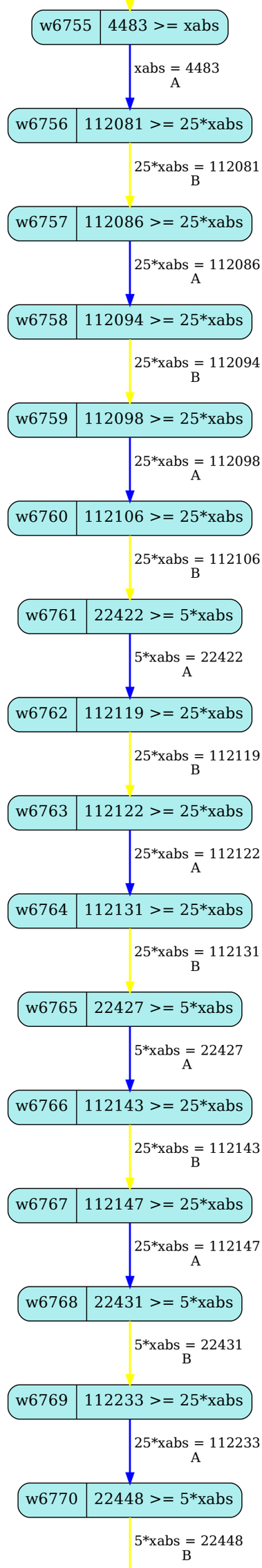
w6755
4483 >= xabs
xabs = 4483
A
w6756
112081 >= 25*xabs
25*xabs = 112081
B
w6757
112086 >= 25*xabs
25*xabs = 112086
A
w6758
112094 >= 25*xabs
25*xabs = 112094
B
w6759
112098 >= 25*xabs
25*xabs = 112098
A
w6760
112106 >= 25*xabs
25*xabs = 112106
B
w6761
22422 >= 5*xabs
5*xabs = 22422
A
w6762
112119 >= 25*xabs
25*xabs = 112119
B
w6763
112122 >= 25*xabs
25*xabs = 112122
A
w6764
112131 >= 25*xabs
25*xabs = 112131
B
w6765
22427 >= 5*xabs
5*xabs = 22427
A
w6766
112143 >= 25*xabs
25*xabs = 112143
B
w6767
112147 >= 25*xabs
25*xabs = 112147
A
w6768
22431 >= 5*xabs
5*xabs = 22431
B
w6769
112233 >= 25*xabs
25*xabs = 112233
A
w6770
22448 >= 5*xabs
5*xabs = 22448
B

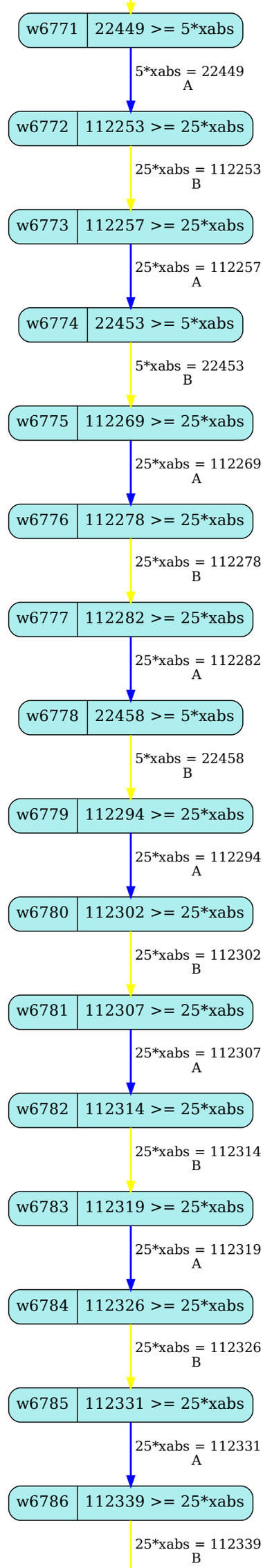
w6771
22449 >= 5*xabs
5*xabs = 22449
A
w6772
112253 >= 25*xabs
25*xabs = 112253
B
w6773
112257 >= 25*xabs
25*xabs = 112257
A
w6774
22453 >= 5*xabs
5*xabs = 22453
B
w6775
112269 >= 25*xabs
25*xabs = 112269
A
w6776
112278 >= 25*xabs
25*xabs = 112278
B
w6777
112282 >= 25*xabs
25*xabs = 112282
A
w6778
22458 >= 5*xabs
5*xabs = 22458
B
w6779
112294 >= 25*xabs
25*xabs = 112294
A
w6780
112302 >= 25*xabs
25*xabs = 112302
B
w6781
112307 >= 25*xabs
25*xabs = 112307
A
w6782
112314 >= 25*xabs
25*xabs = 112314
B
w6783
112319 >= 25*xabs
25*xabs = 112319
A
w6784
112326 >= 25*xabs
25*xabs = 112326
B
w6785
112331 >= 25*xabs
25*xabs = 112331
A
w6786
112339 >= 25*xabs
25*xabs = 112339
B

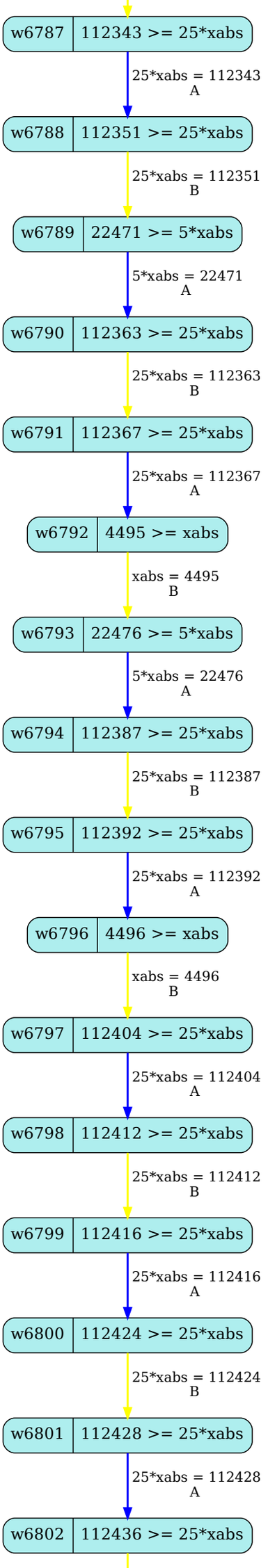
w6787
112343 >= 25*xabs
25*xabs = 112343
A
w6788
112351 >= 25*xabs
25*xabs = 112351
B
w6789
22471 >= 5*xabs
5*xabs = 22471
A
w6790
112363 >= 25*xabs
25*xabs = 112363
B
w6791
112367 >= 25*xabs
25*xabs = 112367
A
w6792
4495 >= xabs
xabs = 4495
B
w6793
22476 >= 5*xabs
5*xabs = 22476
A
w6794
112387 >= 25*xabs
25*xabs = 112387
B
w6795
112392 >= 25*xabs
25*xabs = 112392
A
w6796
4496 >= xabs
xabs = 4496
B
w6797
112404 >= 25*xabs
25*xabs = 112404
A
w6798
112412 >= 25*xabs
25*xabs = 112412
B
w6799
112416 >= 25*xabs
25*xabs = 112416
A
w6800
112424 >= 25*xabs
25*xabs = 112424
B
w6801
112428 >= 25*xabs
25*xabs = 112428
A
w6802
112436 >= 25*xabs

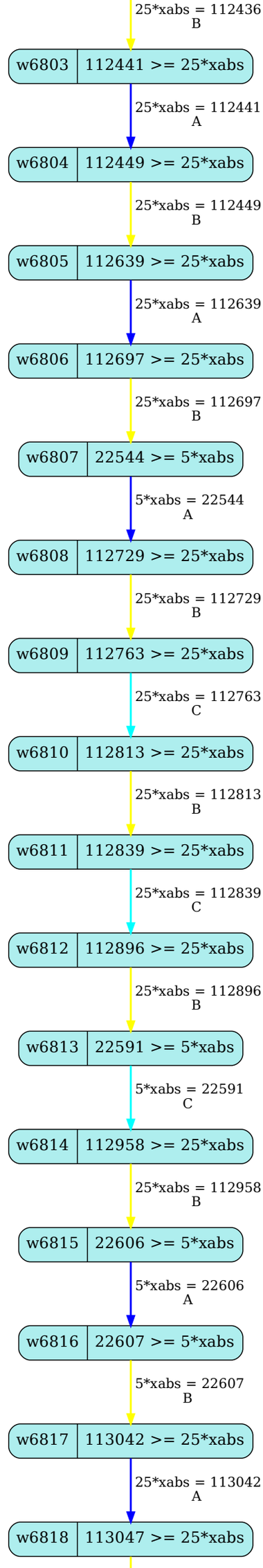
25*xabs = 112436
B
w6803
112441 >= 25*xabs
25*xabs = 112441
A
w6804
112449 >= 25*xabs
25*xabs = 112449
B
w6805
112639 >= 25*xabs
25*xabs = 112639
A
w6806
112697 >= 25*xabs
25*xabs = 112697
B
w6807
22544 >= 5*xabs
5*xabs = 22544
A
w6808
112729 >= 25*xabs
25*xabs = 112729
B
w6809
112763 >= 25*xabs
25*xabs = 112763
C
w6810
112813 >= 25*xabs
25*xabs = 112813
B
w6811
112839 >= 25*xabs
25*xabs = 112839
C
w6812
112896 >= 25*xabs
25*xabs = 112896
B
w6813
22591 >= 5*xabs
5*xabs = 22591
C
w6814
112958 >= 25*xabs
25*xabs = 112958
B
w6815
22606 >= 5*xabs
5*xabs = 22606
A
w6816
22607 >= 5*xabs
5*xabs = 22607
B
w6817
113042 >= 25*xabs
25*xabs = 113042
A
w6818
113047 >= 25*xabs

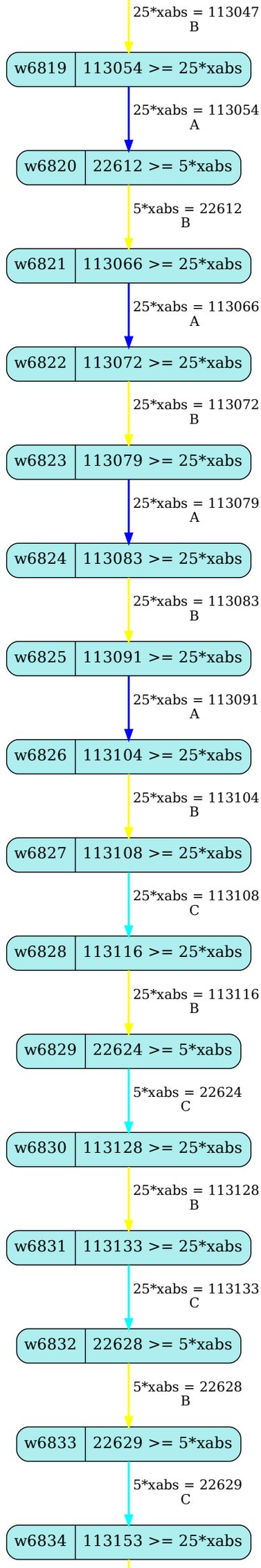
25*xabs = 113047
B
w6819
113054 >= 25*xabs
25*xabs = 113054
A
w6820
22612 >= 5*xabs
5*xabs = 22612
B
w6821
113066 >= 25*xabs
25*xabs = 113066
A
w6822
113072 >= 25*xabs
25*xabs = 113072
B
w6823
113079 >= 25*xabs
25*xabs = 113079
A
w6824
113083 >= 25*xabs
25*xabs = 113083
B
w6825
113091 >= 25*xabs
25*xabs = 113091
A
w6826
113104 >= 25*xabs
25*xabs = 113104
B
w6827
113108 >= 25*xabs
25*xabs = 113108
C
w6828
113116 >= 25*xabs
25*xabs = 113116
B
w6829
22624 >= 5*xabs
5*xabs = 22624
C
w6830
113128 >= 25*xabs
25*xabs = 113128
B
w6831
113133 >= 25*xabs
25*xabs = 113133
C
w6832
22628 >= 5*xabs
5*xabs = 22628
B
w6833
22629 >= 5*xabs
5*xabs = 22629
C
w6834
113153 >= 25*xabs

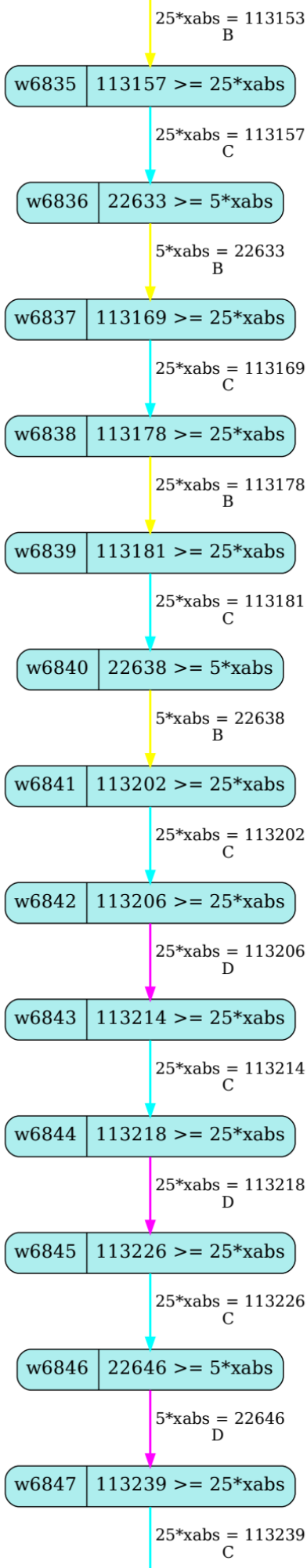
25*xabs = 113153
B
w6835
113157 >= 25*xabs
25*xabs = 113157
C
w6836
22633 >= 5*xabs
5*xabs = 22633
B
w6837
113169 >= 25*xabs
25*xabs = 113169
C
w6838
113178 >= 25*xabs
25*xabs = 113178
B
w6839
113181 >= 25*xabs
25*xabs = 113181
C
w6840
22638 >= 5*xabs
5*xabs = 22638
B
w6841
113202 >= 25*xabs
25*xabs = 113202
C
w6842
113206 >= 25*xabs
25*xabs = 113206
D
w6843
113214 >= 25*xabs
25*xabs = 113214
C
w6844
113218 >= 25*xabs
25*xabs = 113218
D
w6845
113226 >= 25*xabs
25*xabs = 113226
C
w6846
22646 >= 5*xabs
5*xabs = 22646
D
w6847
113239 >= 25*xabs
25*xabs = 113239
C

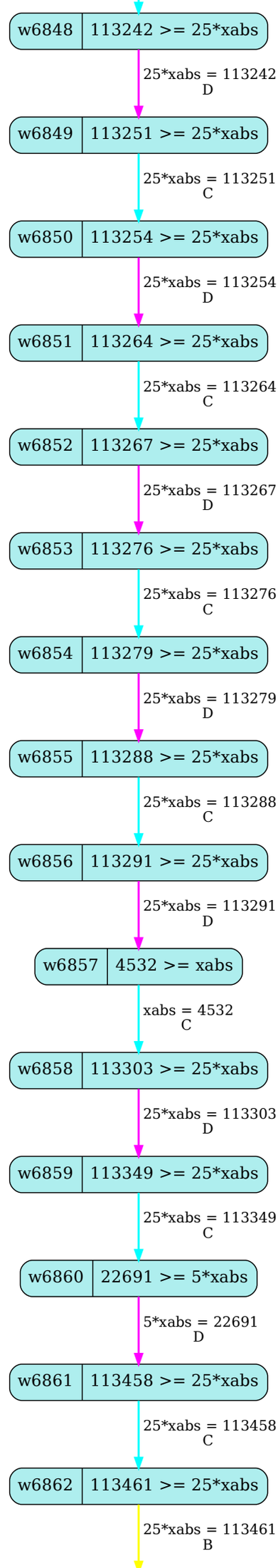
w6848
113242 >= 25*xabs
25*xabs = 113242
D
w6849
113251 >= 25*xabs
25*xabs = 113251
C
w6850
113254 >= 25*xabs
25*xabs = 113254
D
w6851
113264 >= 25*xabs
25*xabs = 113264
C
w6852
113267 >= 25*xabs
25*xabs = 113267
D
w6853
113276 >= 25*xabs
25*xabs = 113276
C
w6854
113279 >= 25*xabs
25*xabs = 113279
D
w6855
113288 >= 25*xabs
25*xabs = 113288
C
w6856
113291 >= 25*xabs
25*xabs = 113291
D
w6857
4532 >= xabs
xabs = 4532
C
w6858
113303 >= 25*xabs
25*xabs = 113303
D
w6859
113349 >= 25*xabs
25*xabs = 113349
C
w6860
22691 >= 5*xabs
5*xabs = 22691
D
w6861
113458 >= 25*xabs
25*xabs = 113458
C
w6862
113461 >= 25*xabs
25*xabs = 113461
B

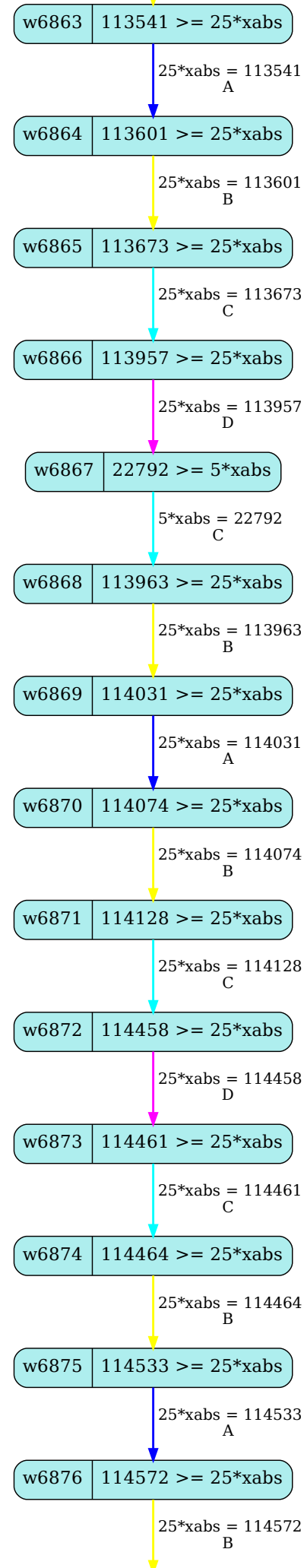
w6863
113541 >= 25*xabs
25*xabs = 113541
A
w6864
113601 >= 25*xabs
25*xabs = 113601
B
w6865
113673 >= 25*xabs
25*xabs = 113673
C
w6866
113957 >= 25*xabs
25*xabs = 113957
D
w6867
22792 >= 5*xabs
5*xabs = 22792
C
w6868
113963 >= 25*xabs
25*xabs = 113963
B
w6869
114031 >= 25*xabs
25*xabs = 114031
A
w6870
114074 >= 25*xabs
25*xabs = 114074
B
w6871
114128 >= 25*xabs
25*xabs = 114128
C
w6872
114458 >= 25*xabs
25*xabs = 114458
D
w6873
114461 >= 25*xabs
25*xabs = 114461
C
w6874
114464 >= 25*xabs
25*xabs = 114464
B
w6875
114533 >= 25*xabs
25*xabs = 114533
A
w6876
114572 >= 25*xabs
25*xabs = 114572
B

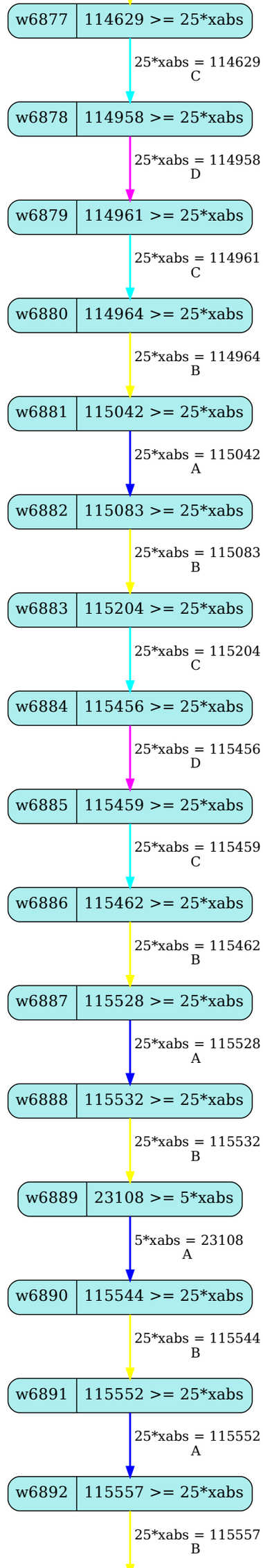
w6877
114629 >= 25*xabs
25*xabs = 114629
C
w6878
114958 >= 25*xabs
25*xabs = 114958
D
w6879
114961 >= 25*xabs
25*xabs = 114961
C
w6880
114964 >= 25*xabs
25*xabs = 114964
B
w6881
115042 >= 25*xabs
25*xabs = 115042
A
w6882
115083 >= 25*xabs
25*xabs = 115083
B
w6883
115204 >= 25*xabs
25*xabs = 115204
C
w6884
115456 >= 25*xabs
25*xabs = 115456
D
w6885
115459 >= 25*xabs
25*xabs = 115459
C
w6886
115462 >= 25*xabs
25*xabs = 115462
B
w6887
115528 >= 25*xabs
25*xabs = 115528
A
w6888
115532 >= 25*xabs
25*xabs = 115532
B
w6889
23108 >= 5*xabs
5*xabs = 23108
A
w6890
115544 >= 25*xabs
25*xabs = 115544
B
w6891
115552 >= 25*xabs
25*xabs = 115552
A
w6892
115557 >= 25*xabs
25*xabs = 115557
B

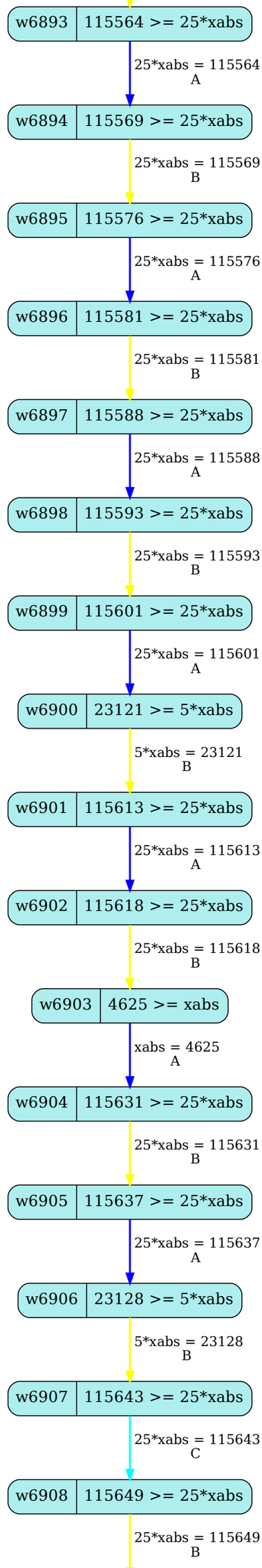
w6893
115564 >= 25*xabs
25*xabs = 115564
A
w6894
115569 >= 25*xabs
25*xabs = 115569
B
w6895
115576 >= 25*xabs
25*xabs = 115576
A
w6896
115581 >= 25*xabs
25*xabs = 115581
B
w6897
115588 >= 25*xabs
25*xabs = 115588
A
w6898
115593 >= 25*xabs
25*xabs = 115593
B
w6899
115601 >= 25*xabs
25*xabs = 115601
A
w6900
23121 >= 5*xabs
5*xabs = 23121
B
w6901
115613 >= 25*xabs
25*xabs = 115613
A
w6902
115618 >= 25*xabs
25*xabs = 115618
B
w6903
4625 >= xabs
xabs = 4625
A
w6904
115631 >= 25*xabs
25*xabs = 115631
B
w6905
115637 >= 25*xabs
25*xabs = 115637
A
w6906
23128 >= 5*xabs
5*xabs = 23128
B
w6907
115643 >= 25*xabs
25*xabs = 115643
C
w6908
115649 >= 25*xabs
25*xabs = 115649
B

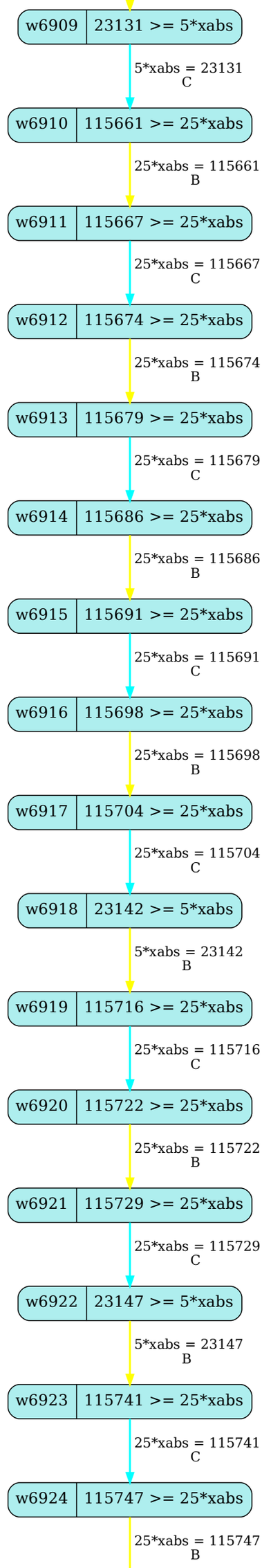
w6909
23131 >= 5*xabs
5*xabs = 23131
C
w6910
115661 >= 25*xabs
25*xabs = 115661
B
w6911
115667 >= 25*xabs
25*xabs = 115667
C
w6912
115674 >= 25*xabs
25*xabs = 115674
B
w6913
115679 >= 25*xabs
25*xabs = 115679
C
w6914
115686 >= 25*xabs
25*xabs = 115686
B
w6915
115691 >= 25*xabs
25*xabs = 115691
C
w6916
115698 >= 25*xabs
25*xabs = 115698
B
w6917
115704 >= 25*xabs
25*xabs = 115704
C
w6918
23142 >= 5*xabs
5*xabs = 23142
B
w6919
115716 >= 25*xabs
25*xabs = 115716
C
w6920
115722 >= 25*xabs
25*xabs = 115722
B
w6921
115729 >= 25*xabs
25*xabs = 115729
C
w6922
23147 >= 5*xabs
5*xabs = 23147
B
w6923
115741 >= 25*xabs
25*xabs = 115741
C
w6924
115747 >= 25*xabs
25*xabs = 115747
B

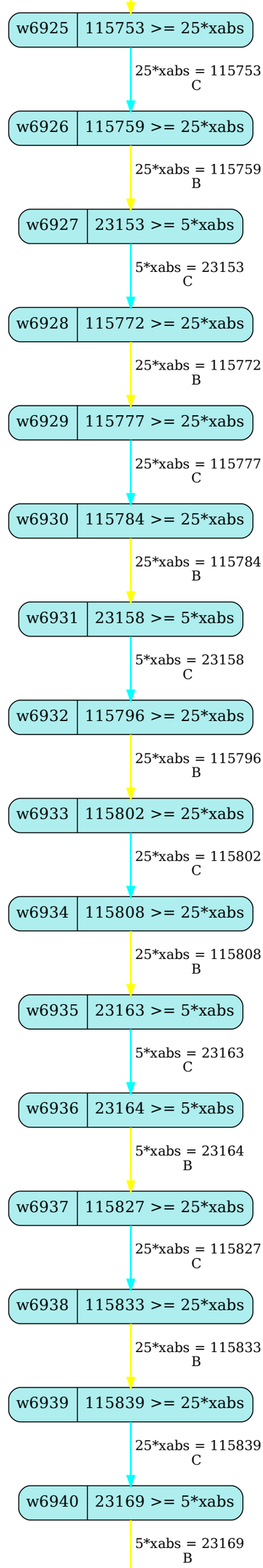
w6925
115753 >= 25*xabs
25*xabs = 115753
C
w6926
115759 >= 25*xabs
25*xabs = 115759
B
w6927
23153 >= 5*xabs
5*xabs = 23153
C
w6928
115772 >= 25*xabs
25*xabs = 115772
B
w6929
115777 >= 25*xabs
25*xabs = 115777
C
w6930
115784 >= 25*xabs
25*xabs = 115784
B
w6931
23158 >= 5*xabs
5*xabs = 23158
C
w6932
115796 >= 25*xabs
25*xabs = 115796
B
w6933
115802 >= 25*xabs
25*xabs = 115802
C
w6934
115808 >= 25*xabs
25*xabs = 115808
B
w6935
23163 >= 5*xabs
5*xabs = 23163
C
w6936
23164 >= 5*xabs
5*xabs = 23164
B
w6937
115827 >= 25*xabs
25*xabs = 115827
C
w6938
115833 >= 25*xabs
25*xabs = 115833
B
w6939
115839 >= 25*xabs
25*xabs = 115839
C
w6940
23169 >= 5*xabs
5*xabs = 23169
B

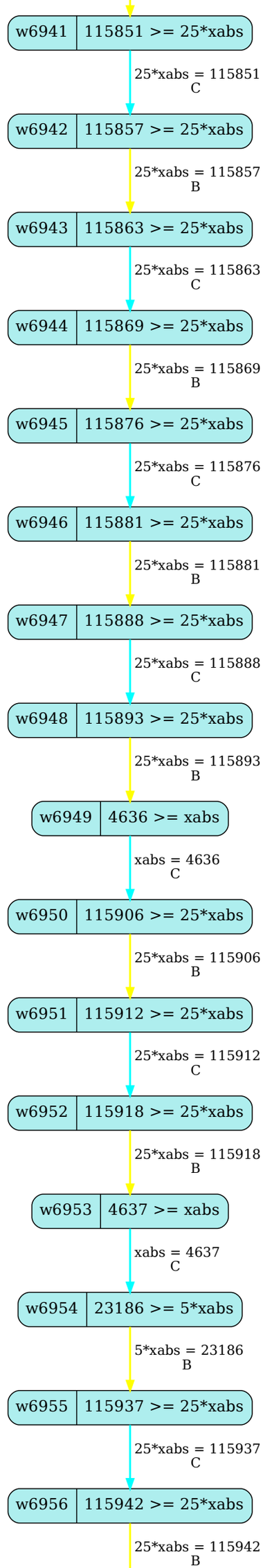
w6941
115851 >= 25*xabs
25*xabs = 115851
C
w6942
115857 >= 25*xabs
25*xabs = 115857
B
w6943
115863 >= 25*xabs
25*xabs = 115863
C
w6944
115869 >= 25*xabs
25*xabs = 115869
B
w6945
115876 >= 25*xabs
25*xabs = 115876
C
w6946
115881 >= 25*xabs
25*xabs = 115881
B
w6947
115888 >= 25*xabs
25*xabs = 115888
C
w6948
115893 >= 25*xabs
25*xabs = 115893
B
w6949
4636 >= xabs
xabs = 4636
C
w6950
115906 >= 25*xabs
25*xabs = 115906
B
w6951
115912 >= 25*xabs
25*xabs = 115912
C
w6952
115918 >= 25*xabs
25*xabs = 115918
B
w6953
4637 >= xabs
xabs = 4637
C
w6954
23186 >= 5*xabs
5*xabs = 23186
B
w6955
115937 >= 25*xabs
25*xabs = 115937
C
w6956
115942 >= 25*xabs
25*xabs = 115942
B

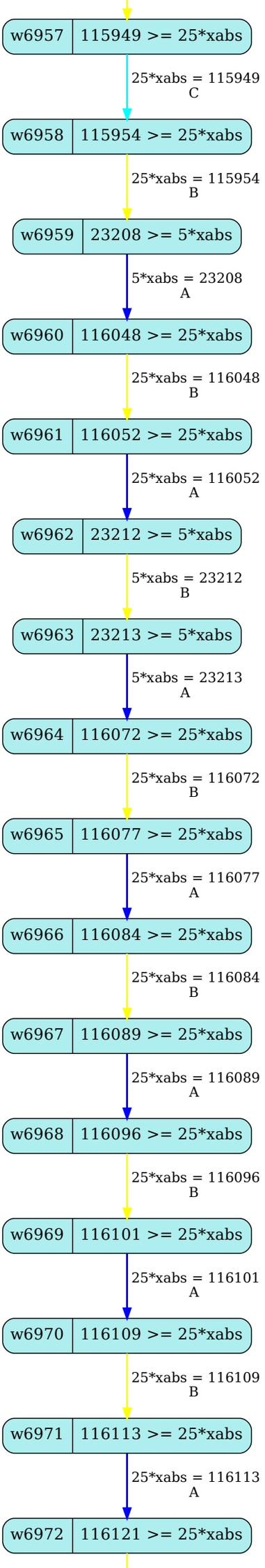
w6957
115949 >= 25*xabs
25*xabs = 115949
C
w6958
115954 >= 25*xabs
25*xabs = 115954
B
w6959
23208 >= 5*xabs
5*xabs = 23208
A
w6960
116048 >= 25*xabs
25*xabs = 116048
B
w6961
116052 >= 25*xabs
25*xabs = 116052
A
w6962
23212 >= 5*xabs
5*xabs = 23212
B
w6963
23213 >= 5*xabs
5*xabs = 23213
A
w6964
116072 >= 25*xabs
25*xabs = 116072
B
w6965
116077 >= 25*xabs
25*xabs = 116077
A
w6966
116084 >= 25*xabs
25*xabs = 116084
B
w6967
116089 >= 25*xabs
25*xabs = 116089
A
w6968
116096 >= 25*xabs
25*xabs = 116096
B
w6969
116101 >= 25*xabs
25*xabs = 116101
A
w6970
116109 >= 25*xabs
25*xabs = 116109
B
w6971
116113 >= 25*xabs
25*xabs = 116113
A
w6972
116121 >= 25*xabs

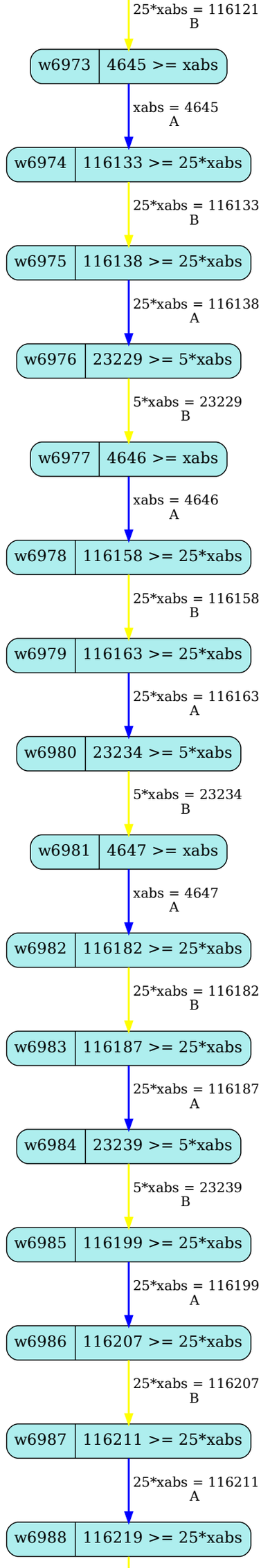
25*xabs = 116121
B
w6973
4645 >= xabs
xabs = 4645
A
w6974
116133 >= 25*xabs
25*xabs = 116133
B
w6975
116138 >= 25*xabs
25*xabs = 116138
A
w6976
23229 >= 5*xabs
5*xabs = 23229
B
w6977
4646 >= xabs
xabs = 4646
A
w6978
116158 >= 25*xabs
25*xabs = 116158
B
w6979
116163 >= 25*xabs
25*xabs = 116163
A
w6980
23234 >= 5*xabs
5*xabs = 23234
B
w6981
4647 >= xabs
xabs = 4647
A
w6982
116182 >= 25*xabs
25*xabs = 116182
B
w6983
116187 >= 25*xabs
25*xabs = 116187
A
w6984
23239 >= 5*xabs
5*xabs = 23239
B
w6985
116199 >= 25*xabs
25*xabs = 116199
A
w6986
116207 >= 25*xabs
25*xabs = 116207
B
w6987
116211 >= 25*xabs
25*xabs = 116211
A
w6988
116219 >= 25*xabs

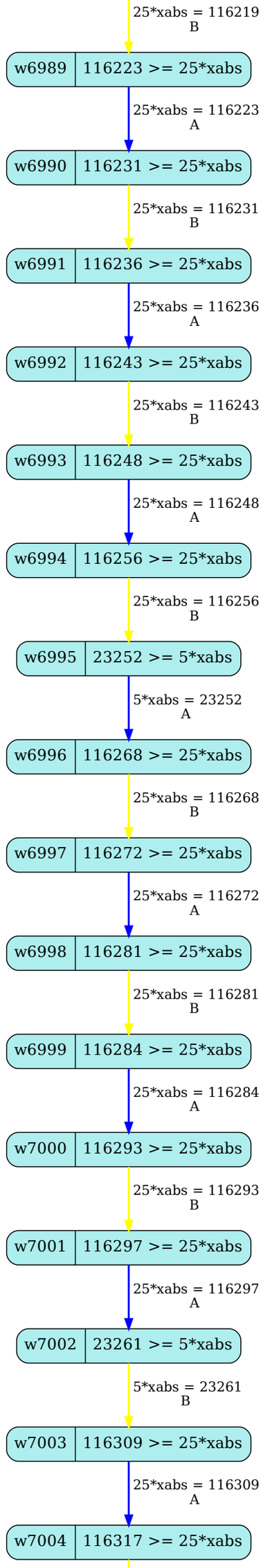
25*xabs = 116219
B
w6989
116223 >= 25*xabs
25*xabs = 116223
A
w6990
116231 >= 25*xabs
25*xabs = 116231
B
w6991
116236 >= 25*xabs
25*xabs = 116236
A
w6992
116243 >= 25*xabs
25*xabs = 116243
B
w6993
116248 >= 25*xabs
25*xabs = 116248
A
w6994
116256 >= 25*xabs
25*xabs = 116256
B
w6995
23252 >= 5*xabs
5*xabs = 23252
A
w6996
116268 >= 25*xabs
25*xabs = 116268
B
w6997
116272 >= 25*xabs
25*xabs = 116272
A
w6998
116281 >= 25*xabs
25*xabs = 116281
B
w6999
116284 >= 25*xabs
25*xabs = 116284
A
w7000
116293 >= 25*xabs
25*xabs = 116293
B
w7001
116297 >= 25*xabs
25*xabs = 116297
A
w7002
23261 >= 5*xabs
5*xabs = 23261
B
w7003
116309 >= 25*xabs
25*xabs = 116309
A
w7004
116317 >= 25*xabs

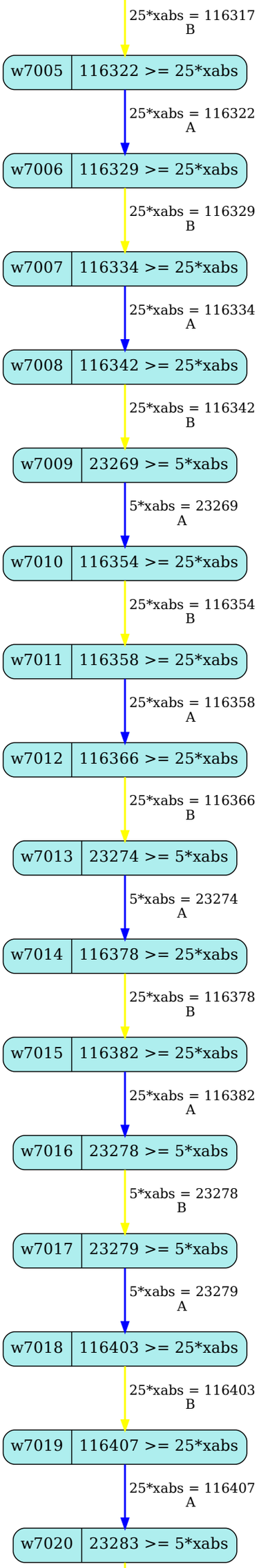
25*xabs = 116317
B
w7005
116322 >= 25*xabs
25*xabs = 116322
A
w7006
116329 >= 25*xabs
25*xabs = 116329
B
w7007
116334 >= 25*xabs
25*xabs = 116334
A
w7008
116342 >= 25*xabs
25*xabs = 116342
B
w7009
23269 >= 5*xabs
5*xabs = 23269
A
w7010
116354 >= 25*xabs
25*xabs = 116354
B
w7011
116358 >= 25*xabs
25*xabs = 116358
A
w7012
116366 >= 25*xabs
25*xabs = 116366
B
w7013
23274 >= 5*xabs
5*xabs = 23274
A
w7014
116378 >= 25*xabs
25*xabs = 116378
B
w7015
116382 >= 25*xabs
25*xabs = 116382
A
w7016
23278 >= 5*xabs
5*xabs = 23278
B
w7017
23279 >= 5*xabs
5*xabs = 23279
A
w7018
116403 >= 25*xabs
25*xabs = 116403
B
w7019
116407 >= 25*xabs
25*xabs = 116407
A
w7020
23283 >= 5*xabs

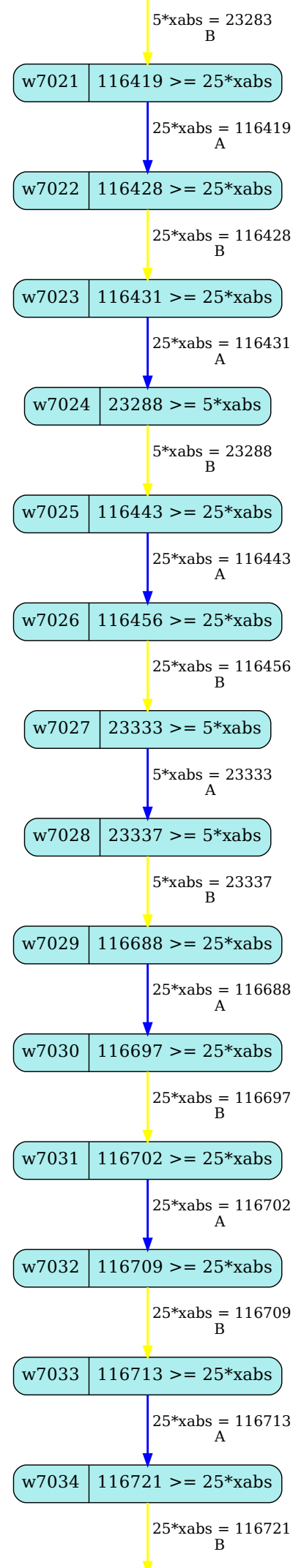
5*xabs = 23283
B
w7021
116419 >= 25*xabs
25*xabs = 116419
A
w7022
116428 >= 25*xabs
25*xabs = 116428
B
w7023
116431 >= 25*xabs
25*xabs = 116431
A
w7024
23288 >= 5*xabs
5*xabs = 23288
B
w7025
116443 >= 25*xabs
25*xabs = 116443
A
w7026
116456 >= 25*xabs
25*xabs = 116456
B
w7027
23333 >= 5*xabs
5*xabs = 23333
A
w7028
23337 >= 5*xabs
5*xabs = 23337
B
w7029
116688 >= 25*xabs
25*xabs = 116688
A
w7030
116697 >= 25*xabs
25*xabs = 116697
B
w7031
116702 >= 25*xabs
25*xabs = 116702
A
w7032
116709 >= 25*xabs
25*xabs = 116709
B
w7033
116713 >= 25*xabs
25*xabs = 116713
A
w7034
116721 >= 25*xabs
25*xabs = 116721
B

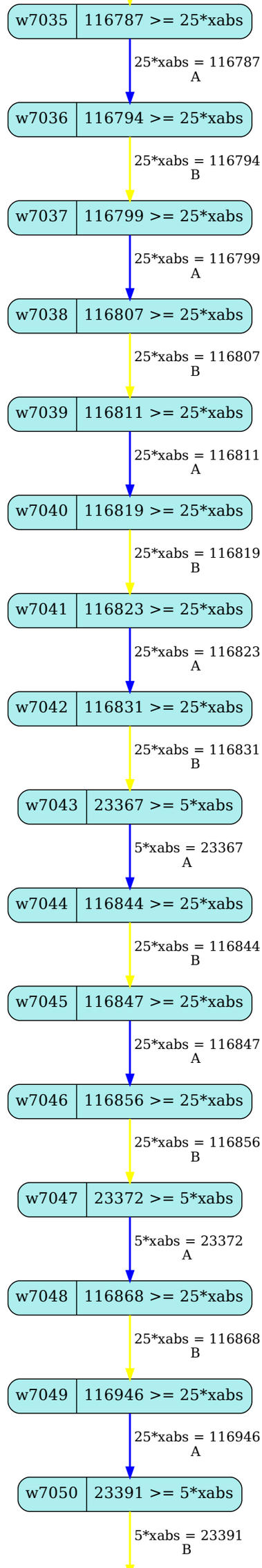
w7035
116787 >= 25*xabs
25*xabs = 116787
A
w7036
116794 >= 25*xabs
25*xabs = 116794
B
w7037
116799 >= 25*xabs
25*xabs = 116799
A
w7038
116807 >= 25*xabs
25*xabs = 116807
B
w7039
116811 >= 25*xabs
25*xabs = 116811
A
w7040
116819 >= 25*xabs
25*xabs = 116819
B
w7041
116823 >= 25*xabs
25*xabs = 116823
A
w7042
116831 >= 25*xabs
25*xabs = 116831
B
w7043
23367 >= 5*xabs
5*xabs = 23367
A
w7044
116844 >= 25*xabs
25*xabs = 116844
B
w7045
116847 >= 25*xabs
25*xabs = 116847
A
w7046
116856 >= 25*xabs
25*xabs = 116856
B
w7047
23372 >= 5*xabs
5*xabs = 23372
A
w7048
116868 >= 25*xabs
25*xabs = 116868
B
w7049
116946 >= 25*xabs
25*xabs = 116946
A
w7050
23391 >= 5*xabs
5*xabs = 23391
B

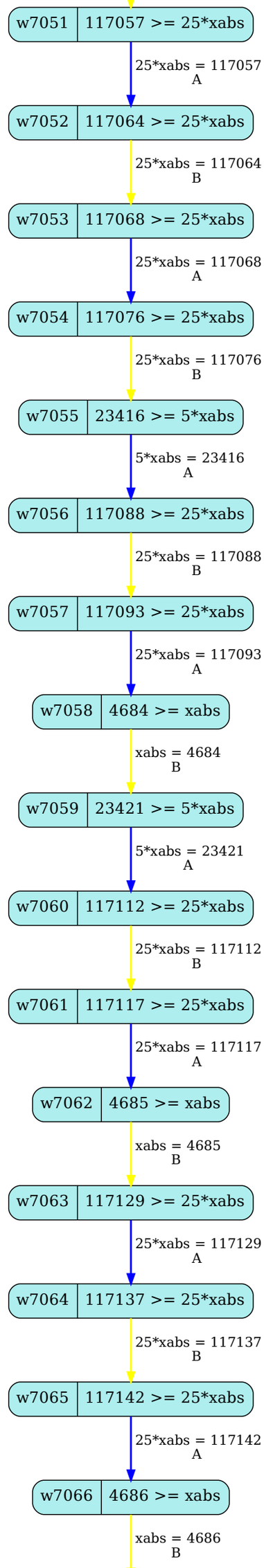
w7051
117057 >= 25*xabs
25*xabs = 117057
A
w7052
117064 >= 25*xabs
25*xabs = 117064
B
w7053
117068 >= 25*xabs
25*xabs = 117068
A
w7054
117076 >= 25*xabs
25*xabs = 117076
B
w7055
23416 >= 5*xabs
5*xabs = 23416
A
w7056
117088 >= 25*xabs
25*xabs = 117088
B
w7057
117093 >= 25*xabs
25*xabs = 117093
A
w7058
4684 >= xabs
xabs = 4684
B
w7059
23421 >= 5*xabs
5*xabs = 23421
A
w7060
117112 >= 25*xabs
25*xabs = 117112
B
w7061
117117 >= 25*xabs
25*xabs = 117117
A
w7062
4685 >= xabs
xabs = 4685
B
w7063
117129 >= 25*xabs
25*xabs = 117129
A
w7064
117137 >= 25*xabs
25*xabs = 117137
B
w7065
117142 >= 25*xabs
25*xabs = 117142
A
w7066
4686 >= xabs
xabs = 4686
B

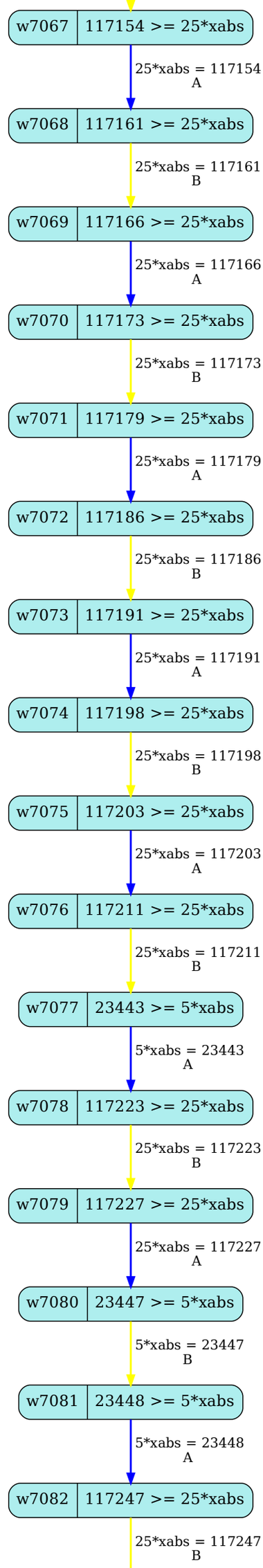
w7067
117154 >= 25*xabs
25*xabs = 117154
A
w7068
117161 >= 25*xabs
25*xabs = 117161
B
w7069
117166 >= 25*xabs
25*xabs = 117166
A
w7070
117173 >= 25*xabs
25*xabs = 117173
B
w7071
117179 >= 25*xabs
25*xabs = 117179
A
w7072
117186 >= 25*xabs
25*xabs = 117186
B
w7073
117191 >= 25*xabs
25*xabs = 117191
A
w7074
117198 >= 25*xabs
25*xabs = 117198
B
w7075
117203 >= 25*xabs
25*xabs = 117203
A
w7076
117211 >= 25*xabs
25*xabs = 117211
B
w7077
23443 >= 5*xabs
5*xabs = 23443
A
w7078
117223 >= 25*xabs
25*xabs = 117223
B
w7079
117227 >= 25*xabs
25*xabs = 117227
A
w7080
23447 >= 5*xabs
5*xabs = 23447
B
w7081
23448 >= 5*xabs
5*xabs = 23448
A
w7082
117247 >= 25*xabs
25*xabs = 117247
B

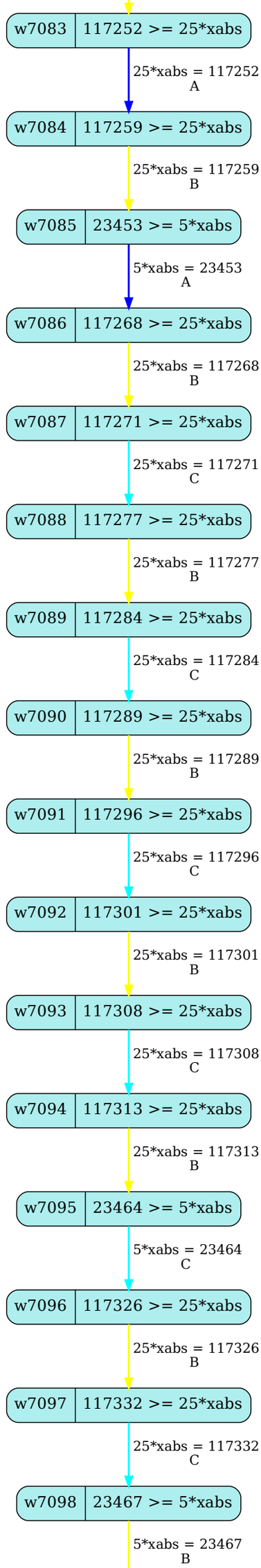
w7083
117252 >= 25*xabs
25*xabs = 117252
A
w7084
117259 >= 25*xabs
25*xabs = 117259
B
w7085
23453 >= 5*xabs
5*xabs = 23453
A
w7086
117268 >= 25*xabs
25*xabs = 117268
B
w7087
117271 >= 25*xabs
25*xabs = 117271
C
w7088
117277 >= 25*xabs
25*xabs = 117277
B
w7089
117284 >= 25*xabs
25*xabs = 117284
C
w7090
117289 >= 25*xabs
25*xabs = 117289
B
w7091
117296 >= 25*xabs
25*xabs = 117296
C
w7092
117301 >= 25*xabs
25*xabs = 117301
B
w7093
117308 >= 25*xabs
25*xabs = 117308
C
w7094
117313 >= 25*xabs
25*xabs = 117313
B
w7095
23464 >= 5*xabs
5*xabs = 23464
C
w7096
117326 >= 25*xabs
25*xabs = 117326
B
w7097
117332 >= 25*xabs
25*xabs = 117332
C
w7098
23467 >= 5*xabs
5*xabs = 23467
B

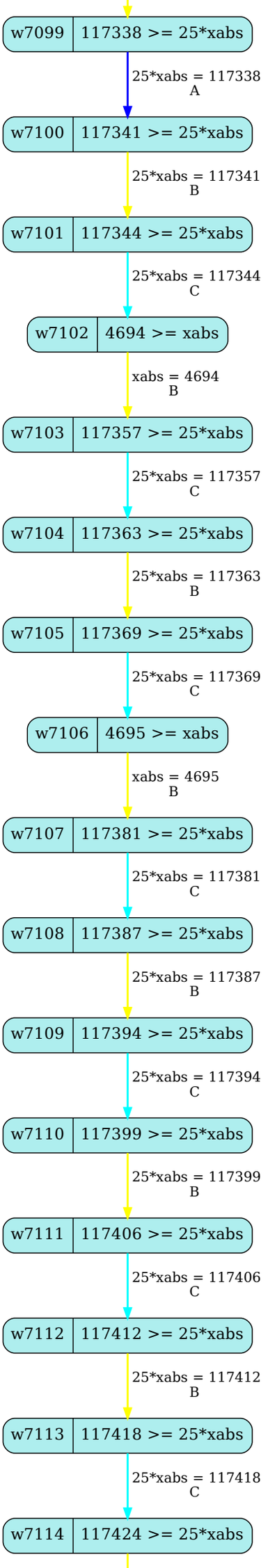
w7099
117338 >= 25*xabs
25*xabs = 117338
A
w7100
117341 >= 25*xabs
25*xabs = 117341
B
w7101
117344 >= 25*xabs
25*xabs = 117344
C
w7102
4694 >= xabs
xabs = 4694
B
w7103
117357 >= 25*xabs
25*xabs = 117357
C
w7104
117363 >= 25*xabs
25*xabs = 117363
B
w7105
117369 >= 25*xabs
25*xabs = 117369
C
w7106
4695 >= xabs
xabs = 4695
B
w7107
117381 >= 25*xabs
25*xabs = 117381
C
w7108
117387 >= 25*xabs
25*xabs = 117387
B
w7109
117394 >= 25*xabs
25*xabs = 117394
C
w7110
117399 >= 25*xabs
25*xabs = 117399
B
w7111
117406 >= 25*xabs
25*xabs = 117406
C
w7112
117412 >= 25*xabs
25*xabs = 117412
B
w7113
117418 >= 25*xabs
25*xabs = 117418
C
w7114
117424 >= 25*xabs

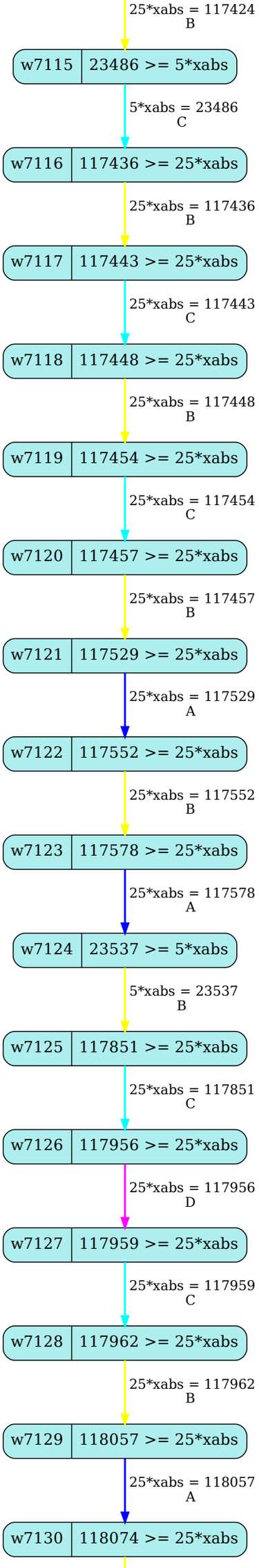
25*xabs = 117424
B
w7115
23486 >= 5*xabs
5*xabs = 23486
C
w7116
117436 >= 25*xabs
25*xabs = 117436
B
w7117
117443 >= 25*xabs
25*xabs = 117443
C
w7118
117448 >= 25*xabs
25*xabs = 117448
B
w7119
117454 >= 25*xabs
25*xabs = 117454
C
w7120
117457 >= 25*xabs
25*xabs = 117457
B
w7121
117529 >= 25*xabs
25*xabs = 117529
A
w7122
117552 >= 25*xabs
25*xabs = 117552
B
w7123
117578 >= 25*xabs
25*xabs = 117578
A
w7124
23537 >= 5*xabs
5*xabs = 23537
B
w7125
117851 >= 25*xabs
25*xabs = 117851
C
w7126
117956 >= 25*xabs
25*xabs = 117956
D
w7127
117959 >= 25*xabs
25*xabs = 117959
C
w7128
117962 >= 25*xabs
25*xabs = 117962
B
w7129
118057 >= 25*xabs
25*xabs = 118057
A
w7130
118074 >= 25*xabs

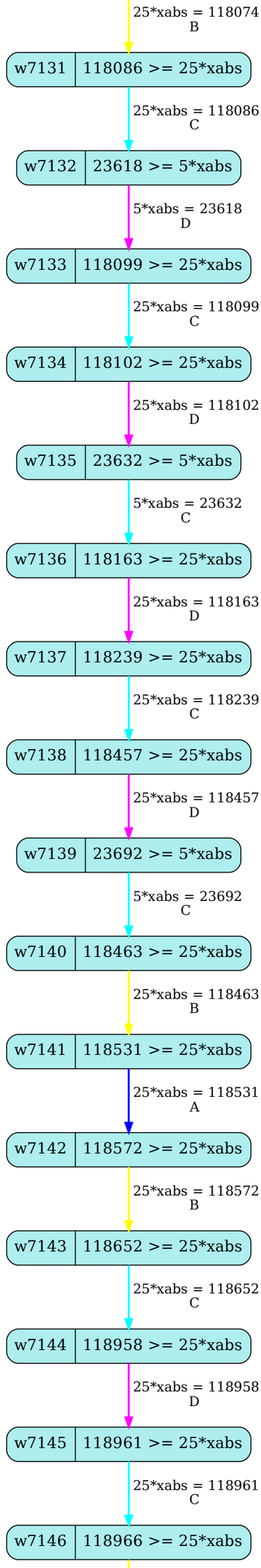
25*xabs = 118074
B
w7131
118086 >= 25*xabs
25*xabs = 118086
C
w7132
23618 >= 5*xabs
5*xabs = 23618
D
w7133
118099 >= 25*xabs
25*xabs = 118099
C
w7134
118102 >= 25*xabs
25*xabs = 118102
D
w7135
23632 >= 5*xabs
5*xabs = 23632
C
w7136
118163 >= 25*xabs
25*xabs = 118163
D
w7137
118239 >= 25*xabs
25*xabs = 118239
C
w7138
118457 >= 25*xabs
25*xabs = 118457
D
w7139
23692 >= 5*xabs
5*xabs = 23692
C
w7140
118463 >= 25*xabs
25*xabs = 118463
B
w7141
118531 >= 25*xabs
25*xabs = 118531
A
w7142
118572 >= 25*xabs
25*xabs = 118572
B
w7143
118652 >= 25*xabs
25*xabs = 118652
C
w7144
118958 >= 25*xabs
25*xabs = 118958
D
w7145
118961 >= 25*xabs
25*xabs = 118961
C
w7146
118966 >= 25*xabs

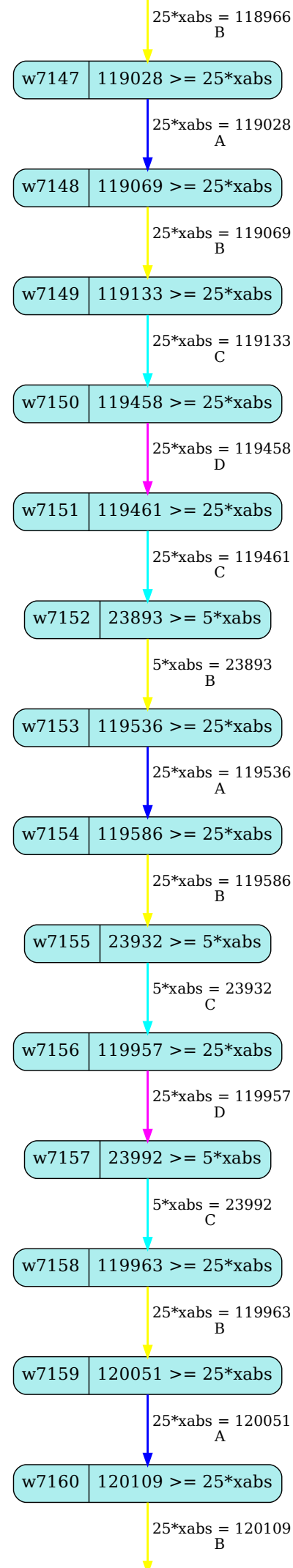
25*xabs = 118966
B
w7147
119028 >= 25*xabs
25*xabs = 119028
A
w7148
119069 >= 25*xabs
25*xabs = 119069
B
w7149
119133 >= 25*xabs
25*xabs = 119133
C
w7150
119458 >= 25*xabs
25*xabs = 119458
D
w7151
119461 >= 25*xabs
25*xabs = 119461
C
w7152
23893 >= 5*xabs
5*xabs = 23893
B
w7153
119536 >= 25*xabs
25*xabs = 119536
A
w7154
119586 >= 25*xabs
25*xabs = 119586
B
w7155
23932 >= 5*xabs
5*xabs = 23932
C
w7156
119957 >= 25*xabs
25*xabs = 119957
D
w7157
23992 >= 5*xabs
5*xabs = 23992
C
w7158
119963 >= 25*xabs
25*xabs = 119963
B
w7159
120051 >= 25*xabs
25*xabs = 120051
A
w7160
120109 >= 25*xabs
25*xabs = 120109
B

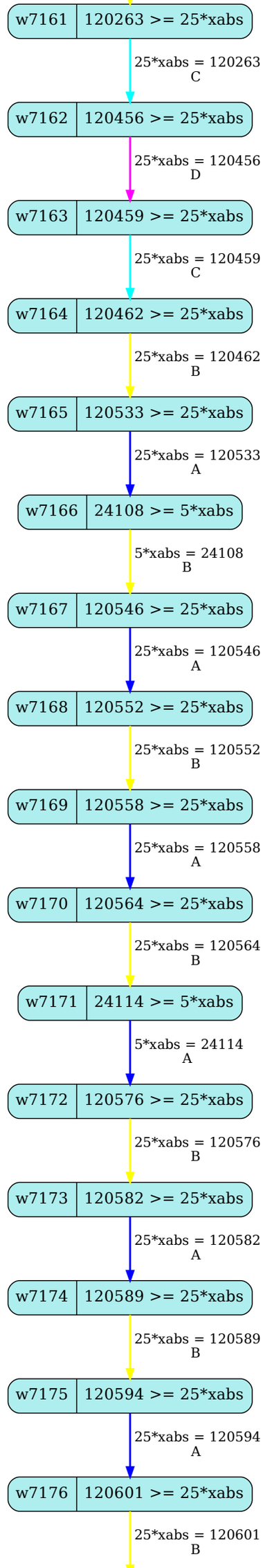
w7161
120263 >= 25*xabs
25*xabs = 120263
C
w7162
120456 >= 25*xabs
25*xabs = 120456
D
w7163
120459 >= 25*xabs
25*xabs = 120459
C
w7164
120462 >= 25*xabs
25*xabs = 120462
B
w7165
120533 >= 25*xabs
25*xabs = 120533
A
w7166
24108 >= 5*xabs
5*xabs = 24108
B
w7167
120546 >= 25*xabs
25*xabs = 120546
A
w7168
120552 >= 25*xabs
25*xabs = 120552
B
w7169
120558 >= 25*xabs
25*xabs = 120558
A
w7170
120564 >= 25*xabs
25*xabs = 120564
B
w7171
24114 >= 5*xabs
5*xabs = 24114
A
w7172
120576 >= 25*xabs
25*xabs = 120576
B
w7173
120582 >= 25*xabs
25*xabs = 120582
A
w7174
120589 >= 25*xabs
25*xabs = 120589
B
w7175
120594 >= 25*xabs
25*xabs = 120594
A
w7176
120601 >= 25*xabs
25*xabs = 120601
B

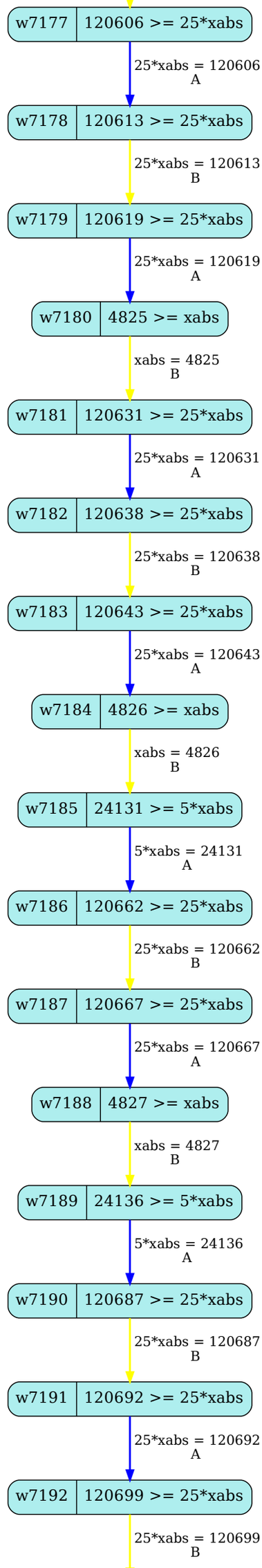
w7177
120606 >= 25*xabs
25*xabs = 120606
A
w7178
120613 >= 25*xabs
25*xabs = 120613
B
w7179
120619 >= 25*xabs
25*xabs = 120619
A
w7180
4825 >= xabs
xabs = 4825
B
w7181
120631 >= 25*xabs
25*xabs = 120631
A
w7182
120638 >= 25*xabs
25*xabs = 120638
B
w7183
120643 >= 25*xabs
25*xabs = 120643
A
w7184
4826 >= xabs
xabs = 4826
B
w7185
24131 >= 5*xabs
5*xabs = 24131
A
w7186
120662 >= 25*xabs
25*xabs = 120662
B
w7187
120667 >= 25*xabs
25*xabs = 120667
A
w7188
4827 >= xabs
xabs = 4827
B
w7189
24136 >= 5*xabs
5*xabs = 24136
A
w7190
120687 >= 25*xabs
25*xabs = 120687
B
w7191
120692 >= 25*xabs
25*xabs = 120692
A
w7192
120699 >= 25*xabs
25*xabs = 120699
B

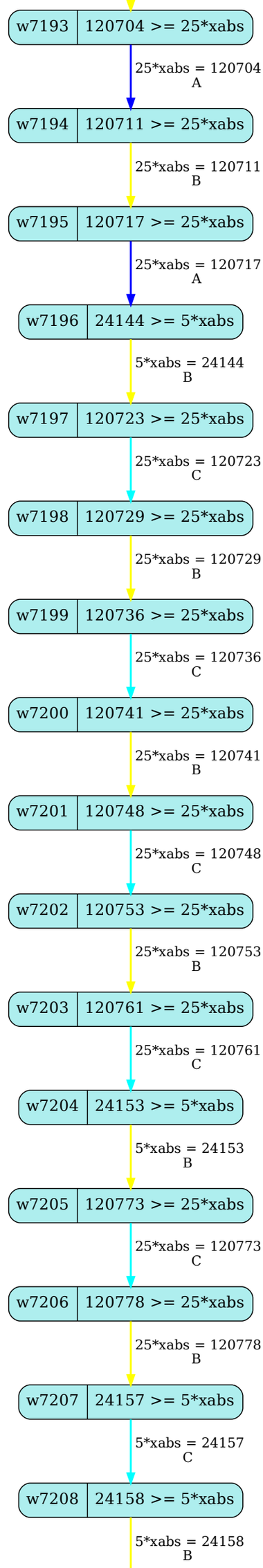
w7193
120704 >= 25*xabs
25*xabs = 120704
A
w7194
120711 >= 25*xabs
25*xabs = 120711
B
w7195
120717 >= 25*xabs
25*xabs = 120717
A
w7196
24144 >= 5*xabs
5*xabs = 24144
B
w7197
120723 >= 25*xabs
25*xabs = 120723
C
w7198
120729 >= 25*xabs
25*xabs = 120729
B
w7199
120736 >= 25*xabs
25*xabs = 120736
C
w7200
120741 >= 25*xabs
25*xabs = 120741
B
w7201
120748 >= 25*xabs
25*xabs = 120748
C
w7202
120753 >= 25*xabs
25*xabs = 120753
B
w7203
120761 >= 25*xabs
25*xabs = 120761
C
w7204
24153 >= 5*xabs
5*xabs = 24153
B
w7205
120773 >= 25*xabs
25*xabs = 120773
C
w7206
120778 >= 25*xabs
25*xabs = 120778
B
w7207
24157 >= 5*xabs
5*xabs = 24157
C
w7208
24158 >= 5*xabs
5*xabs = 24158
B

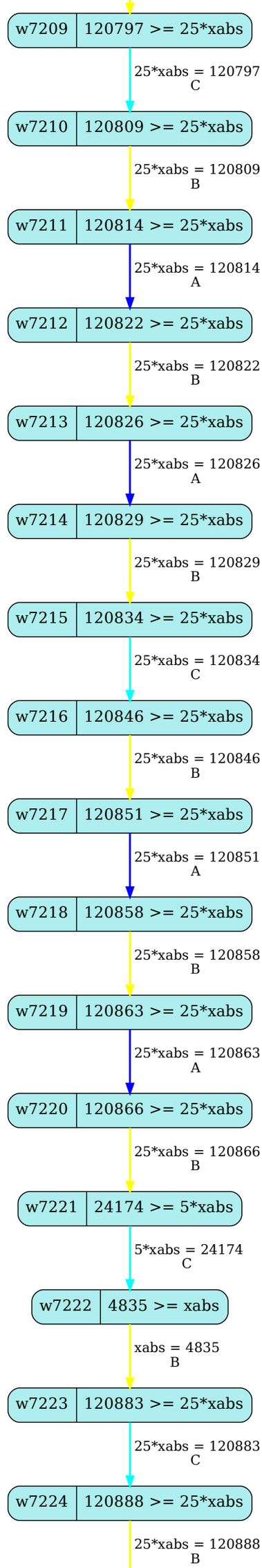
w7209
120797 >= 25*xabs
25*xabs = 120797
C
w7210
120809 >= 25*xabs
25*xabs = 120809
B
w7211
120814 >= 25*xabs
25*xabs = 120814
A
w7212
120822 >= 25*xabs
25*xabs = 120822
B
w7213
120826 >= 25*xabs
25*xabs = 120826
A
w7214
120829 >= 25*xabs
25*xabs = 120829
B
w7215
120834 >= 25*xabs
25*xabs = 120834
C
w7216
120846 >= 25*xabs
25*xabs = 120846
B
w7217
120851 >= 25*xabs
25*xabs = 120851
A
w7218
120858 >= 25*xabs
25*xabs = 120858
B
w7219
120863 >= 25*xabs
25*xabs = 120863
A
w7220
120866 >= 25*xabs
25*xabs = 120866
B
w7221
24174 >= 5*xabs
5*xabs = 24174
C
w7222
4835 >= xabs
xabs = 4835
B
w7223
120883 >= 25*xabs
25*xabs = 120883
C
w7224
120888 >= 25*xabs
25*xabs = 120888
B

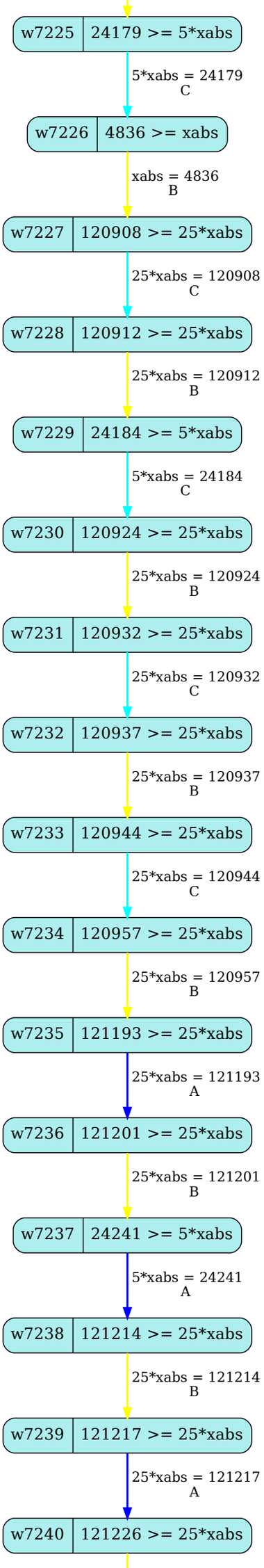
w7225
24179 >= 5*xabs
5*xabs = 24179
C
w7226
4836 >= xabs
xabs = 4836
B
w7227
120908 >= 25*xabs
25*xabs = 120908
C
w7228
120912 >= 25*xabs
25*xabs = 120912
B
w7229
24184 >= 5*xabs
5*xabs = 24184
C
w7230
120924 >= 25*xabs
25*xabs = 120924
B
w7231
120932 >= 25*xabs
25*xabs = 120932
C
w7232
120937 >= 25*xabs
25*xabs = 120937
B
w7233
120944 >= 25*xabs
25*xabs = 120944
C
w7234
120957 >= 25*xabs
25*xabs = 120957
B
w7235
121193 >= 25*xabs
25*xabs = 121193
A
w7236
121201 >= 25*xabs
25*xabs = 121201
B
w7237
24241 >= 5*xabs
5*xabs = 24241
A
w7238
121214 >= 25*xabs
25*xabs = 121214
B
w7239
121217 >= 25*xabs
25*xabs = 121217
A
w7240
121226 >= 25*xabs

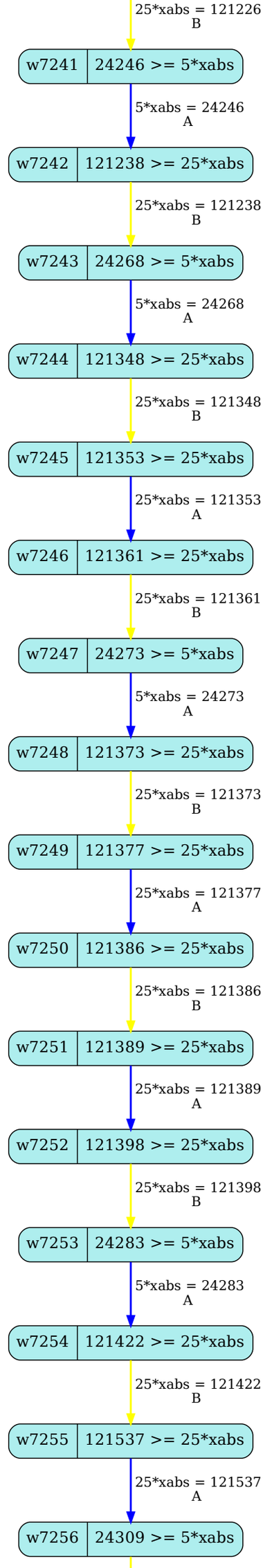
25*xabs = 121226
B
w7241
24246 >= 5*xabs
5*xabs = 24246
A
w7242
121238 >= 25*xabs
25*xabs = 121238
B
w7243
24268 >= 5*xabs
5*xabs = 24268
A
w7244
121348 >= 25*xabs
25*xabs = 121348
B
w7245
121353 >= 25*xabs
25*xabs = 121353
A
w7246
121361 >= 25*xabs
25*xabs = 121361
B
w7247
24273 >= 5*xabs
5*xabs = 24273
A
w7248
121373 >= 25*xabs
25*xabs = 121373
B
w7249
121377 >= 25*xabs
25*xabs = 121377
A
w7250
121386 >= 25*xabs
25*xabs = 121386
B
w7251
121389 >= 25*xabs
25*xabs = 121389
A
w7252
121398 >= 25*xabs
25*xabs = 121398
B
w7253
24283 >= 5*xabs
5*xabs = 24283
A
w7254
121422 >= 25*xabs
25*xabs = 121422
B
w7255
121537 >= 25*xabs
25*xabs = 121537
A
w7256
24309 >= 5*xabs

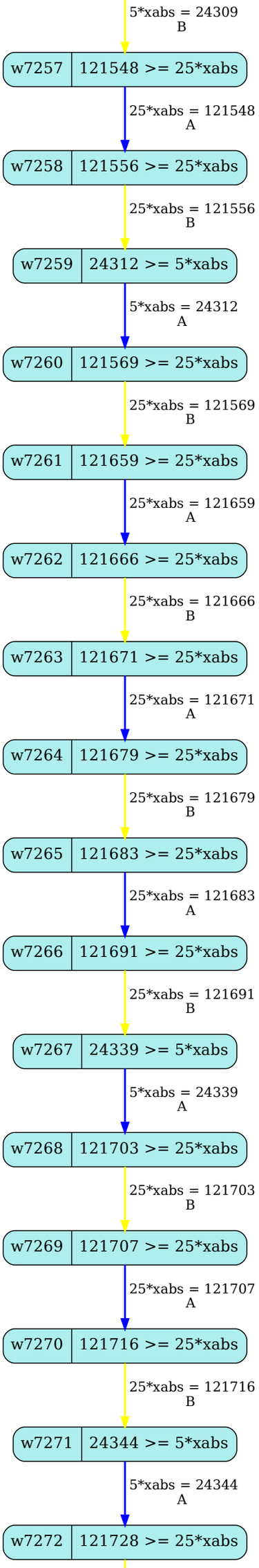
5*xabs = 24309
B
w7257
121548 >= 25*xabs
25*xabs = 121548
A
w7258
121556 >= 25*xabs
25*xabs = 121556
B
w7259
24312 >= 5*xabs
5*xabs = 24312
A
w7260
121569 >= 25*xabs
25*xabs = 121569
B
w7261
121659 >= 25*xabs
25*xabs = 121659
A
w7262
121666 >= 25*xabs
25*xabs = 121666
B
w7263
121671 >= 25*xabs
25*xabs = 121671
A
w7264
121679 >= 25*xabs
25*xabs = 121679
B
w7265
121683 >= 25*xabs
25*xabs = 121683
A
w7266
121691 >= 25*xabs
25*xabs = 121691
B
w7267
24339 >= 5*xabs
5*xabs = 24339
A
w7268
121703 >= 25*xabs
25*xabs = 121703
B
w7269
121707 >= 25*xabs
25*xabs = 121707
A
w7270
121716 >= 25*xabs
25*xabs = 121716
B
w7271
24344 >= 5*xabs
5*xabs = 24344
A
w7272
121728 >= 25*xabs

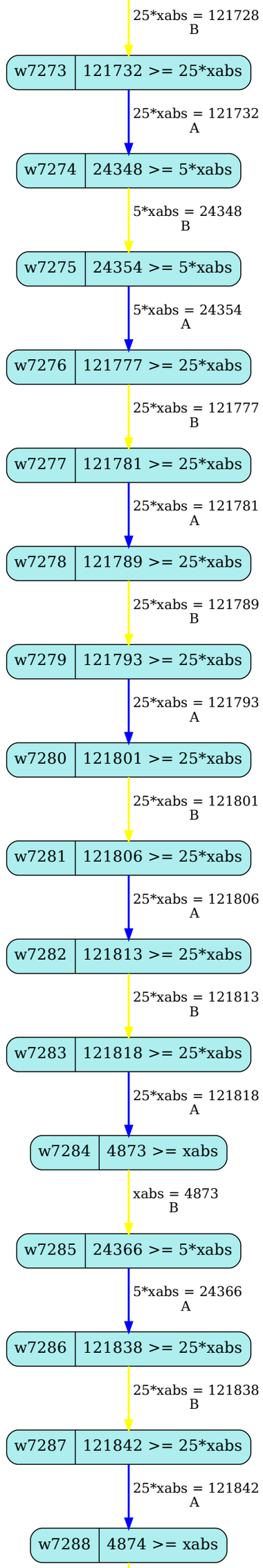
25*xabs = 121728
B
w7273
121732 >= 25*xabs
25*xabs = 121732
A
w7274
24348 >= 5*xabs
5*xabs = 24348
B
w7275
24354 >= 5*xabs
5*xabs = 24354
A
w7276
121777 >= 25*xabs
25*xabs = 121777
B
w7277
121781 >= 25*xabs
25*xabs = 121781
A
w7278
121789 >= 25*xabs
25*xabs = 121789
B
w7279
121793 >= 25*xabs
25*xabs = 121793
A
w7280
121801 >= 25*xabs
25*xabs = 121801
B
w7281
121806 >= 25*xabs
25*xabs = 121806
A
w7282
121813 >= 25*xabs
25*xabs = 121813
B
w7283
121818 >= 25*xabs
25*xabs = 121818
A
w7284
4873 >= xabs
xabs = 4873
B
w7285
24366 >= 5*xabs
5*xabs = 24366
A
w7286
121838 >= 25*xabs
25*xabs = 121838
B
w7287
121842 >= 25*xabs
25*xabs = 121842
A
w7288
4874 >= xabs

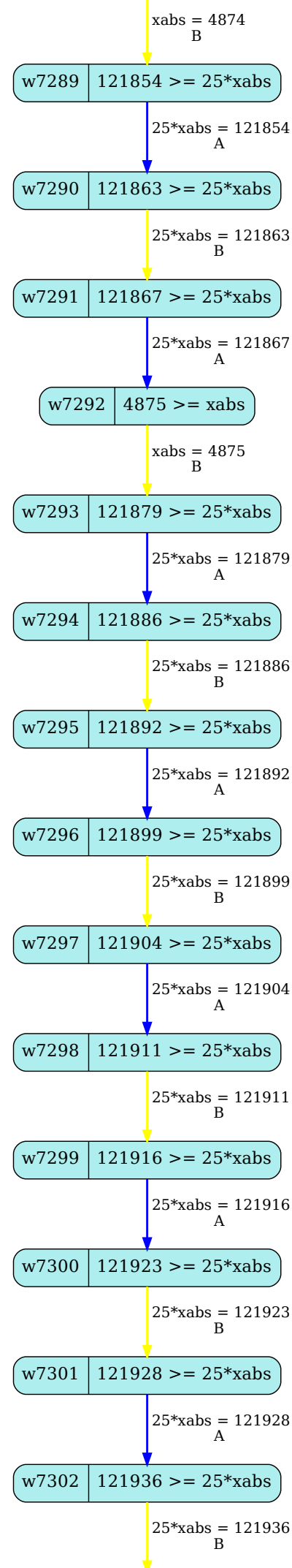
xabs = 4874
B
w7289
121854 >= 25*xabs
25*xabs = 121854
A
w7290
121863 >= 25*xabs
25*xabs = 121863
B
w7291
121867 >= 25*xabs
25*xabs = 121867
A
w7292
4875 >= xabs
xabs = 4875
B
w7293
121879 >= 25*xabs
25*xabs = 121879
A
w7294
121886 >= 25*xabs
25*xabs = 121886
B
w7295
121892 >= 25*xabs
25*xabs = 121892
A
w7296
121899 >= 25*xabs
25*xabs = 121899
B
w7297
121904 >= 25*xabs
25*xabs = 121904
A
w7298
121911 >= 25*xabs
25*xabs = 121911
B
w7299
121916 >= 25*xabs
25*xabs = 121916
A
w7300
121923 >= 25*xabs
25*xabs = 121923
B
w7301
121928 >= 25*xabs
25*xabs = 121928
A
w7302
121936 >= 25*xabs
25*xabs = 121936
B

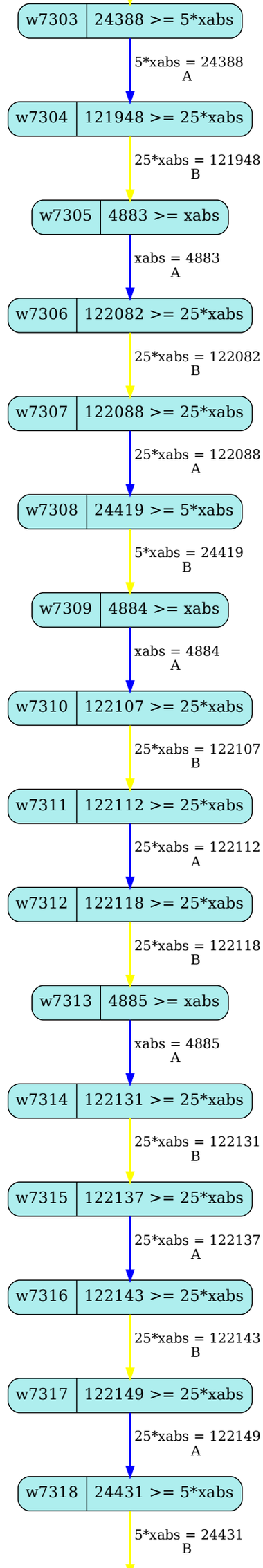
w7303
24388 >= 5*xabs
5*xabs = 24388
A
w7304
121948 >= 25*xabs
25*xabs = 121948
B
w7305
4883 >= xabs
xabs = 4883
A
w7306
122082 >= 25*xabs
25*xabs = 122082
B
w7307
122088 >= 25*xabs
25*xabs = 122088
A
w7308
24419 >= 5*xabs
5*xabs = 24419
B
w7309
4884 >= xabs
xabs = 4884
A
w7310
122107 >= 25*xabs
25*xabs = 122107
B
w7311
122112 >= 25*xabs
25*xabs = 122112
A
w7312
122118 >= 25*xabs
25*xabs = 122118
B
w7313
4885 >= xabs
xabs = 4885
A
w7314
122131 >= 25*xabs
25*xabs = 122131
B
w7315
122137 >= 25*xabs
25*xabs = 122137
A
w7316
122143 >= 25*xabs
25*xabs = 122143
B
w7317
122149 >= 25*xabs
25*xabs = 122149
A
w7318
24431 >= 5*xabs
5*xabs = 24431
B

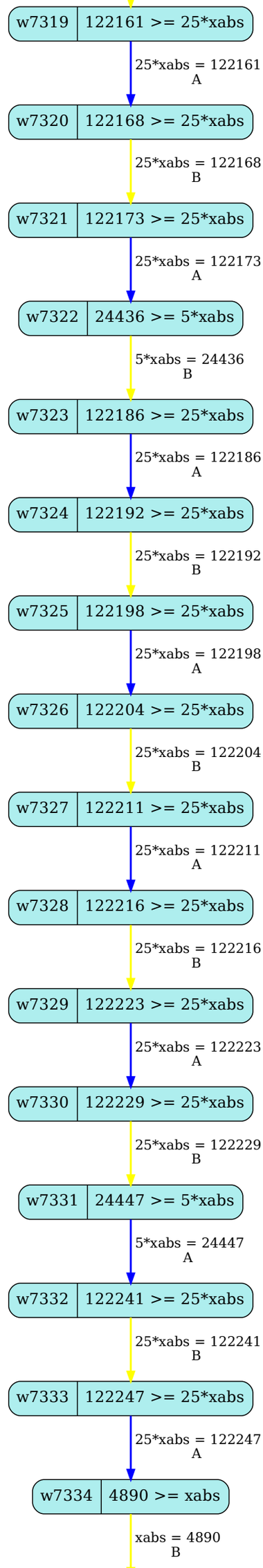
w7319
122161 >= 25*xabs
25*xabs = 122161
A
w7320
122168 >= 25*xabs
25*xabs = 122168
B
w7321
122173 >= 25*xabs
25*xabs = 122173
A
w7322
24436 >= 5*xabs
5*xabs = 24436
B
w7323
122186 >= 25*xabs
25*xabs = 122186
A
w7324
122192 >= 25*xabs
25*xabs = 122192
B
w7325
122198 >= 25*xabs
25*xabs = 122198
A
w7326
122204 >= 25*xabs
25*xabs = 122204
B
w7327
122211 >= 25*xabs
25*xabs = 122211
A
w7328
122216 >= 25*xabs
25*xabs = 122216
B
w7329
122223 >= 25*xabs
25*xabs = 122223
A
w7330
122229 >= 25*xabs
25*xabs = 122229
B
w7331
24447 >= 5*xabs
5*xabs = 24447
A
w7332
122241 >= 25*xabs
25*xabs = 122241
B
w7333
122247 >= 25*xabs
25*xabs = 122247
A
w7334
4890 >= xabs
xabs = 4890
B

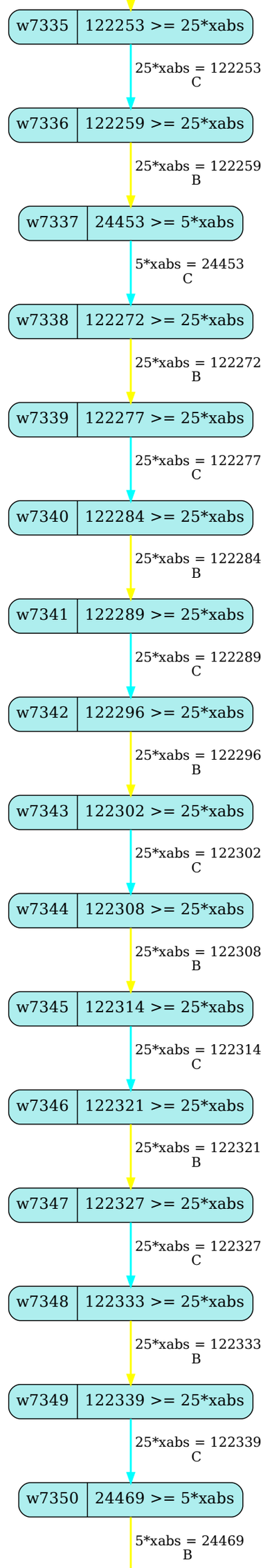
w7335
122253 >= 25*xabs
25*xabs = 122253
C
w7336
122259 >= 25*xabs
25*xabs = 122259
B
w7337
24453 >= 5*xabs
5*xabs = 24453
C
w7338
122272 >= 25*xabs
25*xabs = 122272
B
w7339
122277 >= 25*xabs
25*xabs = 122277
C
w7340
122284 >= 25*xabs
25*xabs = 122284
B
w7341
122289 >= 25*xabs
25*xabs = 122289
C
w7342
122296 >= 25*xabs
25*xabs = 122296
B
w7343
122302 >= 25*xabs
25*xabs = 122302
C
w7344
122308 >= 25*xabs
25*xabs = 122308
B
w7345
122314 >= 25*xabs
25*xabs = 122314
C
w7346
122321 >= 25*xabs
25*xabs = 122321
B
w7347
122327 >= 25*xabs
25*xabs = 122327
C
w7348
122333 >= 25*xabs
25*xabs = 122333
B
w7349
122339 >= 25*xabs
25*xabs = 122339
C
w7350
24469 >= 5*xabs
5*xabs = 24469
B

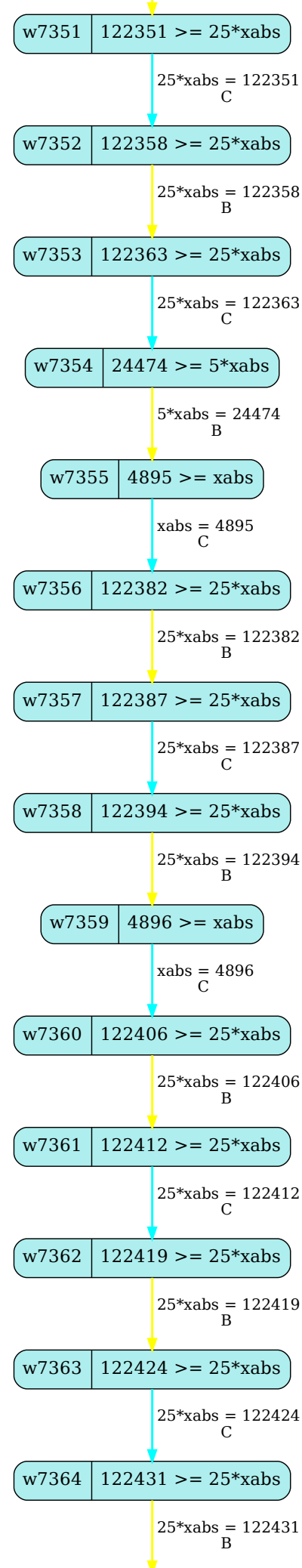
w7351
122351 >= 25*xabs
25*xabs = 122351
C
w7352
122358 >= 25*xabs
25*xabs = 122358
B
w7353
122363 >= 25*xabs
25*xabs = 122363
C
w7354
24474 >= 5*xabs
5*xabs = 24474
B
w7355
4895 >= xabs
xabs = 4895
C
w7356
122382 >= 25*xabs
25*xabs = 122382
B
w7357
122387 >= 25*xabs
25*xabs = 122387
C
w7358
122394 >= 25*xabs
25*xabs = 122394
B
w7359
4896 >= xabs
xabs = 4896
C
w7360
122406 >= 25*xabs
25*xabs = 122406
B
w7361
122412 >= 25*xabs
25*xabs = 122412
C
w7362
122419 >= 25*xabs
25*xabs = 122419
B
w7363
122424 >= 25*xabs
25*xabs = 122424
C
w7364
122431 >= 25*xabs
25*xabs = 122431
B

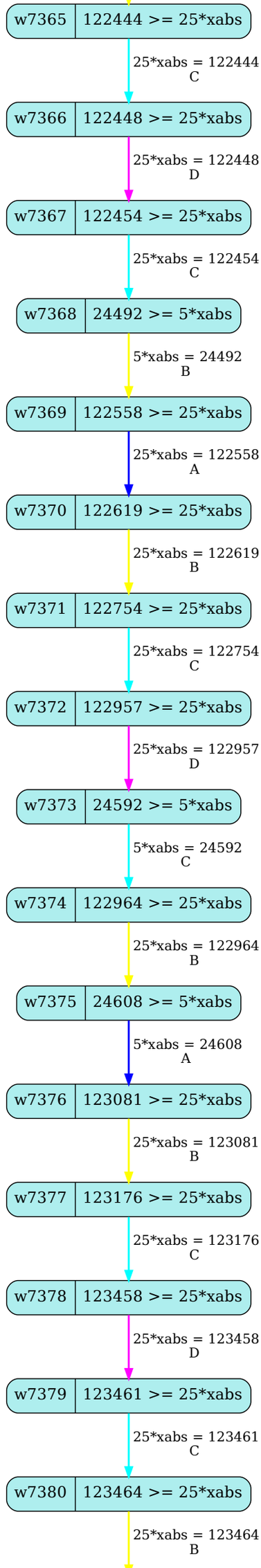
w7365
122444 >= 25*xabs
25*xabs = 122444
C
w7366
122448 >= 25*xabs
25*xabs = 122448
D
w7367
122454 >= 25*xabs
25*xabs = 122454
C
w7368
24492 >= 5*xabs
5*xabs = 24492
B
w7369
122558 >= 25*xabs
25*xabs = 122558
A
w7370
122619 >= 25*xabs
25*xabs = 122619
B
w7371
122754 >= 25*xabs
25*xabs = 122754
C
w7372
122957 >= 25*xabs
25*xabs = 122957
D
w7373
24592 >= 5*xabs
5*xabs = 24592
C
w7374
122964 >= 25*xabs
25*xabs = 122964
B
w7375
24608 >= 5*xabs
5*xabs = 24608
A
w7376
123081 >= 25*xabs
25*xabs = 123081
B
w7377
123176 >= 25*xabs
25*xabs = 123176
C
w7378
123458 >= 25*xabs
25*xabs = 123458
D
w7379
123461 >= 25*xabs
25*xabs = 123461
C
w7380
123464 >= 25*xabs
25*xabs = 123464
B

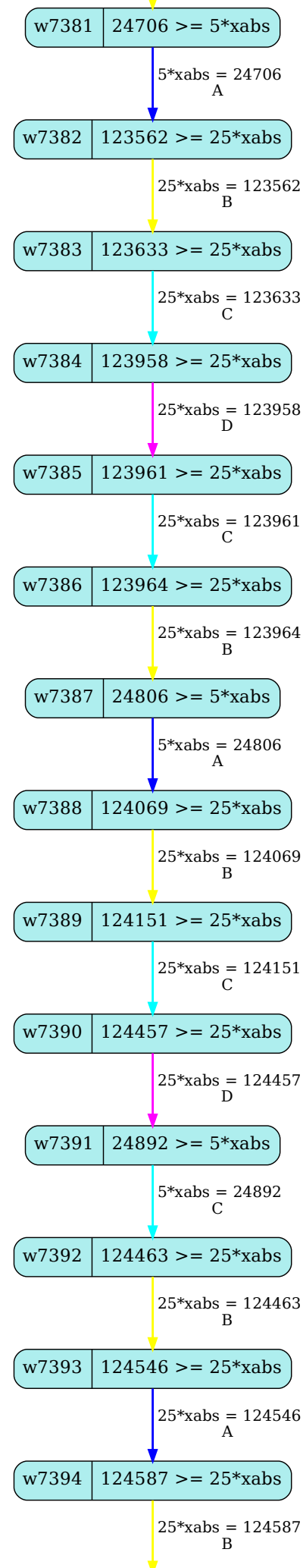
w7381
24706 >= 5*xabs
5*xabs = 24706
A
w7382
123562 >= 25*xabs
25*xabs = 123562
B
w7383
123633 >= 25*xabs
25*xabs = 123633
C
w7384
123958 >= 25*xabs
25*xabs = 123958
D
w7385
123961 >= 25*xabs
25*xabs = 123961
C
w7386
123964 >= 25*xabs
25*xabs = 123964
B
w7387
24806 >= 5*xabs
5*xabs = 24806
A
w7388
124069 >= 25*xabs
25*xabs = 124069
B
w7389
124151 >= 25*xabs
25*xabs = 124151
C
w7390
124457 >= 25*xabs
25*xabs = 124457
D
w7391
24892 >= 5*xabs
5*xabs = 24892
C
w7392
124463 >= 25*xabs
25*xabs = 124463
B
w7393
124546 >= 25*xabs
25*xabs = 124546
A
w7394
124587 >= 25*xabs
25*xabs = 124587
B

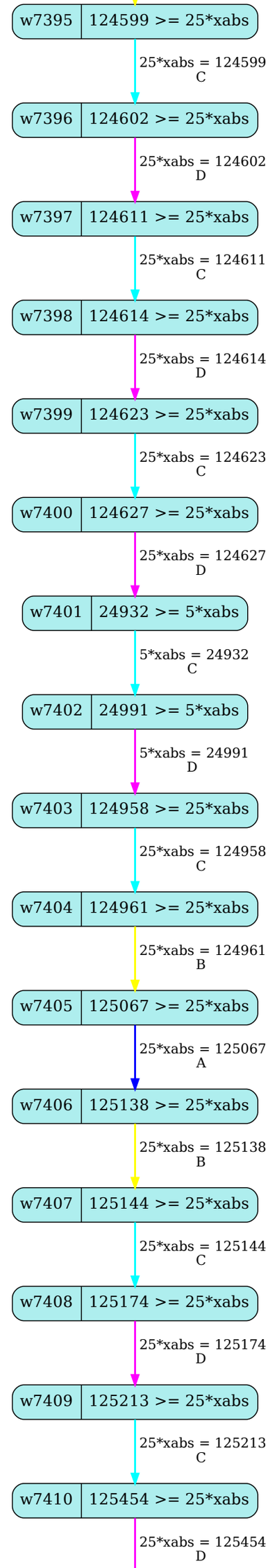
w7395
124599 >= 25*xabs
25*xabs = 124599
C
w7396
124602 >= 25*xabs
25*xabs = 124602
D
w7397
124611 >= 25*xabs
25*xabs = 124611
C
w7398
124614 >= 25*xabs
25*xabs = 124614
D
w7399
124623 >= 25*xabs
25*xabs = 124623
C
w7400
124627 >= 25*xabs
25*xabs = 124627
D
w7401
24932 >= 5*xabs
5*xabs = 24932
C
w7402
24991 >= 5*xabs
5*xabs = 24991
D
w7403
124958 >= 25*xabs
25*xabs = 124958
C
w7404
124961 >= 25*xabs
25*xabs = 124961
B
w7405
125067 >= 25*xabs
25*xabs = 125067
A
w7406
125138 >= 25*xabs
25*xabs = 125138
B
w7407
125144 >= 25*xabs
25*xabs = 125144
C
w7408
125174 >= 25*xabs
25*xabs = 125174
D
w7409
125213 >= 25*xabs
25*xabs = 125213
C
w7410
125454 >= 25*xabs
25*xabs = 125454
D

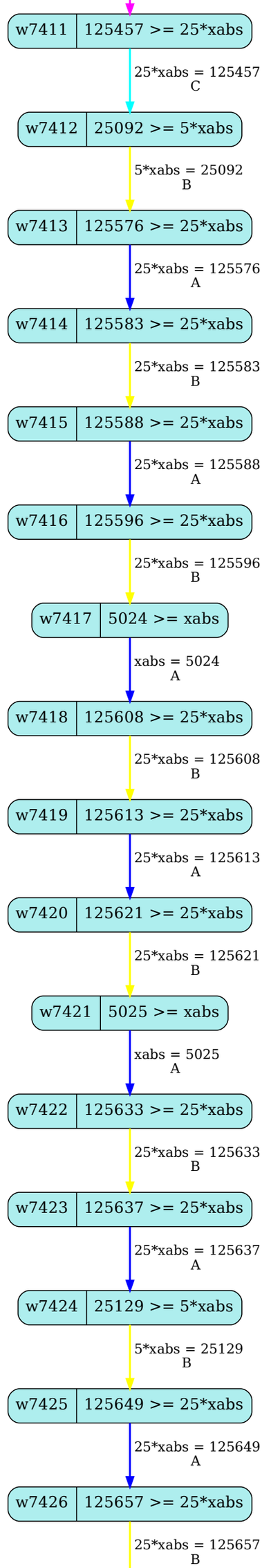
w7411
125457 >= 25*xabs
25*xabs = 125457
C
w7412
25092 >= 5*xabs
5*xabs = 25092
B
w7413
125576 >= 25*xabs
25*xabs = 125576
A
w7414
125583 >= 25*xabs
25*xabs = 125583
B
w7415
125588 >= 25*xabs
25*xabs = 125588
A
w7416
125596 >= 25*xabs
25*xabs = 125596
B
w7417
5024 >= xabs
xabs = 5024
A
w7418
125608 >= 25*xabs
25*xabs = 125608
B
w7419
125613 >= 25*xabs
25*xabs = 125613
A
w7420
125621 >= 25*xabs
25*xabs = 125621
B
w7421
5025 >= xabs
xabs = 5025
A
w7422
125633 >= 25*xabs
25*xabs = 125633
B
w7423
125637 >= 25*xabs
25*xabs = 125637
A
w7424
25129 >= 5*xabs
5*xabs = 25129
B
w7425
125649 >= 25*xabs
25*xabs = 125649
A
w7426
125657 >= 25*xabs
25*xabs = 125657
B

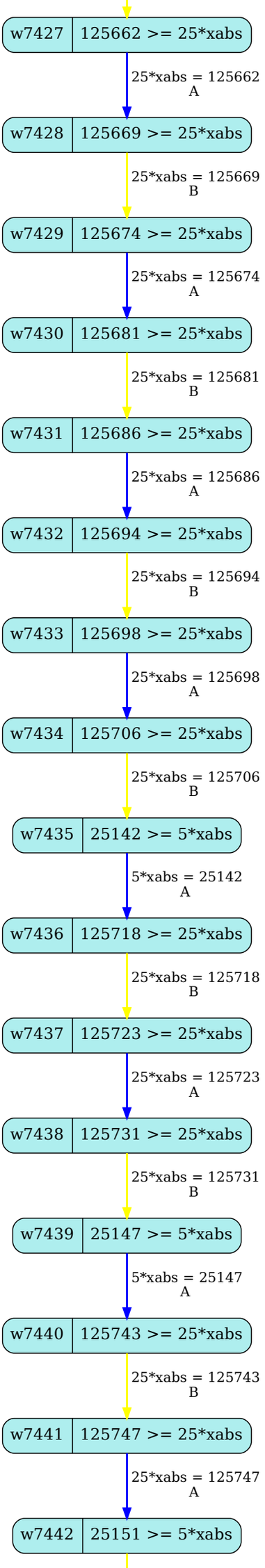
w7427
125662 >= 25*xabs
25*xabs = 125662
A
w7428
125669 >= 25*xabs
25*xabs = 125669
B
w7429
125674 >= 25*xabs
25*xabs = 125674
A
w7430
125681 >= 25*xabs
25*xabs = 125681
B
w7431
125686 >= 25*xabs
25*xabs = 125686
A
w7432
125694 >= 25*xabs
25*xabs = 125694
B
w7433
125698 >= 25*xabs
25*xabs = 125698
A
w7434
125706 >= 25*xabs
25*xabs = 125706
B
w7435
25142 >= 5*xabs
5*xabs = 25142
A
w7436
125718 >= 25*xabs
25*xabs = 125718
B
w7437
125723 >= 25*xabs
25*xabs = 125723
A
w7438
125731 >= 25*xabs
25*xabs = 125731
B
w7439
25147 >= 5*xabs
5*xabs = 25147
A
w7440
125743 >= 25*xabs
25*xabs = 125743
B
w7441
125747 >= 25*xabs
25*xabs = 125747
A
w7442
25151 >= 5*xabs

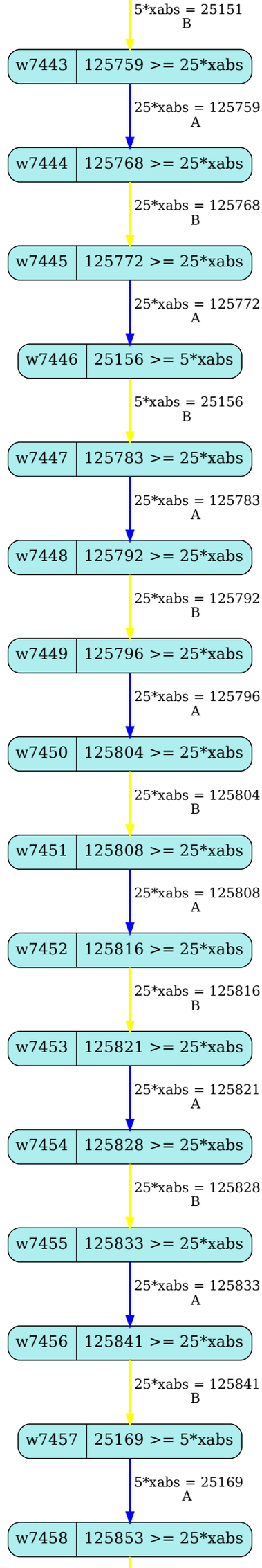
5*xabs = 25151
B
w7443
125759 >= 25*xabs
25*xabs = 125759
A
w7444
125768 >= 25*xabs
25*xabs = 125768
B
w7445
125772 >= 25*xabs
25*xabs = 125772
A
w7446
25156 >= 5*xabs
5*xabs = 25156
B
w7447
125783 >= 25*xabs
25*xabs = 125783
A
w7448
125792 >= 25*xabs
25*xabs = 125792
B
w7449
125796 >= 25*xabs
25*xabs = 125796
A
w7450
125804 >= 25*xabs
25*xabs = 125804
B
w7451
125808 >= 25*xabs
25*xabs = 125808
A
w7452
125816 >= 25*xabs
25*xabs = 125816
B
w7453
125821 >= 25*xabs
25*xabs = 125821
A
w7454
125828 >= 25*xabs
25*xabs = 125828
B
w7455
125833 >= 25*xabs
25*xabs = 125833
A
w7456
125841 >= 25*xabs
25*xabs = 125841
B
w7457
25169 >= 5*xabs
5*xabs = 25169
A
w7458
125853 >= 25*xabs

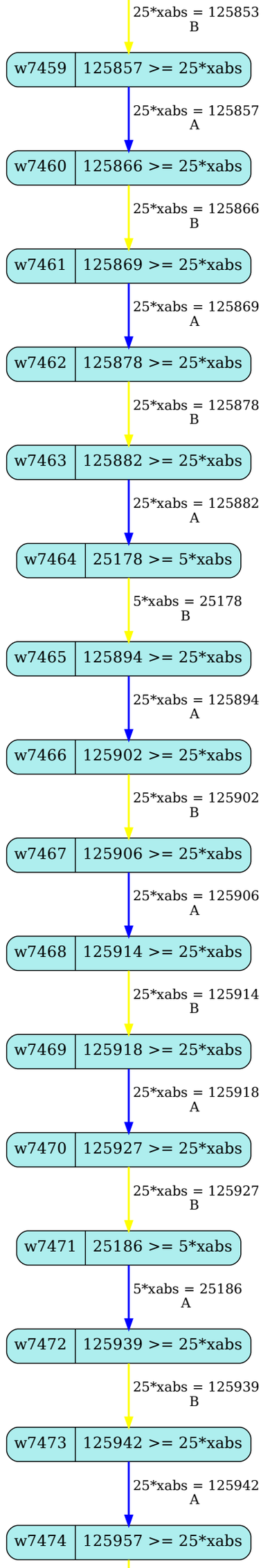
25*xabs = 125853
B
w7459
125857 >= 25*xabs
25*xabs = 125857
A
w7460
125866 >= 25*xabs
25*xabs = 125866
B
w7461
125869 >= 25*xabs
25*xabs = 125869
A
w7462
125878 >= 25*xabs
25*xabs = 125878
B
w7463
125882 >= 25*xabs
25*xabs = 125882
A
w7464
25178 >= 5*xabs
5*xabs = 25178
B
w7465
125894 >= 25*xabs
25*xabs = 125894
A
w7466
125902 >= 25*xabs
25*xabs = 125902
B
w7467
125906 >= 25*xabs
25*xabs = 125906
A
w7468
125914 >= 25*xabs
25*xabs = 125914
B
w7469
125918 >= 25*xabs
25*xabs = 125918
A
w7470
125927 >= 25*xabs
25*xabs = 125927
B
w7471
25186 >= 5*xabs
5*xabs = 25186
A
w7472
125939 >= 25*xabs
25*xabs = 125939
B
w7473
125942 >= 25*xabs
25*xabs = 125942
A
w7474
125957 >= 25*xabs

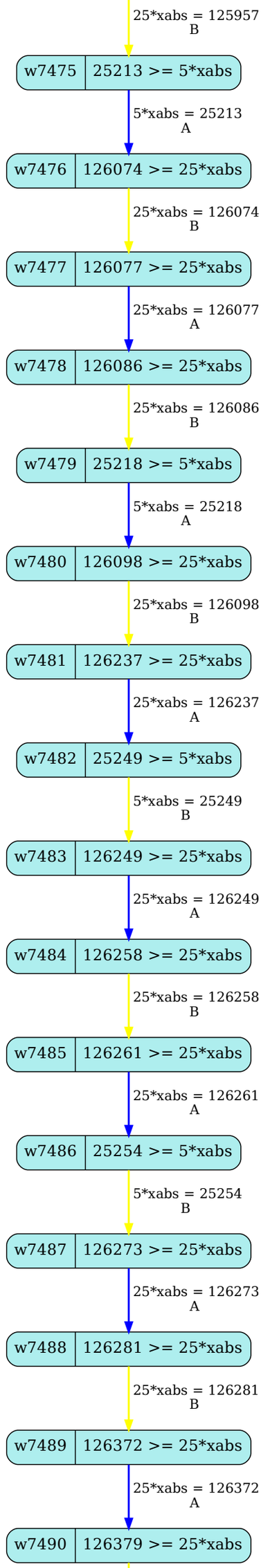
25*xabs = 125957
B
w7475
25213 >= 5*xabs
5*xabs = 25213
A
w7476
126074 >= 25*xabs
25*xabs = 126074
B
w7477
126077 >= 25*xabs
25*xabs = 126077
A
w7478
126086 >= 25*xabs
25*xabs = 126086
B
w7479
25218 >= 5*xabs
5*xabs = 25218
A
w7480
126098 >= 25*xabs
25*xabs = 126098
B
w7481
126237 >= 25*xabs
25*xabs = 126237
A
w7482
25249 >= 5*xabs
5*xabs = 25249
B
w7483
126249 >= 25*xabs
25*xabs = 126249
A
w7484
126258 >= 25*xabs
25*xabs = 126258
B
w7485
126261 >= 25*xabs
25*xabs = 126261
A
w7486
25254 >= 5*xabs
5*xabs = 25254
B
w7487
126273 >= 25*xabs
25*xabs = 126273
A
w7488
126281 >= 25*xabs
25*xabs = 126281
B
w7489
126372 >= 25*xabs
25*xabs = 126372
A
w7490
126379 >= 25*xabs

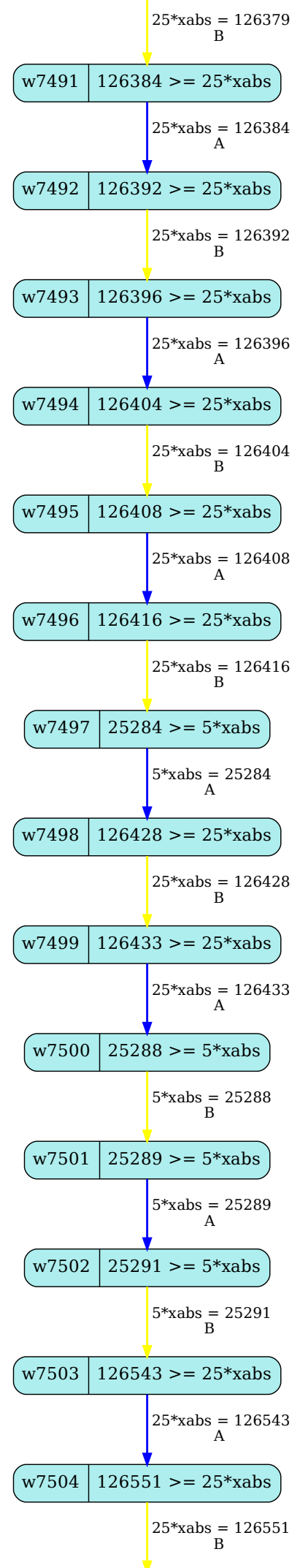
25*xabs = 126379
B
w7491
126384 >= 25*xabs
25*xabs = 126384
A
w7492
126392 >= 25*xabs
25*xabs = 126392
B
w7493
126396 >= 25*xabs
25*xabs = 126396
A
w7494
126404 >= 25*xabs
25*xabs = 126404
B
w7495
126408 >= 25*xabs
25*xabs = 126408
A
w7496
126416 >= 25*xabs
25*xabs = 126416
B
w7497
25284 >= 5*xabs
5*xabs = 25284
A
w7498
126428 >= 25*xabs
25*xabs = 126428
B
w7499
126433 >= 25*xabs
25*xabs = 126433
A
w7500
25288 >= 5*xabs
5*xabs = 25288
B
w7501
25289 >= 5*xabs
5*xabs = 25289
A
w7502
25291 >= 5*xabs
5*xabs = 25291
B
w7503
126543 >= 25*xabs
25*xabs = 126543
A
w7504
126551 >= 25*xabs
25*xabs = 126551
B

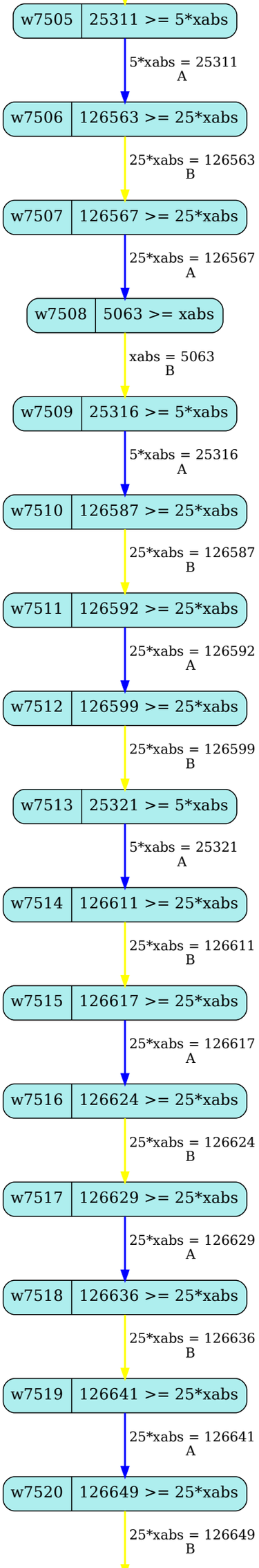
w7505
25311 >= 5*xabs
5*xabs = 25311
A
w7506
126563 >= 25*xabs
25*xabs = 126563
B
w7507
126567 >= 25*xabs
25*xabs = 126567
A
w7508
5063 >= xabs
xabs = 5063
B
w7509
25316 >= 5*xabs
5*xabs = 25316
A
w7510
126587 >= 25*xabs
25*xabs = 126587
B
w7511
126592 >= 25*xabs
25*xabs = 126592
A
w7512
126599 >= 25*xabs
25*xabs = 126599
B
w7513
25321 >= 5*xabs
5*xabs = 25321
A
w7514
126611 >= 25*xabs
25*xabs = 126611
B
w7515
126617 >= 25*xabs
25*xabs = 126617
A
w7516
126624 >= 25*xabs
25*xabs = 126624
B
w7517
126629 >= 25*xabs
25*xabs = 126629
A
w7518
126636 >= 25*xabs
25*xabs = 126636
B
w7519
126641 >= 25*xabs
25*xabs = 126641
A
w7520
126649 >= 25*xabs
25*xabs = 126649
B

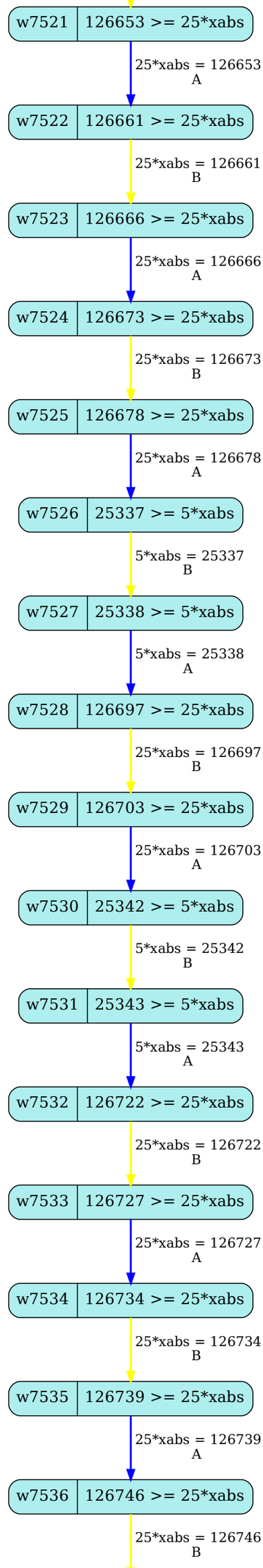
w7521
126653 >= 25*xabs
25*xabs = 126653
A
w7522
126661 >= 25*xabs
25*xabs = 126661
B
w7523
126666 >= 25*xabs
25*xabs = 126666
A
w7524
126673 >= 25*xabs
25*xabs = 126673
B
w7525
126678 >= 25*xabs
25*xabs = 126678
A
w7526
25337 >= 5*xabs
5*xabs = 25337
B
w7527
25338 >= 5*xabs
5*xabs = 25338
A
w7528
126697 >= 25*xabs
25*xabs = 126697
B
w7529
126703 >= 25*xabs
25*xabs = 126703
A
w7530
25342 >= 5*xabs
5*xabs = 25342
B
w7531
25343 >= 5*xabs
5*xabs = 25343
A
w7532
126722 >= 25*xabs
25*xabs = 126722
B
w7533
126727 >= 25*xabs
25*xabs = 126727
A
w7534
126734 >= 25*xabs
25*xabs = 126734
B
w7535
126739 >= 25*xabs
25*xabs = 126739
A
w7536
126746 >= 25*xabs
25*xabs = 126746
B

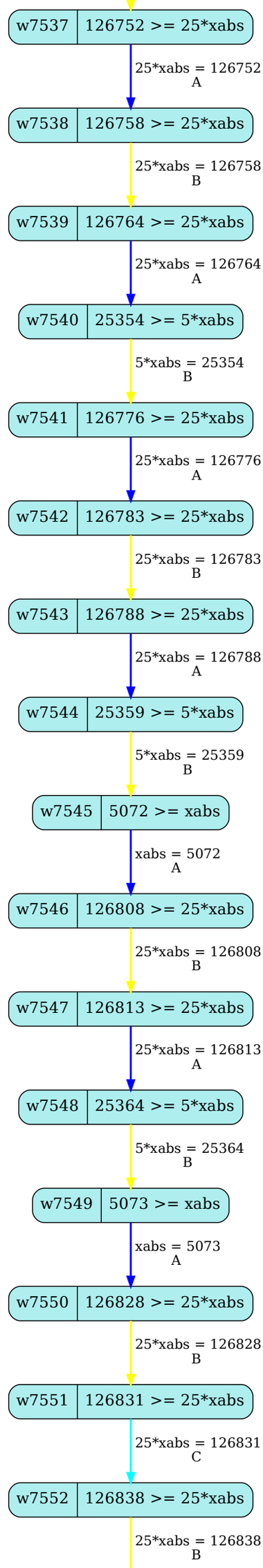
w7537
126752 >= 25*xabs
25*xabs = 126752
A
w7538
126758 >= 25*xabs
25*xabs = 126758
B
w7539
126764 >= 25*xabs
25*xabs = 126764
A
w7540
25354 >= 5*xabs
5*xabs = 25354
B
w7541
126776 >= 25*xabs
25*xabs = 126776
A
w7542
126783 >= 25*xabs
25*xabs = 126783
B
w7543
126788 >= 25*xabs
25*xabs = 126788
A
w7544
25359 >= 5*xabs
5*xabs = 25359
B
w7545
5072 >= xabs
xabs = 5072
A
w7546
126808 >= 25*xabs
25*xabs = 126808
B
w7547
126813 >= 25*xabs
25*xabs = 126813
A
w7548
25364 >= 5*xabs
5*xabs = 25364
B
w7549
5073 >= xabs
xabs = 5073
A
w7550
126828 >= 25*xabs
25*xabs = 126828
B
w7551
126831 >= 25*xabs
25*xabs = 126831
C
w7552
126838 >= 25*xabs
25*xabs = 126838
B

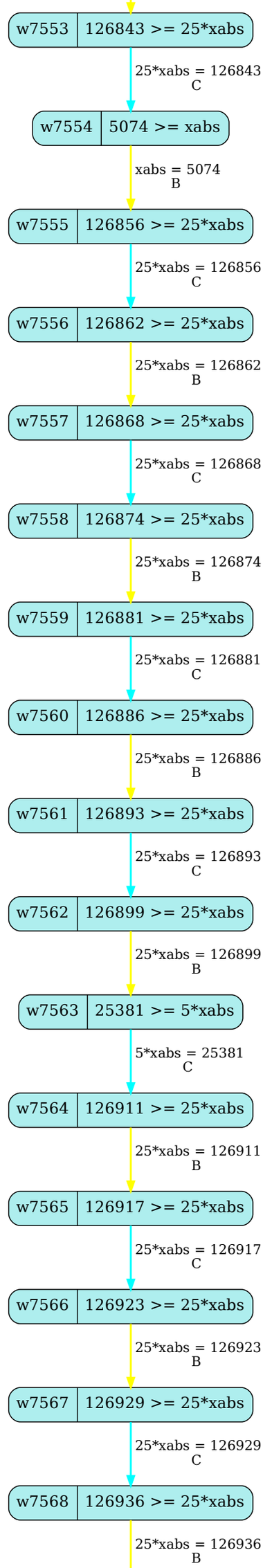
w7553
126843 >= 25*xabs
25*xabs = 126843
C
w7554
5074 >= xabs
xabs = 5074
B
w7555
126856 >= 25*xabs
25*xabs = 126856
C
w7556
126862 >= 25*xabs
25*xabs = 126862
B
w7557
126868 >= 25*xabs
25*xabs = 126868
C
w7558
126874 >= 25*xabs
25*xabs = 126874
B
w7559
126881 >= 25*xabs
25*xabs = 126881
C
w7560
126886 >= 25*xabs
25*xabs = 126886
B
w7561
126893 >= 25*xabs
25*xabs = 126893
C
w7562
126899 >= 25*xabs
25*xabs = 126899
B
w7563
25381 >= 5*xabs
5*xabs = 25381
C
w7564
126911 >= 25*xabs
25*xabs = 126911
B
w7565
126917 >= 25*xabs
25*xabs = 126917
C
w7566
126923 >= 25*xabs
25*xabs = 126923
B
w7567
126929 >= 25*xabs
25*xabs = 126929
C
w7568
126936 >= 25*xabs
25*xabs = 126936
B

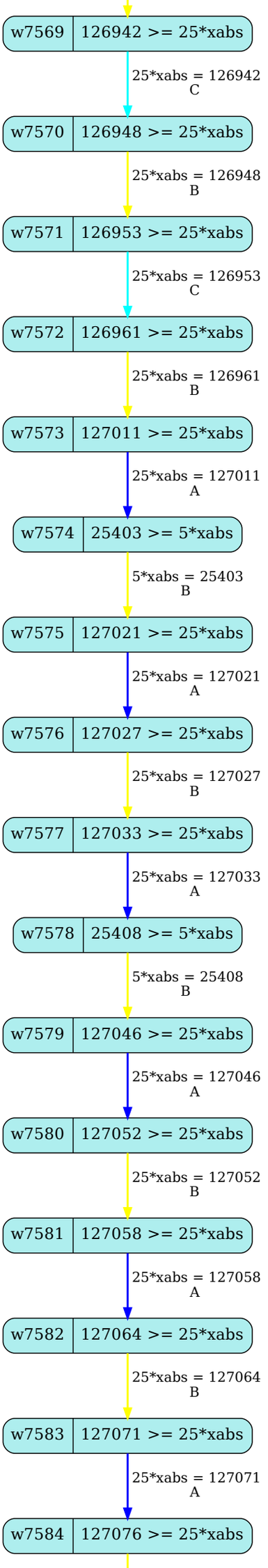
w7569
126942 >= 25*xabs
25*xabs = 126942
C
w7570
126948 >= 25*xabs
25*xabs = 126948
B
w7571
126953 >= 25*xabs
25*xabs = 126953
C
w7572
126961 >= 25*xabs
25*xabs = 126961
B
w7573
127011 >= 25*xabs
25*xabs = 127011
A
w7574
25403 >= 5*xabs
5*xabs = 25403
B
w7575
127021 >= 25*xabs
25*xabs = 127021
A
w7576
127027 >= 25*xabs
25*xabs = 127027
B
w7577
127033 >= 25*xabs
25*xabs = 127033
A
w7578
25408 >= 5*xabs
5*xabs = 25408
B
w7579
127046 >= 25*xabs
25*xabs = 127046
A
w7580
127052 >= 25*xabs
25*xabs = 127052
B
w7581
127058 >= 25*xabs
25*xabs = 127058
A
w7582
127064 >= 25*xabs
25*xabs = 127064
B
w7583
127071 >= 25*xabs
25*xabs = 127071
A
w7584
127076 >= 25*xabs

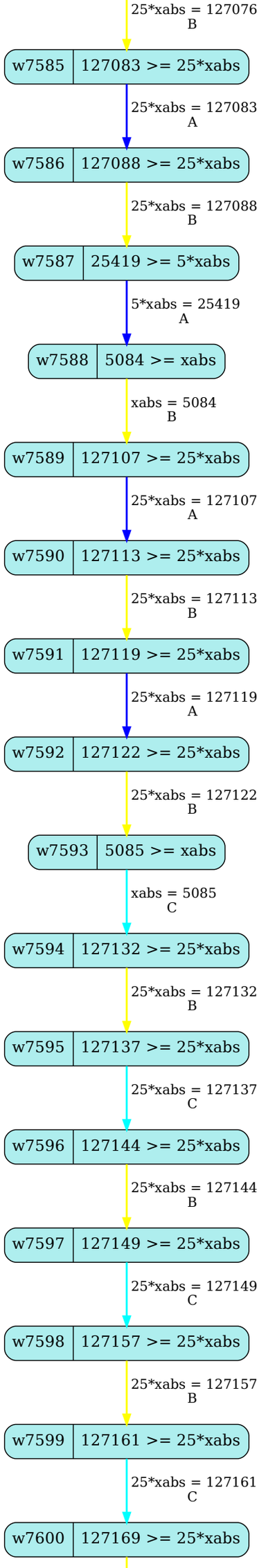
25*xabs = 127076
B
w7585
127083 >= 25*xabs
25*xabs = 127083
A
w7586
127088 >= 25*xabs
25*xabs = 127088
B
w7587
25419 >= 5*xabs
5*xabs = 25419
A
w7588
5084 >= xabs
xabs = 5084
B
w7589
127107 >= 25*xabs
25*xabs = 127107
A
w7590
127113 >= 25*xabs
25*xabs = 127113
B
w7591
127119 >= 25*xabs
25*xabs = 127119
A
w7592
127122 >= 25*xabs
25*xabs = 127122
B
w7593
5085 >= xabs
xabs = 5085
C
w7594
127132 >= 25*xabs
25*xabs = 127132
B
w7595
127137 >= 25*xabs
25*xabs = 127137
C
w7596
127144 >= 25*xabs
25*xabs = 127144
B
w7597
127149 >= 25*xabs
25*xabs = 127149
C
w7598
127157 >= 25*xabs
25*xabs = 127157
B
w7599
127161 >= 25*xabs
25*xabs = 127161
C
w7600
127169 >= 25*xabs

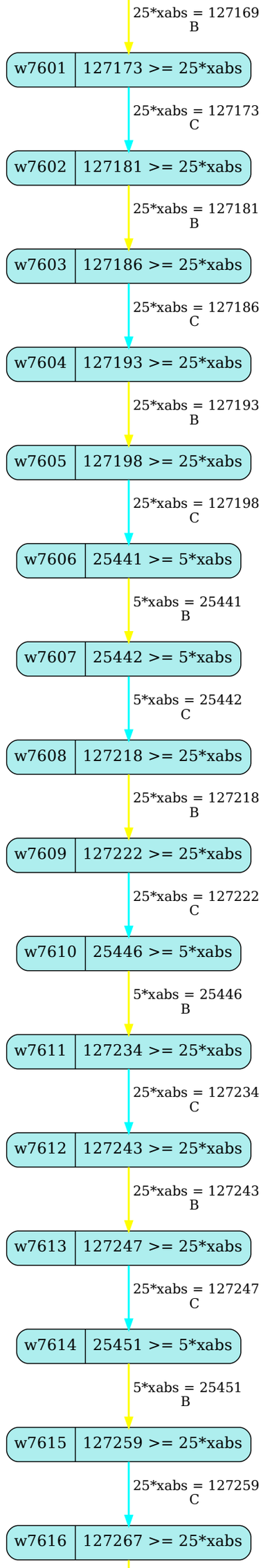
25*xabs = 127169
B
w7601
127173 >= 25*xabs
25*xabs = 127173
C
w7602
127181 >= 25*xabs
25*xabs = 127181
B
w7603
127186 >= 25*xabs
25*xabs = 127186
C
w7604
127193 >= 25*xabs
25*xabs = 127193
B
w7605
127198 >= 25*xabs
25*xabs = 127198
C
w7606
25441 >= 5*xabs
5*xabs = 25441
B
w7607
25442 >= 5*xabs
5*xabs = 25442
C
w7608
127218 >= 25*xabs
25*xabs = 127218
B
w7609
127222 >= 25*xabs
25*xabs = 127222
C
w7610
25446 >= 5*xabs
5*xabs = 25446
B
w7611
127234 >= 25*xabs
25*xabs = 127234
C
w7612
127243 >= 25*xabs
25*xabs = 127243
B
w7613
127247 >= 25*xabs
25*xabs = 127247
C
w7614
25451 >= 5*xabs
5*xabs = 25451
B
w7615
127259 >= 25*xabs
25*xabs = 127259
C
w7616
127267 >= 25*xabs

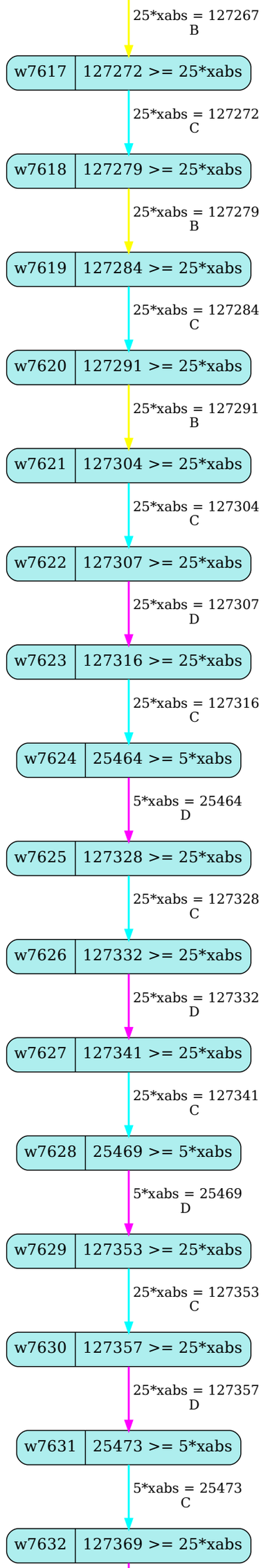
25*xabs = 127267
B
w7617
127272 >= 25*xabs
25*xabs = 127272
C
w7618
127279 >= 25*xabs
25*xabs = 127279
B
w7619
127284 >= 25*xabs
25*xabs = 127284
C
w7620
127291 >= 25*xabs
25*xabs = 127291
B
w7621
127304 >= 25*xabs
25*xabs = 127304
C
w7622
127307 >= 25*xabs
25*xabs = 127307
D
w7623
127316 >= 25*xabs
25*xabs = 127316
C
w7624
25464 >= 5*xabs
5*xabs = 25464
D
w7625
127328 >= 25*xabs
25*xabs = 127328
C
w7626
127332 >= 25*xabs
25*xabs = 127332
D
w7627
127341 >= 25*xabs
25*xabs = 127341
C
w7628
25469 >= 5*xabs
5*xabs = 25469
D
w7629
127353 >= 25*xabs
25*xabs = 127353
C
w7630
127357 >= 25*xabs
25*xabs = 127357
D
w7631
25473 >= 5*xabs
5*xabs = 25473
C
w7632
127369 >= 25*xabs

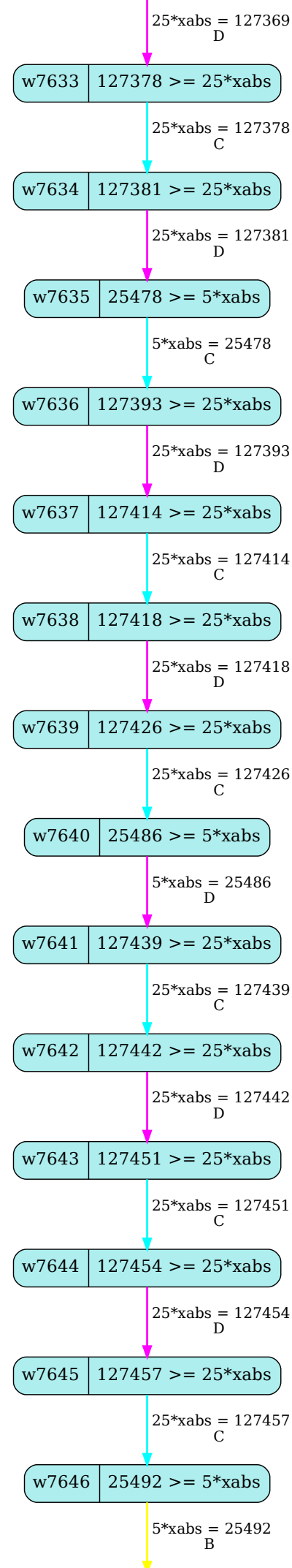
25*xabs = 127369
D
w7633
127378 >= 25*xabs
25*xabs = 127378
C
w7634
127381 >= 25*xabs
25*xabs = 127381
D
w7635
25478 >= 5*xabs
5*xabs = 25478
C
w7636
127393 >= 25*xabs
25*xabs = 127393
D
w7637
127414 >= 25*xabs
25*xabs = 127414
C
w7638
127418 >= 25*xabs
25*xabs = 127418
D
w7639
127426 >= 25*xabs
25*xabs = 127426
C
w7640
25486 >= 5*xabs
5*xabs = 25486
D
w7641
127439 >= 25*xabs
25*xabs = 127439
C
w7642
127442 >= 25*xabs
25*xabs = 127442
D
w7643
127451 >= 25*xabs
25*xabs = 127451
C
w7644
127454 >= 25*xabs
25*xabs = 127454
D
w7645
127457 >= 25*xabs
25*xabs = 127457
C
w7646
25492 >= 5*xabs
5*xabs = 25492
B

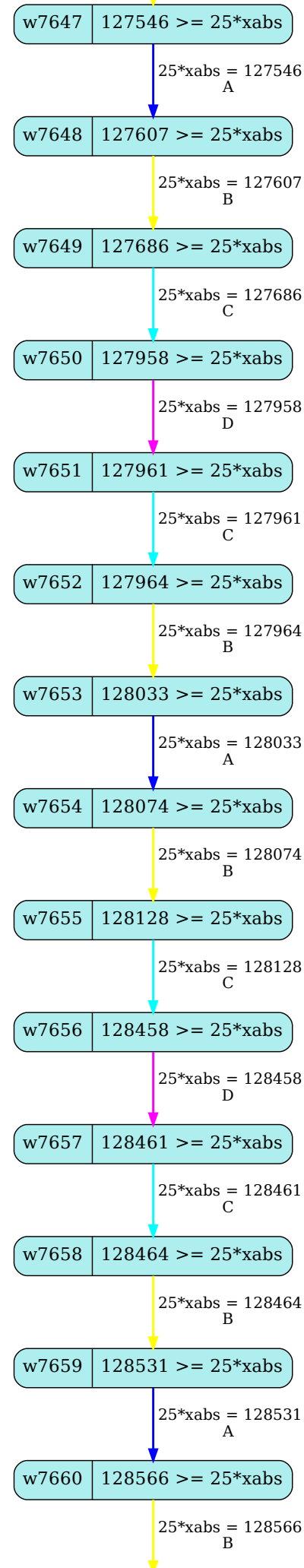
w7647
127546 >= 25*xabs
25*xabs = 127546
A
w7648
127607 >= 25*xabs
25*xabs = 127607
B
w7649
127686 >= 25*xabs
25*xabs = 127686
C
w7650
127958 >= 25*xabs
25*xabs = 127958
D
w7651
127961 >= 25*xabs
25*xabs = 127961
C
w7652
127964 >= 25*xabs
25*xabs = 127964
B
w7653
128033 >= 25*xabs
25*xabs = 128033
A
w7654
128074 >= 25*xabs
25*xabs = 128074
B
w7655
128128 >= 25*xabs
25*xabs = 128128
C
w7656
128458 >= 25*xabs
25*xabs = 128458
D
w7657
128461 >= 25*xabs
25*xabs = 128461
C
w7658
128464 >= 25*xabs
25*xabs = 128464
B
w7659
128531 >= 25*xabs
25*xabs = 128531
A
w7660
128566 >= 25*xabs
25*xabs = 128566
B

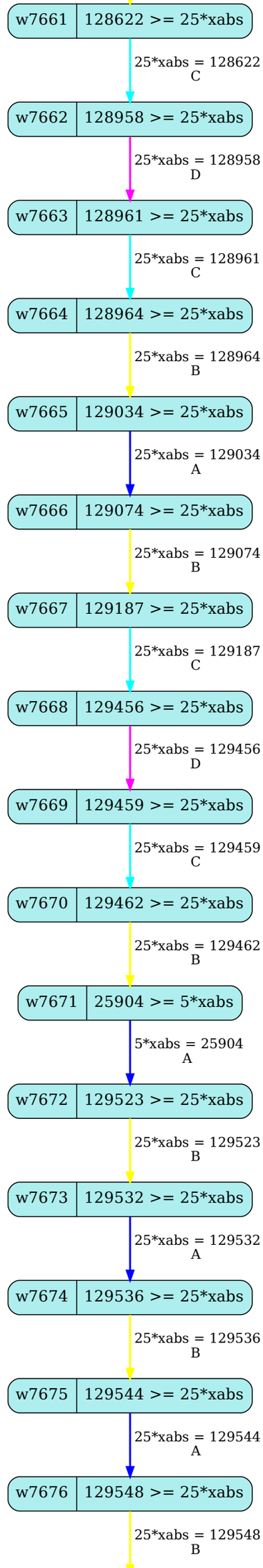
w7661
128622 >= 25*xabs
25*xabs = 128622
C
w7662
128958 >= 25*xabs
25*xabs = 128958
D
w7663
128961 >= 25*xabs
25*xabs = 128961
C
w7664
128964 >= 25*xabs
25*xabs = 128964
B
w7665
129034 >= 25*xabs
25*xabs = 129034
A
w7666
129074 >= 25*xabs
25*xabs = 129074
B
w7667
129187 >= 25*xabs
25*xabs = 129187
C
w7668
129456 >= 25*xabs
25*xabs = 129456
D
w7669
129459 >= 25*xabs
25*xabs = 129459
C
w7670
129462 >= 25*xabs
25*xabs = 129462
B
w7671
25904 >= 5*xabs
5*xabs = 25904
A
w7672
129523 >= 25*xabs
25*xabs = 129523
B
w7673
129532 >= 25*xabs
25*xabs = 129532
A
w7674
129536 >= 25*xabs
25*xabs = 129536
B
w7675
129544 >= 25*xabs
25*xabs = 129544
A
w7676
129548 >= 25*xabs
25*xabs = 129548
B

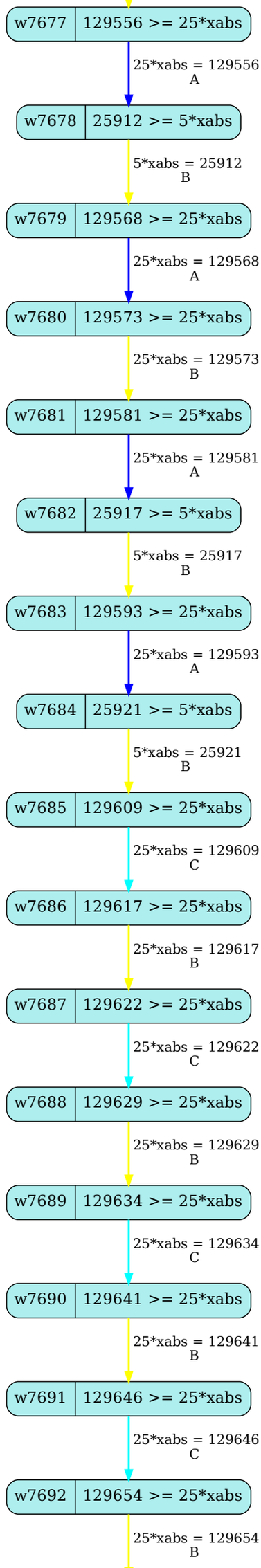
w7677
129556 >= 25*xabs
25*xabs = 129556
A
w7678
25912 >= 5*xabs
5*xabs = 25912
B
w7679
129568 >= 25*xabs
25*xabs = 129568
A
w7680
129573 >= 25*xabs
25*xabs = 129573
B
w7681
129581 >= 25*xabs
25*xabs = 129581
A
w7682
25917 >= 5*xabs
5*xabs = 25917
B
w7683
129593 >= 25*xabs
25*xabs = 129593
A
w7684
25921 >= 5*xabs
5*xabs = 25921
B
w7685
129609 >= 25*xabs
25*xabs = 129609
C
w7686
129617 >= 25*xabs
25*xabs = 129617
B
w7687
129622 >= 25*xabs
25*xabs = 129622
C
w7688
129629 >= 25*xabs
25*xabs = 129629
B
w7689
129634 >= 25*xabs
25*xabs = 129634
C
w7690
129641 >= 25*xabs
25*xabs = 129641
B
w7691
129646 >= 25*xabs
25*xabs = 129646
C
w7692
129654 >= 25*xabs
25*xabs = 129654
B

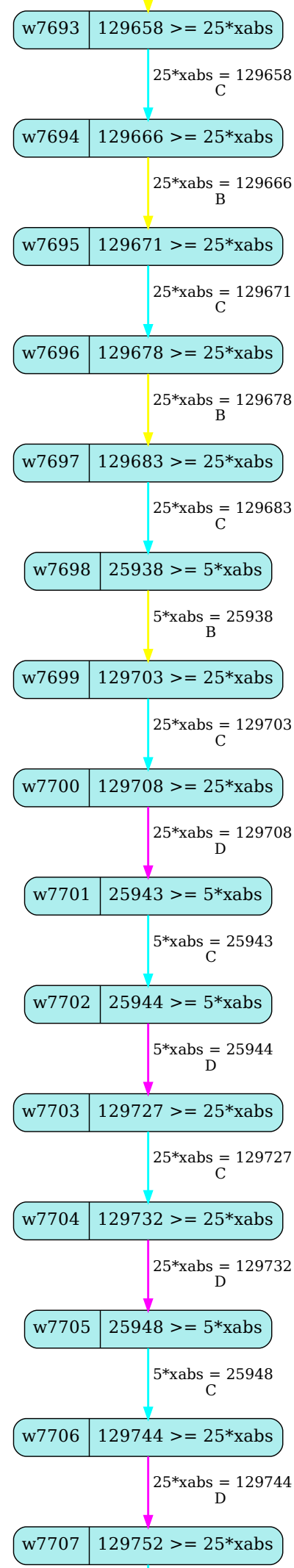
w7693
129658 >= 25*xabs
25*xabs = 129658
C
w7694
129666 >= 25*xabs
25*xabs = 129666
B
w7695
129671 >= 25*xabs
25*xabs = 129671
C
w7696
129678 >= 25*xabs
25*xabs = 129678
B
w7697
129683 >= 25*xabs
25*xabs = 129683
C
w7698
25938 >= 5*xabs
5*xabs = 25938
B
w7699
129703 >= 25*xabs
25*xabs = 129703
C
w7700
129708 >= 25*xabs
25*xabs = 129708
D
w7701
25943 >= 5*xabs
5*xabs = 25943
C
w7702
25944 >= 5*xabs
5*xabs = 25944
D
w7703
129727 >= 25*xabs
25*xabs = 129727
C
w7704
129732 >= 25*xabs
25*xabs = 129732
D
w7705
25948 >= 5*xabs
5*xabs = 25948
C
w7706
129744 >= 25*xabs
25*xabs = 129744
D
w7707
129752 >= 25*xabs

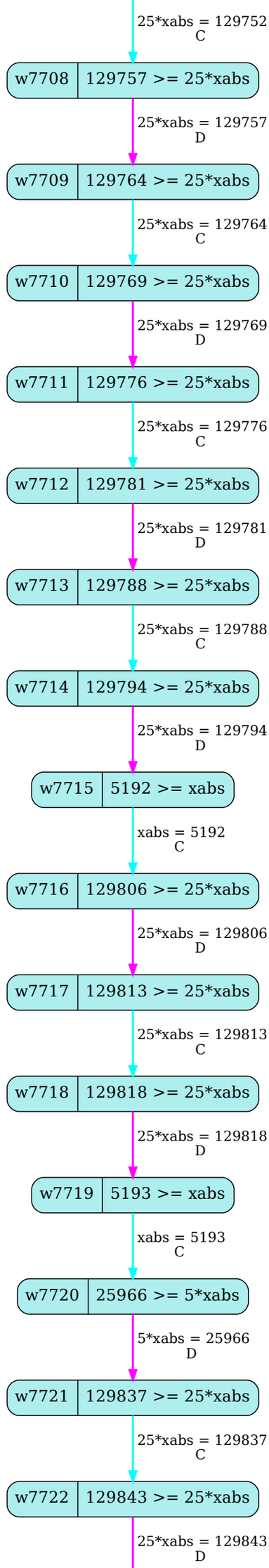
25*xabs = 129752
C
w7708
129757 >= 25*xabs
25*xabs = 129757
D
w7709
129764 >= 25*xabs
25*xabs = 129764
C
w7710
129769 >= 25*xabs
25*xabs = 129769
D
w7711
129776 >= 25*xabs
25*xabs = 129776
C
w7712
129781 >= 25*xabs
25*xabs = 129781
D
w7713
129788 >= 25*xabs
25*xabs = 129788
C
w7714
129794 >= 25*xabs
25*xabs = 129794
D
w7715
5192 >= xabs
xabs = 5192
C
w7716
129806 >= 25*xabs
25*xabs = 129806
D
w7717
129813 >= 25*xabs
25*xabs = 129813
C
w7718
129818 >= 25*xabs
25*xabs = 129818
D
w7719
5193 >= xabs
xabs = 5193
C
w7720
25966 >= 5*xabs
5*xabs = 25966
D
w7721
129837 >= 25*xabs
25*xabs = 129837
C
w7722
129843 >= 25*xabs
25*xabs = 129843
D

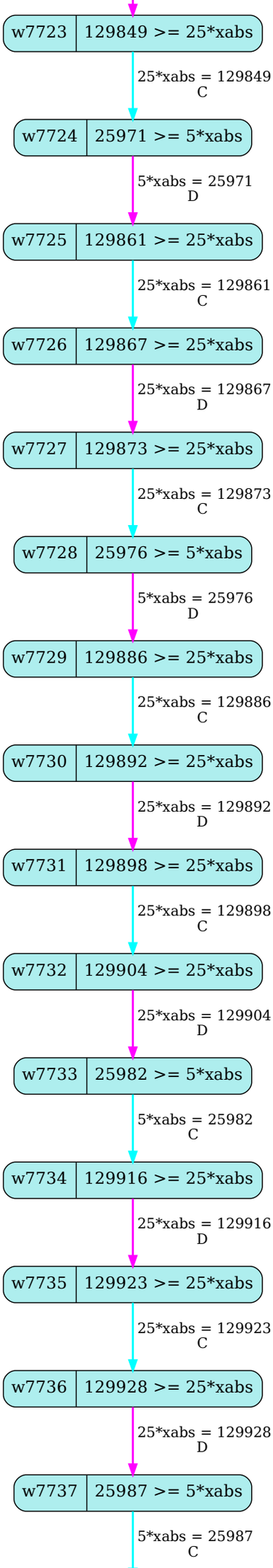
w7723
129849 >= 25*xabs
25*xabs = 129849
C
w7724
25971 >= 5*xabs
5*xabs = 25971
D
w7725
129861 >= 25*xabs
25*xabs = 129861
C
w7726
129867 >= 25*xabs
25*xabs = 129867
D
w7727
129873 >= 25*xabs
25*xabs = 129873
C
w7728
25976 >= 5*xabs
5*xabs = 25976
D
w7729
129886 >= 25*xabs
25*xabs = 129886
C
w7730
129892 >= 25*xabs
25*xabs = 129892
D
w7731
129898 >= 25*xabs
25*xabs = 129898
C
w7732
129904 >= 25*xabs
25*xabs = 129904
D
w7733
25982 >= 5*xabs
5*xabs = 25982
C
w7734
129916 >= 25*xabs
25*xabs = 129916
D
w7735
129923 >= 25*xabs
25*xabs = 129923
C
w7736
129928 >= 25*xabs
25*xabs = 129928
D
w7737
25987 >= 5*xabs
5*xabs = 25987
C

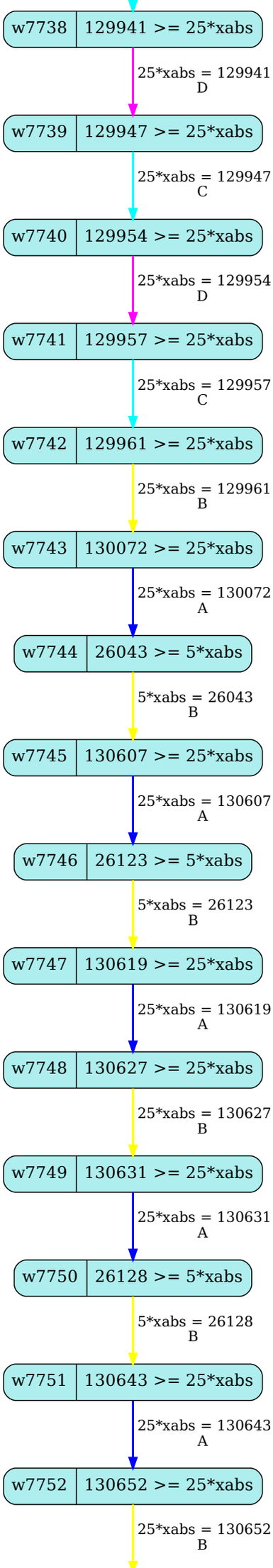
w7738
129941 >= 25*xabs
25*xabs = 129941
D
w7739
129947 >= 25*xabs
25*xabs = 129947
C
w7740
129954 >= 25*xabs
25*xabs = 129954
D
w7741
129957 >= 25*xabs
25*xabs = 129957
C
w7742
129961 >= 25*xabs
25*xabs = 129961
B
w7743
130072 >= 25*xabs
25*xabs = 130072
A
w7744
26043 >= 5*xabs
5*xabs = 26043
B
w7745
130607 >= 25*xabs
25*xabs = 130607
A
w7746
26123 >= 5*xabs
5*xabs = 26123
B
w7747
130619 >= 25*xabs
25*xabs = 130619
A
w7748
130627 >= 25*xabs
25*xabs = 130627
B
w7749
130631 >= 25*xabs
25*xabs = 130631
A
w7750
26128 >= 5*xabs
5*xabs = 26128
B
w7751
130643 >= 25*xabs
25*xabs = 130643
A
w7752
130652 >= 25*xabs
25*xabs = 130652
B

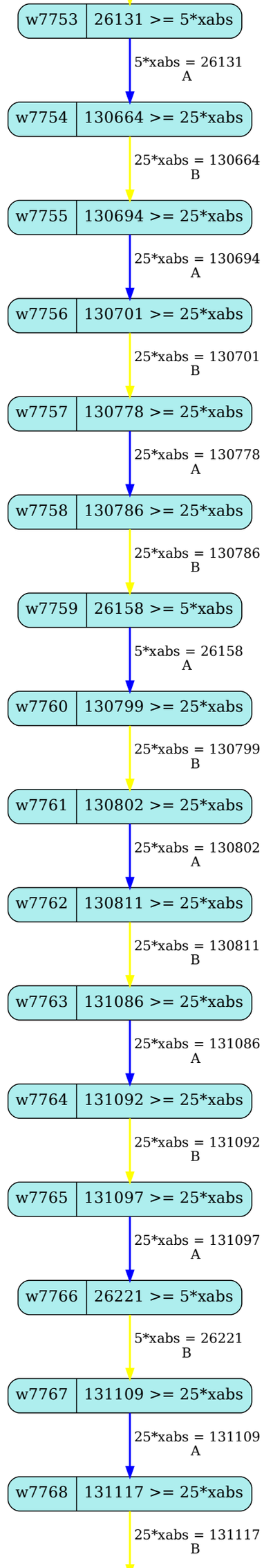
w7753
26131 >= 5*xabs
5*xabs = 26131
A
w7754
130664 >= 25*xabs
25*xabs = 130664
B
w7755
130694 >= 25*xabs
25*xabs = 130694
A
w7756
130701 >= 25*xabs
25*xabs = 130701
B
w7757
130778 >= 25*xabs
25*xabs = 130778
A
w7758
130786 >= 25*xabs
25*xabs = 130786
B
w7759
26158 >= 5*xabs
5*xabs = 26158
A
w7760
130799 >= 25*xabs
25*xabs = 130799
B
w7761
130802 >= 25*xabs
25*xabs = 130802
A
w7762
130811 >= 25*xabs
25*xabs = 130811
B
w7763
131086 >= 25*xabs
25*xabs = 131086
A
w7764
131092 >= 25*xabs
25*xabs = 131092
B
w7765
131097 >= 25*xabs
25*xabs = 131097
A
w7766
26221 >= 5*xabs
5*xabs = 26221
B
w7767
131109 >= 25*xabs
25*xabs = 131109
A
w7768
131117 >= 25*xabs
25*xabs = 131117
B

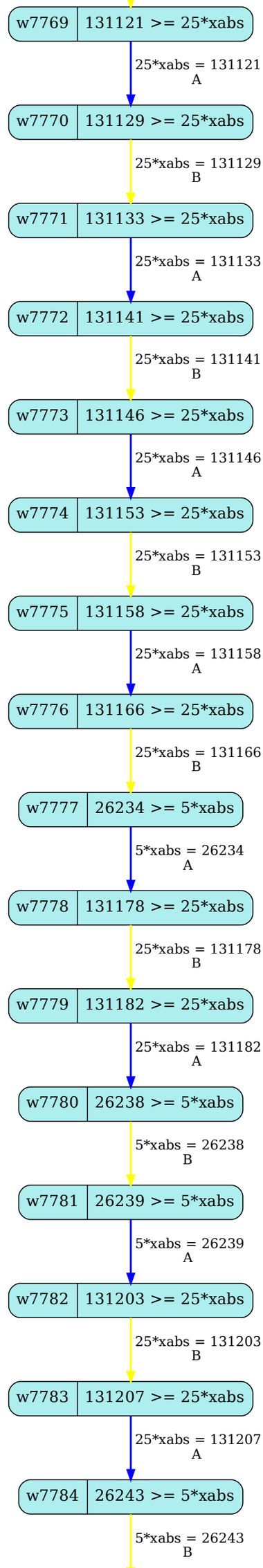
w7769
131121 >= 25*xabs
25*xabs = 131121
A
w7770
131129 >= 25*xabs
25*xabs = 131129
B
w7771
131133 >= 25*xabs
25*xabs = 131133
A
w7772
131141 >= 25*xabs
25*xabs = 131141
B
w7773
131146 >= 25*xabs
25*xabs = 131146
A
w7774
131153 >= 25*xabs
25*xabs = 131153
B
w7775
131158 >= 25*xabs
25*xabs = 131158
A
w7776
131166 >= 25*xabs
25*xabs = 131166
B
w7777
26234 >= 5*xabs
5*xabs = 26234
A
w7778
131178 >= 25*xabs
25*xabs = 131178
B
w7779
131182 >= 25*xabs
25*xabs = 131182
A
w7780
26238 >= 5*xabs
5*xabs = 26238
B
w7781
26239 >= 5*xabs
5*xabs = 26239
A
w7782
131203 >= 25*xabs
25*xabs = 131203
B
w7783
131207 >= 25*xabs
25*xabs = 131207
A
w7784
26243 >= 5*xabs
5*xabs = 26243
B

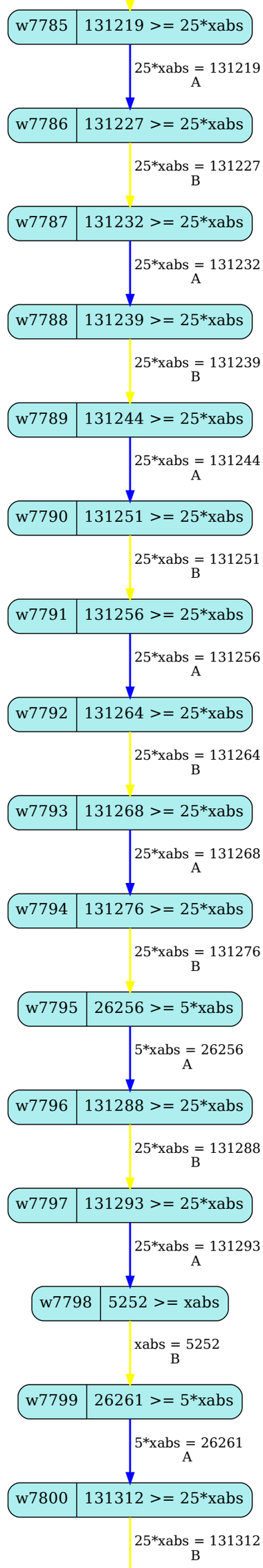
w7785
131219 >= 25*xabs
25*xabs = 131219
A
w7786
131227 >= 25*xabs
25*xabs = 131227
B
w7787
131232 >= 25*xabs
25*xabs = 131232
A
w7788
131239 >= 25*xabs
25*xabs = 131239
B
w7789
131244 >= 25*xabs
25*xabs = 131244
A
w7790
131251 >= 25*xabs
25*xabs = 131251
B
w7791
131256 >= 25*xabs
25*xabs = 131256
A
w7792
131264 >= 25*xabs
25*xabs = 131264
B
w7793
131268 >= 25*xabs
25*xabs = 131268
A
w7794
131276 >= 25*xabs
25*xabs = 131276
B
w7795
26256 >= 5*xabs
5*xabs = 26256
A
w7796
131288 >= 25*xabs
25*xabs = 131288
B
w7797
131293 >= 25*xabs
25*xabs = 131293
A
w7798
5252 >= xabs
xabs = 5252
B
w7799
26261 >= 5*xabs
5*xabs = 26261
A
w7800
131312 >= 25*xabs
25*xabs = 131312
B

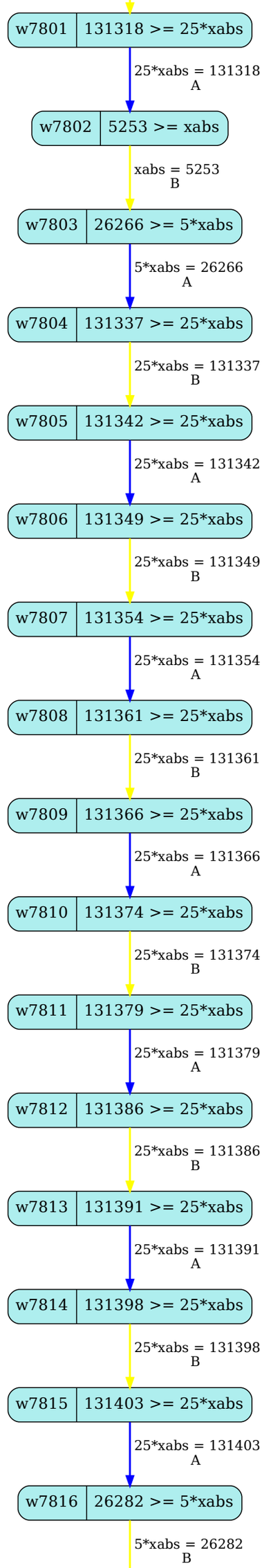
w7801
131318 >= 25*xabs
25*xabs = 131318
A
w7802
5253 >= xabs
xabs = 5253
B
w7803
26266 >= 5*xabs
5*xabs = 26266
A
w7804
131337 >= 25*xabs
25*xabs = 131337
B
w7805
131342 >= 25*xabs
25*xabs = 131342
A
w7806
131349 >= 25*xabs
25*xabs = 131349
B
w7807
131354 >= 25*xabs
25*xabs = 131354
A
w7808
131361 >= 25*xabs
25*xabs = 131361
B
w7809
131366 >= 25*xabs
25*xabs = 131366
A
w7810
131374 >= 25*xabs
25*xabs = 131374
B
w7811
131379 >= 25*xabs
25*xabs = 131379
A
w7812
131386 >= 25*xabs
25*xabs = 131386
B
w7813
131391 >= 25*xabs
25*xabs = 131391
A
w7814
131398 >= 25*xabs
25*xabs = 131398
B
w7815
131403 >= 25*xabs
25*xabs = 131403
A
w7816
26282 >= 5*xabs
5*xabs = 26282
B

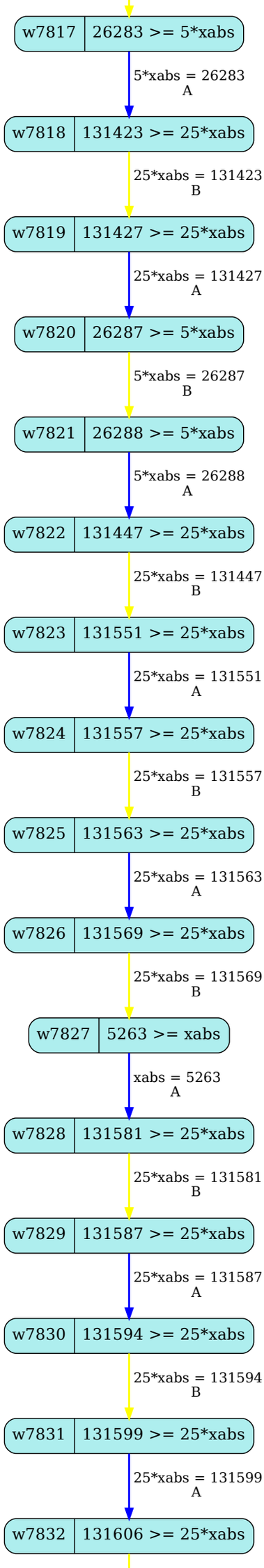
w7817
26283 >= 5*xabs
5*xabs = 26283
A
w7818
131423 >= 25*xabs
25*xabs = 131423
B
w7819
131427 >= 25*xabs
25*xabs = 131427
A
w7820
26287 >= 5*xabs
5*xabs = 26287
B
w7821
26288 >= 5*xabs
5*xabs = 26288
A
w7822
131447 >= 25*xabs
25*xabs = 131447
B
w7823
131551 >= 25*xabs
25*xabs = 131551
A
w7824
131557 >= 25*xabs
25*xabs = 131557
B
w7825
131563 >= 25*xabs
25*xabs = 131563
A
w7826
131569 >= 25*xabs
25*xabs = 131569
B
w7827
5263 >= xabs
xabs = 5263
A
w7828
131581 >= 25*xabs
25*xabs = 131581
B
w7829
131587 >= 25*xabs
25*xabs = 131587
A
w7830
131594 >= 25*xabs
25*xabs = 131594
B
w7831
131599 >= 25*xabs
25*xabs = 131599
A
w7832
131606 >= 25*xabs

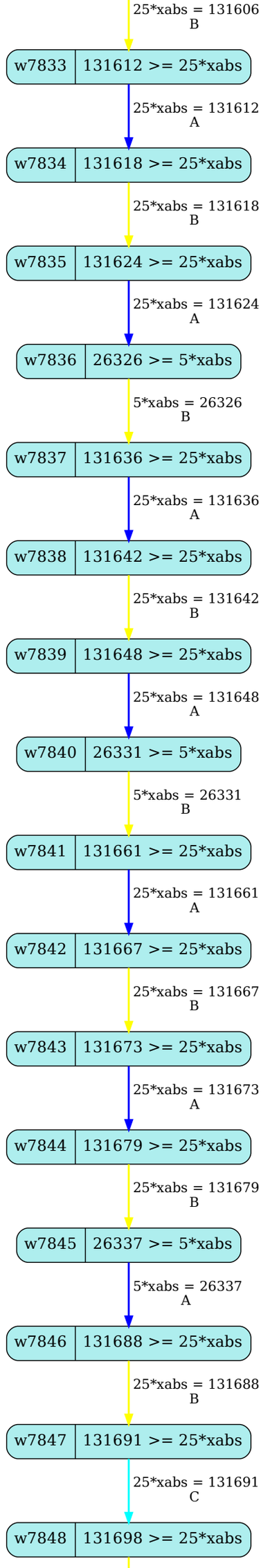
25*xabs = 131606
B
w7833
131612 >= 25*xabs
25*xabs = 131612
A
w7834
131618 >= 25*xabs
25*xabs = 131618
B
w7835
131624 >= 25*xabs
25*xabs = 131624
A
w7836
26326 >= 5*xabs
5*xabs = 26326
B
w7837
131636 >= 25*xabs
25*xabs = 131636
A
w7838
131642 >= 25*xabs
25*xabs = 131642
B
w7839
131648 >= 25*xabs
25*xabs = 131648
A
w7840
26331 >= 5*xabs
5*xabs = 26331
B
w7841
131661 >= 25*xabs
25*xabs = 131661
A
w7842
131667 >= 25*xabs
25*xabs = 131667
B
w7843
131673 >= 25*xabs
25*xabs = 131673
A
w7844
131679 >= 25*xabs
25*xabs = 131679
B
w7845
26337 >= 5*xabs
5*xabs = 26337
A
w7846
131688 >= 25*xabs
25*xabs = 131688
B
w7847
131691 >= 25*xabs
25*xabs = 131691
C
w7848
131698 >= 25*xabs

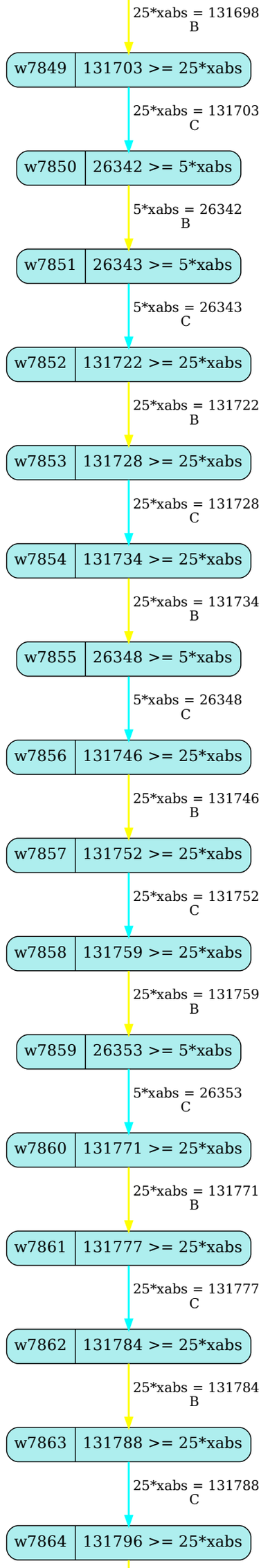
25*xabs = 131698
B
w7849
131703 >= 25*xabs
25*xabs = 131703
C
w7850
26342 >= 5*xabs
5*xabs = 26342
B
w7851
26343 >= 5*xabs
5*xabs = 26343
C
w7852
131722 >= 25*xabs
25*xabs = 131722
B
w7853
131728 >= 25*xabs
25*xabs = 131728
C
w7854
131734 >= 25*xabs
25*xabs = 131734
B
w7855
26348 >= 5*xabs
5*xabs = 26348
C
w7856
131746 >= 25*xabs
25*xabs = 131746
B
w7857
131752 >= 25*xabs
25*xabs = 131752
C
w7858
131759 >= 25*xabs
25*xabs = 131759
B
w7859
26353 >= 5*xabs
5*xabs = 26353
C
w7860
131771 >= 25*xabs
25*xabs = 131771
B
w7861
131777 >= 25*xabs
25*xabs = 131777
C
w7862
131784 >= 25*xabs
25*xabs = 131784
B
w7863
131788 >= 25*xabs
25*xabs = 131788
C
w7864
131796 >= 25*xabs

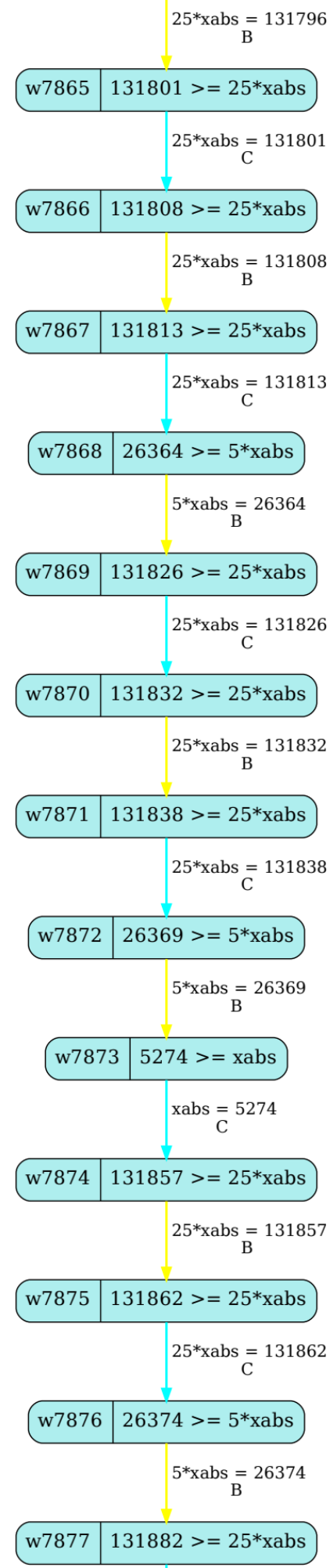
25*xabs = 131796
B
w7865
131801 >= 25*xabs
25*xabs = 131801
C
w7866
131808 >= 25*xabs
25*xabs = 131808
B
w7867
131813 >= 25*xabs
25*xabs = 131813
C
w7868
26364 >= 5*xabs
5*xabs = 26364
B
w7869
131826 >= 25*xabs
25*xabs = 131826
C
w7870
131832 >= 25*xabs
25*xabs = 131832
B
w7871
131838 >= 25*xabs
25*xabs = 131838
C
w7872
26369 >= 5*xabs
5*xabs = 26369
B
w7873
5274 >= xabs
xabs = 5274
C
w7874
131857 >= 25*xabs
25*xabs = 131857
B
w7875
131862 >= 25*xabs
25*xabs = 131862
C
w7876
26374 >= 5*xabs
5*xabs = 26374
B
w7877
131882 >= 25*xabs

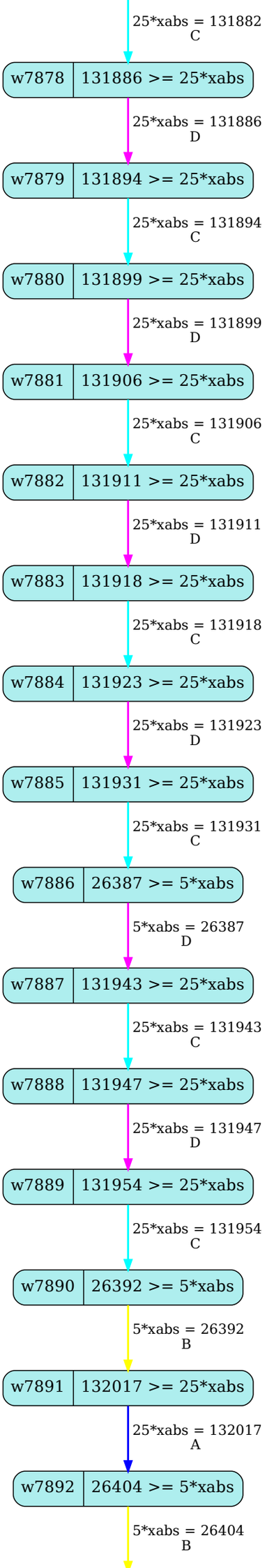
25*xabs = 131882
C
w7878
131886 >= 25*xabs
25*xabs = 131886
D
w7879
131894 >= 25*xabs
25*xabs = 131894
C
w7880
131899 >= 25*xabs
25*xabs = 131899
D
w7881
131906 >= 25*xabs
25*xabs = 131906
C
w7882
131911 >= 25*xabs
25*xabs = 131911
D
w7883
131918 >= 25*xabs
25*xabs = 131918
C
w7884
131923 >= 25*xabs
25*xabs = 131923
D
w7885
131931 >= 25*xabs
25*xabs = 131931
C
w7886
26387 >= 5*xabs
5*xabs = 26387
D
w7887
131943 >= 25*xabs
25*xabs = 131943
C
w7888
131947 >= 25*xabs
25*xabs = 131947
D
w7889
131954 >= 25*xabs
25*xabs = 131954
C
w7890
26392 >= 5*xabs
5*xabs = 26392
B
w7891
132017 >= 25*xabs
25*xabs = 132017
A
w7892
26404 >= 5*xabs
5*xabs = 26404
B

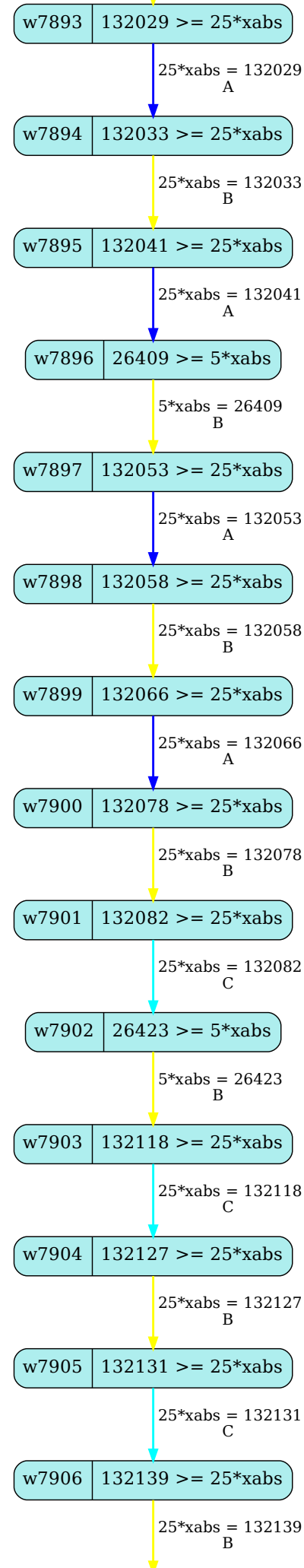
w7893
132029 >= 25*xabs
25*xabs = 132029
A
w7894
132033 >= 25*xabs
25*xabs = 132033
B
w7895
132041 >= 25*xabs
25*xabs = 132041
A
w7896
26409 >= 5*xabs
5*xabs = 26409
B
w7897
132053 >= 25*xabs
25*xabs = 132053
A
w7898
132058 >= 25*xabs
25*xabs = 132058
B
w7899
132066 >= 25*xabs
25*xabs = 132066
A
w7900
132078 >= 25*xabs
25*xabs = 132078
B
w7901
132082 >= 25*xabs
25*xabs = 132082
C
w7902
26423 >= 5*xabs
5*xabs = 26423
B
w7903
132118 >= 25*xabs
25*xabs = 132118
C
w7904
132127 >= 25*xabs
25*xabs = 132127
B
w7905
132131 >= 25*xabs
25*xabs = 132131
C
w7906
132139 >= 25*xabs
25*xabs = 132139
B

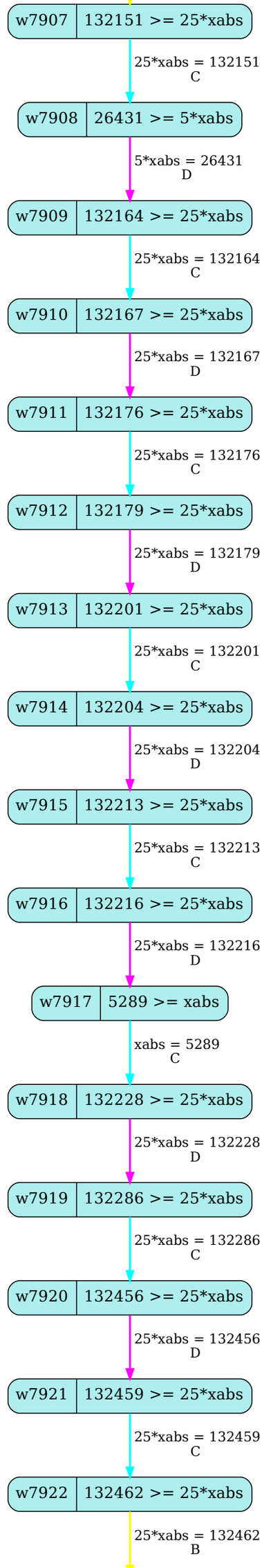
w7907
132151 >= 25*xabs
25*xabs = 132151
C
w7908
26431 >= 5*xabs
5*xabs = 26431
D
w7909
132164 >= 25*xabs
25*xabs = 132164
C
w7910
132167 >= 25*xabs
25*xabs = 132167
D
w7911
132176 >= 25*xabs
25*xabs = 132176
C
w7912
132179 >= 25*xabs
25*xabs = 132179
D
w7913
132201 >= 25*xabs
25*xabs = 132201
C
w7914
132204 >= 25*xabs
25*xabs = 132204
D
w7915
132213 >= 25*xabs
25*xabs = 132213
C
w7916
132216 >= 25*xabs
25*xabs = 132216
D
w7917
5289 >= xabs
xabs = 5289
C
w7918
132228 >= 25*xabs
25*xabs = 132228
D
w7919
132286 >= 25*xabs
25*xabs = 132286
C
w7920
132456 >= 25*xabs
25*xabs = 132456
D
w7921
132459 >= 25*xabs
25*xabs = 132459
C
w7922
132462 >= 25*xabs
25*xabs = 132462
B

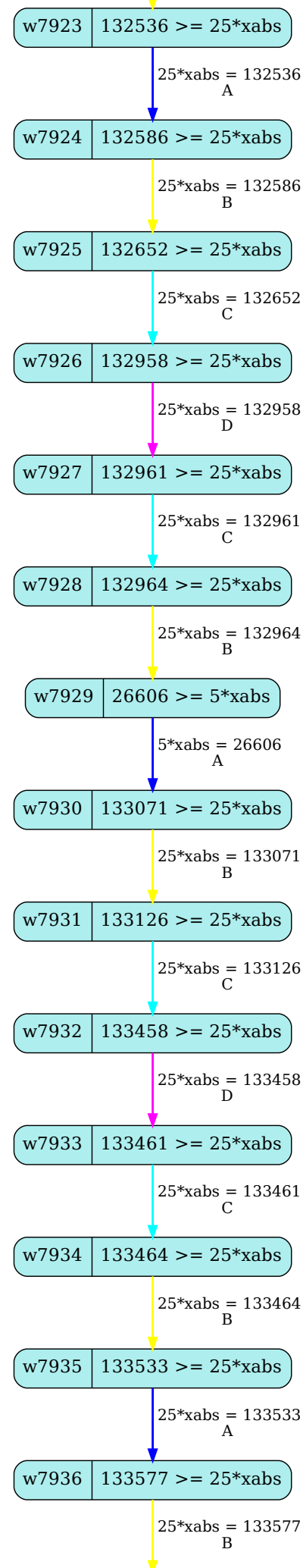
w7923
132536 >= 25*xabs
25*xabs = 132536
A
w7924
132586 >= 25*xabs
25*xabs = 132586
B
w7925
132652 >= 25*xabs
25*xabs = 132652
C
w7926
132958 >= 25*xabs
25*xabs = 132958
D
w7927
132961 >= 25*xabs
25*xabs = 132961
C
w7928
132964 >= 25*xabs
25*xabs = 132964
B
w7929
26606 >= 5*xabs
5*xabs = 26606
A
w7930
133071 >= 25*xabs
25*xabs = 133071
B
w7931
133126 >= 25*xabs
25*xabs = 133126
C
w7932
133458 >= 25*xabs
25*xabs = 133458
D
w7933
133461 >= 25*xabs
25*xabs = 133461
C
w7934
133464 >= 25*xabs
25*xabs = 133464
B
w7935
133533 >= 25*xabs
25*xabs = 133533
A
w7936
133577 >= 25*xabs
25*xabs = 133577
B

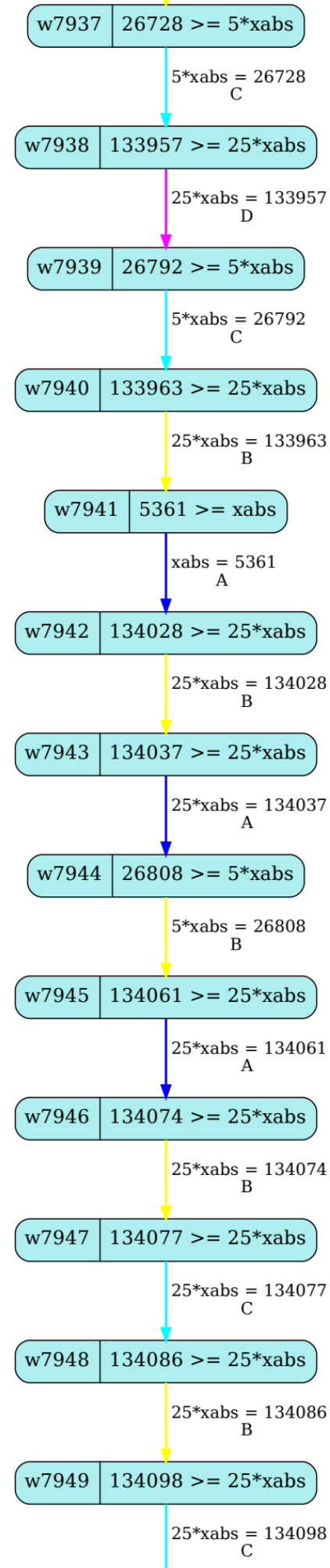
w7937
26728 >= 5*xabs
5*xabs = 26728
C
w7938
133957 >= 25*xabs
25*xabs = 133957
D
w7939
26792 >= 5*xabs
5*xabs = 26792
C
w7940
133963 >= 25*xabs
25*xabs = 133963
B
w7941
5361 >= xabs
xabs = 5361
A
w7942
134028 >= 25*xabs
25*xabs = 134028
B
w7943
134037 >= 25*xabs
25*xabs = 134037
A
w7944
26808 >= 5*xabs
5*xabs = 26808
B
w7945
134061 >= 25*xabs
25*xabs = 134061
A
w7946
134074 >= 25*xabs
25*xabs = 134074
B
w7947
134077 >= 25*xabs
25*xabs = 134077
C
w7948
134086 >= 25*xabs
25*xabs = 134086
B
w7949
134098 >= 25*xabs
25*xabs = 134098
C

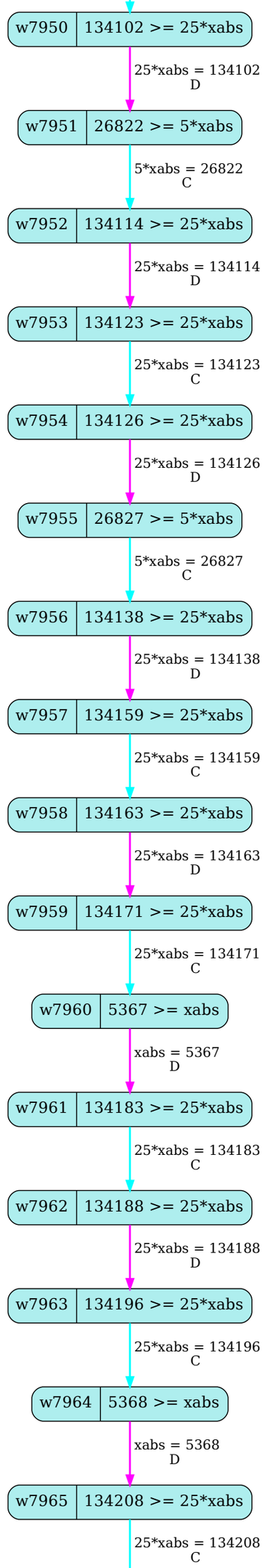
w7950
134102 >= 25*xabs
25*xabs = 134102
D
w7951
26822 >= 5*xabs
5*xabs = 26822
C
w7952
134114 >= 25*xabs
25*xabs = 134114
D
w7953
134123 >= 25*xabs
25*xabs = 134123
C
w7954
134126 >= 25*xabs
25*xabs = 134126
D
w7955
26827 >= 5*xabs
5*xabs = 26827
C
w7956
134138 >= 25*xabs
25*xabs = 134138
D
w7957
134159 >= 25*xabs
25*xabs = 134159
C
w7958
134163 >= 25*xabs
25*xabs = 134163
D
w7959
134171 >= 25*xabs
25*xabs = 134171
C
w7960
5367 >= xabs
xabs = 5367
D
w7961
134183 >= 25*xabs
25*xabs = 134183
C
w7962
134188 >= 25*xabs
25*xabs = 134188
D
w7963
134196 >= 25*xabs
25*xabs = 134196
C
w7964
5368 >= xabs
xabs = 5368
D
w7965
134208 >= 25*xabs
25*xabs = 134208
C

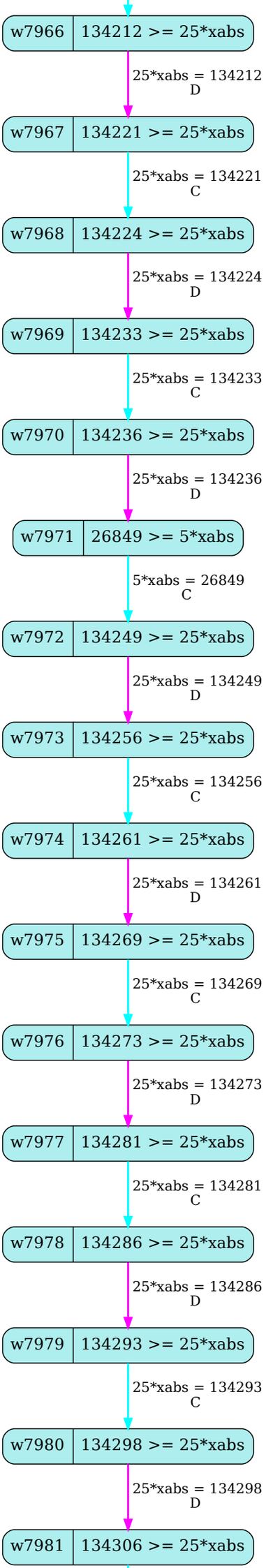
w7966
134212 >= 25*xabs
25*xabs = 134212
D
w7967
134221 >= 25*xabs
25*xabs = 134221
C
w7968
134224 >= 25*xabs
25*xabs = 134224
D
w7969
134233 >= 25*xabs
25*xabs = 134233
C
w7970
134236 >= 25*xabs
25*xabs = 134236
D
w7971
26849 >= 5*xabs
5*xabs = 26849
C
w7972
134249 >= 25*xabs
25*xabs = 134249
D
w7973
134256 >= 25*xabs
25*xabs = 134256
C
w7974
134261 >= 25*xabs
25*xabs = 134261
D
w7975
134269 >= 25*xabs
25*xabs = 134269
C
w7976
134273 >= 25*xabs
25*xabs = 134273
D
w7977
134281 >= 25*xabs
25*xabs = 134281
C
w7978
134286 >= 25*xabs
25*xabs = 134286
D
w7979
134293 >= 25*xabs
25*xabs = 134293
C
w7980
134298 >= 25*xabs
25*xabs = 134298
D
w7981
134306 >= 25*xabs

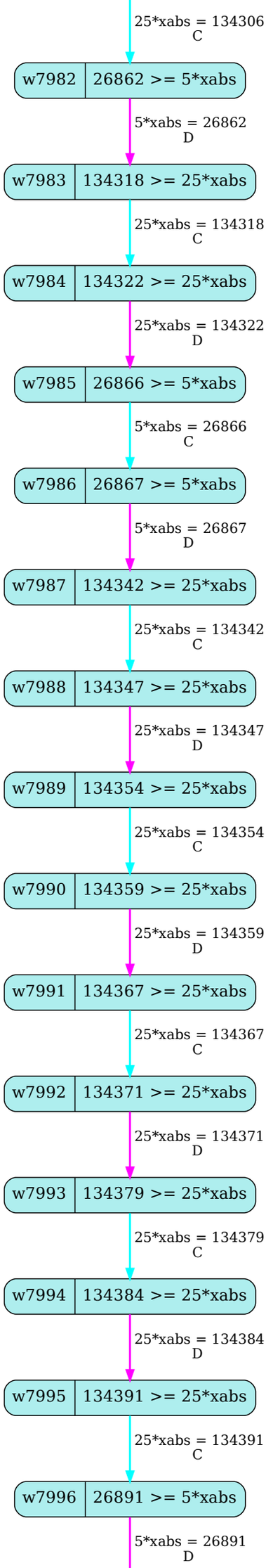
25*xabs = 134306
C
w7982
26862 >= 5*xabs
5*xabs = 26862
D
w7983
134318 >= 25*xabs
25*xabs = 134318
C
w7984
134322 >= 25*xabs
25*xabs = 134322
D
w7985
26866 >= 5*xabs
5*xabs = 26866
C
w7986
26867 >= 5*xabs
5*xabs = 26867
D
w7987
134342 >= 25*xabs
25*xabs = 134342
C
w7988
134347 >= 25*xabs
25*xabs = 134347
D
w7989
134354 >= 25*xabs
25*xabs = 134354
C
w7990
134359 >= 25*xabs
25*xabs = 134359
D
w7991
134367 >= 25*xabs
25*xabs = 134367
C
w7992
134371 >= 25*xabs
25*xabs = 134371
D
w7993
134379 >= 25*xabs
25*xabs = 134379
C
w7994
134384 >= 25*xabs
25*xabs = 134384
D
w7995
134391 >= 25*xabs
25*xabs = 134391
C
w7996
26891 >= 5*xabs
5*xabs = 26891
D

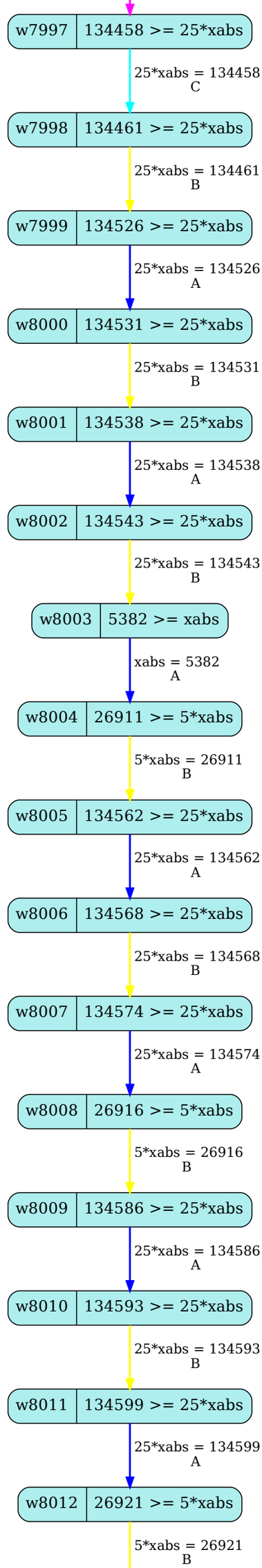
w7997
134458 >= 25*xabs
25*xabs = 134458
C
w7998
134461 >= 25*xabs
25*xabs = 134461
B
w7999
134526 >= 25*xabs
25*xabs = 134526
A
w8000
134531 >= 25*xabs
25*xabs = 134531
B
w8001
134538 >= 25*xabs
25*xabs = 134538
A
w8002
134543 >= 25*xabs
25*xabs = 134543
B
w8003
5382 >= xabs
xabs = 5382
A
w8004
26911 >= 5*xabs
5*xabs = 26911
B
w8005
134562 >= 25*xabs
25*xabs = 134562
A
w8006
134568 >= 25*xabs
25*xabs = 134568
B
w8007
134574 >= 25*xabs
25*xabs = 134574
A
w8008
26916 >= 5*xabs
5*xabs = 26916
B
w8009
134586 >= 25*xabs
25*xabs = 134586
A
w8010
134593 >= 25*xabs
25*xabs = 134593
B
w8011
134599 >= 25*xabs
25*xabs = 134599
A
w8012
26921 >= 5*xabs
5*xabs = 26921
B

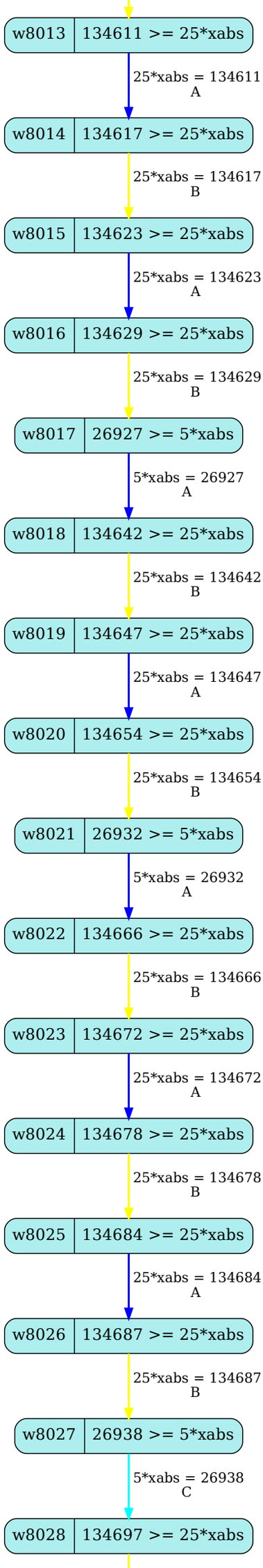
w8013
134611 >= 25*xabs
25*xabs = 134611
A
w8014
134617 >= 25*xabs
25*xabs = 134617
B
w8015
134623 >= 25*xabs
25*xabs = 134623
A
w8016
134629 >= 25*xabs
25*xabs = 134629
B
w8017
26927 >= 5*xabs
5*xabs = 26927
A
w8018
134642 >= 25*xabs
25*xabs = 134642
B
w8019
134647 >= 25*xabs
25*xabs = 134647
A
w8020
134654 >= 25*xabs
25*xabs = 134654
B
w8021
26932 >= 5*xabs
5*xabs = 26932
A
w8022
134666 >= 25*xabs
25*xabs = 134666
B
w8023
134672 >= 25*xabs
25*xabs = 134672
A
w8024
134678 >= 25*xabs
25*xabs = 134678
B
w8025
134684 >= 25*xabs
25*xabs = 134684
A
w8026
134687 >= 25*xabs
25*xabs = 134687
B
w8027
26938 >= 5*xabs
5*xabs = 26938
C
w8028
134697 >= 25*xabs

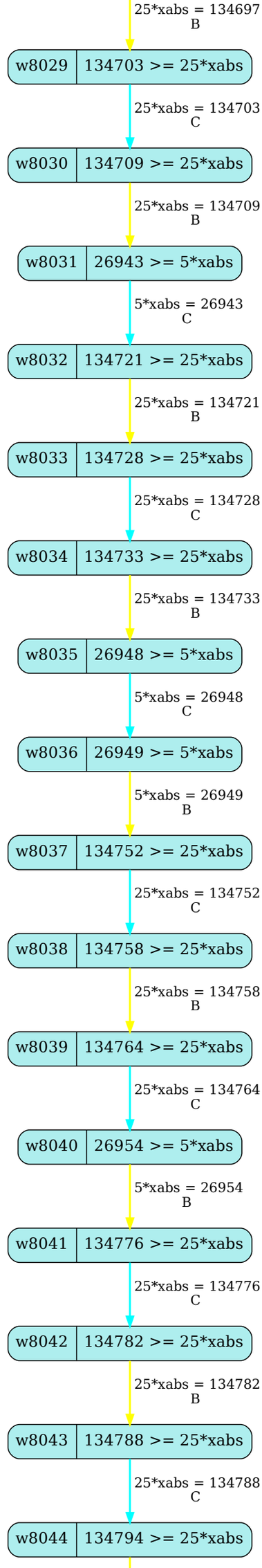
25*xabs = 134697
B
w8029
134703 >= 25*xabs
25*xabs = 134703
C
w8030
134709 >= 25*xabs
25*xabs = 134709
B
w8031
26943 >= 5*xabs
5*xabs = 26943
C
w8032
134721 >= 25*xabs
25*xabs = 134721
B
w8033
134728 >= 25*xabs
25*xabs = 134728
C
w8034
134733 >= 25*xabs
25*xabs = 134733
B
w8035
26948 >= 5*xabs
5*xabs = 26948
C
w8036
26949 >= 5*xabs
5*xabs = 26949
B
w8037
134752 >= 25*xabs
25*xabs = 134752
C
w8038
134758 >= 25*xabs
25*xabs = 134758
B
w8039
134764 >= 25*xabs
25*xabs = 134764
C
w8040
26954 >= 5*xabs
5*xabs = 26954
B
w8041
134776 >= 25*xabs
25*xabs = 134776
C
w8042
134782 >= 25*xabs
25*xabs = 134782
B
w8043
134788 >= 25*xabs
25*xabs = 134788
C
w8044
134794 >= 25*xabs

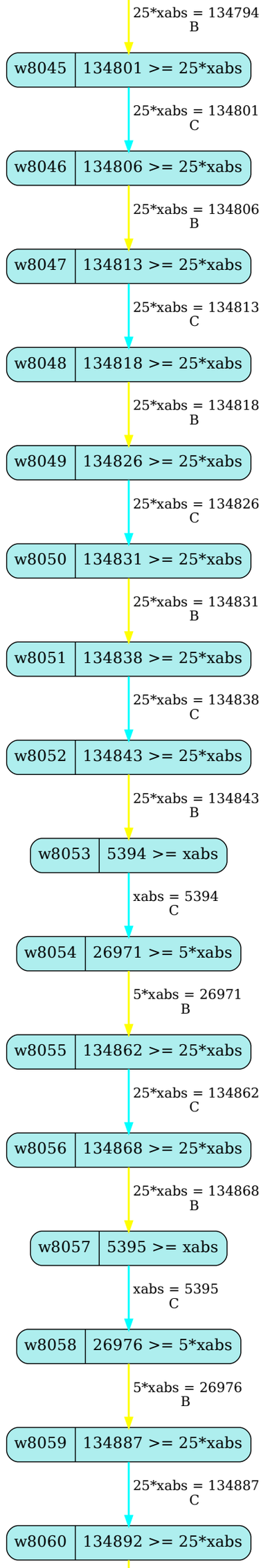
25*xabs = 134794
B
w8045
134801 >= 25*xabs
25*xabs = 134801
C
w8046
134806 >= 25*xabs
25*xabs = 134806
B
w8047
134813 >= 25*xabs
25*xabs = 134813
C
w8048
134818 >= 25*xabs
25*xabs = 134818
B
w8049
134826 >= 25*xabs
25*xabs = 134826
C
w8050
134831 >= 25*xabs
25*xabs = 134831
B
w8051
134838 >= 25*xabs
25*xabs = 134838
C
w8052
134843 >= 25*xabs
25*xabs = 134843
B
w8053
5394 >= xabs
xabs = 5394
C
w8054
26971 >= 5*xabs
5*xabs = 26971
B
w8055
134862 >= 25*xabs
25*xabs = 134862
C
w8056
134868 >= 25*xabs
25*xabs = 134868
B
w8057
5395 >= xabs
xabs = 5395
C
w8058
26976 >= 5*xabs
5*xabs = 26976
B
w8059
134887 >= 25*xabs
25*xabs = 134887
C
w8060
134892 >= 25*xabs

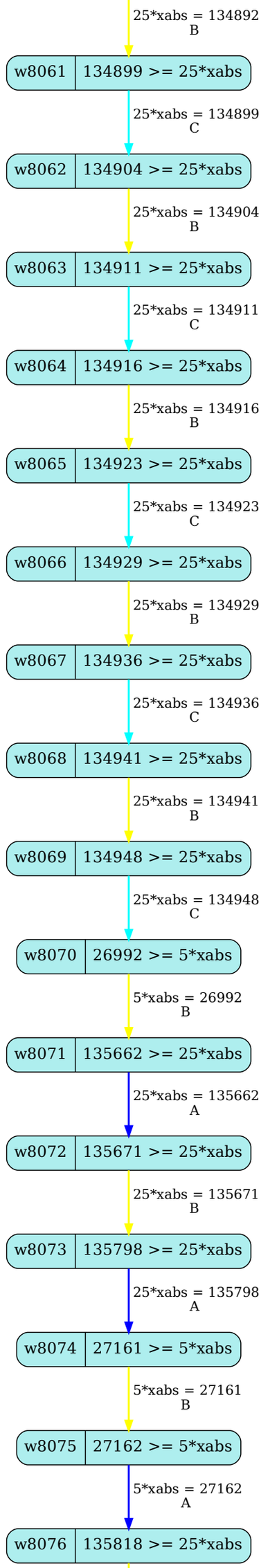
25*xabs = 134892
B
w8061
134899 >= 25*xabs
25*xabs = 134899
C
w8062
134904 >= 25*xabs
25*xabs = 134904
B
w8063
134911 >= 25*xabs
25*xabs = 134911
C
w8064
134916 >= 25*xabs
25*xabs = 134916
B
w8065
134923 >= 25*xabs
25*xabs = 134923
C
w8066
134929 >= 25*xabs
25*xabs = 134929
B
w8067
134936 >= 25*xabs
25*xabs = 134936
C
w8068
134941 >= 25*xabs
25*xabs = 134941
B
w8069
134948 >= 25*xabs
25*xabs = 134948
C
w8070
26992 >= 5*xabs
5*xabs = 26992
B
w8071
135662 >= 25*xabs
25*xabs = 135662
A
w8072
135671 >= 25*xabs
25*xabs = 135671
B
w8073
135798 >= 25*xabs
25*xabs = 135798
A
w8074
27161 >= 5*xabs
5*xabs = 27161
B
w8075
27162 >= 5*xabs
5*xabs = 27162
A
w8076
135818 >= 25*xabs

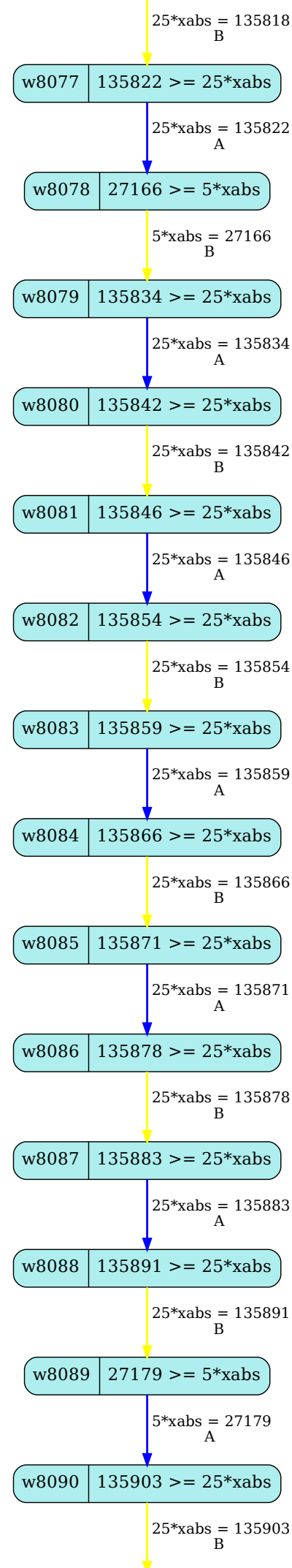
25*xabs = 135818
B
w8077
135822 >= 25*xabs
25*xabs = 135822
A
w8078
27166 >= 5*xabs
5*xabs = 27166
B
w8079
135834 >= 25*xabs
25*xabs = 135834
A
w8080
135842 >= 25*xabs
25*xabs = 135842
B
w8081
135846 >= 25*xabs
25*xabs = 135846
A
w8082
135854 >= 25*xabs
25*xabs = 135854
B
w8083
135859 >= 25*xabs
25*xabs = 135859
A
w8084
135866 >= 25*xabs
25*xabs = 135866
B
w8085
135871 >= 25*xabs
25*xabs = 135871
A
w8086
135878 >= 25*xabs
25*xabs = 135878
B
w8087
135883 >= 25*xabs
25*xabs = 135883
A
w8088
135891 >= 25*xabs
25*xabs = 135891
B
w8089
27179 >= 5*xabs
5*xabs = 27179
A
w8090
135903 >= 25*xabs
25*xabs = 135903
B

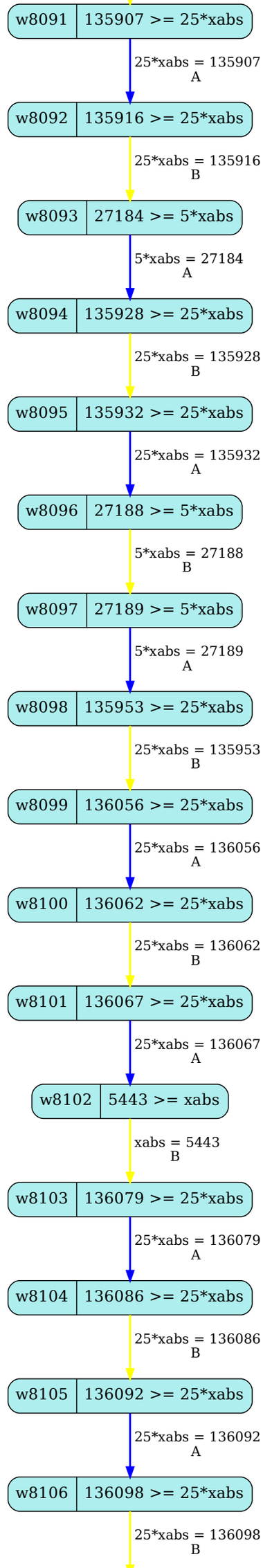
w8091
135907 >= 25*xabs
25*xabs = 135907
A
w8092
135916 >= 25*xabs
25*xabs = 135916
B
w8093
27184 >= 5*xabs
5*xabs = 27184
A
w8094
135928 >= 25*xabs
25*xabs = 135928
B
w8095
135932 >= 25*xabs
25*xabs = 135932
A
w8096
27188 >= 5*xabs
5*xabs = 27188
B
w8097
27189 >= 5*xabs
5*xabs = 27189
A
w8098
135953 >= 25*xabs
25*xabs = 135953
B
w8099
136056 >= 25*xabs
25*xabs = 136056
A
w8100
136062 >= 25*xabs
25*xabs = 136062
B
w8101
136067 >= 25*xabs
25*xabs = 136067
A
w8102
5443 >= xabs
xabs = 5443
B
w8103
136079 >= 25*xabs
25*xabs = 136079
A
w8104
136086 >= 25*xabs
25*xabs = 136086
B
w8105
136092 >= 25*xabs
25*xabs = 136092
A
w8106
136098 >= 25*xabs
25*xabs = 136098
B

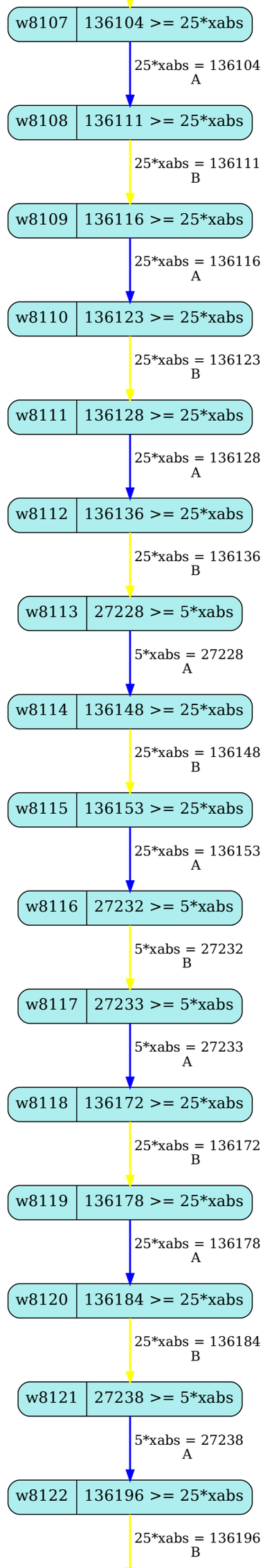
w8107
136104 >= 25*xabs
25*xabs = 136104
A
w8108
136111 >= 25*xabs
25*xabs = 136111
B
w8109
136116 >= 25*xabs
25*xabs = 136116
A
w8110
136123 >= 25*xabs
25*xabs = 136123
B
w8111
136128 >= 25*xabs
25*xabs = 136128
A
w8112
136136 >= 25*xabs
25*xabs = 136136
B
w8113
27228 >= 5*xabs
5*xabs = 27228
A
w8114
136148 >= 25*xabs
25*xabs = 136148
B
w8115
136153 >= 25*xabs
25*xabs = 136153
A
w8116
27232 >= 5*xabs
5*xabs = 27232
B
w8117
27233 >= 5*xabs
5*xabs = 27233
A
w8118
136172 >= 25*xabs
25*xabs = 136172
B
w8119
136178 >= 25*xabs
25*xabs = 136178
A
w8120
136184 >= 25*xabs
25*xabs = 136184
B
w8121
27238 >= 5*xabs
5*xabs = 27238
A
w8122
136196 >= 25*xabs
25*xabs = 136196
B

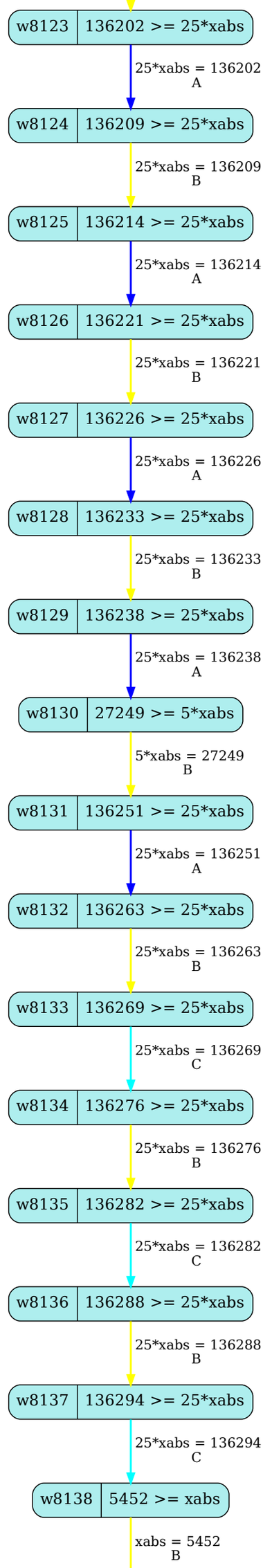
w8123
136202 >= 25*xabs
25*xabs = 136202
A
w8124
136209 >= 25*xabs
25*xabs = 136209
B
w8125
136214 >= 25*xabs
25*xabs = 136214
A
w8126
136221 >= 25*xabs
25*xabs = 136221
B
w8127
136226 >= 25*xabs
25*xabs = 136226
A
w8128
136233 >= 25*xabs
25*xabs = 136233
B
w8129
136238 >= 25*xabs
25*xabs = 136238
A
w8130
27249 >= 5*xabs
5*xabs = 27249
B
w8131
136251 >= 25*xabs
25*xabs = 136251
A
w8132
136263 >= 25*xabs
25*xabs = 136263
B
w8133
136269 >= 25*xabs
25*xabs = 136269
C
w8134
136276 >= 25*xabs
25*xabs = 136276
B
w8135
136282 >= 25*xabs
25*xabs = 136282
C
w8136
136288 >= 25*xabs
25*xabs = 136288
B
w8137
136294 >= 25*xabs
25*xabs = 136294
C
w8138
5452 >= xabs
xabs = 5452
B

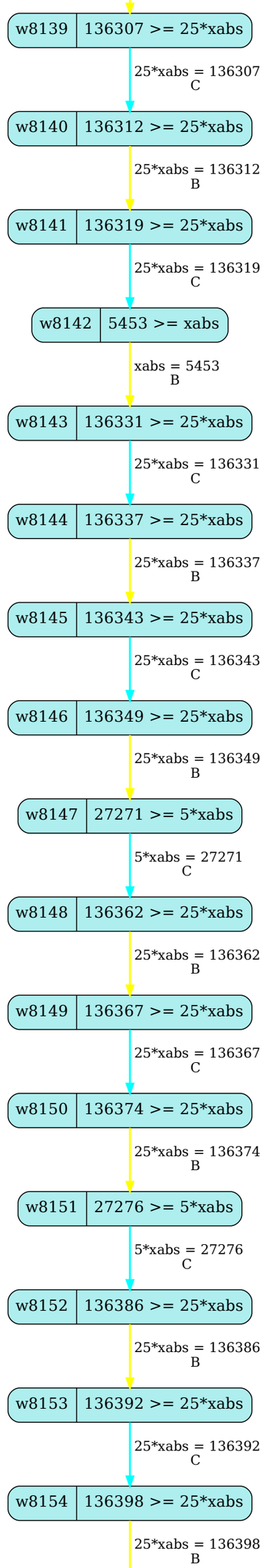
w8139
136307 >= 25*xabs
25*xabs = 136307
C
w8140
136312 >= 25*xabs
25*xabs = 136312
B
w8141
136319 >= 25*xabs
25*xabs = 136319
C
w8142
5453 >= xabs
xabs = 5453
B
w8143
136331 >= 25*xabs
25*xabs = 136331
C
w8144
136337 >= 25*xabs
25*xabs = 136337
B
w8145
136343 >= 25*xabs
25*xabs = 136343
C
w8146
136349 >= 25*xabs
25*xabs = 136349
B
w8147
27271 >= 5*xabs
5*xabs = 27271
C
w8148
136362 >= 25*xabs
25*xabs = 136362
B
w8149
136367 >= 25*xabs
25*xabs = 136367
C
w8150
136374 >= 25*xabs
25*xabs = 136374
B
w8151
27276 >= 5*xabs
5*xabs = 27276
C
w8152
136386 >= 25*xabs
25*xabs = 136386
B
w8153
136392 >= 25*xabs
25*xabs = 136392
C
w8154
136398 >= 25*xabs
25*xabs = 136398
B

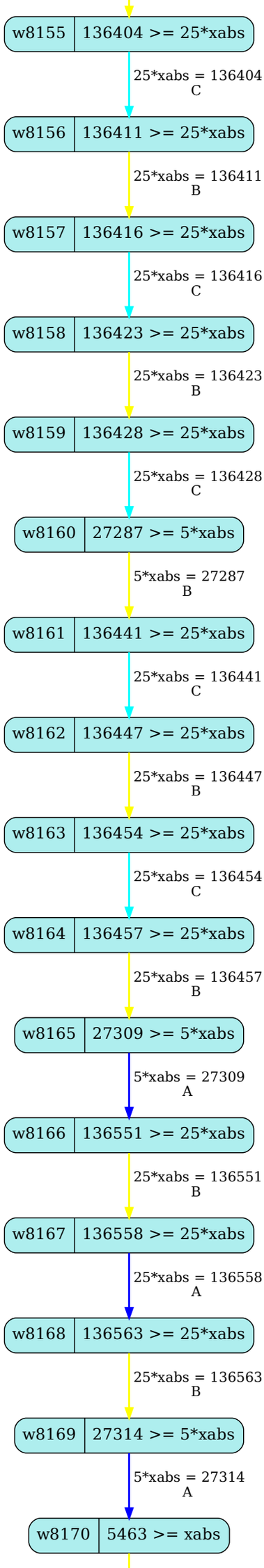
w8155
136404 >= 25*xabs
25*xabs = 136404
C
w8156
136411 >= 25*xabs
25*xabs = 136411
B
w8157
136416 >= 25*xabs
25*xabs = 136416
C
w8158
136423 >= 25*xabs
25*xabs = 136423
B
w8159
136428 >= 25*xabs
25*xabs = 136428
C
w8160
27287 >= 5*xabs
5*xabs = 27287
B
w8161
136441 >= 25*xabs
25*xabs = 136441
C
w8162
136447 >= 25*xabs
25*xabs = 136447
B
w8163
136454 >= 25*xabs
25*xabs = 136454
C
w8164
136457 >= 25*xabs
25*xabs = 136457
B
w8165
27309 >= 5*xabs
5*xabs = 27309
A
w8166
136551 >= 25*xabs
25*xabs = 136551
B
w8167
136558 >= 25*xabs
25*xabs = 136558
A
w8168
136563 >= 25*xabs
25*xabs = 136563
B
w8169
27314 >= 5*xabs
5*xabs = 27314
A
w8170
5463 >= xabs

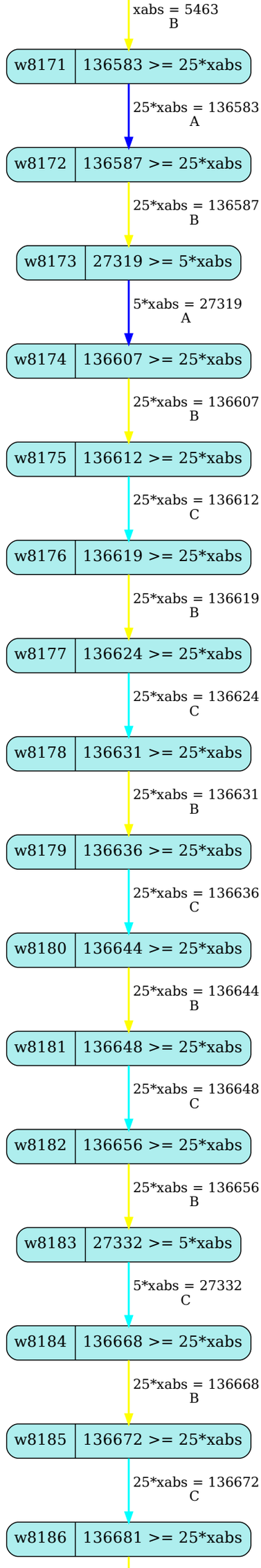
xabs = 5463
B
w8171
136583 >= 25*xabs
25*xabs = 136583
A
w8172
136587 >= 25*xabs
25*xabs = 136587
B
w8173
27319 >= 5*xabs
5*xabs = 27319
A
w8174
136607 >= 25*xabs
25*xabs = 136607
B
w8175
136612 >= 25*xabs
25*xabs = 136612
C
w8176
136619 >= 25*xabs
25*xabs = 136619
B
w8177
136624 >= 25*xabs
25*xabs = 136624
C
w8178
136631 >= 25*xabs
25*xabs = 136631
B
w8179
136636 >= 25*xabs
25*xabs = 136636
C
w8180
136644 >= 25*xabs
25*xabs = 136644
B
w8181
136648 >= 25*xabs
25*xabs = 136648
C
w8182
136656 >= 25*xabs
25*xabs = 136656
B
w8183
27332 >= 5*xabs
5*xabs = 27332
C
w8184
136668 >= 25*xabs
25*xabs = 136668
B
w8185
136672 >= 25*xabs
25*xabs = 136672
C
w8186
136681 >= 25*xabs

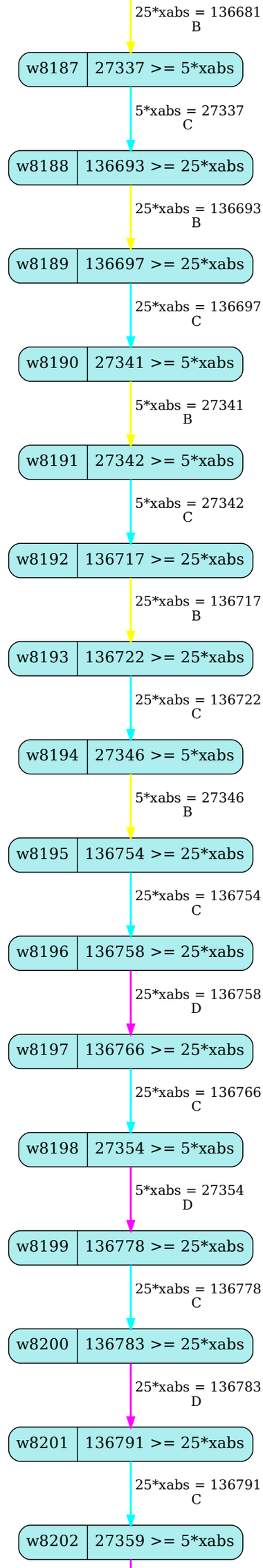
25*xabs = 136681
B
w8187
27337 >= 5*xabs
5*xabs = 27337
C
w8188
136693 >= 25*xabs
25*xabs = 136693
B
w8189
136697 >= 25*xabs
25*xabs = 136697
C
w8190
27341 >= 5*xabs
5*xabs = 27341
B
w8191
27342 >= 5*xabs
5*xabs = 27342
C
w8192
136717 >= 25*xabs
25*xabs = 136717
B
w8193
136722 >= 25*xabs
25*xabs = 136722
C
w8194
27346 >= 5*xabs
5*xabs = 27346
B
w8195
136754 >= 25*xabs
25*xabs = 136754
C
w8196
136758 >= 25*xabs
25*xabs = 136758
D
w8197
136766 >= 25*xabs
25*xabs = 136766
C
w8198
27354 >= 5*xabs
5*xabs = 27354
D
w8199
136778 >= 25*xabs
25*xabs = 136778
C
w8200
136783 >= 25*xabs
25*xabs = 136783
D
w8201
136791 >= 25*xabs
25*xabs = 136791
C
w8202
27359 >= 5*xabs

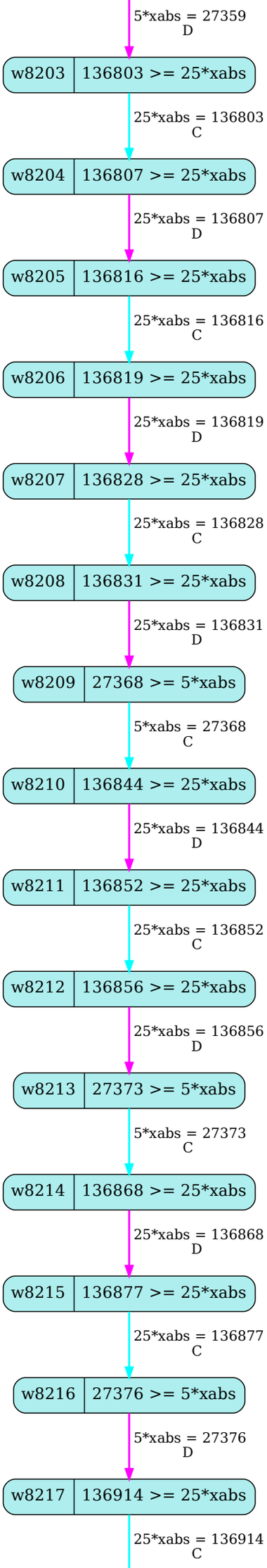
5*xabs = 27359
D
w8203
136803 >= 25*xabs
25*xabs = 136803
C
w8204
136807 >= 25*xabs
25*xabs = 136807
D
w8205
136816 >= 25*xabs
25*xabs = 136816
C
w8206
136819 >= 25*xabs
25*xabs = 136819
D
w8207
136828 >= 25*xabs
25*xabs = 136828
C
w8208
136831 >= 25*xabs
25*xabs = 136831
D
w8209
27368 >= 5*xabs
5*xabs = 27368
C
w8210
136844 >= 25*xabs
25*xabs = 136844
D
w8211
136852 >= 25*xabs
25*xabs = 136852
C
w8212
136856 >= 25*xabs
25*xabs = 136856
D
w8213
27373 >= 5*xabs
5*xabs = 27373
C
w8214
136868 >= 25*xabs
25*xabs = 136868
D
w8215
136877 >= 25*xabs
25*xabs = 136877
C
w8216
27376 >= 5*xabs
5*xabs = 27376
D
w8217
136914 >= 25*xabs
25*xabs = 136914
C

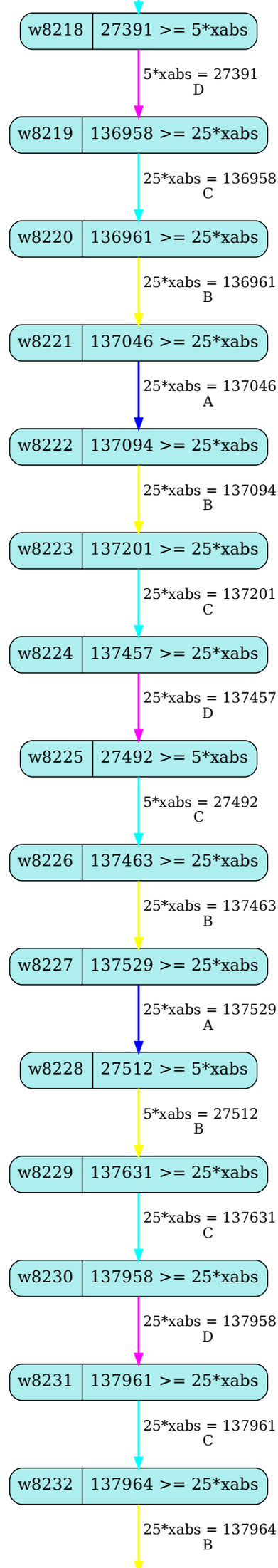
w8218
27391 >= 5*xabs
5*xabs = 27391
D
w8219
136958 >= 25*xabs
25*xabs = 136958
C
w8220
136961 >= 25*xabs
25*xabs = 136961
B
w8221
137046 >= 25*xabs
25*xabs = 137046
A
w8222
137094 >= 25*xabs
25*xabs = 137094
B
w8223
137201 >= 25*xabs
25*xabs = 137201
C
w8224
137457 >= 25*xabs
25*xabs = 137457
D
w8225
27492 >= 5*xabs
5*xabs = 27492
C
w8226
137463 >= 25*xabs
25*xabs = 137463
B
w8227
137529 >= 25*xabs
25*xabs = 137529
A
w8228
27512 >= 5*xabs
5*xabs = 27512
B
w8229
137631 >= 25*xabs
25*xabs = 137631
C
w8230
137958 >= 25*xabs
25*xabs = 137958
D
w8231
137961 >= 25*xabs
25*xabs = 137961
C
w8232
137964 >= 25*xabs
25*xabs = 137964
B

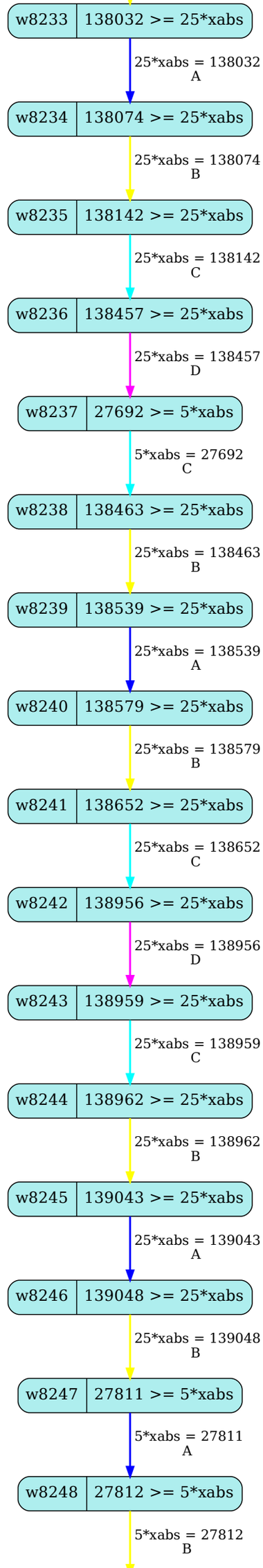
w8233
138032 >= 25*xabs
25*xabs = 138032
A
w8234
138074 >= 25*xabs
25*xabs = 138074
B
w8235
138142 >= 25*xabs
25*xabs = 138142
C
w8236
138457 >= 25*xabs
25*xabs = 138457
D
w8237
27692 >= 5*xabs
5*xabs = 27692
C
w8238
138463 >= 25*xabs
25*xabs = 138463
B
w8239
138539 >= 25*xabs
25*xabs = 138539
A
w8240
138579 >= 25*xabs
25*xabs = 138579
B
w8241
138652 >= 25*xabs
25*xabs = 138652
C
w8242
138956 >= 25*xabs
25*xabs = 138956
D
w8243
138959 >= 25*xabs
25*xabs = 138959
C
w8244
138962 >= 25*xabs
25*xabs = 138962
B
w8245
139043 >= 25*xabs
25*xabs = 139043
A
w8246
139048 >= 25*xabs
25*xabs = 139048
B
w8247
27811 >= 5*xabs
5*xabs = 27811
A
w8248
27812 >= 5*xabs
5*xabs = 27812
B

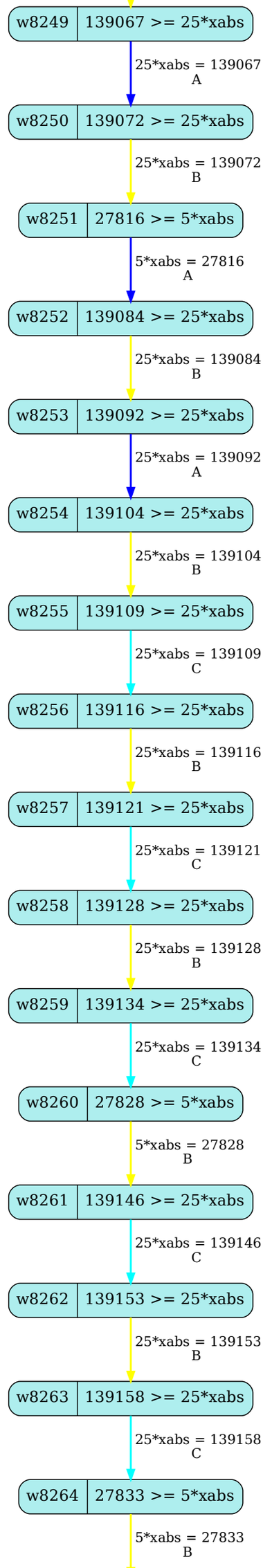
w8249
139067 >= 25*xabs
25*xabs = 139067
A
w8250
139072 >= 25*xabs
25*xabs = 139072
B
w8251
27816 >= 5*xabs
5*xabs = 27816
A
w8252
139084 >= 25*xabs
25*xabs = 139084
B
w8253
139092 >= 25*xabs
25*xabs = 139092
A
w8254
139104 >= 25*xabs
25*xabs = 139104
B
w8255
139109 >= 25*xabs
25*xabs = 139109
C
w8256
139116 >= 25*xabs
25*xabs = 139116
B
w8257
139121 >= 25*xabs
25*xabs = 139121
C
w8258
139128 >= 25*xabs
25*xabs = 139128
B
w8259
139134 >= 25*xabs
25*xabs = 139134
C
w8260
27828 >= 5*xabs
5*xabs = 27828
B
w8261
139146 >= 25*xabs
25*xabs = 139146
C
w8262
139153 >= 25*xabs
25*xabs = 139153
B
w8263
139158 >= 25*xabs
25*xabs = 139158
C
w8264
27833 >= 5*xabs
5*xabs = 27833
B

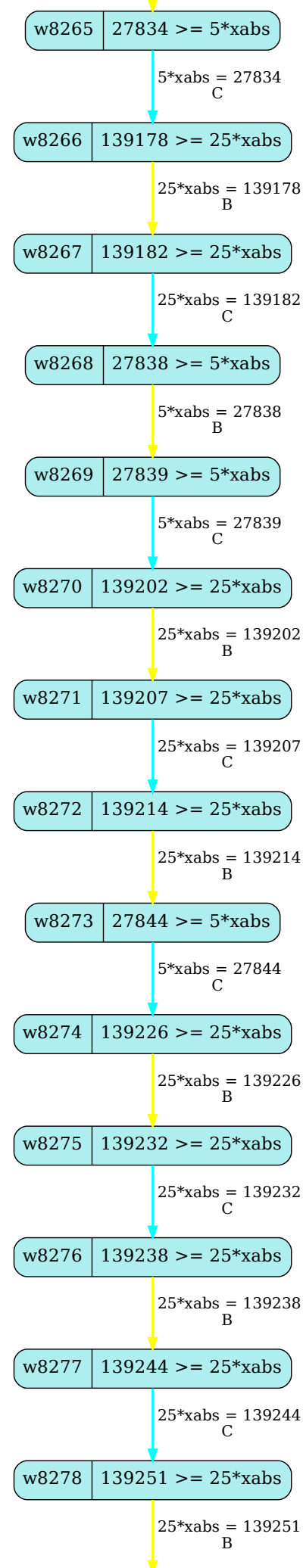
w8265
27834 >= 5*xabs
5*xabs = 27834
C
w8266
139178 >= 25*xabs
25*xabs = 139178
B
w8267
139182 >= 25*xabs
25*xabs = 139182
C
w8268
27838 >= 5*xabs
5*xabs = 27838
B
w8269
27839 >= 5*xabs
5*xabs = 27839
C
w8270
139202 >= 25*xabs
25*xabs = 139202
B
w8271
139207 >= 25*xabs
25*xabs = 139207
C
w8272
139214 >= 25*xabs
25*xabs = 139214
B
w8273
27844 >= 5*xabs
5*xabs = 27844
C
w8274
139226 >= 25*xabs
25*xabs = 139226
B
w8275
139232 >= 25*xabs
25*xabs = 139232
C
w8276
139238 >= 25*xabs
25*xabs = 139238
B
w8277
139244 >= 25*xabs
25*xabs = 139244
C
w8278
139251 >= 25*xabs
25*xabs = 139251
B

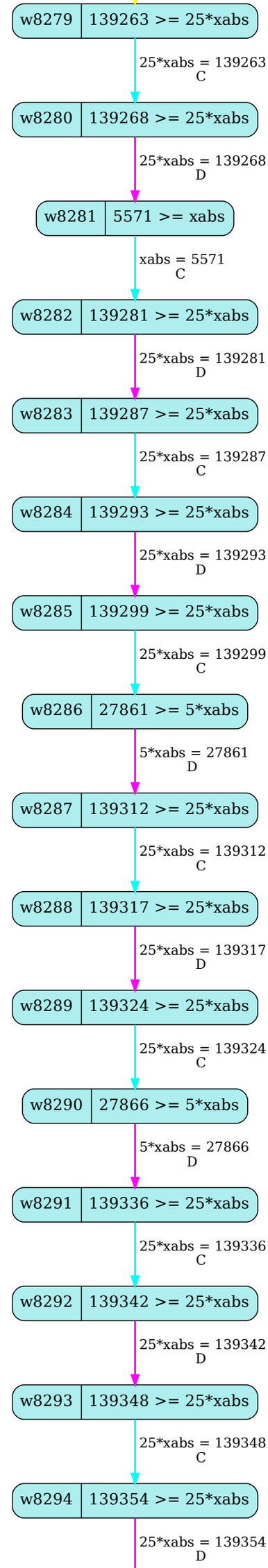
w8279
139263 >= 25*xabs
25*xabs = 139263
C
w8280
139268 >= 25*xabs
25*xabs = 139268
D
w8281
5571 >= xabs
xabs = 5571
C
w8282
139281 >= 25*xabs
25*xabs = 139281
D
w8283
139287 >= 25*xabs
25*xabs = 139287
C
w8284
139293 >= 25*xabs
25*xabs = 139293
D
w8285
139299 >= 25*xabs
25*xabs = 139299
C
w8286
27861 >= 5*xabs
5*xabs = 27861
D
w8287
139312 >= 25*xabs
25*xabs = 139312
C
w8288
139317 >= 25*xabs
25*xabs = 139317
D
w8289
139324 >= 25*xabs
25*xabs = 139324
C
w8290
27866 >= 5*xabs
5*xabs = 27866
D
w8291
139336 >= 25*xabs
25*xabs = 139336
C
w8292
139342 >= 25*xabs
25*xabs = 139342
D
w8293
139348 >= 25*xabs
25*xabs = 139348
C
w8294
139354 >= 25*xabs
25*xabs = 139354
D

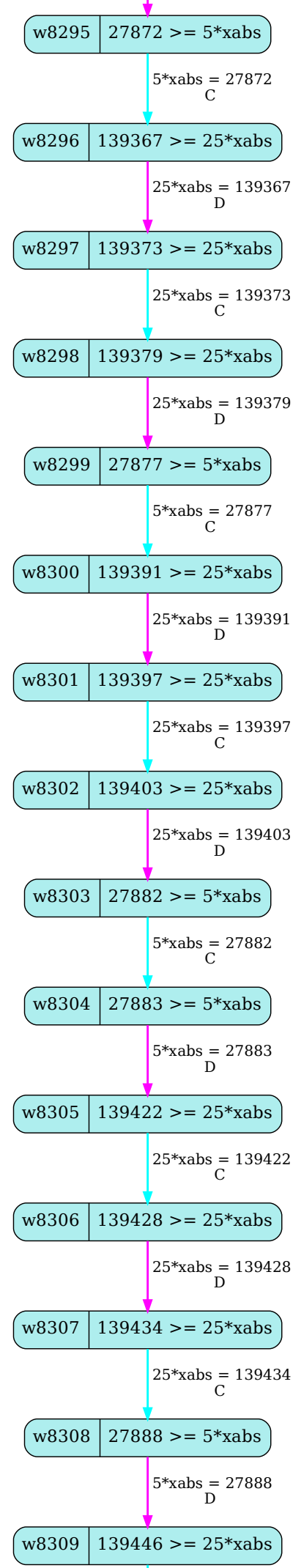
w8295
27872 >= 5*xabs
5*xabs = 27872
C
w8296
139367 >= 25*xabs
25*xabs = 139367
D
w8297
139373 >= 25*xabs
25*xabs = 139373
C
w8298
139379 >= 25*xabs
25*xabs = 139379
D
w8299
27877 >= 5*xabs
5*xabs = 27877
C
w8300
139391 >= 25*xabs
25*xabs = 139391
D
w8301
139397 >= 25*xabs
25*xabs = 139397
C
w8302
139403 >= 25*xabs
25*xabs = 139403
D
w8303
27882 >= 5*xabs
5*xabs = 27882
C
w8304
27883 >= 5*xabs
5*xabs = 27883
D
w8305
139422 >= 25*xabs
25*xabs = 139422
C
w8306
139428 >= 25*xabs
25*xabs = 139428
D
w8307
139434 >= 25*xabs
25*xabs = 139434
C
w8308
27888 >= 5*xabs
5*xabs = 27888
D
w8309
139446 >= 25*xabs

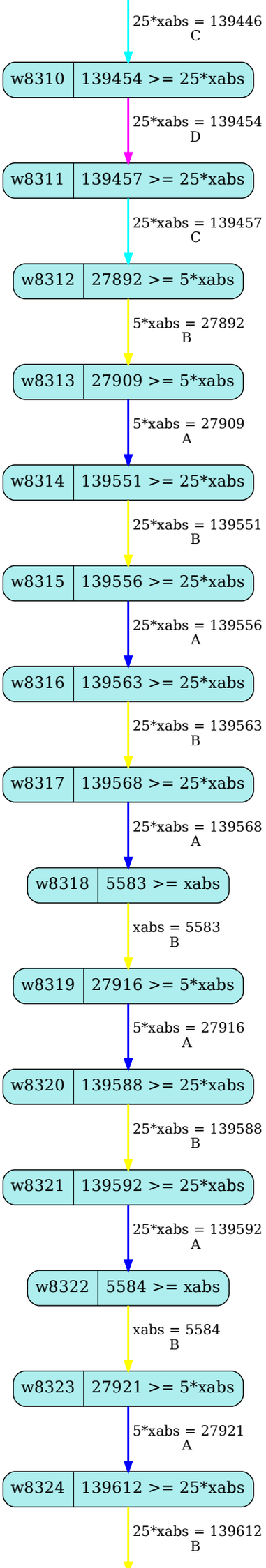
25*xabs = 139446
C
w8310
139454 >= 25*xabs
25*xabs = 139454
D
w8311
139457 >= 25*xabs
25*xabs = 139457
C
w8312
27892 >= 5*xabs
5*xabs = 27892
B
w8313
27909 >= 5*xabs
5*xabs = 27909
A
w8314
139551 >= 25*xabs
25*xabs = 139551
B
w8315
139556 >= 25*xabs
25*xabs = 139556
A
w8316
139563 >= 25*xabs
25*xabs = 139563
B
w8317
139568 >= 25*xabs
25*xabs = 139568
A
w8318
5583 >= xabs
xabs = 5583
B
w8319
27916 >= 5*xabs
5*xabs = 27916
A
w8320
139588 >= 25*xabs
25*xabs = 139588
B
w8321
139592 >= 25*xabs
25*xabs = 139592
A
w8322
5584 >= xabs
xabs = 5584
B
w8323
27921 >= 5*xabs
5*xabs = 27921
A
w8324
139612 >= 25*xabs
25*xabs = 139612
B

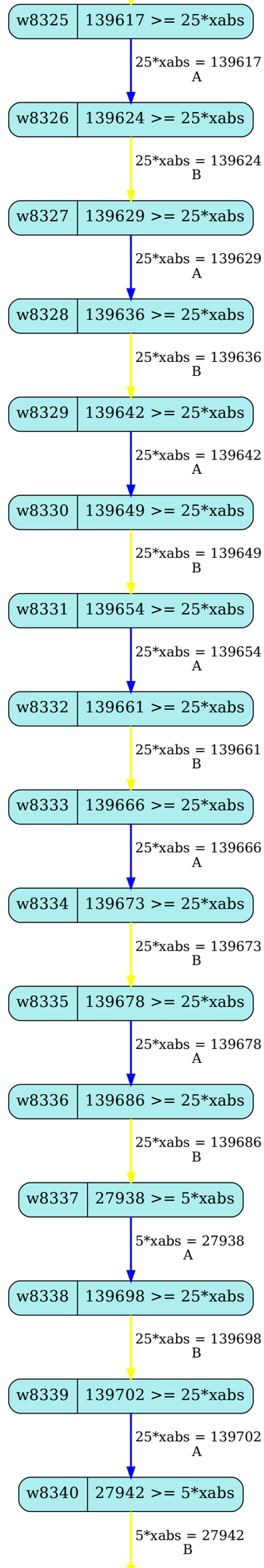
w8325
139617 >= 25*xabs
25*xabs = 139617
A
w8326
139624 >= 25*xabs
25*xabs = 139624
B
w8327
139629 >= 25*xabs
25*xabs = 139629
A
w8328
139636 >= 25*xabs
25*xabs = 139636
B
w8329
139642 >= 25*xabs
25*xabs = 139642
A
w8330
139649 >= 25*xabs
25*xabs = 139649
B
w8331
139654 >= 25*xabs
25*xabs = 139654
A
w8332
139661 >= 25*xabs
25*xabs = 139661
B
w8333
139666 >= 25*xabs
25*xabs = 139666
A
w8334
139673 >= 25*xabs
25*xabs = 139673
B
w8335
139678 >= 25*xabs
25*xabs = 139678
A
w8336
139686 >= 25*xabs
25*xabs = 139686
B
w8337
27938 >= 5*xabs
5*xabs = 27938
A
w8338
139698 >= 25*xabs
25*xabs = 139698
B
w8339
139702 >= 25*xabs
25*xabs = 139702
A
w8340
27942 >= 5*xabs
5*xabs = 27942
B

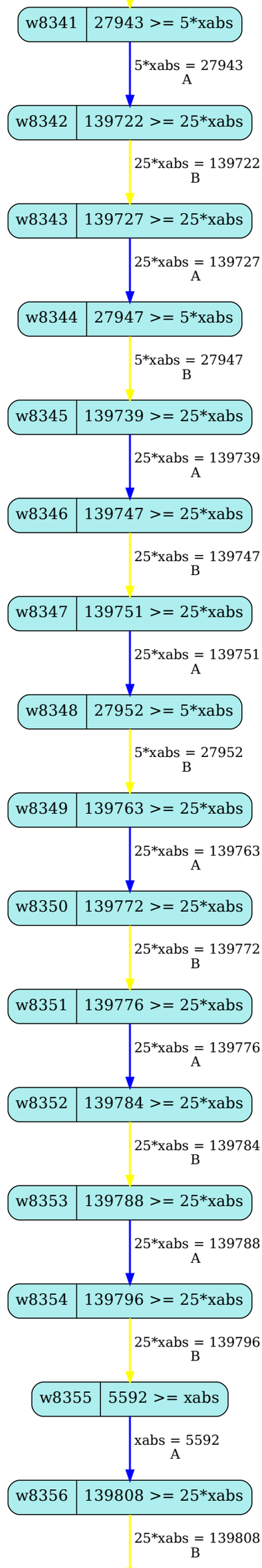
w8341
27943 >= 5*xabs
5*xabs = 27943
A
w8342
139722 >= 25*xabs
25*xabs = 139722
B
w8343
139727 >= 25*xabs
25*xabs = 139727
A
w8344
27947 >= 5*xabs
5*xabs = 27947
B
w8345
139739 >= 25*xabs
25*xabs = 139739
A
w8346
139747 >= 25*xabs
25*xabs = 139747
B
w8347
139751 >= 25*xabs
25*xabs = 139751
A
w8348
27952 >= 5*xabs
5*xabs = 27952
B
w8349
139763 >= 25*xabs
25*xabs = 139763
A
w8350
139772 >= 25*xabs
25*xabs = 139772
B
w8351
139776 >= 25*xabs
25*xabs = 139776
A
w8352
139784 >= 25*xabs
25*xabs = 139784
B
w8353
139788 >= 25*xabs
25*xabs = 139788
A
w8354
139796 >= 25*xabs
25*xabs = 139796
B
w8355
5592 >= xabs
xabs = 5592
A
w8356
139808 >= 25*xabs
25*xabs = 139808
B

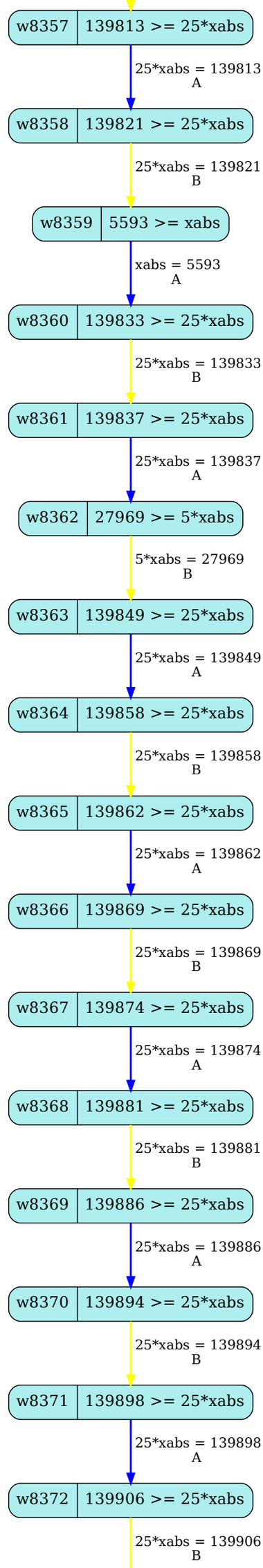
w8357
139813 >= 25*xabs
25*xabs = 139813
A
w8358
139821 >= 25*xabs
25*xabs = 139821
B
w8359
5593 >= xabs
xabs = 5593
A
w8360
139833 >= 25*xabs
25*xabs = 139833
B
w8361
139837 >= 25*xabs
25*xabs = 139837
A
w8362
27969 >= 5*xabs
5*xabs = 27969
B
w8363
139849 >= 25*xabs
25*xabs = 139849
A
w8364
139858 >= 25*xabs
25*xabs = 139858
B
w8365
139862 >= 25*xabs
25*xabs = 139862
A
w8366
139869 >= 25*xabs
25*xabs = 139869
B
w8367
139874 >= 25*xabs
25*xabs = 139874
A
w8368
139881 >= 25*xabs
25*xabs = 139881
B
w8369
139886 >= 25*xabs
25*xabs = 139886
A
w8370
139894 >= 25*xabs
25*xabs = 139894
B
w8371
139898 >= 25*xabs
25*xabs = 139898
A
w8372
139906 >= 25*xabs
25*xabs = 139906
B

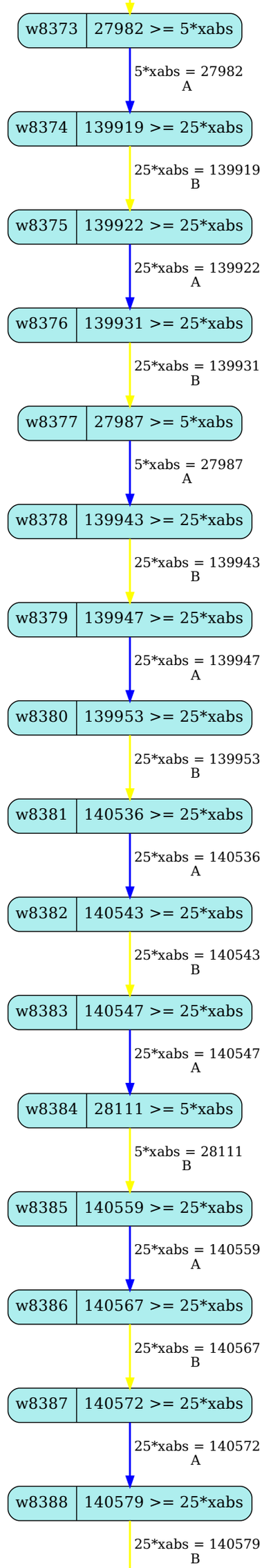
w8373
27982 >= 5*xabs
5*xabs = 27982
A
w8374
139919 >= 25*xabs
25*xabs = 139919
B
w8375
139922 >= 25*xabs
25*xabs = 139922
A
w8376
139931 >= 25*xabs
25*xabs = 139931
B
w8377
27987 >= 5*xabs
5*xabs = 27987
A
w8378
139943 >= 25*xabs
25*xabs = 139943
B
w8379
139947 >= 25*xabs
25*xabs = 139947
A
w8380
139953 >= 25*xabs
25*xabs = 139953
B
w8381
140536 >= 25*xabs
25*xabs = 140536
A
w8382
140543 >= 25*xabs
25*xabs = 140543
B
w8383
140547 >= 25*xabs
25*xabs = 140547
A
w8384
28111 >= 5*xabs
5*xabs = 28111
B
w8385
140559 >= 25*xabs
25*xabs = 140559
A
w8386
140567 >= 25*xabs
25*xabs = 140567
B
w8387
140572 >= 25*xabs
25*xabs = 140572
A
w8388
140579 >= 25*xabs
25*xabs = 140579
B

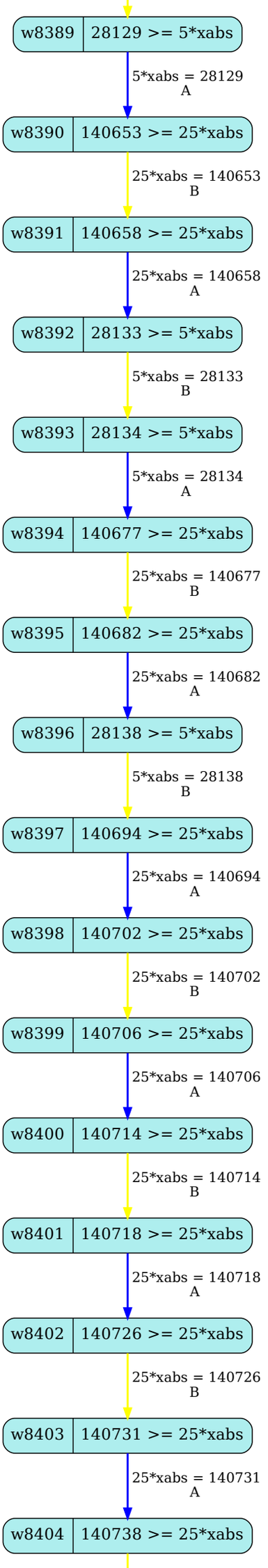
w8389
28129 >= 5*xabs
5*xabs = 28129
A
w8390
140653 >= 25*xabs
25*xabs = 140653
B
w8391
140658 >= 25*xabs
25*xabs = 140658
A
w8392
28133 >= 5*xabs
5*xabs = 28133
B
w8393
28134 >= 5*xabs
5*xabs = 28134
A
w8394
140677 >= 25*xabs
25*xabs = 140677
B
w8395
140682 >= 25*xabs
25*xabs = 140682
A
w8396
28138 >= 5*xabs
5*xabs = 28138
B
w8397
140694 >= 25*xabs
25*xabs = 140694
A
w8398
140702 >= 25*xabs
25*xabs = 140702
B
w8399
140706 >= 25*xabs
25*xabs = 140706
A
w8400
140714 >= 25*xabs
25*xabs = 140714
B
w8401
140718 >= 25*xabs
25*xabs = 140718
A
w8402
140726 >= 25*xabs
25*xabs = 140726
B
w8403
140731 >= 25*xabs
25*xabs = 140731
A
w8404
140738 >= 25*xabs

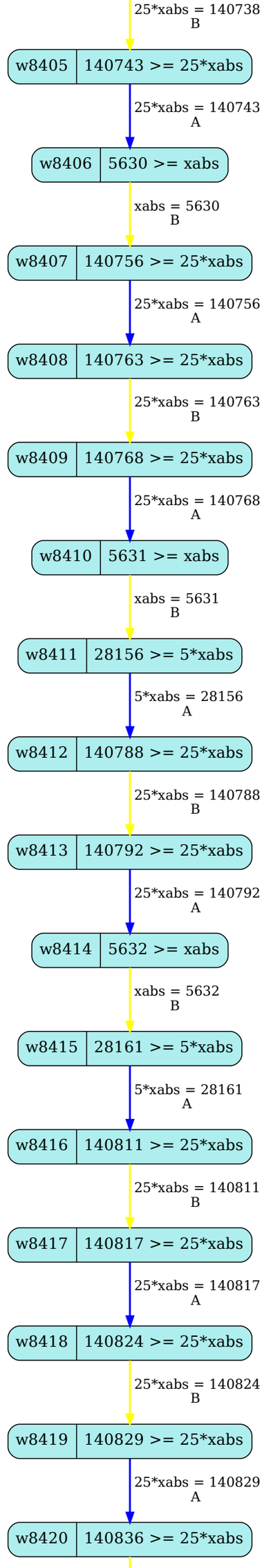
25*xabs = 140738
B
w8405
140743 >= 25*xabs
25*xabs = 140743
A
w8406
5630 >= xabs
xabs = 5630
B
w8407
140756 >= 25*xabs
25*xabs = 140756
A
w8408
140763 >= 25*xabs
25*xabs = 140763
B
w8409
140768 >= 25*xabs
25*xabs = 140768
A
w8410
5631 >= xabs
xabs = 5631
B
w8411
28156 >= 5*xabs
5*xabs = 28156
A
w8412
140788 >= 25*xabs
25*xabs = 140788
B
w8413
140792 >= 25*xabs
25*xabs = 140792
A
w8414
5632 >= xabs
xabs = 5632
B
w8415
28161 >= 5*xabs
5*xabs = 28161
A
w8416
140811 >= 25*xabs
25*xabs = 140811
B
w8417
140817 >= 25*xabs
25*xabs = 140817
A
w8418
140824 >= 25*xabs
25*xabs = 140824
B
w8419
140829 >= 25*xabs
25*xabs = 140829
A
w8420
140836 >= 25*xabs

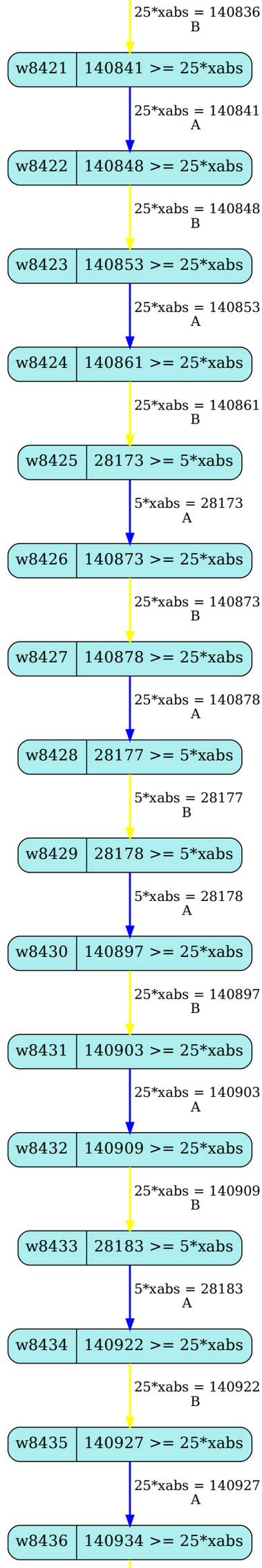
25*xabs = 140836
B
w8421
140841 >= 25*xabs
25*xabs = 140841
A
w8422
140848 >= 25*xabs
25*xabs = 140848
B
w8423
140853 >= 25*xabs
25*xabs = 140853
A
w8424
140861 >= 25*xabs
25*xabs = 140861
B
w8425
28173 >= 5*xabs
5*xabs = 28173
A
w8426
140873 >= 25*xabs
25*xabs = 140873
B
w8427
140878 >= 25*xabs
25*xabs = 140878
A
w8428
28177 >= 5*xabs
5*xabs = 28177
B
w8429
28178 >= 5*xabs
5*xabs = 28178
A
w8430
140897 >= 25*xabs
25*xabs = 140897
B
w8431
140903 >= 25*xabs
25*xabs = 140903
A
w8432
140909 >= 25*xabs
25*xabs = 140909
B
w8433
28183 >= 5*xabs
5*xabs = 28183
A
w8434
140922 >= 25*xabs
25*xabs = 140922
B
w8435
140927 >= 25*xabs
25*xabs = 140927
A
w8436
140934 >= 25*xabs

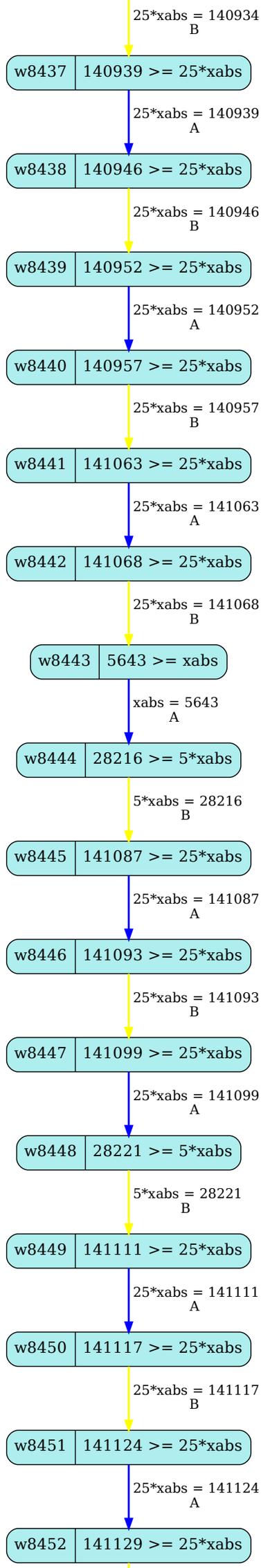
25*xabs = 140934
B
w8437
140939 >= 25*xabs
25*xabs = 140939
A
w8438
140946 >= 25*xabs
25*xabs = 140946
B
w8439
140952 >= 25*xabs
25*xabs = 140952
A
w8440
140957 >= 25*xabs
25*xabs = 140957
B
w8441
141063 >= 25*xabs
25*xabs = 141063
A
w8442
141068 >= 25*xabs
25*xabs = 141068
B
w8443
5643 >= xabs
xabs = 5643
A
w8444
28216 >= 5*xabs
5*xabs = 28216
B
w8445
141087 >= 25*xabs
25*xabs = 141087
A
w8446
141093 >= 25*xabs
25*xabs = 141093
B
w8447
141099 >= 25*xabs
25*xabs = 141099
A
w8448
28221 >= 5*xabs
5*xabs = 28221
B
w8449
141111 >= 25*xabs
25*xabs = 141111
A
w8450
141117 >= 25*xabs
25*xabs = 141117
B
w8451
141124 >= 25*xabs
25*xabs = 141124
A
w8452
141129 >= 25*xabs

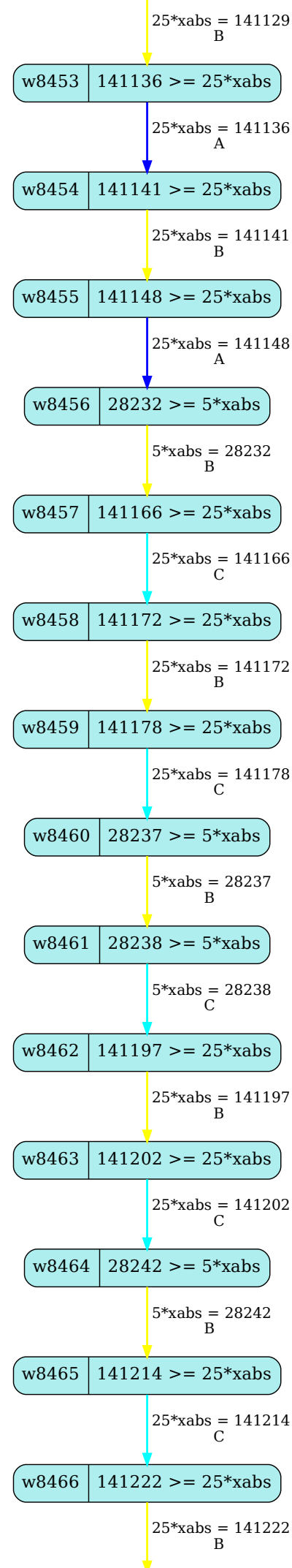
25*xabs = 141129
B
w8453
141136 >= 25*xabs
25*xabs = 141136
A
w8454
141141 >= 25*xabs
25*xabs = 141141
B
w8455
141148 >= 25*xabs
25*xabs = 141148
A
w8456
28232 >= 5*xabs
5*xabs = 28232
B
w8457
141166 >= 25*xabs
25*xabs = 141166
C
w8458
141172 >= 25*xabs
25*xabs = 141172
B
w8459
141178 >= 25*xabs
25*xabs = 141178
C
w8460
28237 >= 5*xabs
5*xabs = 28237
B
w8461
28238 >= 5*xabs
5*xabs = 28238
C
w8462
141197 >= 25*xabs
25*xabs = 141197
B
w8463
141202 >= 25*xabs
25*xabs = 141202
C
w8464
28242 >= 5*xabs
5*xabs = 28242
B
w8465
141214 >= 25*xabs
25*xabs = 141214
C
w8466
141222 >= 25*xabs
25*xabs = 141222
B

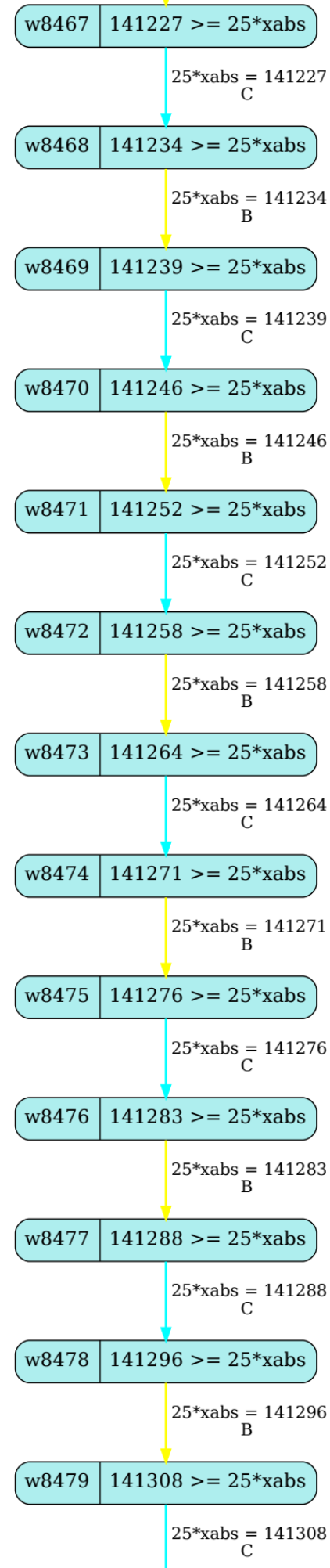
w8467
141227 >= 25*xabs
25*xabs = 141227
C
w8468
141234 >= 25*xabs
25*xabs = 141234
B
w8469
141239 >= 25*xabs
25*xabs = 141239
C
w8470
141246 >= 25*xabs
25*xabs = 141246
B
w8471
141252 >= 25*xabs
25*xabs = 141252
C
w8472
141258 >= 25*xabs
25*xabs = 141258
B
w8473
141264 >= 25*xabs
25*xabs = 141264
C
w8474
141271 >= 25*xabs
25*xabs = 141271
B
w8475
141276 >= 25*xabs
25*xabs = 141276
C
w8476
141283 >= 25*xabs
25*xabs = 141283
B
w8477
141288 >= 25*xabs
25*xabs = 141288
C
w8478
141296 >= 25*xabs
25*xabs = 141296
B
w8479
141308 >= 25*xabs
25*xabs = 141308
C

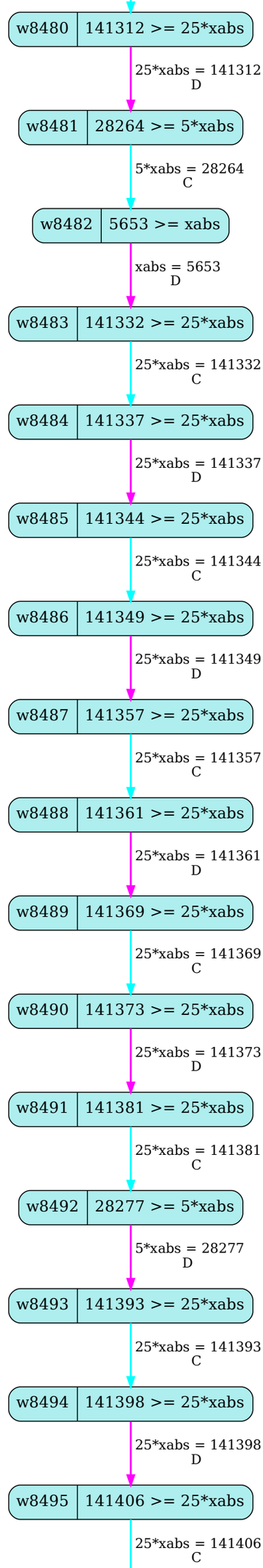
w8480
141312 >= 25*xabs
25*xabs = 141312
D
w8481
28264 >= 5*xabs
5*xabs = 28264
C
w8482
5653 >= xabs
xabs = 5653
D
w8483
141332 >= 25*xabs
25*xabs = 141332
C
w8484
141337 >= 25*xabs
25*xabs = 141337
D
w8485
141344 >= 25*xabs
25*xabs = 141344
C
w8486
141349 >= 25*xabs
25*xabs = 141349
D
w8487
141357 >= 25*xabs
25*xabs = 141357
C
w8488
141361 >= 25*xabs
25*xabs = 141361
D
w8489
141369 >= 25*xabs
25*xabs = 141369
C
w8490
141373 >= 25*xabs
25*xabs = 141373
D
w8491
141381 >= 25*xabs
25*xabs = 141381
C
w8492
28277 >= 5*xabs
5*xabs = 28277
D
w8493
141393 >= 25*xabs
25*xabs = 141393
C
w8494
141398 >= 25*xabs
25*xabs = 141398
D
w8495
141406 >= 25*xabs
25*xabs = 141406
C

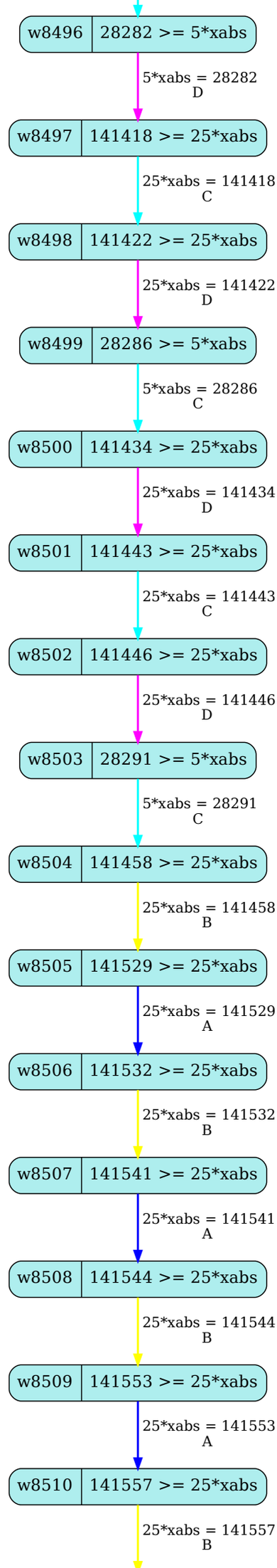
w8496
28282 >= 5*xabs
5*xabs = 28282
D
w8497
141418 >= 25*xabs
25*xabs = 141418
C
w8498
141422 >= 25*xabs
25*xabs = 141422
D
w8499
28286 >= 5*xabs
5*xabs = 28286
C
w8500
141434 >= 25*xabs
25*xabs = 141434
D
w8501
141443 >= 25*xabs
25*xabs = 141443
C
w8502
141446 >= 25*xabs
25*xabs = 141446
D
w8503
28291 >= 5*xabs
5*xabs = 28291
C
w8504
141458 >= 25*xabs
25*xabs = 141458
B
w8505
141529 >= 25*xabs
25*xabs = 141529
A
w8506
141532 >= 25*xabs
25*xabs = 141532
B
w8507
141541 >= 25*xabs
25*xabs = 141541
A
w8508
141544 >= 25*xabs
25*xabs = 141544
B
w8509
141553 >= 25*xabs
25*xabs = 141553
A
w8510
141557 >= 25*xabs
25*xabs = 141557
B

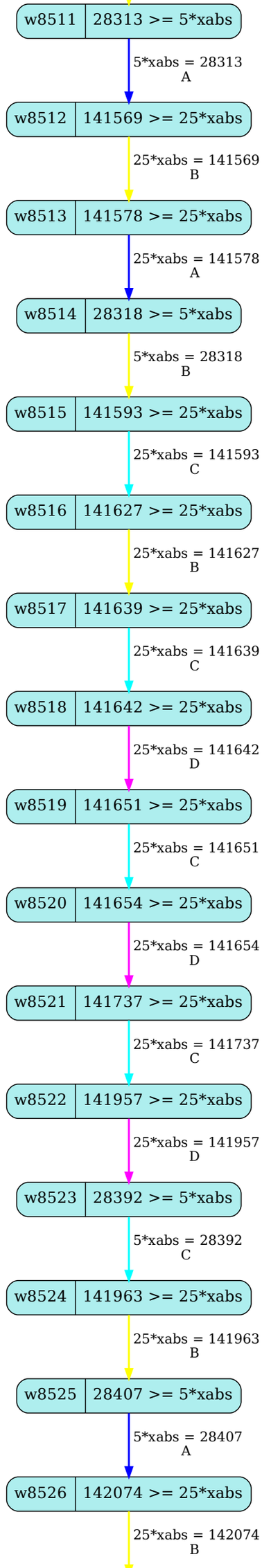
w8511
28313 >= 5*xabs
5*xabs = 28313
A
w8512
141569 >= 25*xabs
25*xabs = 141569
B
w8513
141578 >= 25*xabs
25*xabs = 141578
A
w8514
28318 >= 5*xabs
5*xabs = 28318
B
w8515
141593 >= 25*xabs
25*xabs = 141593
C
w8516
141627 >= 25*xabs
25*xabs = 141627
B
w8517
141639 >= 25*xabs
25*xabs = 141639
C
w8518
141642 >= 25*xabs
25*xabs = 141642
D
w8519
141651 >= 25*xabs
25*xabs = 141651
C
w8520
141654 >= 25*xabs
25*xabs = 141654
D
w8521
141737 >= 25*xabs
25*xabs = 141737
C
w8522
141957 >= 25*xabs
25*xabs = 141957
D
w8523
28392 >= 5*xabs
5*xabs = 28392
C
w8524
141963 >= 25*xabs
25*xabs = 141963
B
w8525
28407 >= 5*xabs
5*xabs = 28407
A
w8526
142074 >= 25*xabs
25*xabs = 142074
B

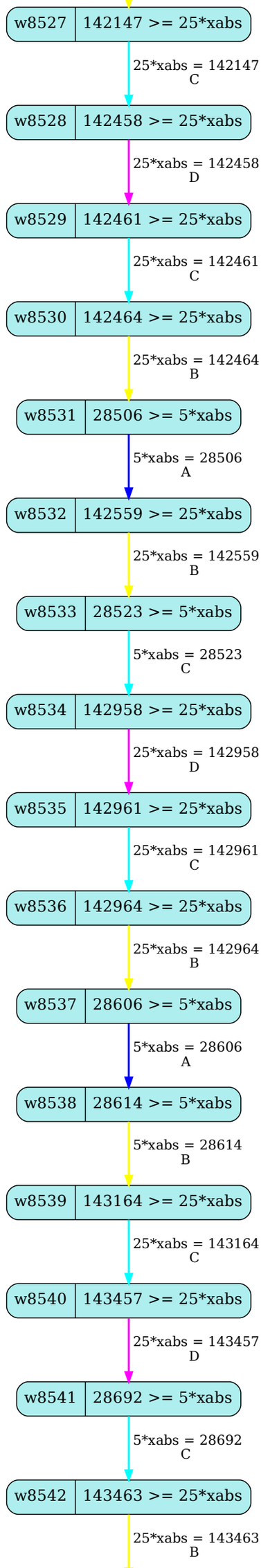
w8527
142147 >= 25*xabs
25*xabs = 142147
C
w8528
142458 >= 25*xabs
25*xabs = 142458
D
w8529
142461 >= 25*xabs
25*xabs = 142461
C
w8530
142464 >= 25*xabs
25*xabs = 142464
B
w8531
28506 >= 5*xabs
5*xabs = 28506
A
w8532
142559 >= 25*xabs
25*xabs = 142559
B
w8533
28523 >= 5*xabs
5*xabs = 28523
C
w8534
142958 >= 25*xabs
25*xabs = 142958
D
w8535
142961 >= 25*xabs
25*xabs = 142961
C
w8536
142964 >= 25*xabs
25*xabs = 142964
B
w8537
28606 >= 5*xabs
5*xabs = 28606
A
w8538
28614 >= 5*xabs
5*xabs = 28614
B
w8539
143164 >= 25*xabs
25*xabs = 143164
C
w8540
143457 >= 25*xabs
25*xabs = 143457
D
w8541
28692 >= 5*xabs
5*xabs = 28692
C
w8542
143463 >= 25*xabs
25*xabs = 143463
B

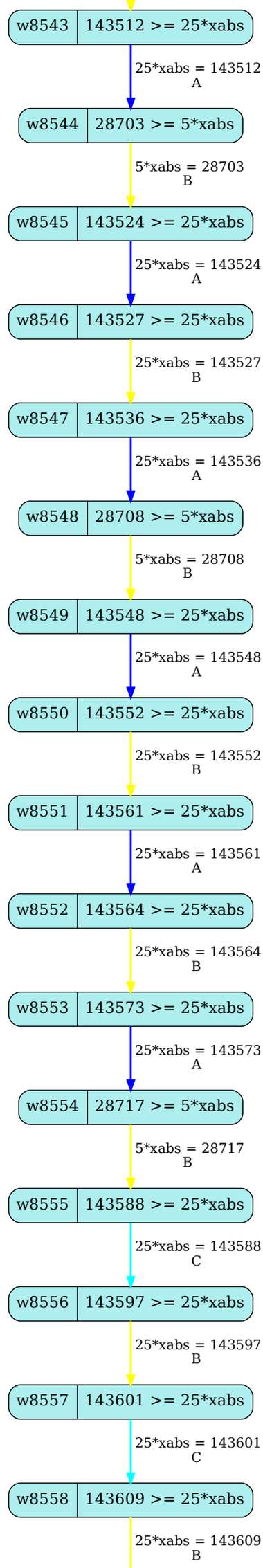
w8543
143512 >= 25*xabs
25*xabs = 143512
A
w8544
28703 >= 5*xabs
5*xabs = 28703
B
w8545
143524 >= 25*xabs
25*xabs = 143524
A
w8546
143527 >= 25*xabs
25*xabs = 143527
B
w8547
143536 >= 25*xabs
25*xabs = 143536
A
w8548
28708 >= 5*xabs
5*xabs = 28708
B
w8549
143548 >= 25*xabs
25*xabs = 143548
A
w8550
143552 >= 25*xabs
25*xabs = 143552
B
w8551
143561 >= 25*xabs
25*xabs = 143561
A
w8552
143564 >= 25*xabs
25*xabs = 143564
B
w8553
143573 >= 25*xabs
25*xabs = 143573
A
w8554
28717 >= 5*xabs
5*xabs = 28717
B
w8555
143588 >= 25*xabs
25*xabs = 143588
C
w8556
143597 >= 25*xabs
25*xabs = 143597
B
w8557
143601 >= 25*xabs
25*xabs = 143601
C
w8558
143609 >= 25*xabs
25*xabs = 143609
B

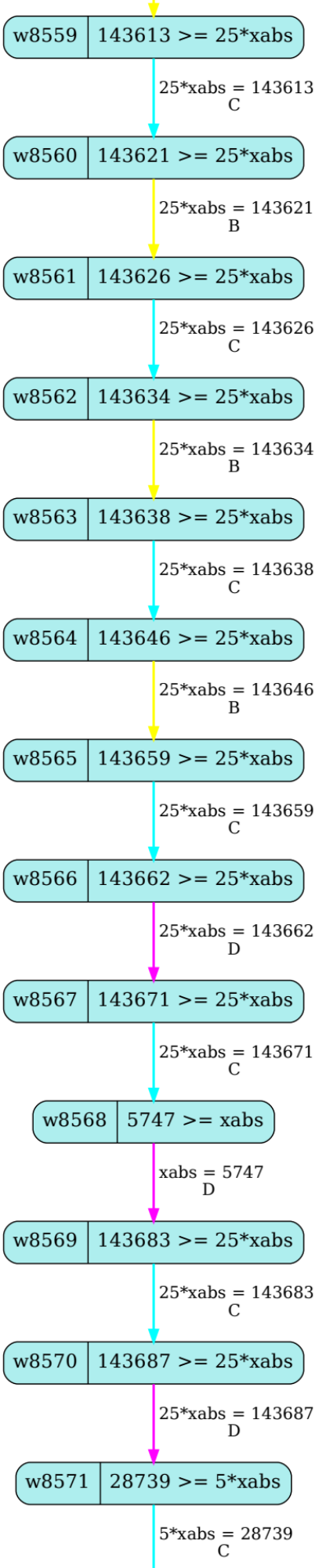
w8559
143613 >= 25*xabs
25*xabs = 143613
C
w8560
143621 >= 25*xabs
25*xabs = 143621
B
w8561
143626 >= 25*xabs
25*xabs = 143626
C
w8562
143634 >= 25*xabs
25*xabs = 143634
B
w8563
143638 >= 25*xabs
25*xabs = 143638
C
w8564
143646 >= 25*xabs
25*xabs = 143646
B
w8565
143659 >= 25*xabs
25*xabs = 143659
C
w8566
143662 >= 25*xabs
25*xabs = 143662
D
w8567
143671 >= 25*xabs
25*xabs = 143671
C
w8568
5747 >= xabs
xabs = 5747
D
w8569
143683 >= 25*xabs
25*xabs = 143683
C
w8570
143687 >= 25*xabs
25*xabs = 143687
D
w8571
28739 >= 5*xabs
5*xabs = 28739
C

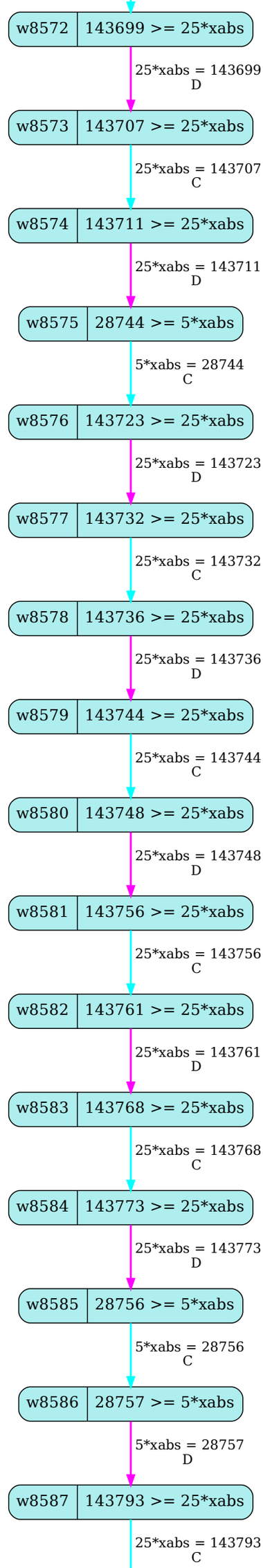
w8572
143699 >= 25*xabs
25*xabs = 143699
D
w8573
143707 >= 25*xabs
25*xabs = 143707
C
w8574
143711 >= 25*xabs
25*xabs = 143711
D
w8575
28744 >= 5*xabs
5*xabs = 28744
C
w8576
143723 >= 25*xabs
25*xabs = 143723
D
w8577
143732 >= 25*xabs
25*xabs = 143732
C
w8578
143736 >= 25*xabs
25*xabs = 143736
D
w8579
143744 >= 25*xabs
25*xabs = 143744
C
w8580
143748 >= 25*xabs
25*xabs = 143748
D
w8581
143756 >= 25*xabs
25*xabs = 143756
C
w8582
143761 >= 25*xabs
25*xabs = 143761
D
w8583
143768 >= 25*xabs
25*xabs = 143768
C
w8584
143773 >= 25*xabs
25*xabs = 143773
D
w8585
28756 >= 5*xabs
5*xabs = 28756
C
w8586
28757 >= 5*xabs
5*xabs = 28757
D
w8587
143793 >= 25*xabs
25*xabs = 143793
C

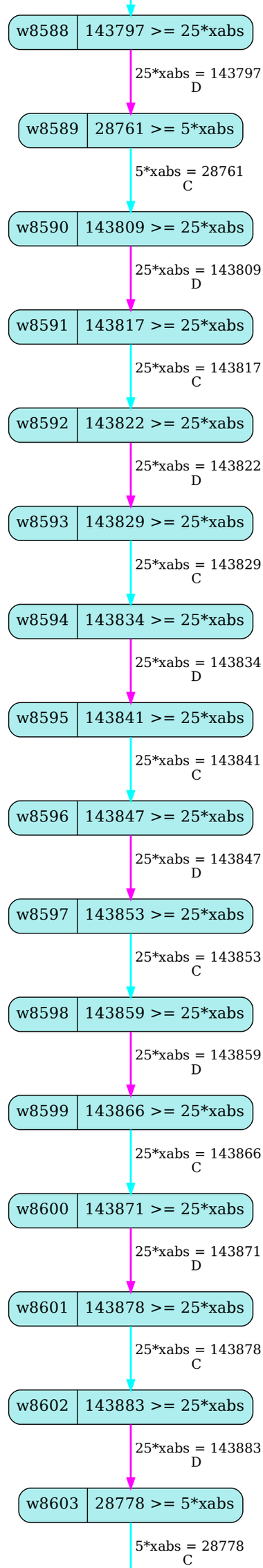
w8588
143797 >= 25*xabs
25*xabs = 143797
D
w8589
28761 >= 5*xabs
5*xabs = 28761
C
w8590
143809 >= 25*xabs
25*xabs = 143809
D
w8591
143817 >= 25*xabs
25*xabs = 143817
C
w8592
143822 >= 25*xabs
25*xabs = 143822
D
w8593
143829 >= 25*xabs
25*xabs = 143829
C
w8594
143834 >= 25*xabs
25*xabs = 143834
D
w8595
143841 >= 25*xabs
25*xabs = 143841
C
w8596
143847 >= 25*xabs
25*xabs = 143847
D
w8597
143853 >= 25*xabs
25*xabs = 143853
C
w8598
143859 >= 25*xabs
25*xabs = 143859
D
w8599
143866 >= 25*xabs
25*xabs = 143866
C
w8600
143871 >= 25*xabs
25*xabs = 143871
D
w8601
143878 >= 25*xabs
25*xabs = 143878
C
w8602
143883 >= 25*xabs
25*xabs = 143883
D
w8603
28778 >= 5*xabs
5*xabs = 28778
C

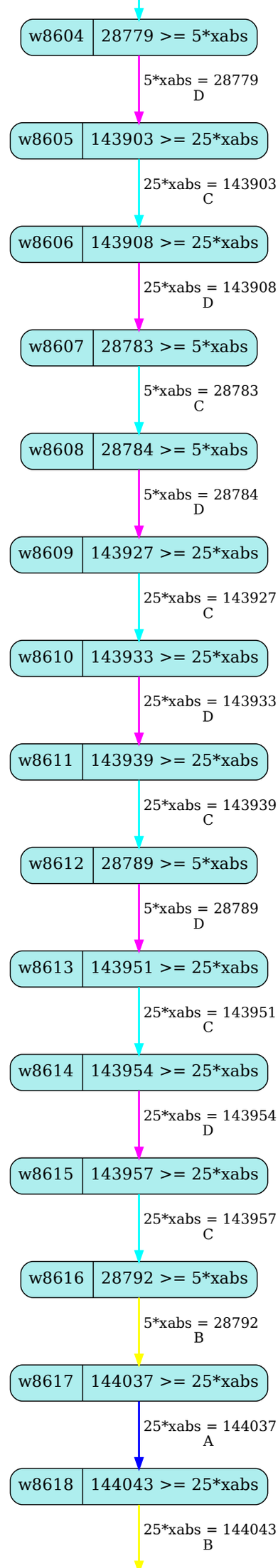
w8604
28779 >= 5*xabs
5*xabs = 28779
D
w8605
143903 >= 25*xabs
25*xabs = 143903
C
w8606
143908 >= 25*xabs
25*xabs = 143908
D
w8607
28783 >= 5*xabs
5*xabs = 28783
C
w8608
28784 >= 5*xabs
5*xabs = 28784
D
w8609
143927 >= 25*xabs
25*xabs = 143927
C
w8610
143933 >= 25*xabs
25*xabs = 143933
D
w8611
143939 >= 25*xabs
25*xabs = 143939
C
w8612
28789 >= 5*xabs
5*xabs = 28789
D
w8613
143951 >= 25*xabs
25*xabs = 143951
C
w8614
143954 >= 25*xabs
25*xabs = 143954
D
w8615
143957 >= 25*xabs
25*xabs = 143957
C
w8616
28792 >= 5*xabs
5*xabs = 28792
B
w8617
144037 >= 25*xabs
25*xabs = 144037
A
w8618
144043 >= 25*xabs
25*xabs = 144043
B

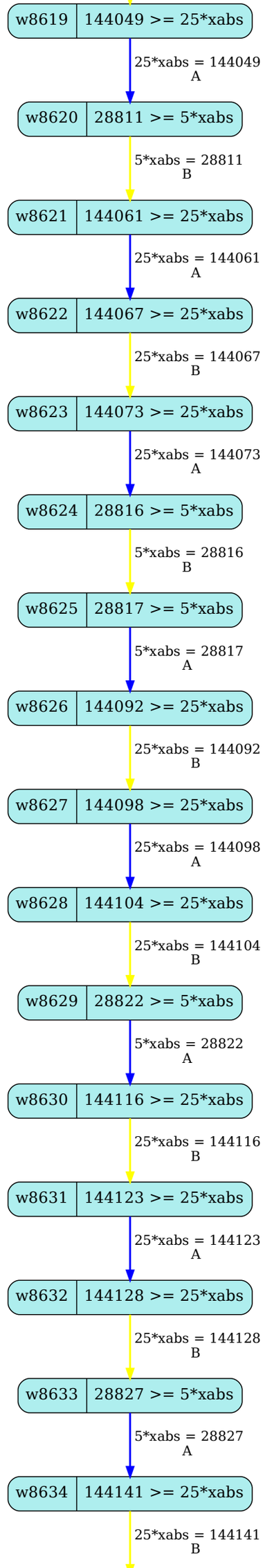
w8619
144049 >= 25*xabs
25*xabs = 144049
A
w8620
28811 >= 5*xabs
5*xabs = 28811
B
w8621
144061 >= 25*xabs
25*xabs = 144061
A
w8622
144067 >= 25*xabs
25*xabs = 144067
B
w8623
144073 >= 25*xabs
25*xabs = 144073
A
w8624
28816 >= 5*xabs
5*xabs = 28816
B
w8625
28817 >= 5*xabs
5*xabs = 28817
A
w8626
144092 >= 25*xabs
25*xabs = 144092
B
w8627
144098 >= 25*xabs
25*xabs = 144098
A
w8628
144104 >= 25*xabs
25*xabs = 144104
B
w8629
28822 >= 5*xabs
5*xabs = 28822
A
w8630
144116 >= 25*xabs
25*xabs = 144116
B
w8631
144123 >= 25*xabs
25*xabs = 144123
A
w8632
144128 >= 25*xabs
25*xabs = 144128
B
w8633
28827 >= 5*xabs
5*xabs = 28827
A
w8634
144141 >= 25*xabs
25*xabs = 144141
B

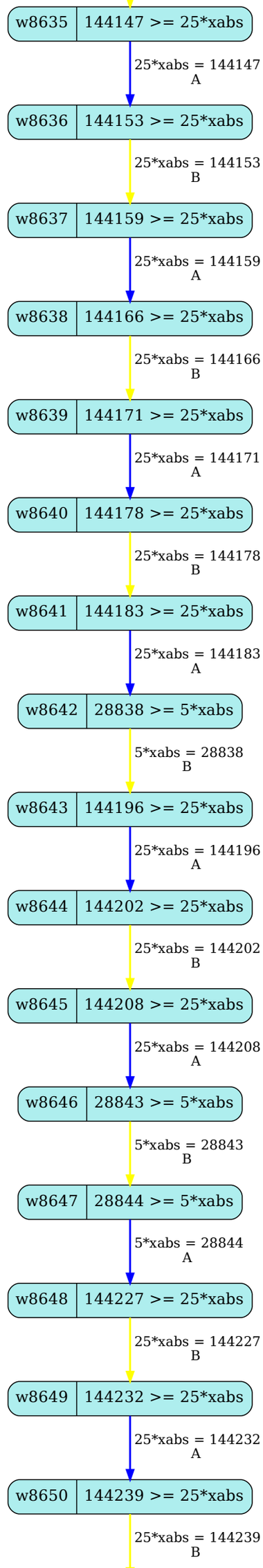
w8635
144147 >= 25*xabs
25*xabs = 144147
A
w8636
144153 >= 25*xabs
25*xabs = 144153
B
w8637
144159 >= 25*xabs
25*xabs = 144159
A
w8638
144166 >= 25*xabs
25*xabs = 144166
B
w8639
144171 >= 25*xabs
25*xabs = 144171
A
w8640
144178 >= 25*xabs
25*xabs = 144178
B
w8641
144183 >= 25*xabs
25*xabs = 144183
A
w8642
28838 >= 5*xabs
5*xabs = 28838
B
w8643
144196 >= 25*xabs
25*xabs = 144196
A
w8644
144202 >= 25*xabs
25*xabs = 144202
B
w8645
144208 >= 25*xabs
25*xabs = 144208
A
w8646
28843 >= 5*xabs
5*xabs = 28843
B
w8647
28844 >= 5*xabs
5*xabs = 28844
A
w8648
144227 >= 25*xabs
25*xabs = 144227
B
w8649
144232 >= 25*xabs
25*xabs = 144232
A
w8650
144239 >= 25*xabs
25*xabs = 144239
B

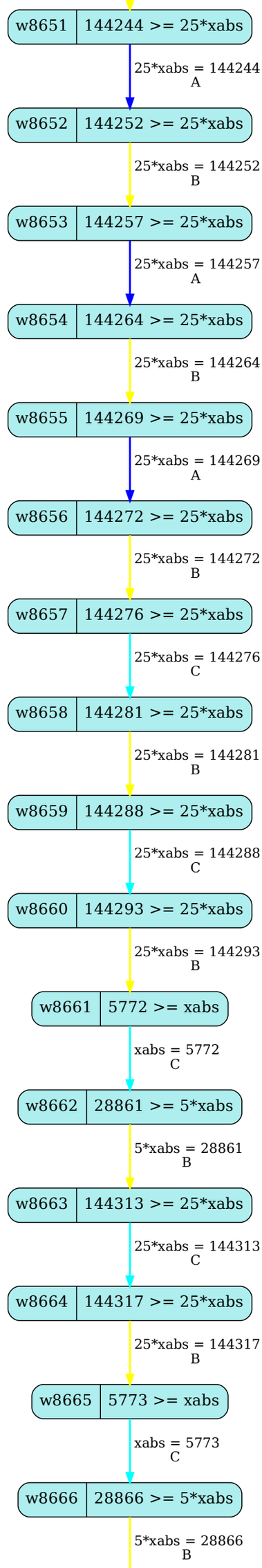
w8651
144244 >= 25*xabs
25*xabs = 144244
A
w8652
144252 >= 25*xabs
25*xabs = 144252
B
w8653
144257 >= 25*xabs
25*xabs = 144257
A
w8654
144264 >= 25*xabs
25*xabs = 144264
B
w8655
144269 >= 25*xabs
25*xabs = 144269
A
w8656
144272 >= 25*xabs
25*xabs = 144272
B
w8657
144276 >= 25*xabs
25*xabs = 144276
C
w8658
144281 >= 25*xabs
25*xabs = 144281
B
w8659
144288 >= 25*xabs
25*xabs = 144288
C
w8660
144293 >= 25*xabs
25*xabs = 144293
B
w8661
5772 >= xabs
xabs = 5772
C
w8662
28861 >= 5*xabs
5*xabs = 28861
B
w8663
144313 >= 25*xabs
25*xabs = 144313
C
w8664
144317 >= 25*xabs
25*xabs = 144317
B
w8665
5773 >= xabs
xabs = 5773
C
w8666
28866 >= 5*xabs
5*xabs = 28866
B

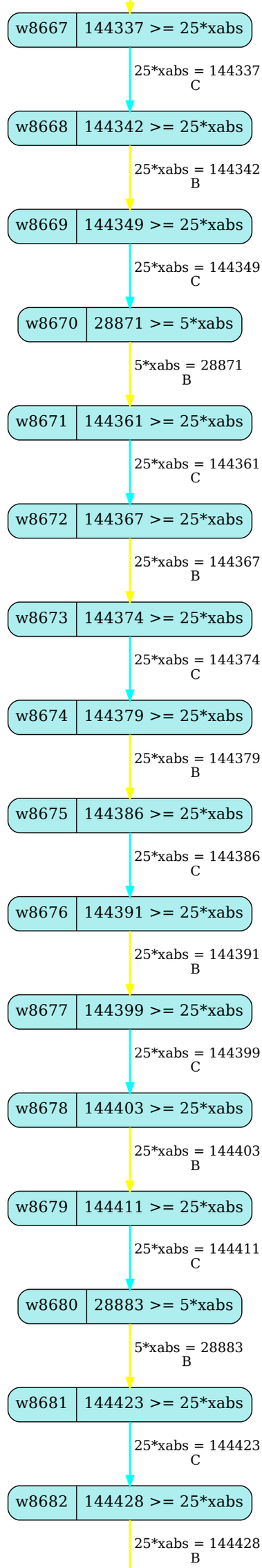
w8667
144337 >= 25*xabs
25*xabs = 144337
C
w8668
144342 >= 25*xabs
25*xabs = 144342
B
w8669
144349 >= 25*xabs
25*xabs = 144349
C
w8670
28871 >= 5*xabs
5*xabs = 28871
B
w8671
144361 >= 25*xabs
25*xabs = 144361
C
w8672
144367 >= 25*xabs
25*xabs = 144367
B
w8673
144374 >= 25*xabs
25*xabs = 144374
C
w8674
144379 >= 25*xabs
25*xabs = 144379
B
w8675
144386 >= 25*xabs
25*xabs = 144386
C
w8676
144391 >= 25*xabs
25*xabs = 144391
B
w8677
144399 >= 25*xabs
25*xabs = 144399
C
w8678
144403 >= 25*xabs
25*xabs = 144403
B
w8679
144411 >= 25*xabs
25*xabs = 144411
C
w8680
28883 >= 5*xabs
5*xabs = 28883
B
w8681
144423 >= 25*xabs
25*xabs = 144423
C
w8682
144428 >= 25*xabs
25*xabs = 144428
B

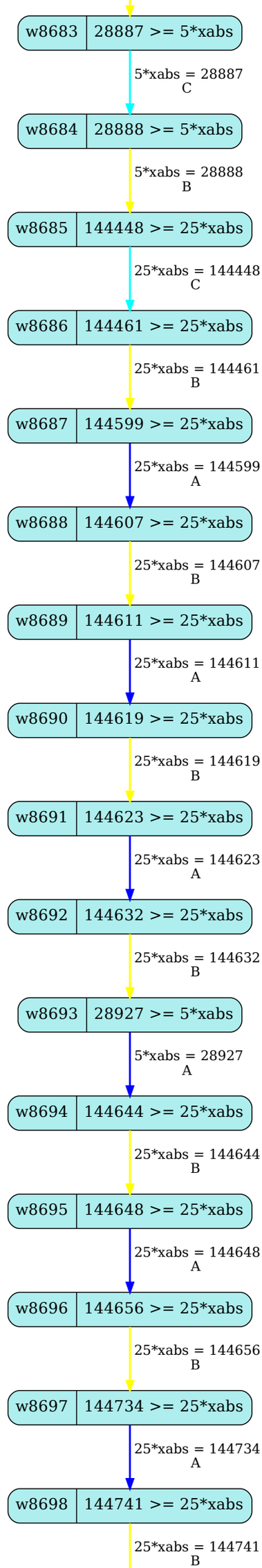
w8683
28887 >= 5*xabs
5*xabs = 28887
C
w8684
28888 >= 5*xabs
5*xabs = 28888
B
w8685
144448 >= 25*xabs
25*xabs = 144448
C
w8686
144461 >= 25*xabs
25*xabs = 144461
B
w8687
144599 >= 25*xabs
25*xabs = 144599
A
w8688
144607 >= 25*xabs
25*xabs = 144607
B
w8689
144611 >= 25*xabs
25*xabs = 144611
A
w8690
144619 >= 25*xabs
25*xabs = 144619
B
w8691
144623 >= 25*xabs
25*xabs = 144623
A
w8692
144632 >= 25*xabs
25*xabs = 144632
B
w8693
28927 >= 5*xabs
5*xabs = 28927
A
w8694
144644 >= 25*xabs
25*xabs = 144644
B
w8695
144648 >= 25*xabs
25*xabs = 144648
A
w8696
144656 >= 25*xabs
25*xabs = 144656
B
w8697
144734 >= 25*xabs
25*xabs = 144734
A
w8698
144741 >= 25*xabs
25*xabs = 144741
B

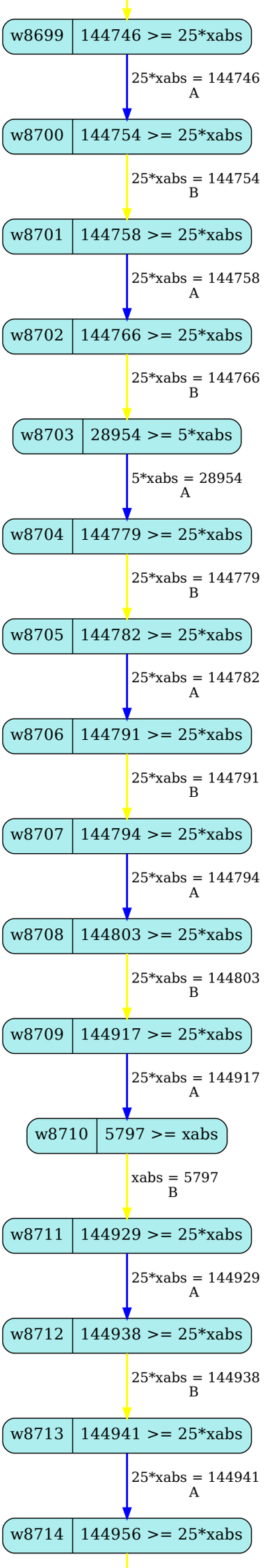
w8699
144746 >= 25*xabs
25*xabs = 144746
A
w8700
144754 >= 25*xabs
25*xabs = 144754
B
w8701
144758 >= 25*xabs
25*xabs = 144758
A
w8702
144766 >= 25*xabs
25*xabs = 144766
B
w8703
28954 >= 5*xabs
5*xabs = 28954
A
w8704
144779 >= 25*xabs
25*xabs = 144779
B
w8705
144782 >= 25*xabs
25*xabs = 144782
A
w8706
144791 >= 25*xabs
25*xabs = 144791
B
w8707
144794 >= 25*xabs
25*xabs = 144794
A
w8708
144803 >= 25*xabs
25*xabs = 144803
B
w8709
144917 >= 25*xabs
25*xabs = 144917
A
w8710
5797 >= xabs
xabs = 5797
B
w8711
144929 >= 25*xabs
25*xabs = 144929
A
w8712
144938 >= 25*xabs
25*xabs = 144938
B
w8713
144941 >= 25*xabs
25*xabs = 144941
A
w8714
144956 >= 25*xabs

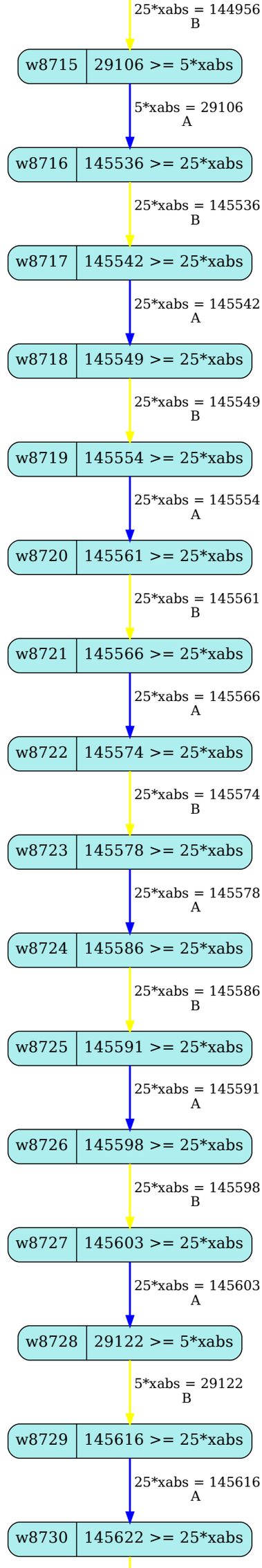
25*xabs = 144956
B
w8715
29106 >= 5*xabs
5*xabs = 29106
A
w8716
145536 >= 25*xabs
25*xabs = 145536
B
w8717
145542 >= 25*xabs
25*xabs = 145542
A
w8718
145549 >= 25*xabs
25*xabs = 145549
B
w8719
145554 >= 25*xabs
25*xabs = 145554
A
w8720
145561 >= 25*xabs
25*xabs = 145561
B
w8721
145566 >= 25*xabs
25*xabs = 145566
A
w8722
145574 >= 25*xabs
25*xabs = 145574
B
w8723
145578 >= 25*xabs
25*xabs = 145578
A
w8724
145586 >= 25*xabs
25*xabs = 145586
B
w8725
145591 >= 25*xabs
25*xabs = 145591
A
w8726
145598 >= 25*xabs
25*xabs = 145598
B
w8727
145603 >= 25*xabs
25*xabs = 145603
A
w8728
29122 >= 5*xabs
5*xabs = 29122
B
w8729
145616 >= 25*xabs
25*xabs = 145616
A
w8730
145622 >= 25*xabs

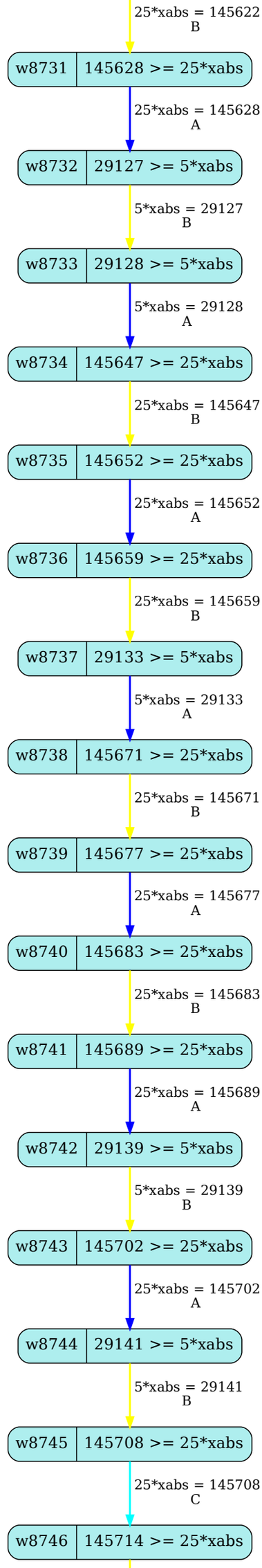
25*xabs = 145622
B
w8731
145628 >= 25*xabs
25*xabs = 145628
A
w8732
29127 >= 5*xabs
5*xabs = 29127
B
w8733
29128 >= 5*xabs
5*xabs = 29128
A
w8734
145647 >= 25*xabs
25*xabs = 145647
B
w8735
145652 >= 25*xabs
25*xabs = 145652
A
w8736
145659 >= 25*xabs
25*xabs = 145659
B
w8737
29133 >= 5*xabs
5*xabs = 29133
A
w8738
145671 >= 25*xabs
25*xabs = 145671
B
w8739
145677 >= 25*xabs
25*xabs = 145677
A
w8740
145683 >= 25*xabs
25*xabs = 145683
B
w8741
145689 >= 25*xabs
25*xabs = 145689
A
w8742
29139 >= 5*xabs
5*xabs = 29139
B
w8743
145702 >= 25*xabs
25*xabs = 145702
A
w8744
29141 >= 5*xabs
5*xabs = 29141
B
w8745
145708 >= 25*xabs
25*xabs = 145708
C
w8746
145714 >= 25*xabs

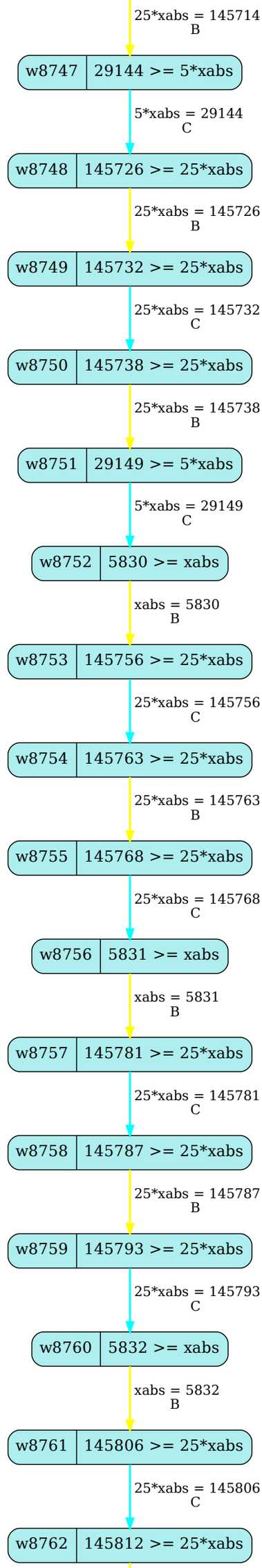
25*xabs = 145714
B
w8747
29144 >= 5*xabs
5*xabs = 29144
C
w8748
145726 >= 25*xabs
25*xabs = 145726
B
w8749
145732 >= 25*xabs
25*xabs = 145732
C
w8750
145738 >= 25*xabs
25*xabs = 145738
B
w8751
29149 >= 5*xabs
5*xabs = 29149
C
w8752
5830 >= xabs
xabs = 5830
B
w8753
145756 >= 25*xabs
25*xabs = 145756
C
w8754
145763 >= 25*xabs
25*xabs = 145763
B
w8755
145768 >= 25*xabs
25*xabs = 145768
C
w8756
5831 >= xabs
xabs = 5831
B
w8757
145781 >= 25*xabs
25*xabs = 145781
C
w8758
145787 >= 25*xabs
25*xabs = 145787
B
w8759
145793 >= 25*xabs
25*xabs = 145793
C
w8760
5832 >= xabs
xabs = 5832
B
w8761
145806 >= 25*xabs
25*xabs = 145806
C
w8762
145812 >= 25*xabs

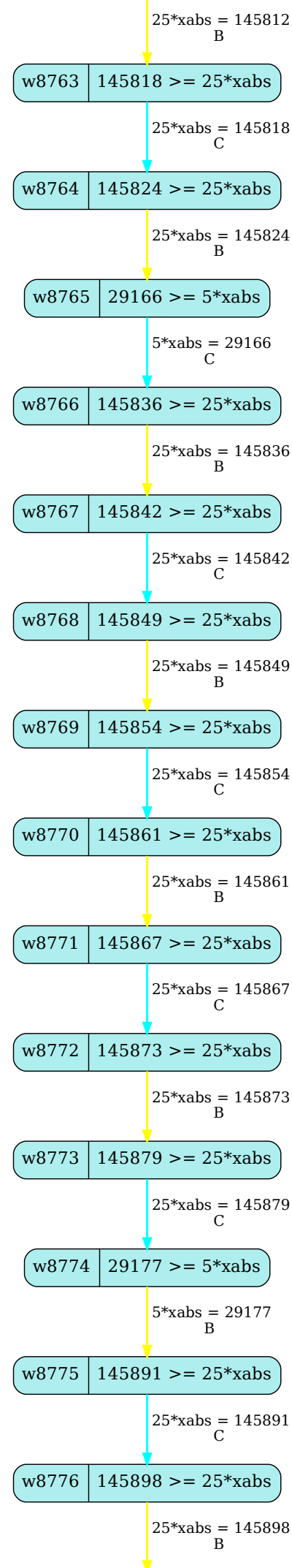
25*xabs = 145812
B
w8763
145818 >= 25*xabs
25*xabs = 145818
C
w8764
145824 >= 25*xabs
25*xabs = 145824
B
w8765
29166 >= 5*xabs
5*xabs = 29166
C
w8766
145836 >= 25*xabs
25*xabs = 145836
B
w8767
145842 >= 25*xabs
25*xabs = 145842
C
w8768
145849 >= 25*xabs
25*xabs = 145849
B
w8769
145854 >= 25*xabs
25*xabs = 145854
C
w8770
145861 >= 25*xabs
25*xabs = 145861
B
w8771
145867 >= 25*xabs
25*xabs = 145867
C
w8772
145873 >= 25*xabs
25*xabs = 145873
B
w8773
145879 >= 25*xabs
25*xabs = 145879
C
w8774
29177 >= 5*xabs
5*xabs = 29177
B
w8775
145891 >= 25*xabs
25*xabs = 145891
C
w8776
145898 >= 25*xabs
25*xabs = 145898
B

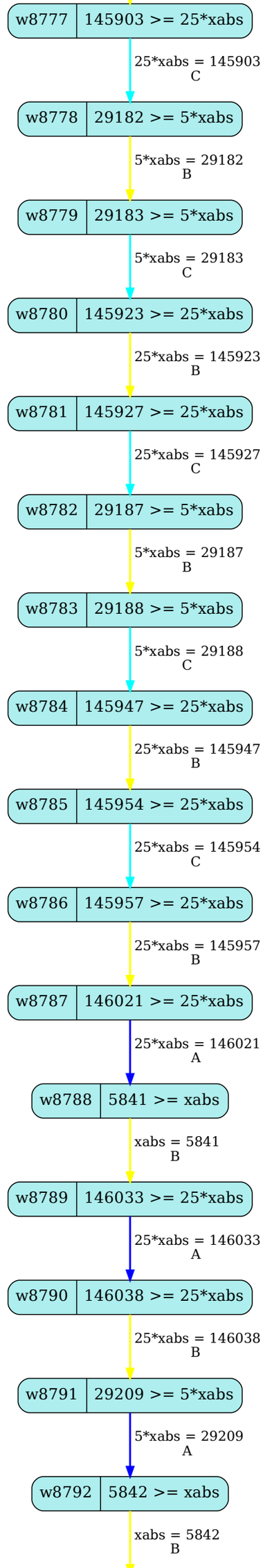
w8777
145903 >= 25*xabs
25*xabs = 145903
C
w8778
29182 >= 5*xabs
5*xabs = 29182
B
w8779
29183 >= 5*xabs
5*xabs = 29183
C
w8780
145923 >= 25*xabs
25*xabs = 145923
B
w8781
145927 >= 25*xabs
25*xabs = 145927
C
w8782
29187 >= 5*xabs
5*xabs = 29187
B
w8783
29188 >= 5*xabs
5*xabs = 29188
C
w8784
145947 >= 25*xabs
25*xabs = 145947
B
w8785
145954 >= 25*xabs
25*xabs = 145954
C
w8786
145957 >= 25*xabs
25*xabs = 145957
B
w8787
146021 >= 25*xabs
25*xabs = 146021
A
w8788
5841 >= xabs
xabs = 5841
B
w8789
146033 >= 25*xabs
25*xabs = 146033
A
w8790
146038 >= 25*xabs
25*xabs = 146038
B
w8791
29209 >= 5*xabs
5*xabs = 29209
A
w8792
5842 >= xabs
xabs = 5842
B

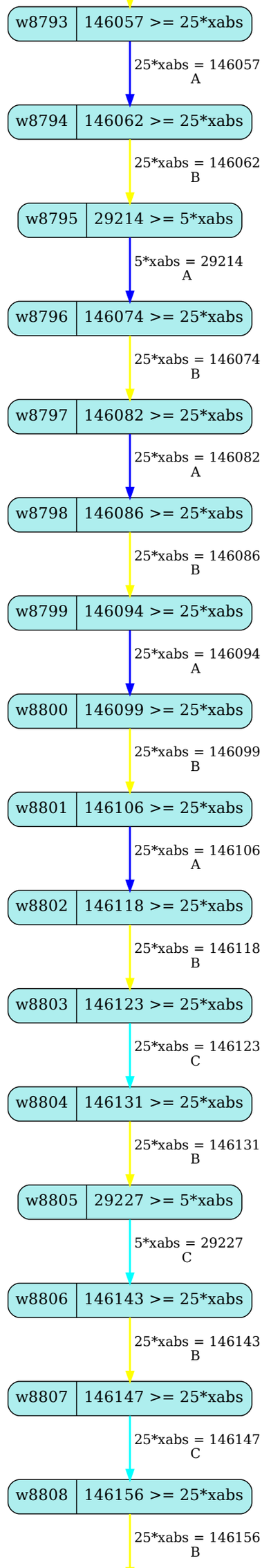
w8793
146057 >= 25*xabs
25*xabs = 146057
A
w8794
146062 >= 25*xabs
25*xabs = 146062
B
w8795
29214 >= 5*xabs
5*xabs = 29214
A
w8796
146074 >= 25*xabs
25*xabs = 146074
B
w8797
146082 >= 25*xabs
25*xabs = 146082
A
w8798
146086 >= 25*xabs
25*xabs = 146086
B
w8799
146094 >= 25*xabs
25*xabs = 146094
A
w8800
146099 >= 25*xabs
25*xabs = 146099
B
w8801
146106 >= 25*xabs
25*xabs = 146106
A
w8802
146118 >= 25*xabs
25*xabs = 146118
B
w8803
146123 >= 25*xabs
25*xabs = 146123
C
w8804
146131 >= 25*xabs
25*xabs = 146131
B
w8805
29227 >= 5*xabs
5*xabs = 29227
C
w8806
146143 >= 25*xabs
25*xabs = 146143
B
w8807
146147 >= 25*xabs
25*xabs = 146147
C
w8808
146156 >= 25*xabs
25*xabs = 146156
B

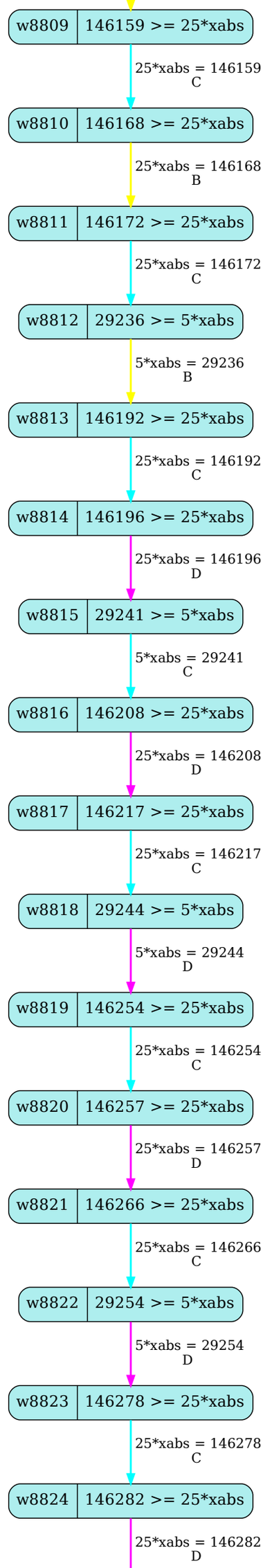
w8809
146159 >= 25*xabs
25*xabs = 146159
C
w8810
146168 >= 25*xabs
25*xabs = 146168
B
w8811
146172 >= 25*xabs
25*xabs = 146172
C
w8812
29236 >= 5*xabs
5*xabs = 29236
B
w8813
146192 >= 25*xabs
25*xabs = 146192
C
w8814
146196 >= 25*xabs
25*xabs = 146196
D
w8815
29241 >= 5*xabs
5*xabs = 29241
C
w8816
146208 >= 25*xabs
25*xabs = 146208
D
w8817
146217 >= 25*xabs
25*xabs = 146217
C
w8818
29244 >= 5*xabs
5*xabs = 29244
D
w8819
146254 >= 25*xabs
25*xabs = 146254
C
w8820
146257 >= 25*xabs
25*xabs = 146257
D
w8821
146266 >= 25*xabs
25*xabs = 146266
C
w8822
29254 >= 5*xabs
5*xabs = 29254
D
w8823
146278 >= 25*xabs
25*xabs = 146278
C
w8824
146282 >= 25*xabs
25*xabs = 146282
D

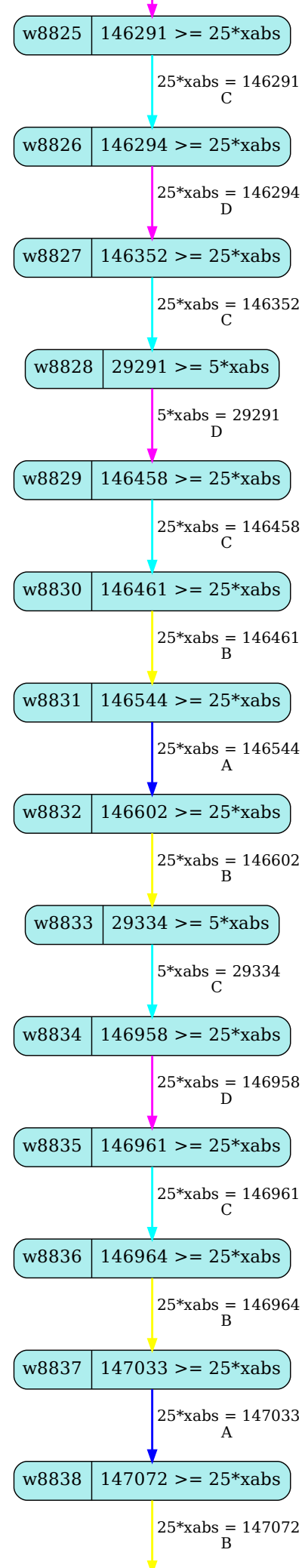
w8825
146291 >= 25*xabs
25*xabs = 146291
C
w8826
146294 >= 25*xabs
25*xabs = 146294
D
w8827
146352 >= 25*xabs
25*xabs = 146352
C
w8828
29291 >= 5*xabs
5*xabs = 29291
D
w8829
146458 >= 25*xabs
25*xabs = 146458
C
w8830
146461 >= 25*xabs
25*xabs = 146461
B
w8831
146544 >= 25*xabs
25*xabs = 146544
A
w8832
146602 >= 25*xabs
25*xabs = 146602
B
w8833
29334 >= 5*xabs
5*xabs = 29334
C
w8834
146958 >= 25*xabs
25*xabs = 146958
D
w8835
146961 >= 25*xabs
25*xabs = 146961
C
w8836
146964 >= 25*xabs
25*xabs = 146964
B
w8837
147033 >= 25*xabs
25*xabs = 147033
A
w8838
147072 >= 25*xabs
25*xabs = 147072
B

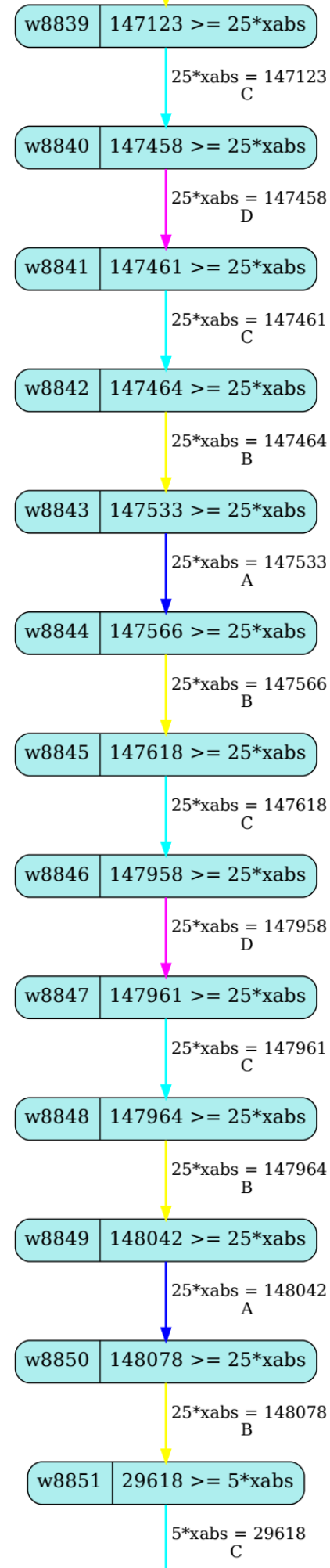
w8839
147123 >= 25*xabs
25*xabs = 147123
C
w8840
147458 >= 25*xabs
25*xabs = 147458
D
w8841
147461 >= 25*xabs
25*xabs = 147461
C
w8842
147464 >= 25*xabs
25*xabs = 147464
B
w8843
147533 >= 25*xabs
25*xabs = 147533
A
w8844
147566 >= 25*xabs
25*xabs = 147566
B
w8845
147618 >= 25*xabs
25*xabs = 147618
C
w8846
147958 >= 25*xabs
25*xabs = 147958
D
w8847
147961 >= 25*xabs
25*xabs = 147961
C
w8848
147964 >= 25*xabs
25*xabs = 147964
B
w8849
148042 >= 25*xabs
25*xabs = 148042
A
w8850
148078 >= 25*xabs
25*xabs = 148078
B
w8851
29618 >= 5*xabs
5*xabs = 29618
C

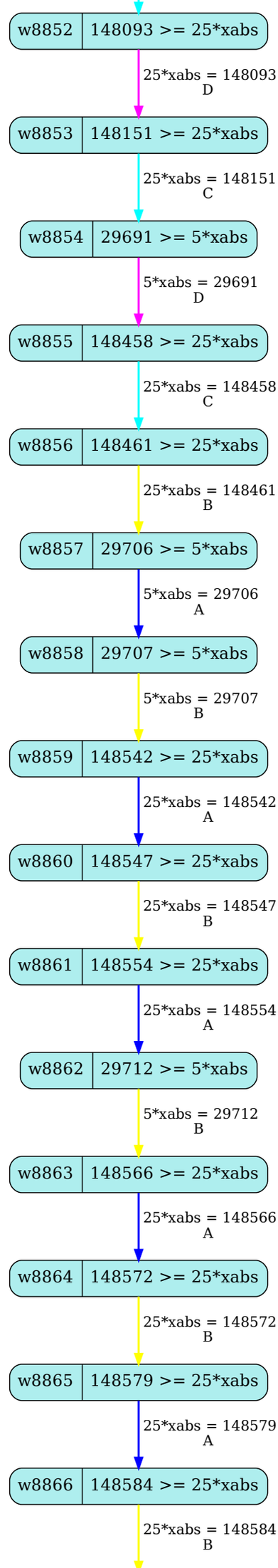
w8852
148093 >= 25*xabs
25*xabs = 148093
D
w8853
148151 >= 25*xabs
25*xabs = 148151
C
w8854
29691 >= 5*xabs
5*xabs = 29691
D
w8855
148458 >= 25*xabs
25*xabs = 148458
C
w8856
148461 >= 25*xabs
25*xabs = 148461
B
w8857
29706 >= 5*xabs
5*xabs = 29706
A
w8858
29707 >= 5*xabs
5*xabs = 29707
B
w8859
148542 >= 25*xabs
25*xabs = 148542
A
w8860
148547 >= 25*xabs
25*xabs = 148547
B
w8861
148554 >= 25*xabs
25*xabs = 148554
A
w8862
29712 >= 5*xabs
5*xabs = 29712
B
w8863
148566 >= 25*xabs
25*xabs = 148566
A
w8864
148572 >= 25*xabs
25*xabs = 148572
B
w8865
148579 >= 25*xabs
25*xabs = 148579
A
w8866
148584 >= 25*xabs
25*xabs = 148584
B

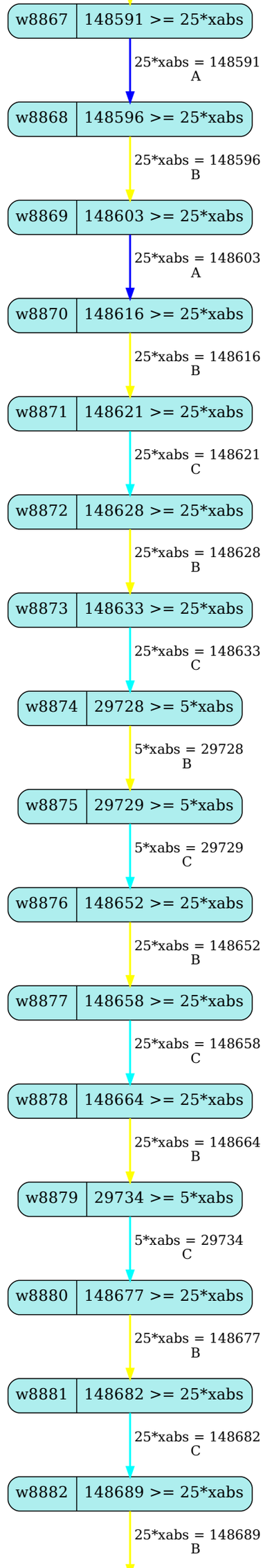
w8867
148591 >= 25*xabs
25*xabs = 148591
A
w8868
148596 >= 25*xabs
25*xabs = 148596
B
w8869
148603 >= 25*xabs
25*xabs = 148603
A
w8870
148616 >= 25*xabs
25*xabs = 148616
B
w8871
148621 >= 25*xabs
25*xabs = 148621
C
w8872
148628 >= 25*xabs
25*xabs = 148628
B
w8873
148633 >= 25*xabs
25*xabs = 148633
C
w8874
29728 >= 5*xabs
5*xabs = 29728
B
w8875
29729 >= 5*xabs
5*xabs = 29729
C
w8876
148652 >= 25*xabs
25*xabs = 148652
B
w8877
148658 >= 25*xabs
25*xabs = 148658
C
w8878
148664 >= 25*xabs
25*xabs = 148664
B
w8879
29734 >= 5*xabs
5*xabs = 29734
C
w8880
148677 >= 25*xabs
25*xabs = 148677
B
w8881
148682 >= 25*xabs
25*xabs = 148682
C
w8882
148689 >= 25*xabs
25*xabs = 148689
B

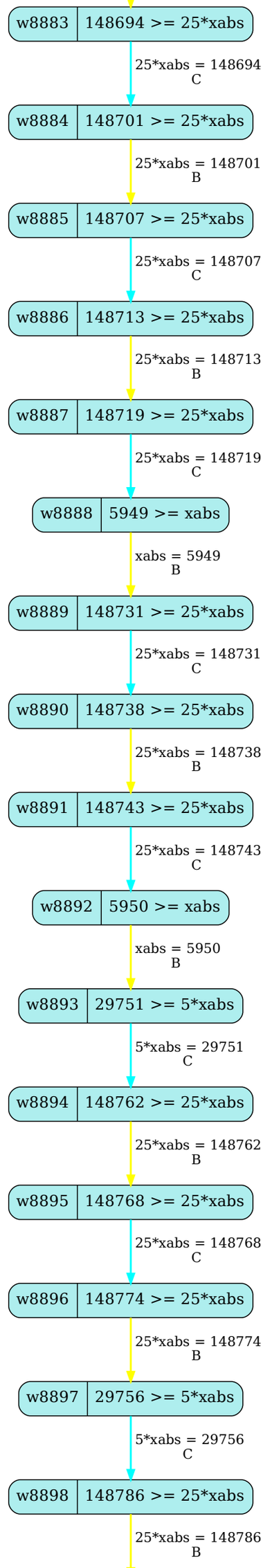
w8883
148694 >= 25*xabs
25*xabs = 148694
C
w8884
148701 >= 25*xabs
25*xabs = 148701
B
w8885
148707 >= 25*xabs
25*xabs = 148707
C
w8886
148713 >= 25*xabs
25*xabs = 148713
B
w8887
148719 >= 25*xabs
25*xabs = 148719
C
w8888
5949 >= xabs
xabs = 5949
B
w8889
148731 >= 25*xabs
25*xabs = 148731
C
w8890
148738 >= 25*xabs
25*xabs = 148738
B
w8891
148743 >= 25*xabs
25*xabs = 148743
C
w8892
5950 >= xabs
xabs = 5950
B
w8893
29751 >= 5*xabs
5*xabs = 29751
C
w8894
148762 >= 25*xabs
25*xabs = 148762
B
w8895
148768 >= 25*xabs
25*xabs = 148768
C
w8896
148774 >= 25*xabs
25*xabs = 148774
B
w8897
29756 >= 5*xabs
5*xabs = 29756
C
w8898
148786 >= 25*xabs
25*xabs = 148786
B

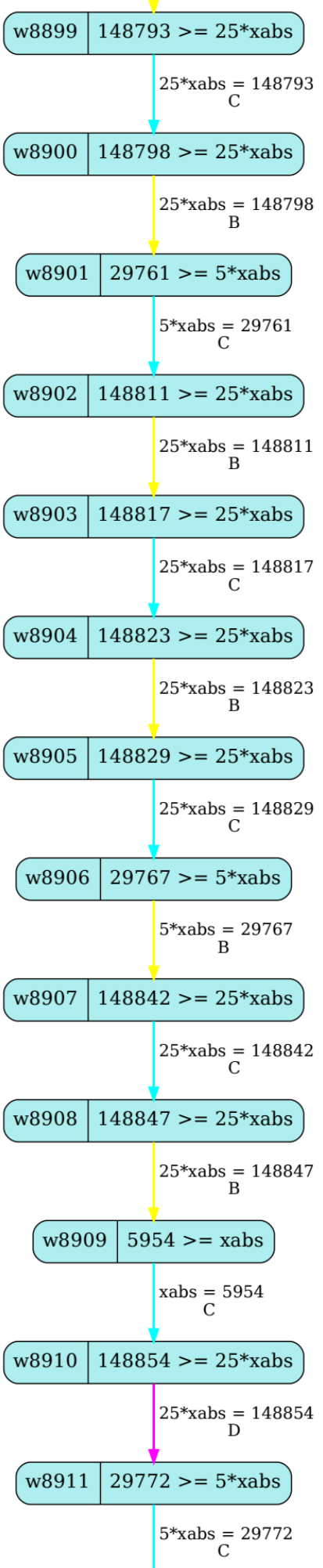
w8899
148793 >= 25*xabs
25*xabs = 148793
C
w8900
148798 >= 25*xabs
25*xabs = 148798
B
w8901
29761 >= 5*xabs
5*xabs = 29761
C
w8902
148811 >= 25*xabs
25*xabs = 148811
B
w8903
148817 >= 25*xabs
25*xabs = 148817
C
w8904
148823 >= 25*xabs
25*xabs = 148823
B
w8905
148829 >= 25*xabs
25*xabs = 148829
C
w8906
29767 >= 5*xabs
5*xabs = 29767
B
w8907
148842 >= 25*xabs
25*xabs = 148842
C
w8908
148847 >= 25*xabs
25*xabs = 148847
B
w8909
5954 >= xabs
xabs = 5954
C
w8910
148854 >= 25*xabs
25*xabs = 148854
D
w8911
29772 >= 5*xabs
5*xabs = 29772
C

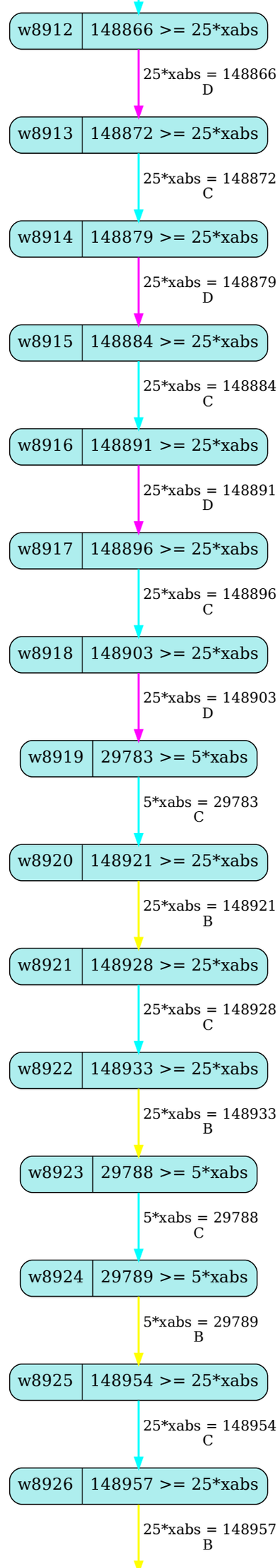
w8912
148866 >= 25*xabs
25*xabs = 148866
D
w8913
148872 >= 25*xabs
25*xabs = 148872
C
w8914
148879 >= 25*xabs
25*xabs = 148879
D
w8915
148884 >= 25*xabs
25*xabs = 148884
C
w8916
148891 >= 25*xabs
25*xabs = 148891
D
w8917
148896 >= 25*xabs
25*xabs = 148896
C
w8918
148903 >= 25*xabs
25*xabs = 148903
D
w8919
29783 >= 5*xabs
5*xabs = 29783
C
w8920
148921 >= 25*xabs
25*xabs = 148921
B
w8921
148928 >= 25*xabs
25*xabs = 148928
C
w8922
148933 >= 25*xabs
25*xabs = 148933
B
w8923
29788 >= 5*xabs
5*xabs = 29788
C
w8924
29789 >= 5*xabs
5*xabs = 29789
B
w8925
148954 >= 25*xabs
25*xabs = 148954
C
w8926
148957 >= 25*xabs
25*xabs = 148957
B

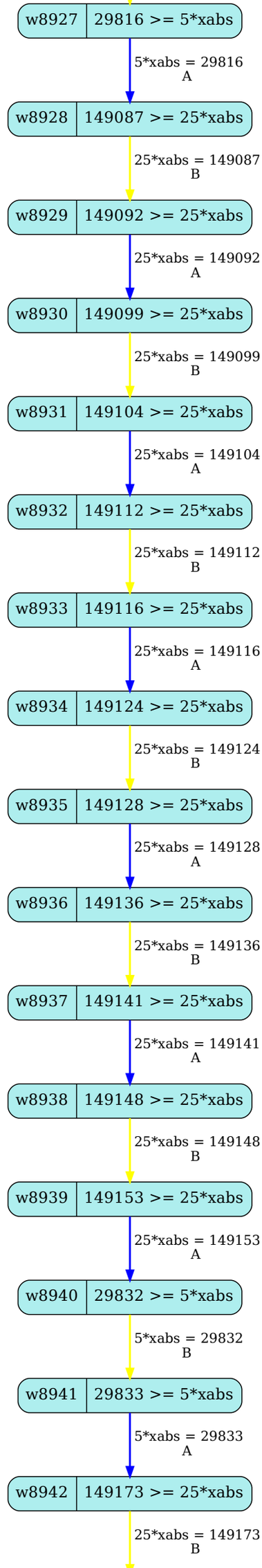
w8927
29816 >= 5*xabs
5*xabs = 29816
A
w8928
149087 >= 25*xabs
25*xabs = 149087
B
w8929
149092 >= 25*xabs
25*xabs = 149092
A
w8930
149099 >= 25*xabs
25*xabs = 149099
B
w8931
149104 >= 25*xabs
25*xabs = 149104
A
w8932
149112 >= 25*xabs
25*xabs = 149112
B
w8933
149116 >= 25*xabs
25*xabs = 149116
A
w8934
149124 >= 25*xabs
25*xabs = 149124
B
w8935
149128 >= 25*xabs
25*xabs = 149128
A
w8936
149136 >= 25*xabs
25*xabs = 149136
B
w8937
149141 >= 25*xabs
25*xabs = 149141
A
w8938
149148 >= 25*xabs
25*xabs = 149148
B
w8939
149153 >= 25*xabs
25*xabs = 149153
A
w8940
29832 >= 5*xabs
5*xabs = 29832
B
w8941
29833 >= 5*xabs
5*xabs = 29833
A
w8942
149173 >= 25*xabs
25*xabs = 149173
B

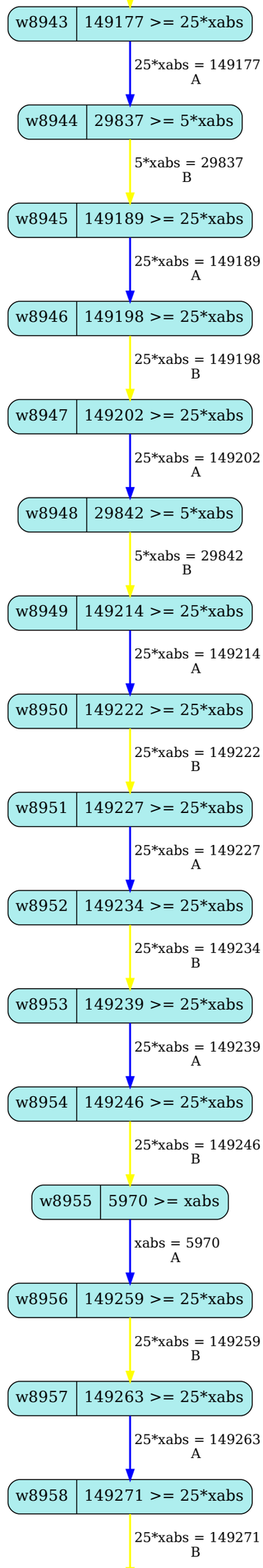
w8943
149177 >= 25*xabs
25*xabs = 149177
A
w8944
29837 >= 5*xabs
5*xabs = 29837
B
w8945
149189 >= 25*xabs
25*xabs = 149189
A
w8946
149198 >= 25*xabs
25*xabs = 149198
B
w8947
149202 >= 25*xabs
25*xabs = 149202
A
w8948
29842 >= 5*xabs
5*xabs = 29842
B
w8949
149214 >= 25*xabs
25*xabs = 149214
A
w8950
149222 >= 25*xabs
25*xabs = 149222
B
w8951
149227 >= 25*xabs
25*xabs = 149227
A
w8952
149234 >= 25*xabs
25*xabs = 149234
B
w8953
149239 >= 25*xabs
25*xabs = 149239
A
w8954
149246 >= 25*xabs
25*xabs = 149246
B
w8955
5970 >= xabs
xabs = 5970
A
w8956
149259 >= 25*xabs
25*xabs = 149259
B
w8957
149263 >= 25*xabs
25*xabs = 149263
A
w8958
149271 >= 25*xabs
25*xabs = 149271
B

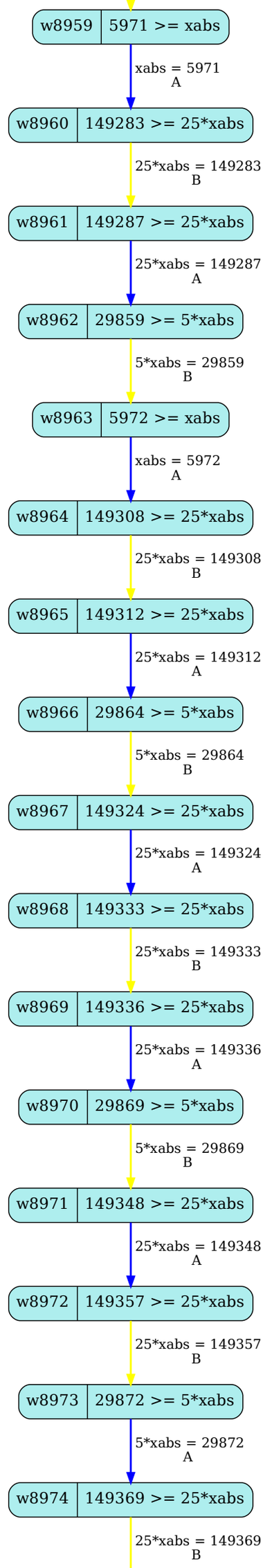
w8959
5971 >= xabs
xabs = 5971
A
w8960
149283 >= 25*xabs
25*xabs = 149283
B
w8961
149287 >= 25*xabs
25*xabs = 149287
A
w8962
29859 >= 5*xabs
5*xabs = 29859
B
w8963
5972 >= xabs
xabs = 5972
A
w8964
149308 >= 25*xabs
25*xabs = 149308
B
w8965
149312 >= 25*xabs
25*xabs = 149312
A
w8966
29864 >= 5*xabs
5*xabs = 29864
B
w8967
149324 >= 25*xabs
25*xabs = 149324
A
w8968
149333 >= 25*xabs
25*xabs = 149333
B
w8969
149336 >= 25*xabs
25*xabs = 149336
A
w8970
29869 >= 5*xabs
5*xabs = 29869
B
w8971
149348 >= 25*xabs
25*xabs = 149348
A
w8972
149357 >= 25*xabs
25*xabs = 149357
B
w8973
29872 >= 5*xabs
5*xabs = 29872
A
w8974
149369 >= 25*xabs
25*xabs = 149369
B

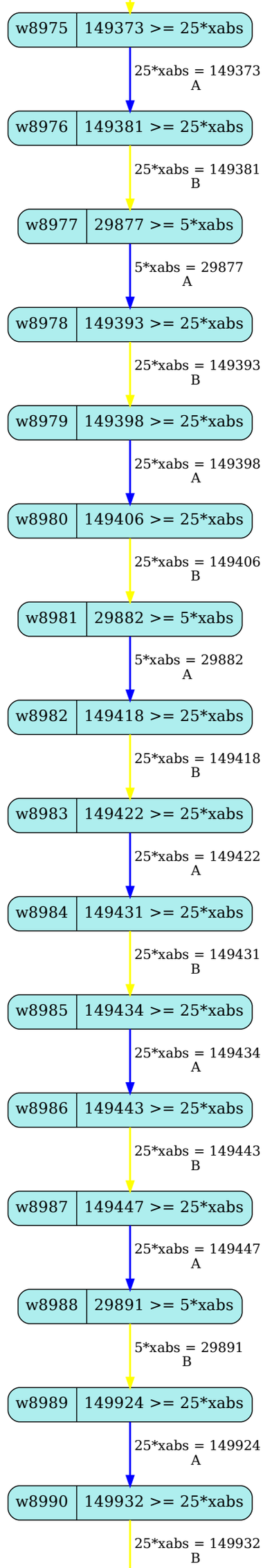
w8975
149373 >= 25*xabs
25*xabs = 149373
A
w8976
149381 >= 25*xabs
25*xabs = 149381
B
w8977
29877 >= 5*xabs
5*xabs = 29877
A
w8978
149393 >= 25*xabs
25*xabs = 149393
B
w8979
149398 >= 25*xabs
25*xabs = 149398
A
w8980
149406 >= 25*xabs
25*xabs = 149406
B
w8981
29882 >= 5*xabs
5*xabs = 29882
A
w8982
149418 >= 25*xabs
25*xabs = 149418
B
w8983
149422 >= 25*xabs
25*xabs = 149422
A
w8984
149431 >= 25*xabs
25*xabs = 149431
B
w8985
149434 >= 25*xabs
25*xabs = 149434
A
w8986
149443 >= 25*xabs
25*xabs = 149443
B
w8987
149447 >= 25*xabs
25*xabs = 149447
A
w8988
29891 >= 5*xabs
5*xabs = 29891
B
w8989
149924 >= 25*xabs
25*xabs = 149924
A
w8990
149932 >= 25*xabs
25*xabs = 149932
B

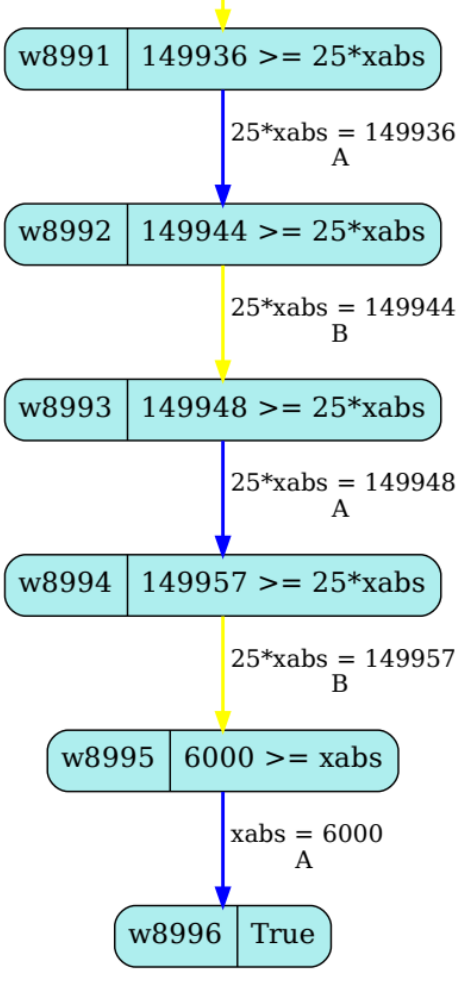
w8991
149936 >= 25*xabs
25*xabs = 149936
A
w8992
149944 >= 25*xabs
25*xabs = 149944
B
w8993
149948 >= 25*xabs
25*xabs = 149948
A
w8994
149957 >= 25*xabs
25*xabs = 149957
B
w8995
6000 >= xabs
xabs = 6000
A
w8996
True